Service Manual

Panasonic MII

Operating Instructions
Feature and Technical Explanation
Maintenance and Mechanical Adjustment Procedures
Electrical Adjustment Procedures
Block Diagrams
Schematic Diagrams
Printed Circuit Board Diagrams
Exploded Views
Replacement Parts Lists

STUDIO VTR
AU-65

STUDIO PLAYER
AU-63

STUDIO PLAYER
AU-62

TIME CODE GENERATOR/READER
AU-F65

50PIN PARALLEL REMOTE CONNECTOR
AU-MK25

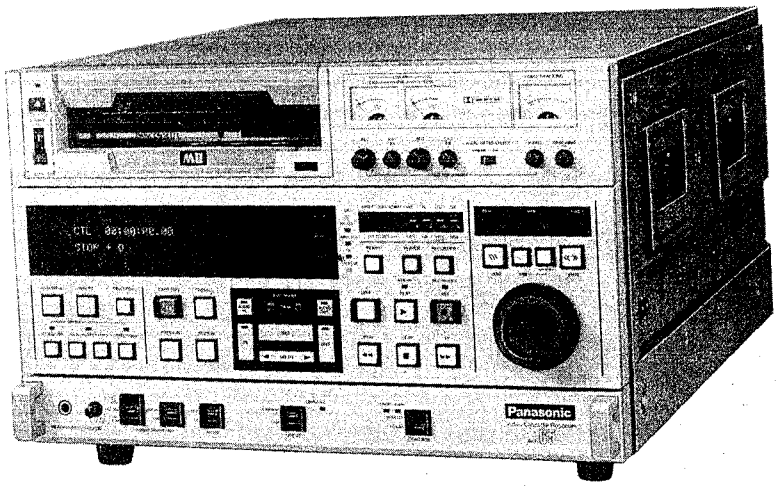

MODEL: AU-65

NTSC/PAL

Revision 1

Panasonic

OPERATING INSTRUCTIONS

This instruction is just an over-view.
Detailed procedures are supplied in the operating instructions for the AU-65, AU-63 and AU-62.

asonic

CONTENTS

Specifications 1
Features 3
Front Panel 5
Rear Panel 8
Front Sub-Panel 10
System Control Board 11
TCG/TCR Board 11
Preset Panel 12
Circuit Boards (Shipment Mode) 12
Operation Method of Dial Menu Function 17
Set-up Menus 18
Servo Reference 21
Colour Framing 22
REC Inhibit Table 24
Control Signals 24
Connector Signals 25
Error Messages 25
Head Cleaning 26
Precaution for Handling Unit 27
Rack Mounting 27

Specifications

		NTSC			PAL		
		AU-65-P	AU-63-P	AU-62-P	AU-65-E/B	AU-63-E/B	AU-62-E/B
General							
Power Supply		120 V AC, 50/60 Hz			100~240 V AC, 50/60 Hz		
Power Consumption		180 W	140 W		180 W	140 W	
Recording/Playback System		MII format, 4 rotary heads, 2-tack helical scanning					
Tape Speed		67.693 mm/sec.			66.295 mm/sec.		
Tape		½-inch metal particle tape					
Recording Time		90 minutes (with AU-M90L tape)			97 minutes (with AU-M90L tape)		
FF/REW Time		Less than 3 minutes (with AU-M60L tape)					
Operating Temperature		41°F to 104°F/5°C to 40°C					
Operating Humidity		35%–80%			Under 80%		
Dimensions (W×H×D)		17½"×11⁷⁄₁₆"×22⁹⁄₁₆"/444×291×574 mm					
Weight		75.3 lbs	75 lbs		34 kg	32 kg	
Video							
Television Format		NTSC: 525 lines, 59.94 fields			PAL: 625 lines, 50 fields		
Y Modulation System		Frequency modulation					
C Modulation System		Time compressed multiplexing (P_B, P_R)					
Bandwidth Component	Y	30 Hz~4.5 MHz +1.0/−4.0 dB			25 Hz~5.5 MHz +1.0/−4.0 dB		
	C (P_B, P_R)	30 Hz~1.5 MHz +0.5/−3.0 dB			25 Hz~2.0 MHz +1.0/−4.0 dB		
S/N Ratio Component	Y	Better than 49 dB (200 kHz~4.2 MHz WIDE BAND)			Better than 46 dB (200 kHz~5 MHz, SC trap OFF)		
	C	Better than 50 dB (AM • PM) (1 kHz~500 kHz)			Better than 48 dB (AM)/50 dB (PM) (1 kHz~500 kHz)		
Y/C Delay		Less than 20 ns					
K Factor		Less than 2%					
Differential Gain		Less than 3%					
Differential Phase		Less than 3%					
Linearity (Component)		Less than 3%					
Audio (Recording only) Linear (CH1/CH2)							
Frequency Response		50 Hz~15 kHz +2.0 dB/−3.0 dB					
S/N Ratio		Better than 56 dB (Dolby NR OFF)					
Distortion		Less than 1% at 1 kHz standard input level					
Cross Talk		Less than −65 dB at 1 kHz standard input level					
Wow and Flutter		Less than 0.15% rms			Less than 0.15% (DIN WTD)		
FM (CH3/CH4)							
Frequency Response		20 Hz~20 kHz +1/−2 dB					
Dynamic Range		More than 80 dB					
Distortion		Less than 0.5% at 1 kHz standard input level					
Cross Talk		Less than −65 dB at 1 kHz standard input level					

		NTSC			PAL		
		AU-65-P	AU-63-P	AU-62-P	AU-65-E/B	AU-63-E/B	AU-62-E/B
Video Input		provided	not provided		provided	not provided	
		Condition: 75% colour bar, 7.5% set up			Condition: 100% colour bars, 0% set up		
VIDEO IN		BNC×2 loop through with 75 ohm ON/OFF switch 1.0 Vp-p±0.3 Vp-p					
REF VIDEO IN		BNC×2 loop through with 75 ohm ON/OFF switch 1.0 Vp-p±0.3 Vp-p					
COMPONENT/YC IN		provided	not provided		provided	not provided	
Component BNC×3	Y	1.0 Vp-p 75 ohm					
	P_B	0.486 Vp-p 75 ohm			0.7 Vp-p 75 ohm		
	P_R	0.486 Vp-p 75 ohm			0.7 Vp-p 75 ohm		
YC 4 pin×1	Y	1.0 Vp-p 75 ohm					
	C	0.286 Vp-p (burst level) 75 ohm			0.3 Vp-p (burst level) 75 ohm		
Video Output		Condition: 75% colour bar, 7.5% set up			Condition: 100% colour bars, 0% set up		
VIDEO OUT BNC×3	Video Out 1	1.0 Vp-p±0.05 Vp-p 75 ohm, sync ON/OFF					
	Video Out 2	1.0 Vp-p±0.05 Vp-p 75 ohm, composite Out					
	Video Out 3	1.0 Vp-p±0.05 Vp-p 75 ohm, T/C superimpose ON/OFF					
COMPONENT OUT BNC×3	Y	1.0 Vp-p 75 ohm					
	P_B	0.486 Vp-p 75 ohm			0.7 Vp-p 75 ohm		
	P_R	0.486 Vp-p 75 ohm			0.7 Vp-p 75 ohm		
YC OUT 4 pin×1	Y	1 Vp-p 75 ohm					
	C	0.286 Vp-p (burst level) 75 ohm			0.3 Vp-p (burst level) 75 ohm		
Audio Input		provided	not provided		provided	not provided	
AUDIO IN XLR×4	CH1/CH2 (Linear)	−20/0/+4 dBm switchable more than 15 kohm, balanced			−20/0/+4 dBu switchable more than 10 kohm, balanced		
	CH3/CH4 (FM)	−20/0/+4 dBm switchable more than 10 kohm, balanced			−20/0/+4 dBu switchable more than 10 kohm, balanced		
TIME CODE IN BNC×1		2.2 Vp-p low impedance, unbalanced					
Audio Output							
AUDIO OUT XLR×4	CH1/CH2 (Linear)	−20/0/+4 dBm switchable low impedance, balanced			−20/0/+4 dBu switchable less than 50 ohm, balanced		
	CH3/CH4 (FM)						
TIME CODE OUT BNC×1		2.2 Vp-p low impedance, unbalanced					
MONITOR OUT XLR×1 (MIX)		0 dBm low impedance, balanced			0 dBu low impedance, balanced		
HEADPHONE OUT ¼″ (63 mm) Stereo Jack		−20 dB~−∞ (variable), 8 ohm			−18 dB~−∞ (variable), 8 ohm		

Features

High quality pictures
The MII series VTR developed for production/broadcast purposes ensures high quality pictures, comparable to those of 1" tape, by using ½" metal tape.

Built-in time base corrector (TBC)
A built-in TBC is utilized to provide stable playback, without the need for an external TBC.

Color framing
This unit's ability to control color framing in 4 field (NTSC) and 8 field (PAL) sequence assures optimum picture quality in composite signal editing, recording and playback. Sub-carrier phase can be adjusted in relation to the input reference signal. CF, REF and INPUT SCH LED indicators are provided to indicate their functions.

Editing functions (AU-65 only)
The unit features auto/manual editing in assemble and insert modes (with two units). Individual/combination editing is possible in VIDEO•FM, AUDIO CH1/CH2, and TIME CODE modes. By installing an optional time code board AU-F65, time code editing can be performed.

Audio split editing (AU-65 only)
It is possible to enter the audio edit point separate from video, and audio edit can be individually performed with its edit point deflected from the video edit point.

Variable memory editing*
(AU-63 and AU-65 combination)
In the variable mode, the operating conditions (tape direction and speed change) within the range extending from normal speed in reverse (−1×) to twice normal speed forward (2×) can be entered and played back.

Setting of editing points (AU-65 only)
Editing points can be readily set by the shuttle, jog and variable functions. Tape travels at speeds ranging from still to +/−16× (setting available to 32×) in the shuttle mode, −1× to +2× in the jog mode, and −1× to +2× in the variable mode.

Auto tracking (AT) (AU-63 only)
The auto tracking mechanism enables noise-free playback pictures to be reproduced across a −1× to +2× slow motion playback range. The edge comb-shaped filter provides slow motion playback with a high resolution.

Tape speed override (TSO)
This function enables the tape speed to be manually adjusted in 1% increments up to 15% faster or slower than the normal playback speed.
Tape speed override is presettable from the internal switch.

Amorphous heads
This unit is equipped with amorphous video heads designed to match the magnetic characteristics of the metal tape used by MII system VTRs. Together, they greatly improve high frequency response and decrease the eddy current loss.

4-channel audio*
The unit's audio is a 4 channel design with two channels of linear audio and two channels of high quality FM sound. Audio Mixing Output connector serves mixed sound of CH1 or CH2 audio and CH3 or CH4 audio.
The Dolby** C Noise Reduction System is provided for the linear channels.

*The same signal is recorded in both the linear audio and FM audio channels. **(AU-65 only)**

Large character display
Information is displayed concerning the status of the VTR such as, tape time, editing data, speed data and error messages.

Shuttle search at up to 32 times normal speed plus jog search
The shuttle mode allows high-speed access at a maximum of 16 times (setting available to 32 times) normal speed in both forward and reverse direction. The jog mode allows speed change from −1× to 2× times normal speed. The operation conditions are displayed in large size characters on the display for enhanced operation convenience.

Machine-to-machine synchronization and sync roll
This unit provides easy synchronization between two VTRs. When used with the optional Editing Controller (AU-A65), this bridge-through connection allows sync roll with simple connections.

*Dolby noise reduction manufactured under license from Dolby Laboratories Licensing Corporation.
**"DOLBY" and the double-D symbol ⊡⊡ are trademarks of Dolby Laboratories Licensing Corporation.

Automatic standard/non-standard selection
This unit automatically detects whether the input signal is RS-170A standard signal or non-standard. **(AU-65 only)**

Tape remaining and lap time indication
Tape remaining and edit duration time are indicated by digit, making it easy to see how much tape remains and to check the duration time of the IN/OUT point.

Encoder remote
The built-in encoder is controllable using the encoder remote connector (15P), provided on the rear panel.

Serial (9P) remote
This unit is equipped with serial (9P) remote interface. When editing with two VTR units, the player can be remotely controlled from the recorder using the serial 9P cable connection.

Parallel (50P) remote
When the optional parallel (50P) remote connector is used, remote control can be performed from a distance by parallel remote mode.

Superimpose
The data in a tape position and the VTR operation mode can be imposed on the television screen.

Component input/output connectors
(Input connector: AU-65 only)
Component input/output connectors are provided for interface with other equipment at the component signal level.

YC input/output connectors
(Input connector: AU-65 only)
YC input/output connectors have been provided to enable interfacing with other components using the YC signals.

Recorder inhibit (AU-65 only)
Individual record inhibits are provided for Video, Linear Audio and Time Code. With the switches ON, both recording and editing are inhibited.

Rack mount
The VTR can be mounted in a standard EIA 19" rack.

Front Panel

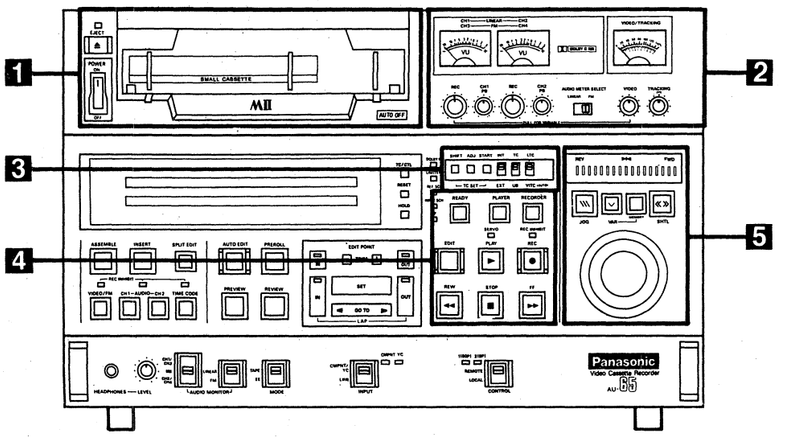

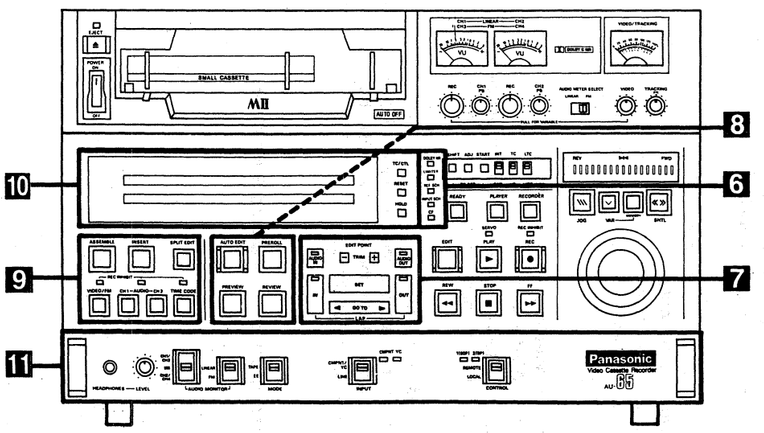

The above illustrations show the AU-65 as seen from the front.

This illustration show the level control section of AU-62.

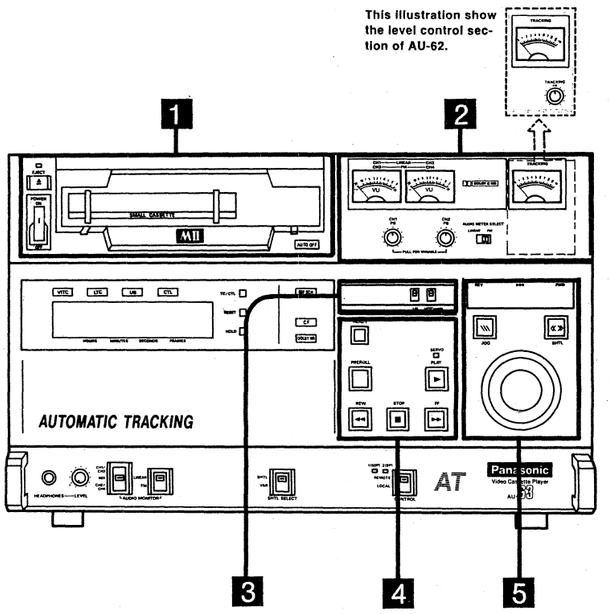

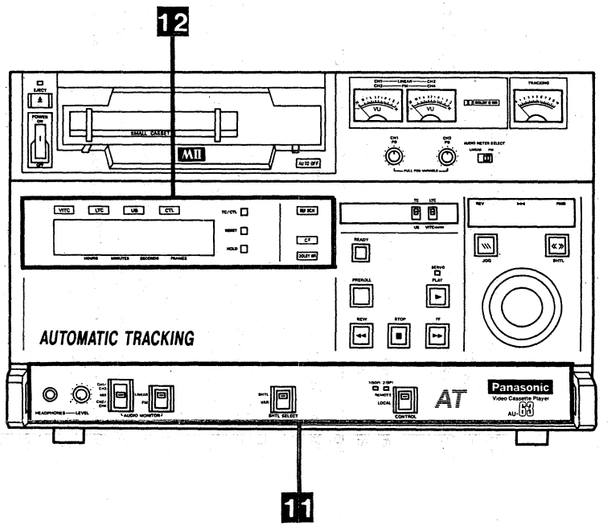

The above illustrations show the AU-63 as seen from the front.

This illustration shows the lower panel of the AU-62.

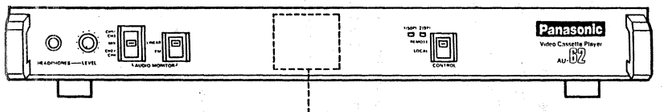

The AU-62 is not provided with the SHTL SELECT switch.

1 Power, cassette area

POWER Switch: This is the power switch.

EJECT Button: Press this to eject the tape.

EJECT Lamp: This lights when a tape is ejected.

Cassette Holder: This is where the 1/2-inch metal particle tape is inserted.

AUTO OFF Lamp: This lights when there is something wrong with the unit. While it is lighted, only the unit's EJECT button among the controls is functional. (See page E-93)

2 Level control area

LINEAR AUDIO (CH1/CH2)/FM AUDIO (CH3/CH4) Meters: These indicate the signal level for linear sound (CH1/2) and FM sound (CH3/CH4).

VIDEO/TRACKING Meter: This indicates the video level or tracking level.

VIDEO Level Control: This adjusts the composite video signal level.

TRACKING Control: This adjusts the tracking.

Audio Level Controls: Pull these out to adjust the audio level. Push them back into place when recording or playing back at the optimum (preset) level.

AUDIO METER SELECT Switch: This switches between the linear audio meter and FM audio meter.

LINEAR: Set to this position for linear sound.

FM: Set to this position for FM sound.

3 Time code setting area

SHIFT Button: This shifts the flashing part of the time code display.

ADJ Button: This changes the value of the flashing part.

START Button: Press this after completing the time code settings.

INT/EXT Switch: During time code recording, this selects whether the recording is to use the AU-F65 (option) or external time code.

TC/UB Switch: This switches between the time code and user bits display. (It works only when the TC/CTL switch has been set to the TC position.)

LTC/VITC (AUTO) Switch:

LTC: The LTCR or LUBR value is displayed.

VITC (AUTO): The VITC or VUBR value is displayed. LTCR is displayed when VITC has not been recorded on tape.

- If the time code cannot be read at either position, interpolation is provided by the CTL signal.

- The controls in the time code setting area function when the optional AU-F65 time code generator/reader board has been installed.

4 Basic control area

READY Button: This is the READY mode ON/OFF button.

PLAYER Button: This is pressed when operating the player, which is remote controlled by this unit, while using 2 VTRs for editing.

RECORDER Button: This is pressed when operating the recorder (this unit) while using 2 VTRs for editing. **(AU-65 only)**

EDIT Button: Editing commences when this is pressed together with the PLAY button. **(AU-65 only)**

PLAY Button: Playback commences when this is pressed.

REC Button: Recording commences when this is pressed together with the PLAY button. **(AU-65 only)**

REW Button: This rewinds the tape at 32 times the normal tape speed.

STOP Button: This shuts down all modes.

FF Button: This fast forwards the tape at 32 times the normal tape speed.

SERVO LOCK Lamp: This lights during servo lock.

REC INHIBIT Lamp: This light in the recording inhibit mode. **(AU-65 only)**

5 Search control area

SEARCH Indicator: This indicates the operating status of the search dial.

JOG Button: This is pressed to establish the JOG mode.

VAR Button: This is pressed to establish the variable mode.

VAR MEMORY Button: This is pressed when conducting a variable memory operation. **(AU-65 only)**

SHTL Button: This is pressed to establish the shuttle mode. **(AU-65 only)**

SEARCH Dial: This changes the search speed.

6 LED display area on AU-65

LIMITER Lamp: This lights when the front sub-panel AUDIO LIMITER switch is ON.

DOLBY NR Lamp: This lights when the DOLBY NR switch is ON.

REF SCH Lamp: This lights when SCH of the reference video signal is within ±60° of the standard signal.

INPUT SCH Lamp: This lights when SCH of the LINE IN video signal is within ±70° of the standard signal.

CF Lamp: This lights in the colour framing mode.

7 Editing point entry area on AU-65

AUDIO IN Button: Use this for entering, checking and correcting AUDIO IN point.

IN Button: Use this for entering, checking and correcting edit IN point.

TRIM +/– Buttons: Use these when correcting an edit point in1-frame unit.

SET Button: Use this for entering an edit point.

GO TO Button: Use this for accessing an edit point.

AUDIO OUT Button: Use this for entering, checking and correcting AUDIO OUT point.

OUT Button: Use this for entering, checking and correcting edit OUT point.

8 Editing control area on AU-65

AUTO EDIT Button: Press this to execute automatic editing.

PREROLL Button: Press this to execute a preroll operation.

PREVIEW Button: Press this to execute a preview operation.

REVIEW Button: Press this to execute a review operation.

9 Editing mode selection area on AU-65

ASSEMBLE Button: Press this to establish the assemble editing mode.

INSERT Button: Press this to establish the insert editing mode.

REC INHIBIT Lamp: This lights in the recording inhibit mode.

Editing Channel Selector Buttons: These select the editing channel.

- **VIDEO/FM:** Video/FM (CH3/4) is selected.
- **AUDIO CH1:** Linear CH1 audio is selected.
- **AUDIO CH2:** Linear CH2 audio is selected.
- **TIME CODE:** Time code is selected.

SPLIT EDIT Button: Press this to establish the audio split editing mode.

10 Display area on AU-65

Display: The tape timer, time code, user bits and error messages appear on this display.

TC/CTL Switch: This selects whether the time code (TC) or control signal (CTL) is to be used in order to read out the tape position.

RESET Button: This resets the CTL value to zero.

HOLD Button: Press this to hold whatever is on the display.

11 Bottom panel area

HEADPHONES Jack (6.3 mm): Connect stereo headphones here.

HEADPHONE LEVEL Control: This controls the headphones volume.

AUDIO MONITOR Controls: These select the sound and channel to be monitored.

- **CH1/3:** For CH1 (or CH3) sound monitoring in both the left (L) and right (R) channels.
- **MIX:** For monitoring CH1 (or CH3) sound in the left (L) channel and CH2 (or CH4) sound in the right (R) channel.
- **CH2/4:** For CH2 (or CH4) sound monitoring in both the left (L) and right (R) channels.
- **LINEAR:** For monitoring linear sound (CH1/2).
- **FM:** For monitoring FM sound (CH3/4).

MODE Switch: This selects the monitoring picture in the stop or recording mode.

- **TAPE:** For monitoring the playback picture. **(AU-65 only)**
- **EE:** For monitoring the EE picture.

INPUT Switch: This selects the input signal.

- **LINE:** For recording the composite signal from the LINE IN connector.
- **CMPNT/YC:** For recording the signal from the component input connector or YC input connector.

CONTROL Switch:

- **REMOTE:** For remote control.
- **LOCAL:** Remote control is completely disabled.

***SHTL SELECT switch:** Selects SHTL button function (AU-63 only).

- **SHTL;** SHTL mode is established when SHTL button is pressed.
- **VAR;** VAR mode is established when SHTL button is pressed.

12 Display section on AU-63/62

Display: Indicates tape timer, time code, user's bit and error messages, etc.

Time code lamps:

- **VITC;** Lights in VITC mode.
- **LTC;** Lights in LTC mode.
- **UB;** Lights in UB mode.
- **CTL;** Lights in CTL mode.

TC/CTL switch: Selects the time code (TC) or control signal (CTL) for reading out the tape position indicated on the display. It also selects the reference signal during editing.

RESET button: When pressed in the CTL mode, the tape timer indicated on the display is reset to zero.

HOLD button: Press to hold the value now indicated on the display. Press it again to select the time code signal and then return to the previous mode.

REF SCH lamp: Lights when the reference video signal SCH is ±60°.

CF lamp: Lights in the colour framing mode.

DOLBY NR lamp: Lights when the Dolby NR system is working.

Rear Panel

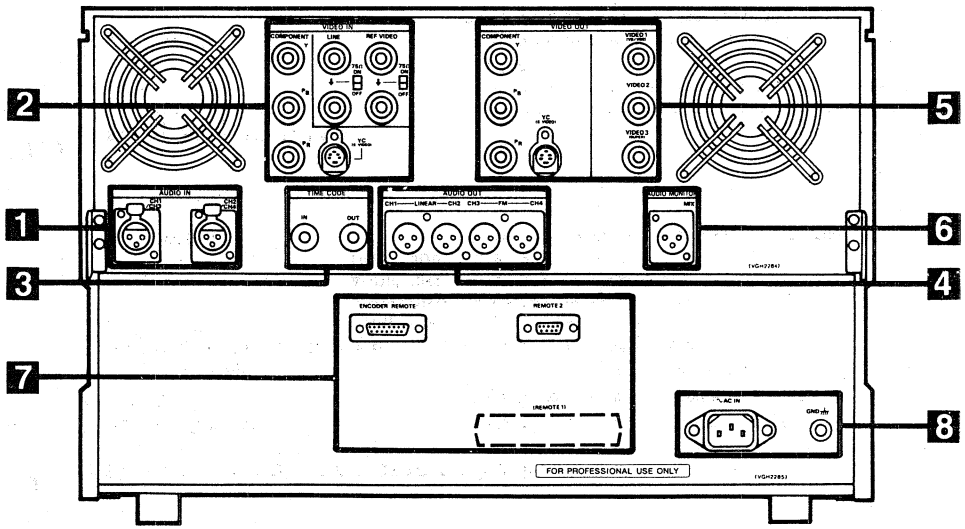

The above illustration shows the AU-65 as seen from the rear.

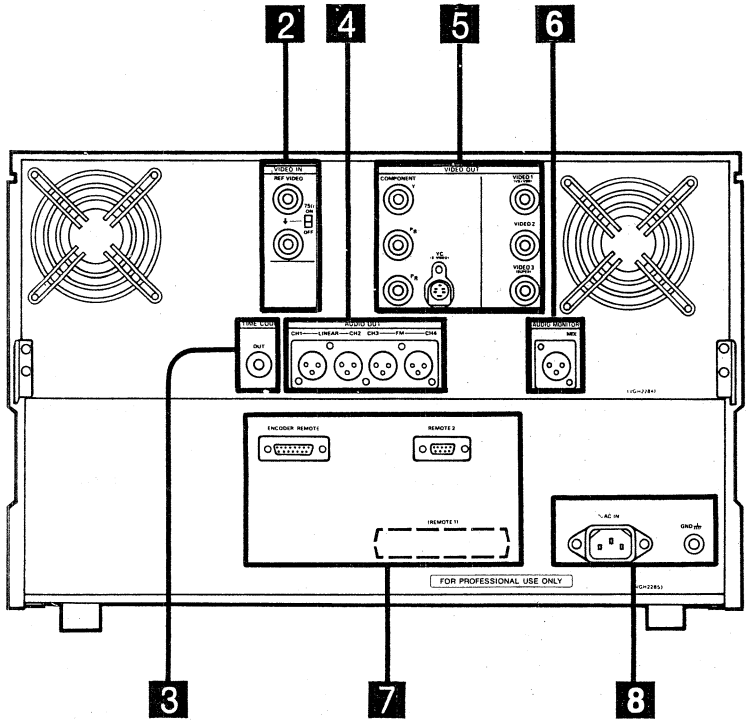

The above illustration shows the AU-62/63 as seen from the rear.

1 AUDIO IN signal area on AU-65

AUDIO CH1/3 Input Connector: This is the CH1/3 audio input connector.

AUDIO CH2/4 Input Connector: This is the CH2/4 audio input connector.

2 VIDEO IN signal area

COMPONENT Connectors: (AU-65 only) The component signals (Y, PB and PR) are supplied separately to these input connectors.

LINE IN Input Connectors: (AU-65 only) The composite video signal is supplied to these input connectors (which come with loop-through 75-ohm terminating switch).

YC Input Connector: (AU-65 only) This is the input connector for the YC (S-VIDEO) signal.

REF VIDEO IN Connectors: The reference signal is supplied to these input connectors (which come with loop-through 75-ohm terminating switch).

3 Time code signal area

TIME CODE Input Connector: (AU-65 only) The time code signal is supplied to this input connector.

TIME CODE Output Connector: The time code signal is output from this output connector.

4 AUDIO OUT signal area

LINEAR AUDIO CH1/CH2 Output Connectors: These are the output connectors for the CH1 and CH2 audio signals.

FM AUDIO CH3/CH4 Output Connectors: These are the output connectors for the CH3 and CH4 audio signals.

5 VIDEO OUT signal area

YC (S-VIDEO) Output Connector: The YC (S-VIDEO) signal is output from this connector.

COMPONENT Output Connectors: The component signals (Y, PB and PR) are output separately from these connectors.

VIDEO 1 Output Connector: The video signal with sync (VBS) or without sync—depending on the position selected by the circuit board (W2 encoder board) switch—is output from this connector.

VIDEO 2 Output Connector: The composite signal is output from this connector.

VIDEO 3 Output Connector: Depending on the setting of the SUPER switch on the B1.SYSTEM CONTROL board, the VTR operating mode, time code or control signal can be superimposed.

6 AUDIO MONITOR signal area

•L, R or MIX sound is output, depending on the setting of the AUDIO MONITOR switch.

AUDIO MONITOR MIX Output Connector: The L, R and MIX sound is output from this connector.

7 Remote signal area

REMOTE 2 (9P) Connector: RS-422A serial remote connector

REMOTE 1 (50P) Connector: Terminal window for using the optional 50-pin parallel remote connector.
Set the front panel CONTROL switch to "REMOTE" and the front sub-panel REMOTE switch to "1".

ENCODER REMOTE Connector: This is used for the remote control of the internal encoder from an external device.

8 Power supply area

AC IN Socket: Use the accessory power cord to connect this socket with the power outlet.

GND Terminal: Be sure to connect this to ground when this unit is connected with another component.

Front Sub-Panel

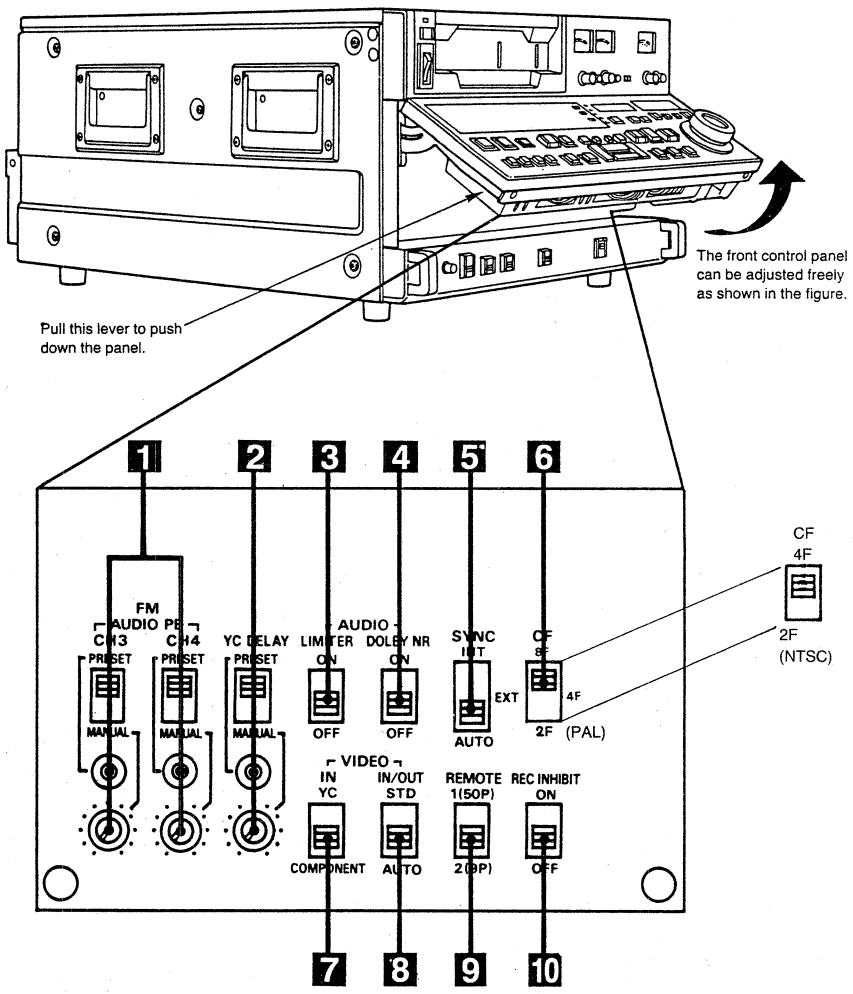

1 **FM AUDIO (CH3/CH4) PB Switches/Controls:**

PRESET: The playback level of the FM sound is set to the preset status.
MANUAL: The playback level of the FM sound can be adjusted as desired.

2 **YC DELAY Switches/Controls:**

PRESET: The YC timing is set to the preset status.
MANUAL: The YC timing can be adjusted as desired.

3 **AUDIO LIMITER Switch:** (AU-65 only)

This works for linear audio signals only.
ON: The volume limiter circuit is activated when the input signal level is excessively high.
OFF: The audio signals are recorded at their original level.

4 **DOLBY NR Switch:**

ON/OFF switch for Dolby C Noise Reduction. (This works only for linear audio signals.)

5 **SYNC Switch:** (AU-65 only)

This selects the servo reference signal.
INT: Synchronizes the servo with the internal reference signal during normal playback.
EXT: Synchronizes the servo with the external reference signal.
AUTO: Synchronizes the servo with the video input signal during recording and editing, and with the external reference signal during playback.

6 **CF Switch:**

This selects the colour framing mode during editing and playback.
8F: For recording, playback and editing in 8-field units. (PAL only)
4F: For recording, playback and editing in 4-field units. VISC control is performed.
2F: For recording, playback and editing in 2-field units.

7 **VIDEO IN Switch:** (AU-65 only)

This selects COMPONENT or YC as the video input signal.
YC: For YC signal input.
COMPONENT: For component signal input.

8 **VIDEO IN/OUT Switch:** (AU-65 only)

STD: For supplying a regular composite signal through the time base corrector (TBC).
AUTO: For automatically identifying whether the signal has passed through the TBC or not.

9 **REMOTE Switch:**

1 (50P): When using an optional REMOTE 1 (50P) connector
2 (9P): When using the REMOTE 2 (9P) connector

10 **REC INHIBIT Switch:** (AU-65 only)

ON: The REC INHIBIT lamp lights to indicate that recording is inhibited.
OFF: Signals can be recorded at this position.

SYSTEM CONTROL Board

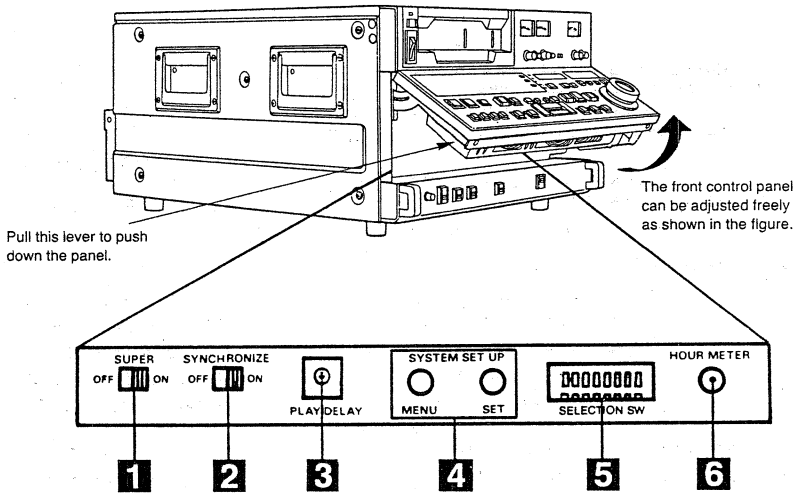

1 **SUPER Switch:**

This is the ON/OFF switch for superimposing time code, status or other character signals onto the signal which is output from the VIDEO 3 connector.

2 **SYNCHRONIZE Switch:**
(AU-65 only)

When this is set to ON, operation will be synchronized when controlling the player in an editing system where this unit is serving as the recorder.

3 **PLAY DELAY Switch:**

This sets the duration (in frame units) of the transition from the stop mode to the play mode. Any value from 0 to 15 can be set.

4 **SYSTEM SET UP Buttons:**

These are used when the unit's set-up is to be changed.

5 **SELECTION SW:**

Not used. (All switches are set to OFF.)

6 **HOUR METER Button:**

When this is pressed, the accumulated values for the "Total power ON time" and "Drum rotation time" appear on the display and on-screen.

Display indication

P00000H D00000H

On-screen display

POWER ON 00000HOURS
DRUM ON 00000HOURS

OPTION USED!

TCG/TCR Board

The time code/user bits operations can be performed when the optional AU-F65 time code generator/reader is installed in the unit.

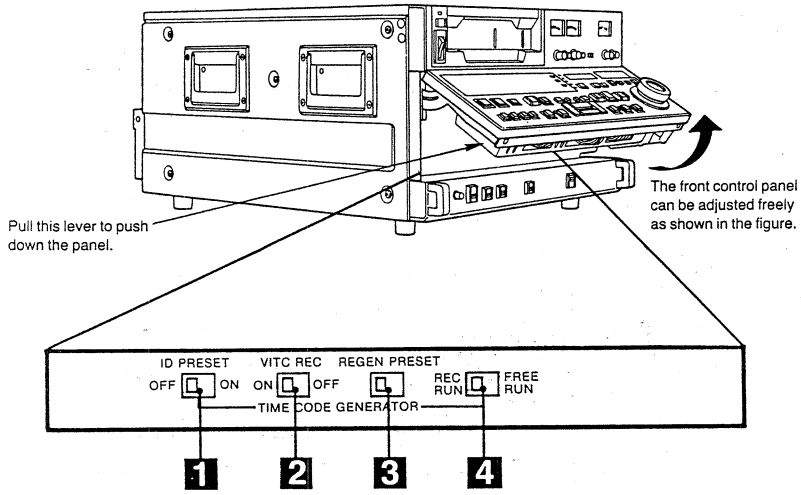

1 **ID PRESET Switch:**

ON: For setting the ID code.
OFF: For setting the normal user bits value.

2 **VITC REC Switch:**

ON: For recording the new VITC value onto tape.
OFF: The new VITC value is not recorded.

3 **REGEN/PRESET Switch:**

REGEN: For synchronizing the internal user bits with the external user bits.
PRESET: For using the internal user bits.

4 **REC RUN/FREE RUN Switch:**

REC RUN: The time code runs only during recording.
FREE RUN: The time code runs in real time, regardless of the operating mode of the VTR.

Preset Panel

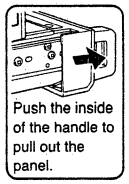

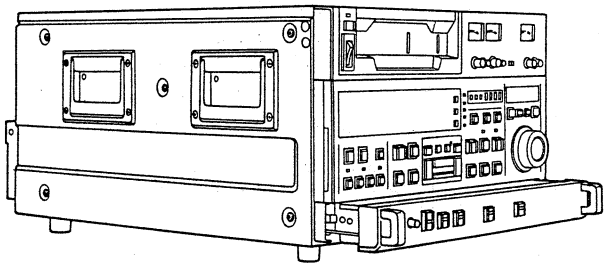

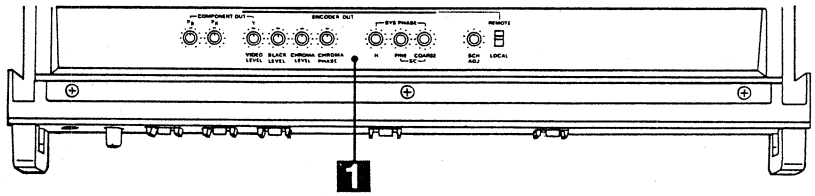

1 ENCODER OUT control area

PB/PR Controls: These adjust the level of the COMPONENT output signals.

VIDEO LEVEL Control: This adjusts the level of all the video signals except the sync and burst.

BLACK LEVEL Control: This adjusts the black level.

CHROMA LEVEL Control: This adjusts the chroma level.

CHROMA PHASE Control: This adjusts the chroma phase.

SYS H PHASE Control: This adjusts the system H phase.

SYS SC Controls: These adjust the system SC phase.

FINE: For the continuous adjustment in a just over 90° range; 360° coverage.

COARSE: For adjustment in 4 steps of 90° each.

SCH ADJ Control: This adjusts the SC phase in relation to the sync signal supplied from the VIDEO output connector.

REMOTE/LOCAL Switch:

REMOTE: For adjusting the encoder from an external unit.

LOCAL: For adjusting the encoder using this unit.
LOCAL is automatically selected even if the REMOTE position has been set if the rear panel ENCODER REMOTE connector has not been connected.

Circuit Boards

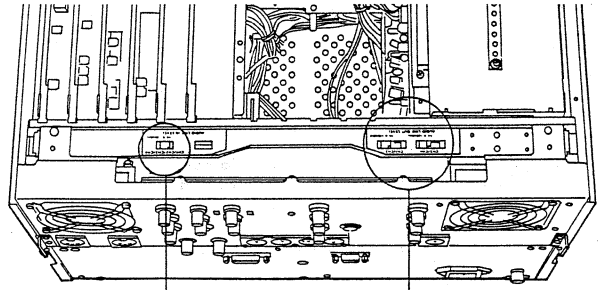

AUDIO LINE IN LEVEL switch (AU-65 only)

AUDIO LINE OUT LEVEL switch

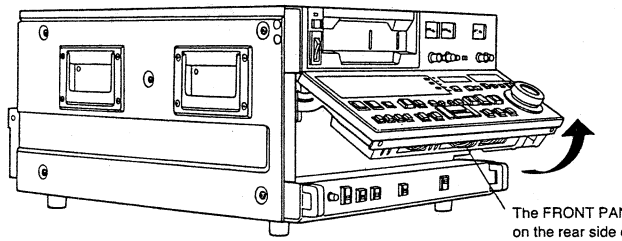

The FRONT PANEL circuit board is on the rear side of the front panel.

CAUTION: TO REDUCE THE RISK OF FIRE OR SHOCK HAZARD, REFER CHANGE OF SWITCH SETTING INSIDE THE UNIT TO AUTHORIZED SERVICE PERSONNEL.

AU-65 (NTSC) only

Circuit board	Abbreviation	Full name	Description	Shipment mode
W1 Board	SW4	V-blanking selector switch	Blanks the video signal during the V-blanking interval (blanking when in ON position). 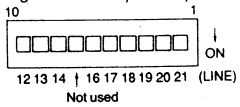 When the unit is used as a player during editing, if the VITC insert line position on the tape differs from the settings of the editor, set these switches ON to blank the VITC insert line.	ALL OFF
	SW7		Factory adjustment switch	ON
	SW201	Frame detection switch	Detects the input video frame. ON: Frame detection always occurs. OFF: Frame detection is inhibited when the input signal is non-standard signal.	ON
	SW203	VIDEO phase switch	Used for video phase adjustment.	6/7/8
W2 Board	SW201	SYNC ON/OFF switch	To select whether a SYNC signal is added to the VIDEO OUT 1 output signal. ON: SYNC signal is added. OFF: SYNC signal is not added.	ON
W3 Board	SW1	VIDEO/SYNC meter selector switch	Selecting VIDEO meter.	VIDEO
	SW201	C CLAMP PULSE selector switch	Used only during pre-check (for factory adjustment).	NOT TEST
	SW202	C REC BPF adjustment switch	Used only for adjustments (factory adjustments).	NOT TEST
	SW301	Y P_B EQ checking switch	For checking Y P_B EQ (for factory adjustments).	ON
	SW302	Y, G • D adjustment switch	Used only for adjustments (factory adjustments).	ON
	SW304	Y super limiter ON/OFF switch	ON/OFF of Y super limiter (for factory adjustments).	ON
	SW701	C P_B EQ checking switch	For checking C P_B EQ (for factory adjustments).	ON
	SW702	C, G • D adjustment switch	Used only for adjustments (factory adjustments).	ON
	SW704	C super limiter ON/OFF switch	ON/OFF of C super limiter (for factory adjustments).	ON
	VR315 VR316	C CH1/CH2 Playback frequency equalizing adjustment volume	Used only for adjustements (factory adjustments)	——
	VR712 VR713	Y CH1/CH2 Playback frequency equalizing adjustment volume	Used only for adjustements (factory adjustments)	——

AU-65 (NTSC) only

Circuit board	Abbreviation	Full name	Description	Shipment mode
W4 Board	SW201	——	NORM: Carrier leak cancel chroma VDL operation ON. ADJ: Carrier leak cancel chroma VDL operation OFF. (For factory adjustments)	NORM
	SW701	——	NORM: Warbling operation ON. ADJ: Warbling operation OFF. (For factory adjustments)	NORM
W5 Board	SW3	AUTO H PHASE switch	Used during editing to prevent skew of the video signal at the edit point. ON: AUTO H PHASE mode is activated. OFF: AUTO H PHASE mode is not activated.	ON
AUDIO I/O Board	SW101	AUDIO LINE IN LEVEL SW	Used to set the audio input levels of CH1 to 4. −20/0/+4 dBm (See Note)	+4 dBm
	SW102	AUDIO LINE OUT LEVEL SW	Used to set the audio output level of CH1/2. −20/0/+4 dBm (See Note)	+4 dBm
	SW302	AUDIO LINE OUT LEVEL SW	Used to set the audio output level of CH3/4. −20/0/+4 dBm (See Note)	+4 dBm
Front Panel	SW1	Preroll Time Select Switch	The preroll time can be selected by setting SW1 in the following manner. SW1: 0 1 2 3 4 5 6 7 8 9 A B C D E F Preroll time (sec.): 0 1 2 3 4 5 6 7 8 9 10 11 12 13 14 15	5 sec.
	SW2-2	"NEGATIVE" Indication Select Switch	Whether to indicate "NEGATIVE" on the front display when the OUT point is entered that precedes the already entered IN point. ON: Indicate "NEGATIVE" on the display. OFF: Non indicate.	OFF
	SW4-1	Remaining Time Indication Select Switch	To select whether to indicate the tape remaining time on the front display. ON: Tape remaining time is indicated when Block 3 in the display is blank. OFF: Tape remaining time is always indicated in Block 3.	OFF
	SW4-2	TSO Select Switch (use for connecting to other VTR)	Selection of TSO depending on the connected VTR. ON: TSO functions exclusively for AU-650 and AU-620. OFF: TSO functions exclusively for AU-60, AU-65, AU-640, AU-650B and AU-660. (±15% max. in each ±1% step)	OFF

AU-63/62 (NTSC) only

PCB	SW no.	Name	Function	Initial setting
W1 PCB TBC & SYNC GEN	SW203	VIDEO phase switch	This adjusts the video phase.	6/7/8
	SW204	V Blanking select switch		ALL OFF
W2 PCB ENCODER	SW201	SYNC ON/OFF switch	The SYNC signal is added to the VIDEO OUT 1 output signal. ON: SYNC signal is added. OFF: SYNC signal is not added.	ON
W3 PCB: DEMOD	SW1	VIDEO/SYNC meter switch	Selects the video meter mode.	VIDEO
W6 PCB: AUDIO I/O	SW102	AUDIO LINE OUT LEVEL switch	This sets the CH1/2 AUDIO output level (+4/0/−20 dBm).	+4 dBm
	SW302	AUDIO LINE OUT LEVEL switch	This sets the CH3/4 AUDIO output level (+4/0/−20 dBm).	+4 dBm
FRONT PANEL PCB	SW1	Preroll time switch	SW1 selects the preroll time.	5 sec.
	SW2-1	Remaining tape display switch	Selects whether the remaining time is to be indicated on the display. ON: Display OFF: No display	OFF
	SW2-2	DF/NDF switch	Selects CTL display drop frame (DF) or non-drop frame (NDF) mode. ON: NDF OFF: DF	OFF
	SW2-3	TSO switch	Select the tape speed override (TSO) according to the machine connected. ON: TSO for AU-650, AU-620 only OFF: TSO for AU-60, AU-65, AU-640, AU-660 only TSO can be varied in 1% increments up to ±15%.	OFF

AU-65 (PAL) only

PCB	SW No.	Switch	Function	Initial setting
W1 PCB TBC & SYNC GEN	SW201	Frame detection switch	Detects the video input frame when there is no TBC. ON: Detection takes place. OFF: Detection is inhibited.	ON
	SW203	VIDEO phase switch	Adjusts the video phase.	9
	SW204 SW205 SW8	V Blanking select switch	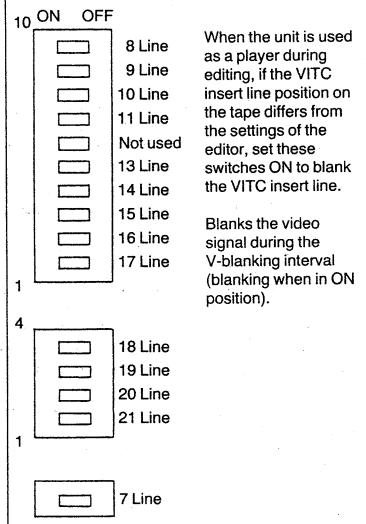 When the unit is used as a player during editing, if the VITC insert line position on the tape differs from the settings of the editor, set these switches ON to blank the VITC insert line. Blanks the video signal during the V-blanking interval (blanking when in ON position).	ALL OFF
W2 PCB ENCODER	SW201	SYNC ON/OFF switch	Adds the SYNC signal to the VIDEO OUT 1 output signal. ON: SYNC signal is added. OFF: SYNC signal is not added.	ON
W3 PCB MOD & DEMOD	SW1	VIDEO/SYNC meter switch	Selects VIDEO meter.	VIDEO
	SW305	AUTO EQ VAR	Makes the automatic equalizer level adjustable when SW306 is ON. ON: Adjustment possible. OFF: Preset position (fixed level)	OFF
	SW306	AUTO EQ SW	Makes the frequency response constant despite variations in burst level (automatic equalizer). ON: The automatic equalizer is activated. OFF: The automatic equalizer is not activated.	OFF
AUDIO I/O PCB	SW101*	AUDIO LINE IN LEVEL switch	Sets the CH1/2/3/4 audio input level. −20/0/+4 dBu	0 dBu
	SW102/ 302	AUDIO LINE OUT LEVEL switch	Sets the CH1/2 (SW102) or CH3/4 (SW302) audio output level. −20/0/+4 dBu	0 dBu

AU-65 (PAL) only

PCB	SW No.	Switch	Function	Initial setting
FRONT PANEL	SW1	Preroll time switch	This selects the preroll time to any value from 0 to 15 seconds.	5 sec.
	SW2-1	Not used	———	OFF
	SW2-2	NEGATIVE display switch	This selects whether "NEGATIVE" is to be indicated on the display when the IN point is equal to, or less than, the OUT point during edit point entry. ON: "NEGATIVE" appears in block 2. OFF: "NEGATIVE" does not appear.	OFF
	SW4-1	Remaining tape display switch	This selects whether the remaining tape is to be indicated on the display. ON: Displayed when block 3 is empty. OFF: Displayed all the time.	OFF
	SW4-2	TSO switch	Selects TSO in accordance with the connected machine. ON: TSO for AU-650, AU-620 only. OFF: TSO for AU-750, AU-650B, AU-65, AU-630, AU-640 only (This can be changed in 1% steps up to ±15%.)	OFF
	SW4-3~4-6	Not used	———	OFF
	SW4-7	Forced EE selector switch	This selects the forced EE mode during tape eject. ON: EE mode is set all the time regardless of the MODE switch position. OFF: Mode corresponds to MODE switch setting.	OFF

AU-63/62 (PAL) only

PCB	SW no.	Name	Function	Initial setting
W1 PCB TBC & SYNC GEN	SW203	VIDEO phase switch	This adjusts the video phase.	9
	SW204	V Blanking select switch	10 8 Line 9 Line 10 Line 11 Line 13 Line 14 Line 15 Line 16 Line 17 Line 1	ALL OFF
	SW205		4 18 Line 19 Line 20 Line 21 Line 1	
	SW8		7 Line	
W2 PCB ENCODER	SW201	SYNC ON/OFF switch	The SYNC signal is added to the VIDEO OUT 1 output signal. ON: SYNC signal is added. OFF: SYNC signal is not added.	ON
W3 PCB: DEMOD	SW1	VIDEO/SYNC meter switch	Selects VIDEO meter mode.	VIDEO
	SW305	AUTO EQ VAR	Makes the automatic equalizer level adjustable when SW306 is ON. ON: Adjustment possible. OFF: Preset position (fixed level)	OFF
	SW306	AUTO EQ SW	Makes the frequency response constant despite variations in burst level (automatic equalizer). ON: The automatic equalizer is activated. OFF: The automatic equalizer is not activated.	OFF

AU-63/62 (PAL) only

PCB	SW no.	Switch	Function	Initial setting
W6 PCB: AUDIO I/O	SW102	AUDIO LINE OUT LEVEL switch	This sets the CH1/2 AUDIO output level (+4/0/−20 dBu).	0 dBu
	SW302	AUDIO LINE OUT LEVEL switch	This sets the CH3/4 AUDIO output level (+4/0/−20 dBu).	0 dBu
FRONT PANEL PCB	SW1	Preroll time switch	SW selects the preroll time.	5 sec.
	SW2-1	Remaining tape display switch	Selects whether the remaining time is to be indicated on the display. ON: Display OFF: No display	OFF
	SW2-2	——	——	OFF
	SW2-3	TSO switch	Select the tape speed override (TSO) according to the machine connected. ON: TSO for AU-650, AU-620 only OFF: TSO for AU-60, AU-65, AU-640, AU-660 only TSO can be varied in 1% increments up to ±15%.	OFF

CAUTION: TO REDUCE THE RISK OF FIRE OR SHOCK HAZARD, REFER CHANGE OF SWITCH SETTING INSIDE THE UNIT TO AUTHORIZED SERVICE PERSONNEL.

The audio output levels set by the AUDIO LINE OUT LEVEL (+4/0/−20 dBu) switches apply when the VU meter pointer shows 0 VU.

Operation Method of Dial Menu Functions

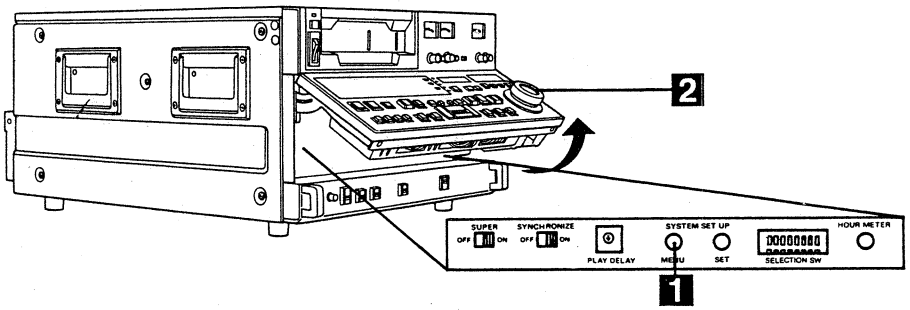

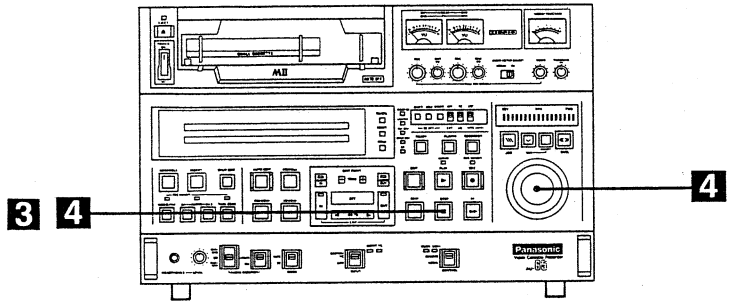

1 Press the MENU button on the B1. SYSTEM CONTROL board.

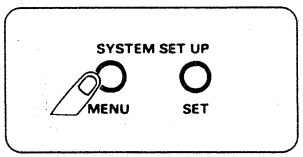

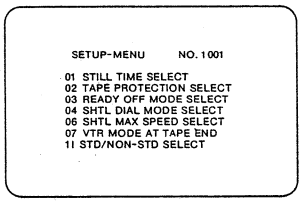

Superimpose display

The picture below appears on the monitor.
(If changes were made previously to the set-up, the screen will show the last such change.)

Display

```
SETUP—MENU
NO. 1001
```

2 Turn the search dial and find the setting item.

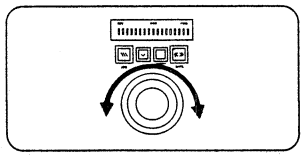

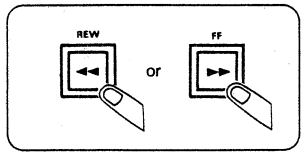

When the dial is rotated clockwise, the setting items are successively incremented (1001→1002→1003, etc.); conversely, when it is rotated counterclockwise, they are decremented.

Press the FF (page up) or REW (pack down) button to change the set-up menu in page units.
The set-up menu changes page by page.

3 Press the STOP button at the desired item.

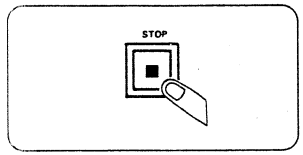

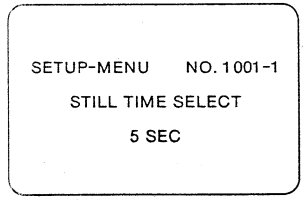

Superimpose display

The set-up display, such as that below, will appear on the screen for as long as the STOP button is held down.

Display

```
SETUP—MENU
NO. 1001—1
```

4 Turn the search dial while holding down the STOP button.

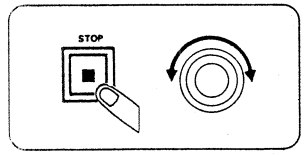

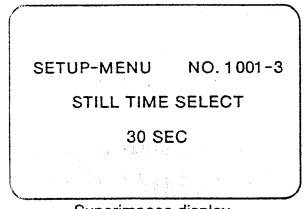

Superimpose display

The flashing display changes. Set to the desired value.

Display

```
SETUP—MENU
NO. 1001—3
```

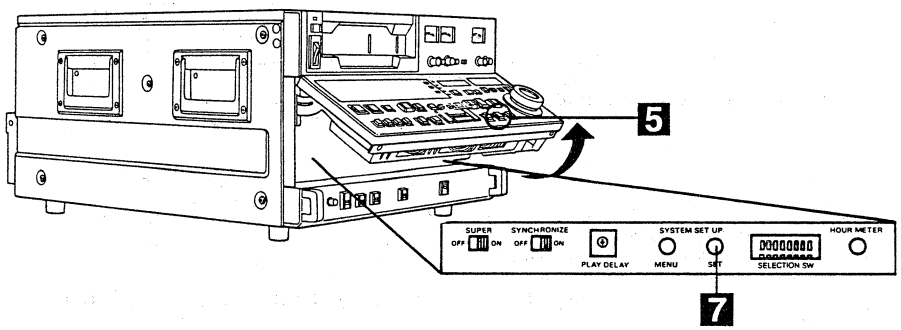

5 Release the STOP button.

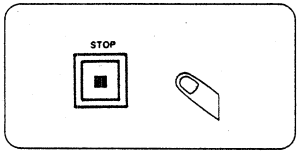

The set-up menu display returns to the screen.

6 Repeat steps 3 to 5.

Set all the set-up items to be changed to the desired values.

7 Press the SET button on the B1. SYSTEM CONTROL board.

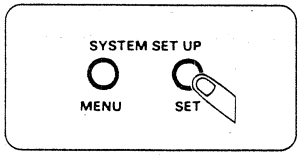

Upon completion of the setting, press the SET button on the B1. SYSTEM CONTROL board.
The set-up changes are stored in the memory.

REFERENCE

- **To terminate operation in the mode without storing the settings in the memory:**
  Press the MENU button on the B1. SYSTEM CONTROL board.
- **To return the set-up to the initial settings (set at the factory):**
  Press the RESET button while the set-up menu is displayed. The following message will now appear.

```
SETUP-MENU    INIT. SET OK?
              (PUSH PLAY KEY)
```

The original settings are restored when the PLAY button is pressed.

Set-up Menus

Operation/function set-up items

[The shading denotes the initial setting.]

Item		Set-up value		Description of function
No.	Superimpose display	No.	Superimpose display	
1001	STILL TIME SELECT	00 01 02 03 04 05 06 07	0.5 SEC 5 SEC 10 SEC 30 SEC 1 MIN 3 MIN 5 MIN 10 MIN	When the unit is left in the STOP or STILL mode, this selects the duration of time after which the unit is automatically placed in the TAPE PROTECTION mode in order to protect the tape.
1002	TAPE PROTECTION SEL	00 01	T. RELEASE READY OFF	This selects the operation in the tape protection mode. 00: Tape tension release 01: Ready OFF mode (in conformity with No.1003)
1003	READY OFF MODE SELECT	00 01 02	DRUM ROTATE DRUM STOP UNLOADING	Selects the operation in the READY OFF mode. 00: Drum rotates. 01: Drum stops rotating. 02: Unloading
1004	SHTL DIAL MODE SELECT	00 01 01	DIRECT SHTL PRESET VAR **(AU-65/63)** **NON-DIRECT** **(AU-62)**	Selects the operation mode for the dial in any mode except shuttle. 00: Direct shuttle mode 01: Preset variable **mode/Non direct (AU-62)**
1006	SHTL MAX SPEED SELECT	00 01	*32 *16	Selects the maximum search speed in the shuttle mode. 00: 32x normal tape speed 01: 16x normal tape speed
1007	VTR MODE AT TAPE END	00 01	STOP AUTO REW	Selects the operation after the tape-end has been detected. 00: Stop 01: Automatic rewinding to start
1011	STD/NON-STD SELECT	00 01	FRONT SWITCH NON-STD	Selects whether to forcibly establish the NSTD mode regardless of the position of the VIDEO IN/OUT switch on the front sub-panel. 00: As per position set by VIDEO IN/OUT switch. 01: NSTD mode is forcibly established.
1012 PAL only	VISC CONTROL SELECT	00 01	CONTROLLED NOT CONTROLLED	This uses VISC to align the subcarrier phase of the input video signal and the subcarrier phase of the encoder video output signal. (It is effective only during normal playback with CF SW 4F or 8F.) 00: VISC control 01: No VISC control

Superimpose set-up items

[The shading denotes the initial setting.]

Item		Set-up value		Description of function
No.	Superimpose display	No.	Superimpose display	
2001	CHARACTER BACKGROUND	00 01	Selection is made while observing superimposed display.	Selects the type of characters for the VIDEO 3 superimpose display. 00: Black display LTCR **:**:**:**. 01: Edge display LTCR **:**:**:**
2002	CHARACTER H-POSITION	00 01 02 03 04 05 06 07	Selection is made while observing superimposed display.	Selects horizontal position for VIDEO 3 superimpose display; moves characters towards right as NO. is increased. 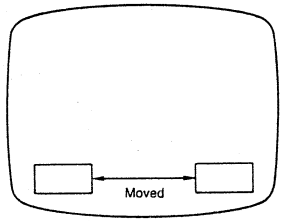
2003	CHARACTER V-POSITION	00 01 02 03 04 05 06 07	Selection is made while observing superimposed display.	Selects vertical position for VIDEO 3 superimpose display; moves characters down as NO. is increased. 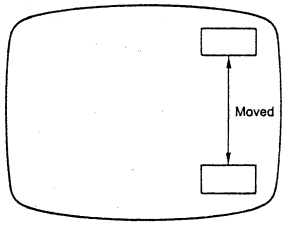
2004	STATUS SUPER	00 01	OFF ON	Selects whether VTR operation mode is to be indicated as a superimposed display of VIDEO 3 output signal.

Remote set-up items

[The shading denotes the initial setting.]

Item		Set-up value		Description of function
No.	Superimpose display	No.	Superimpose display	
3001	REMOTE OPERATION SEL	00 01 02 03	SEPARATE LOCAL+REMOTE BOTH REMOTE ALL OPERATION	Selects connector which can be controlled when REMOTE switch is at REMOTE position. 00: Selected by CONTROL switch 01: Control panel and connector selected 02: REMOTE 1 and REMOTE 2 03: All operations possible
3002	EJECT/STOP FNCTN REM.	00 01	POSSIBLE NOT POSSIBLE	Selects operation of panel EJECT/STOP button in remote mode. 00: Enables operation. 01: Disables operation.
3003	50P STOP STATUS SEL	00 01	FLASHING NOT FLASHING	Selects whether or not to indicate by flashing the STOP status signal which is supplied to 50-pin remote connector in READY-OFF mode. 00: Flashing 01: Not flashing
3004	9P DEVICE TYPE SELECT	00 01 02	OTHER TYPEs 1 OTHER TYPEs 2 M2 ID	Selects ID code returned in response to 9P device type request command when control is exercised using 9-pin remote connector. 00: 1100 (BVU-800) 01: 2125 (SONY 1") 02: MII
3005	VTR ADDRESS	00 01 02 03 04 05 06 07 08 09 10 11 12 13 14 15	A (8880) B (8882) C (8884) D (8886) E (8888) F (888A) G (888C) H (888E) I (88C0) J (88C2) K (88C4) L (88C6) M (88C8) N(88CA) O (88CC) P (88CE)	Sets identification number of each VTR when VTRs are connected to a multi-drop system through an RS-422 (9-pin) serial bus under the control of a special controller. This setting is effective starting from the time when the power is next switched ON.

Editing set-up items

AU-65 only

[The shading denotes the initial setting.]

Item		Set-up value		Description of function
No.	Superimpose display	No.	Superimpose display	
4001	CF ADJUSTMENT SELECT	00 01	TO PLAYER TO RECORDER	Selects the VTR which is to be adjust the entered points for VTR-to-VTR editing. (0 to +3 frame) 00: The points on the player tape are adjusted. 01: The points on the recorder tape are adjusted.
4002	EDIT FIELD SELECT	00 01	ODD EVEN	Selects the start field for editing. 00: Start with odd number field 01: Start with even number field
4003	AUTO PREROLL ENTRY	00 01	NOT ENTERED ENTERED	Selects whether to enter the IN point by pressing the pre-roll button when the IN point has not been entered. 00: Entered 01: Not entered

Colour framing set-up items

[The shading denotes the initial setting.]

Item		Set-up value		Description of function
No.	Superimpose display	No.	Superimpose display	
5004	CF SELECT AT Pb OUT	00 01 02	AUTO OFF ON	Selects whether to add the colour framing ID to the COMPONENT PB OUT connetor signal. 00: Forcibly added when the composite video input signal is recorded in the normal recording or assemble editing mode. Added when CF lamp lights in the playback mode. 01: Not added 02: Added

Time code set-up items

AU-65 only

The optional AU-F65 time code generator/reader is required for these operations.

[The shading denotes the initial setting.]

Item		Setp up value			Description of function
No.	Superimpose display	No.	Superimpose display		
6001	VITC POSITION SEL-1		NTSC (Line)	PAL (Line)	Selects VITC signal insertion line. *Same line as No. 6001 cannot be selected. Shipment mode: NTSC: 16 Line PAL: 11 Line
		00	12	8	
		01	13	9	
		02	14	10	
		03	16	11	
		04	17	13	
		05	18	14	
		06	19	15	
		07	20	16	
		08	21	17	
		09	——	18	
		10	——	19	
		11	——	20	
6002	VITC POSITION SEL-2	00	12	8	Selects VITC signal insertion line. *Same line as No. 6001 cannot be selected. Shipment mode: NTSC: 16 Line PAL: 13 Line
		01	13	9	
		02	14	10	
		03	16	11	
		04	17	13	
		05	18	14	
		06	19	15	
		07	20	16	
		08	21	17	
		09	——	18	
		10	——	19	
		11	——	20	
		12	——	21	
6003	TCG REGEN MODE	00	TC+UB		Selects regeneration signal when TCG is in REGEN mode. 00: Regenerated for time code and user bits. 01: Regenerated for time code only. 02: Regenerated for user bits only.
		01	TC		
		02	UB		
6004	REGEN AUTO MODE	00	ASSEM+INSERT		Selects whether time code is to be regenerated in VTR-to-VTR editing. 00: Regenerated for assemble and insert editing. 01: Regenerated for assemble editing. 02: Regenerated for insert editing. 03: Conforms to time code board setting.
		01	ASSEM		
		02	INSERT		
		03	TC SWITCH		
6005	TCG REFERENCE	00	AUTO		Selects reference signal for time code generator. 00: Automatically selected under same condition as servo reference. 01: Reference video signal serves as reference.
		01	REF		

Servo Reference

Time code set-up items

The optional AU-F65 time code generator/reader is required for these operations.

[The shading denotes the initial setting.]

Item		Set-up value		Description of function
No.	Superimpose display	No.	Superimpose display	
6006	TC OUT SIGNAL REGEN	00	OFF TAPE	Selects waveform which is output from TIME CODE OUT connector in internal regeneration mode. 00: Outputs playback signals in their original form. 01: Regenerates and outputs playback signals only in servo lock mode.
		01	REGEN	
6007 **AU-65 only**	UB BINARY GROUP FLAG	00	NOT SPECIFIED	Selects mode for using user bits generated by TCG. 00: No character set assigned. 01: 8-bit character set conforming to ISO646, ISO2022. 10/11: Not defined
		01	ISO CHARAC-TER	
		10	UNASSIGNED 1	
		11	UNASSIGNED 2	
6008 **AU-65 only**	UB REAL TIME	00	OFF	Sets the real time mode for the user bits. 00: No setting 01: Setting for LTC UB only 02: Setting for VITC UB only 03: Setting for both LTC UB and VITC UB
		01	LTC UB	
		02	VITC UB	
		03	BOTH	
6009	WAKEUP SELECTION	00	TC	Selects the time data display when power is ON. 00: TC display 01: CTL display
		01	CTL	
6010	TCG CF FLAG	00	OFF	Selects whether CF flag of time code generator is to be set ON. 00: CF flag not set 01: CF flag is set, and time code generator is locked to CF of video signal during recording.
		01	ON	

As the servo reference signal, this unit automatically selects the input video signal which corresponds to the INPUT switch setting, the REF VIDEO signal which is supplied from the REF VIDEO input connector or the internal sync signal (INT).
The relationship between the unit's modes and SYNC switch positions is shown below.

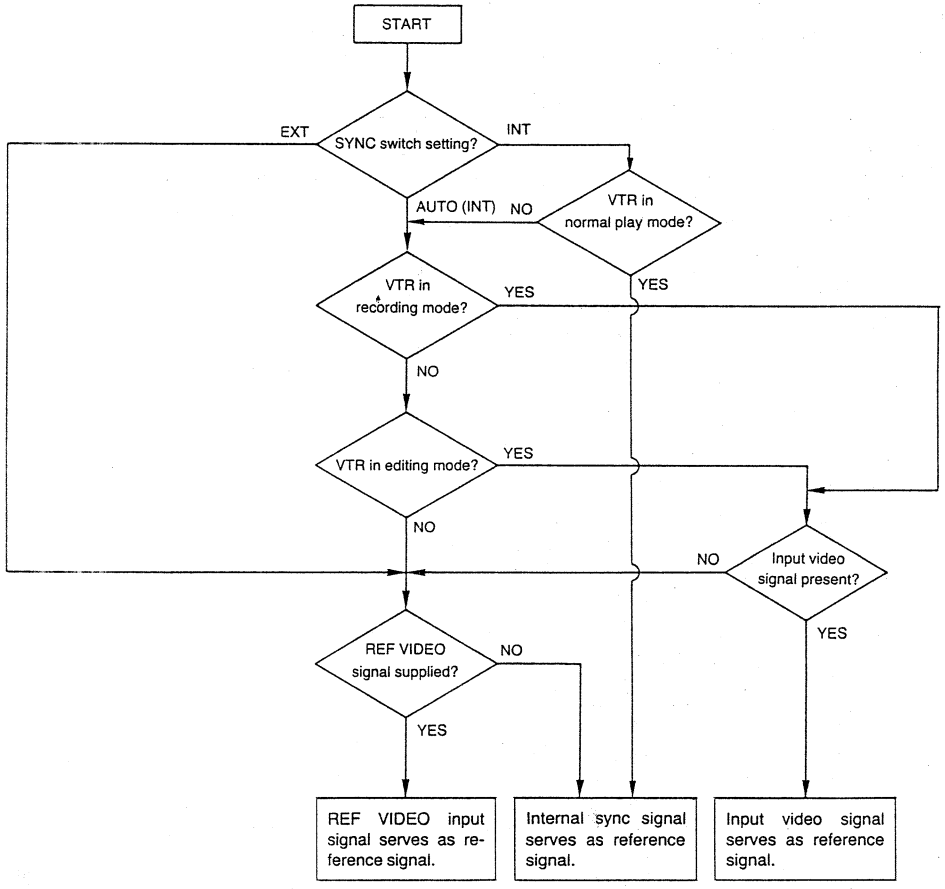

Servo Reference (cont.)

The TBC must supply the reference signal from an external source under normal circumstances.

•Table of servo reference settings

As shown in the table below, the servo reference signal selected depends on the SYNC switch position, the operation mode of the VTR and whether an input signal is available.

SYNC SW		AUTO				EXT				INT			
VTR MODE		REC		PLAY		REC		PLAY		REC		PLAY	
INPUT VIDEO	INPUT REF	EDIT	NOR-MAL	EDIT	NOR-MAL	EDIT	NOR-MAL	EDIT	NOR-MAL	EDIT	NOR-MAL	EDIT	NOR-MAL
YES	YES	VIDEO		VIDEO	REF	＊REF				VIDEO		VIDEO	INT
YES	NO	VIDEO		VIDEO	INT	INT				VIDEO		VIDEO	INT
NO	YES	REF		REF	REF	REF				REF		REF	INT
NO	NO	INT		INT	INT	INT				INT		INT	INT

＊: The input video signal and REF signal must be synchronized.
This mode is useful if the sync signal on the video is not reliable.

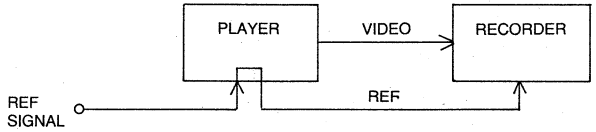

Colour Framing

In an editing system, colour framing serves to synchronize the playback signals perfectly so as to safeguard against picture jumping and phase errors.

1 Colour framing by the LINE and COMPONENT inputs (for recording)

NOTES:

Connect a standard signal to the REF VIDEO and COMPONENT input connectors.
Check that the COMPONENT input PB signal is provided with the CF flag.

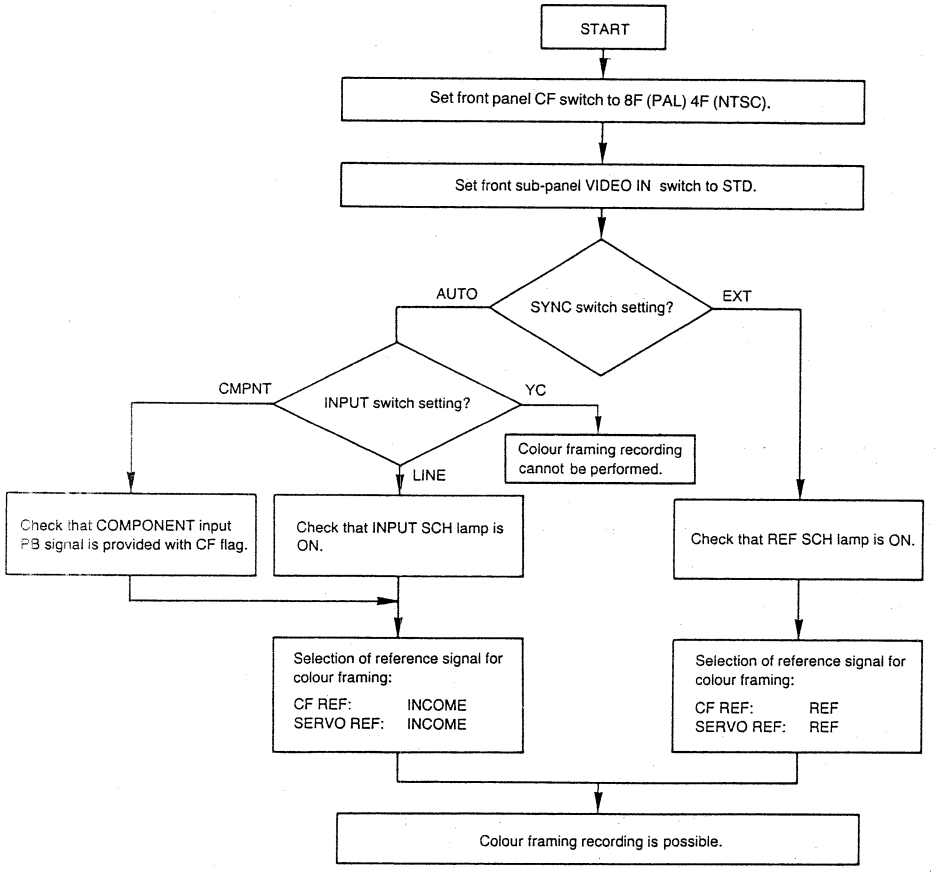

Colour Framing (cont.)

2 Colour framing using EXT TC (for recording)

NOTES:

Connect a component signal without the CF flag.
Connect a time code generator to the EXT TC input.

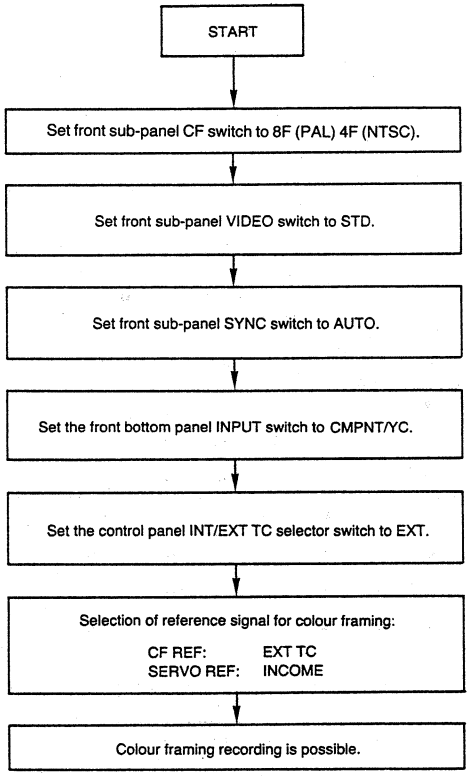

3 Colour framing during playback

NOTE:

Play back a tape which was recorded in the colour framing mode.

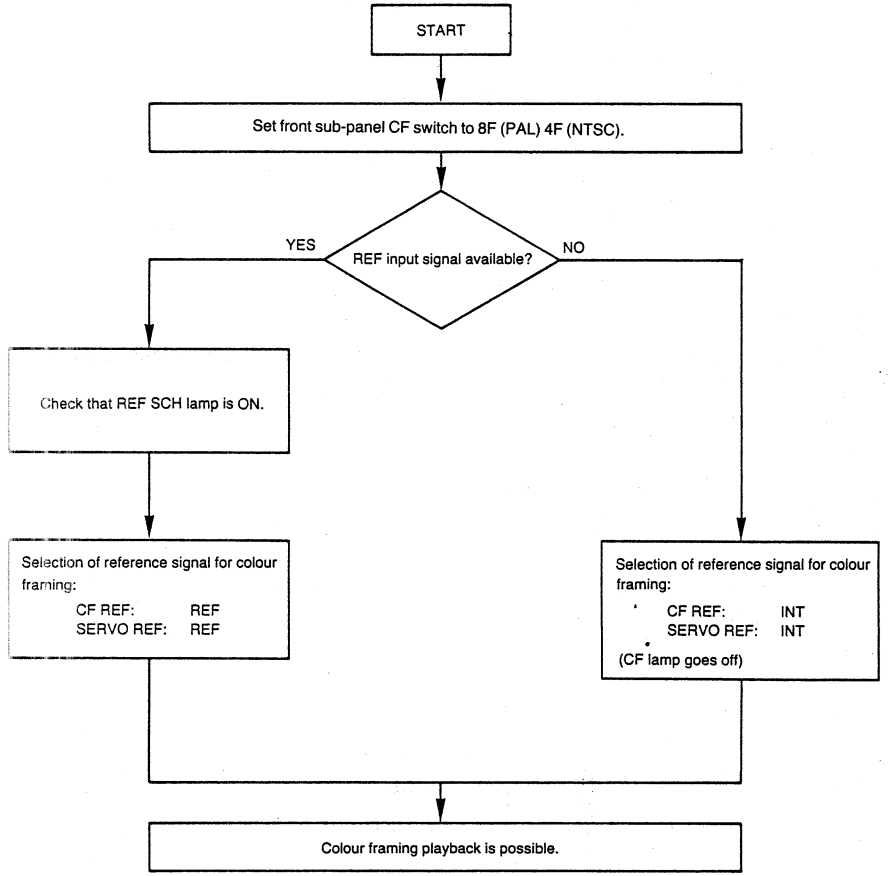

REC INHIBIT Table

1 REC INHIBIT Table

Safety tab (slide switch on cassette) position	REC INH switch (switch on back of front panel) position	REC PLAY operation	EDIT operation		Front panel REC INH lamp				Front mode lamp				
			ASSM	INS	REC	V	A	TC	ASSM	INS	V	A	TC
OPEN *1	——	No	No	No	○	○	○	○	■	■	■	■	■
——	ON	No	No	No	○	○	○	○	■	■	■	■	■
CLOSED	OFF	Yes	Yes	Yes	●	●	●	●	□	□	□	□	□
		Yes	Yes	Yes	●	●	●	○	□	□	□	□	■
		Yes	Yes	Yes	●	●	○	●	□	□	□	■	□
		Yes	Yes	Yes	●	●	○	○	□	□	□	■	■
		Yes	No	Yes	●	○	●	●	■	□	■	□	□
		Yes	No	Yes	●	○	●	○	■	□	■	□	■
		Yes	No	Yes	●	○	○	●	■	□	■	■	□
		Yes	No	Yes	●	○	○	○	■	□	■	■	■

○: When REC INHIBIT lamp is ON
□: Can be selected
●: When REC INHIBIT lamp is OFF
■: Cannot be selected
*1: Valid only when cassette is in "down" position.

Connector Signals

Main connectors

Connector	Connector No.
YC IN	VJS2579
YC OUT	VJS2579
AUDIO IN	VJS1920
AUDIO OUT	VJS1894
REMOTE 2	VJS1887
ENCODER REMOTE	VJS1888

YC Input/Output connector

Pin No.	Connector Signal
1	Y GND
2	C GND
3	Y signal input/output
4	C signal input/output

AUDIO Input/Output connector (XLR-3P)

Pin No.	Connector Signal
1	GND
2	HOT
3	COLD

REMOTE 2 connector (9P)

Pin No.	Connector Signal
1	GND
2	RECEIVE A
3	TRANSMIT B
4	TRANSMIT COMMON
5	SPARE
6	RECEIVE COMMON
7	RECEIVE B
8	TRANSMIT A
9	GND

TRANSMIT and RECEIVE pins are reversed when controlled from another VTR.

ENCODER REMOTE CONNECTOR (15P)

Pin No.	Connector Signal
1	——
2	BLACK LEVEL
3	CHROMA LEVEL
4	GND
5	+12 V
6	SYSTEM H ø
7	SYS. SC COARSE (2)
8	−12 V
9	CHROMA PHASE
10	VIDEO LEVEL
11	RET GND
12	——
13	——
14	SYS. SC FINE
15	SYS. SC COARSE (1)

Connector Signals (cont.)

Optional REMOTE 1 connector (50P) AU-MK25

Pin No.	Connector Signal	Pin No.	Connector Signal
1	REC COMMAND	26	+12 V
2	PLAY COMMAND	27	REC STATUS
3	FF COMMAND	28	PLAY STATUS
4	REW COMMAND	29	FF STATUS
5	STOP COMMAND	30	REW STATUS
6	PAUSE COMMAND	31	STOP STATUS
7	CUT IN COMMNAND	32	PAUSE STATUS
8	CUT OUT COMMAND	33	CUT IN STATUS
9	AUDIO CH1 COMMAND	34	SERVO LOCK STATUS
10	AUDIO CH2 COMMAND	35	AUDIO CH1 STATUS
11	VIDEO COMMNAD	36	AUDIO CH2 STATUS
12	TIME CODE DUB COMMAND	37	VIDEO STATUS
13	SHTL COMMAND	38	TIME CODE DUB STATUS
14	JOG COMMAND	39	SHTL STATUS
15	PREROLL COMMAND	40	JOG STATUS
16	EDIT COMMAND	41	READY ON/OFF STATUS
17	SEARCH 0	42	REMOTE
18	SEARCH 1	43	FWD
19	SEARCH 2	44	CTL SIGNAL
20	READY ON/OFF COMMAND	45	CTL GND
21	——	46	CAPSTAN OVERRIDE
22	FWD/REV COMMAND	47	GND
23	EJECT COMMAND	48	JOG CONTROL SIGNAL
24	UNTHREAD STATUS	49	JOG CONTROL GND
25	LOCAL ENABLE COMMAND	50	GND

Fig. 1

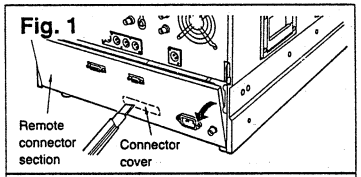

Fig. 2

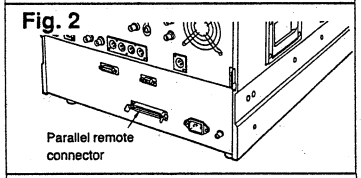

Fig. 3

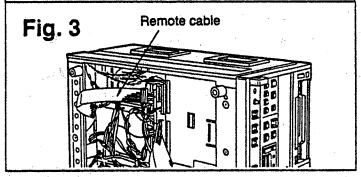

Attaching the REMOTE 1 connector

1. Detach the remote connector section and remove the connector cover. (See Fig. 1.)
2. Attach the optional AU-MK25 REMOTE 1 connector. (See Fig. 2)
3. Use the accessory remote cable to connect the REMOTE 1 connector as shown in the figure. (See Fig. 3)
4. Attach the remote connector section.

CAUTION: TO REDUCE THE RISK OF FIRE OR SHOCK HAZARD, REFER MOUNTING OF THE OPTIONAL CONNECTOR TO AUTHORIZED SERVICE PERSONNEL.

Error Messages

AU-65 only

Display	Description	VTR operation
SERVO NOT LOCKED	Flashes during the PLAY, REC PLAY or EDIT PLAY mode when the servo system has been disengaged for 3 or more seconds.	Continues operation
LOW-RF	Flashes when a dropout has been detected for 2 or more seconds while the PLAY lamp is ON and the tape is traveling at 1× speed.	Continues operation
DRUM MOTOR	Alarm sounds and message flashes when drum lock status continues for 5 or more seconds.	Stops
REEL MOTOR	Alarm sounds and message flashes when, in capstan mode, take-up reel does not rotate while the tape is advanced by about 10 cm.	Stops
FRONT LOAD MOTOR	VTR mode is transferred to eject if cassette does not assume "down" position even when 5 seconds have elapsed after cassette was inserted.	Ejects cassette
	Alarm sounds and message flashes when cassette does not assume "up" position when VTR is transferred to eject mode and 5 seconds have elapsed after cassette was inserted.	Stops
LOADING MOTOR	VTR mode is transferred to unloading when loading operation is not completed within 10 seconds.	Unloads tape
	Alarm sounds and message flashes when unloading operation is not completed within 10 seconds.	Stops
PHOTO TRANSISTOR	Alarm sounds and message flashes when sensor LED has failed.	Stops
DEW	Alarm sounds and message flashes when condensation has formed.	* Ejects tape
TAPE SLACK	Alarm sounds and message flashes when tape is slack.	Stops
REEL DRIVE ERROR	Alarm sounds and message flashes when actual tape advance direction differs from system control command by 5 or more seconds.	Stops
DC OO V TROUBLE	Alarm sounds and message flashes when there is something wrong with the power supply or related parts.	Stops
FAN STOP	Alarm sounds and message flashes when fan inside power supply box stops operating.	Continues operation
FG TROUBLE	Alarm sounds and message flashes when there is something wrong with reel travel during high-speed search.	Stops
NEGATIVE	Flashes when front panel DIP SW2-2 is ON if IN point is equal to or greater than OUT point during edit point entry.	——

*When condensation has formed, the drum continues to rotate so that the condensation will dry out. Once it has been removed, the AUTO OFF lamp and error display go off, and the VTR can be used again.

AU-63/62 only

Contact your authorized dealer if any of the error messages listed below should appear on the display.

Display	Description	VTR operation
E-00	Display flashes during playback when servo disturbances continue for 3 or more seconds.	Operation continues.
E-01	Display flashes when dropouts have been detected for more than 2 sec. during 1× tape speed while PLAY lamp is lighted.	Operation continues.
E-10	Alarm sounds and display flashes when drum lock continues for 5 or more sec.	Operation stops.
E-11	Alarm sounds and display flashes when take-up reel does not rotate while tape is fed for about 10 cm.	Operation stops.
E-14	Alarm sounds and display flashes when cassette is not lowered into position even when 5 seconds have elapsed after the cassette was inserted.	Tape is ejected.
	Alarm sounds and display flashes when cassette is not raised and ejected even when the eject mode is established and 5 seconds have elapsed.	Operation stops.
E-15	Alarm sounds and display flashes when loading is not completed within 10 sec.	Tape is ejected.
	Alarm sounds and display flashes when unloading is not completed within 10 sec.	Operation stops.
E-16	Alarm sounds and display flashes when sensor LED is disconnected.	Operation stops.
E-17	Alarm sounds and display flashes when condensation has formed.	(*)Tape is ejected.
E-18	Alarm sounds and display flashes when tape is slack.	Operation stops.
E-19	Alarm sounds and display flashes when the system control instruction and actual tape feed direction differ for more than 5 sec.	Operation stops.
E-1C E-21 ~ E-26	Alarm sounds and display flashes when a failure or malfunction arises in the power supply section.	Operation stops.
E-1F	Alarm sounds and display flashes when the fan inside the power supply box stops operating.	Operation continues.
E-20	Alarm sounds and display flashes when a failure or malfunction occurs to the reel transport during high-speed search.	Operation stops

When condensation has formed, the drum rotates in order to remove the condensation.
When the condensation is removed, the AUTO OFF lamp goes off, the error display is cleared, and the VTR can be operated again.

Head Cleaning

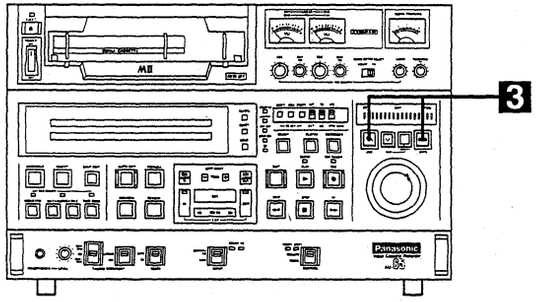

1 Set the VTR to the stop mode.

2 Remove the cassette tape.

3 Press the JOG and SHTL buttons together.

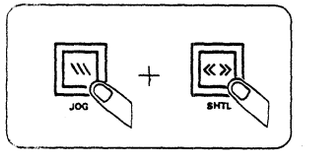

The loading post moves in order to facilitate head cleaning.

4 Proceed with head cleaning.

Handle the parts with the utmost care. For further details, contact your dealer.

5 Upon completion of the work, perform one of the following operations.

1) **Set the POWER switch to OFF and then back to ON.**
2) **Press the EJECT button.**
3) **Insert a cassette tape.**

6 This completes the head cleaning process.

Precaution for handling unit

Precaution for handling unit

- **Vibration**
  Avoid using the unit in a location which is susceptible to vibration.
- **Magnetism**
  Do not bring the unit near any source of magnetism or use it near any product which generates a strong magnetic field.
- **Temperature**
  Under no circumstances should be unit be used in extremely hot or cold location or where it will be exposed to direct sunlight since its performance may deteriorate as a result.
  Operating temperature: +5°C to+40°C/41°F to 104°F.
  (The blower area at the back with the ventilation holes should be never be blocked or covered since the blower functions to keep the temperature inside the unit from rising.)
- **Humidity**
  This unit dose not take kindly to humidity. Avoid using it or where it may be exposed to rain.
- **Re-location**
  - When moving the unit from place to place, eject the cassette tape first.
  - When disconnecting the power cord, be sure take hold of the power plug and unplug it from the power outlet.

Installation

Bear in mind the details below on the operating environment and installation space, and operational and servicing.
Use the unit on a flat and horizontal surface.

- In order to minimize trouble, do not place objects on top on the unit.
- If the unit is to be mounted on a stand, use a stand which is sturdy.
- Leave a clearance of at least 40 cm from a wall or other surface behind the unit so as to allow for ventilation and servicing.
- If the unit is to be used on a desk or other such surface, leave a clearance of at least 20 cm above the unit to as to allow for the servicing of the circuit boards. Such a clearance is not required for rack-mounting since the unit is pulled out for circuit board maintenance.

Maintenance

- Before proceeding with maintenance, set the power switch to the OFF position, and be sure to take hold of the power plug to disconnect it from the power outlet.
- Use a soft cloth to clean the cabinet. To remove stains or stubborn dirt, wipe the unit with a dry cloth.
- Never use paint thinners or benzine.

Storage

- Do not store the unit in an extremely hot or cold location.
- The unit should never be left outdoors.
- If the unit will not be used for a prolonged period of time, set its power switch to the OFF position, and be sure to take hold of the power plug and disconnect it from the power outlet. This will help prevent accidents.
- If a cassette tape is the unit, be sure to eject it.

Rack Mounting

Using the optional AU-M60 rack-mounting adaptors, the unit can be housed in a standard IEC 48.2 cm rack. For the mounting rails, either the rails and bracket unit (part no. CC3001-99-0191) made by Chassis Trak or the rails (part no. C-2038-1215) and brackets (part no. BK-2308) made by Accuride are recommended. Consult with your dealer for further details.

1 Remove the 6 screws each at the left and right sides of the main unit.

2 Attach the inner members

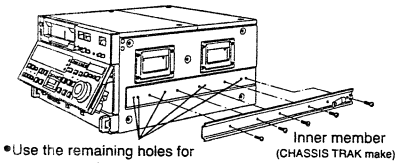

•Use the remaining holes for Accuride.

Attach the inner members of the slide rails using the screws which have just been removed.
There is a limit to the length of the screws used. If any of the mounting screws have been lost or misplaced, use screws (M4x10) with a length of not more than 10 mm.
Screw down the inner members in 4 or more places.

3 Remove the 4 rubber feet on the unit's bottom panel.

4 Attach the outer member brackets to the rack.

Check that the height at the left and right is the same.

5 Attach the optional AU-M60 rack-mounting adaptors.

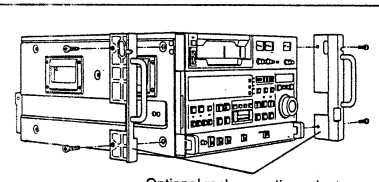

6 Check that the unit slides properly in and out.

Mount the unit in the rack, and check that it slides smoothly on the rails.

❶ LOCATION OF TEST POINTS & CONTROLS (B1, AU-F65)

P.C. Board Location

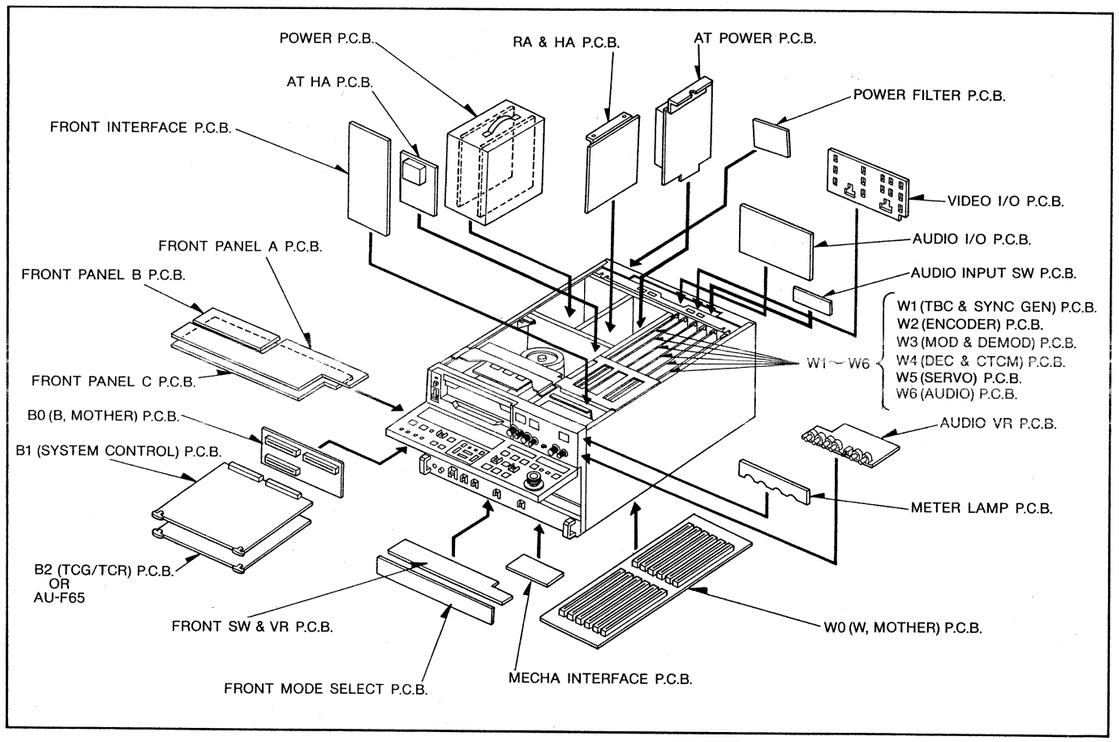

B1 SYSTEM CONTROL P.C.BOARD

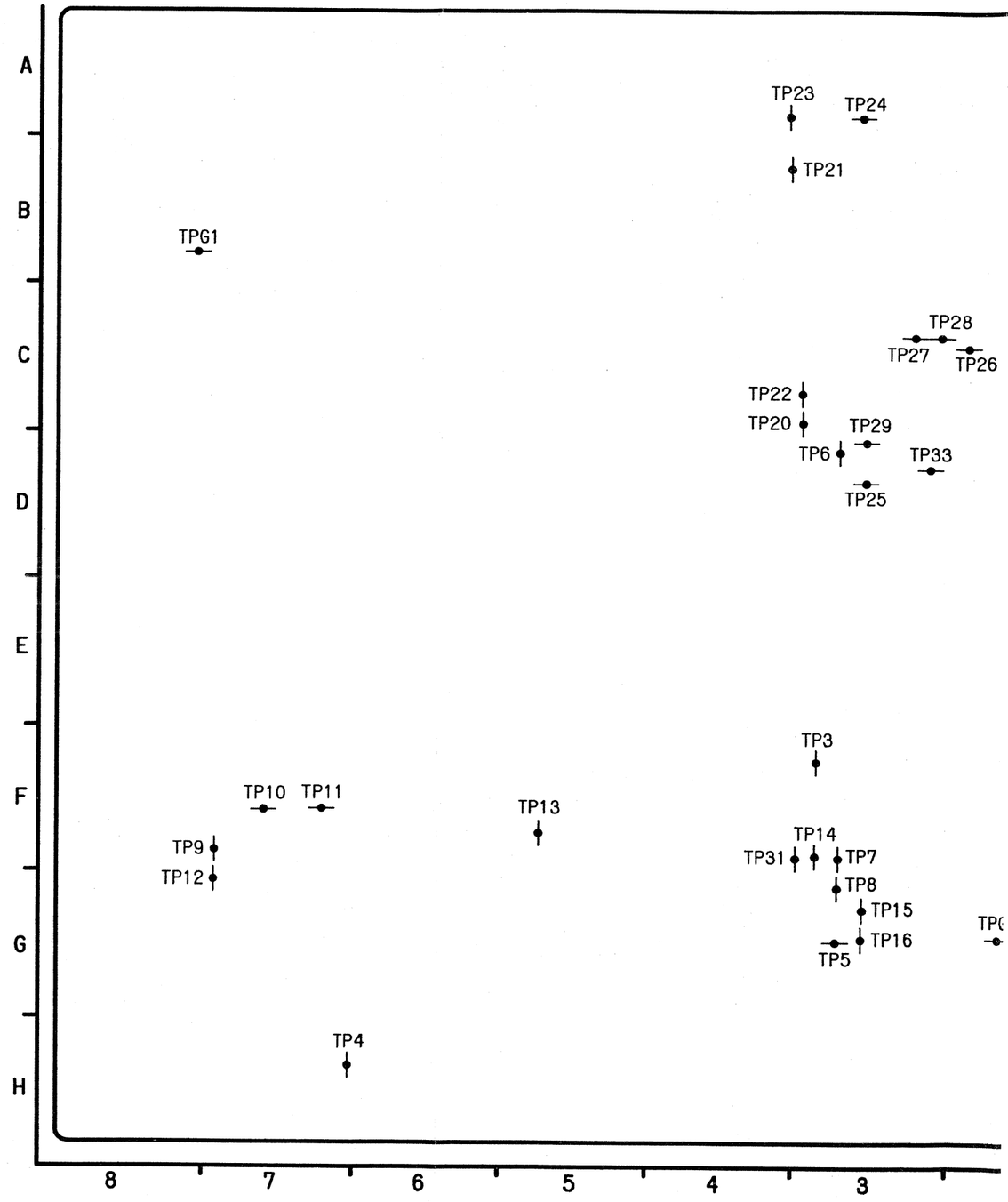

AU-F65 (OPTION)

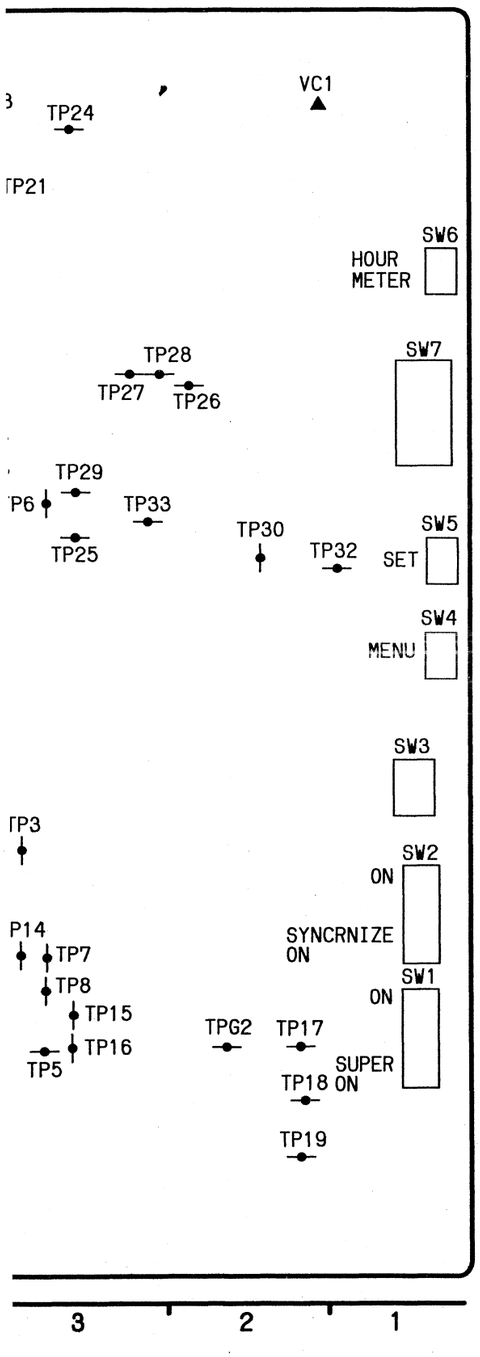

B1 SYSTEM CONTROL	
Adjustment	
VC1	A-2
Test Point	
TP3	F-3
TP4	H-7
TP5	G-3
TP6	D-3
TP7	F-3
TP8	G-3
TP9	F-7
TP10	F-7
TP11	F-7
TP12	G-7
TP13	F-5
TP14	F-3
TP15	G-3
TP16	G-3
TP17	G-2
TP18	G-2
TP19	H-2
TP20	C-4
TP21	B-4
TP22	C-4
TP23	A-4
TP24	A-3
TP25	D-3
TP27	C-3
TP28	C-3
TP29	D-3
TP30	D-2
TP31	F-4
TP32	D-1
TP33	D-3
TPG1	B-6
TPG2	G-2
Switch	
SW1	G-1
SW2	F-1
SW3	E-1
SW4	D-1
SW5	D-1
SW6	B-1
SW7	C-1

ADDRESS INFORMATION

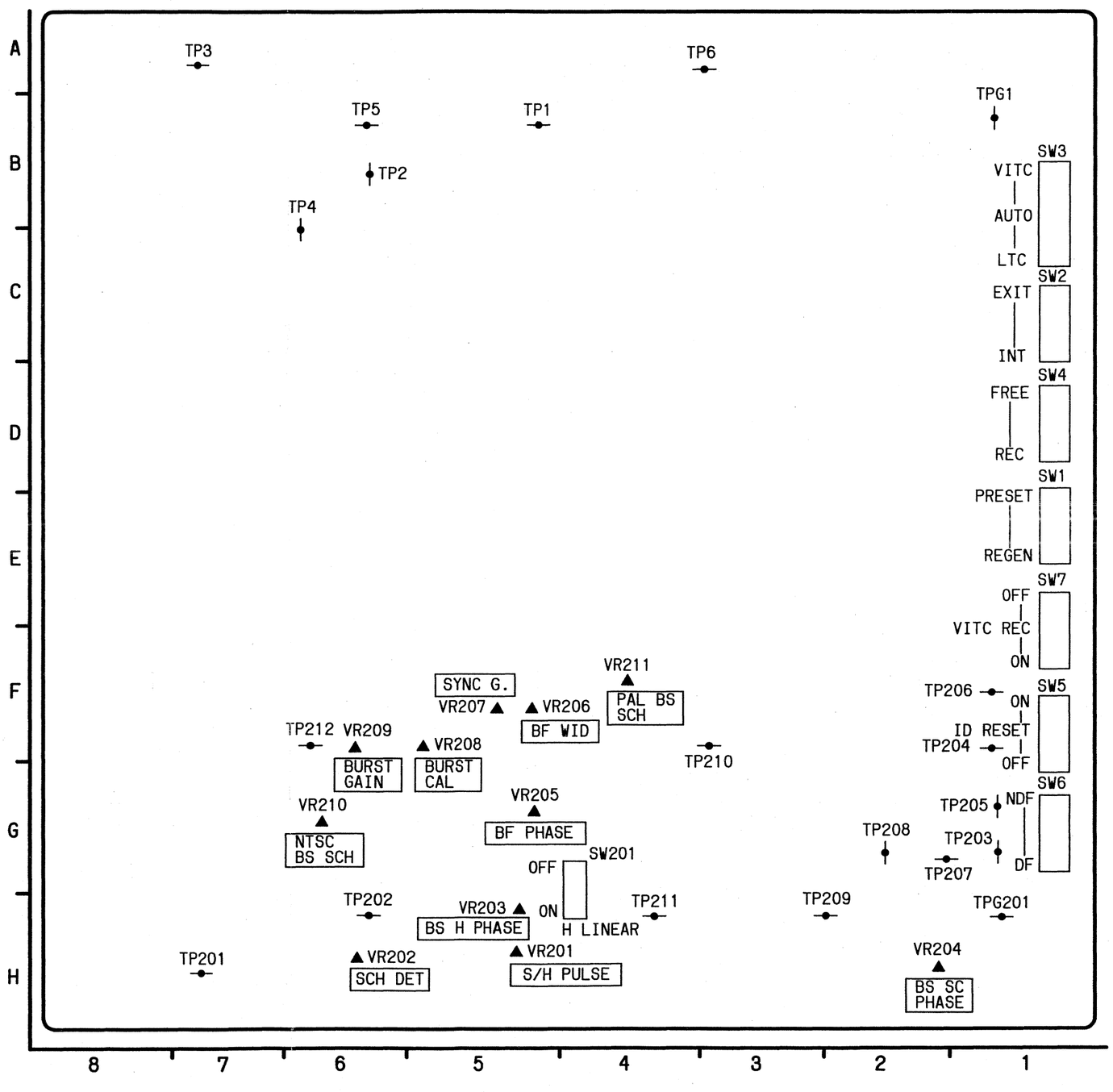

B2 TCG/TCR	
Adjustment	
VR201	H-5
VR202	H-6
VR203	H-5
VR204	H-2
VR205	G-5
VR206	F-5
VR207	F-5
VR208	F-5
VR209	F-5
VR210	G-6
VR211	F-4
Test Point	
TP1	B-5
TP2	B-6
TP3	A-7
TP4	B-6
TP5	B-6
TP6	A-4
TP201	H-2
TP202	H-1
TP203	G-1
TP204	F-1
TP205	G-1
TP206	F-1
TP207	G-1
TP208	G-2
TP209	H-3
TP210	F-4
TP211	H-4
TPG1	B-1
TPG201	H-1
Switch	
SW1	E-1
SW2	C-1
SW3	B-1
SW4	E-1
SW5	F-1
SW6	G-1
SW7	E-1

ADDRESS INFORMATION

❷ LOCATION OF TEST POINTS & CONTROLS (W1, W2)

P.C. Board Location

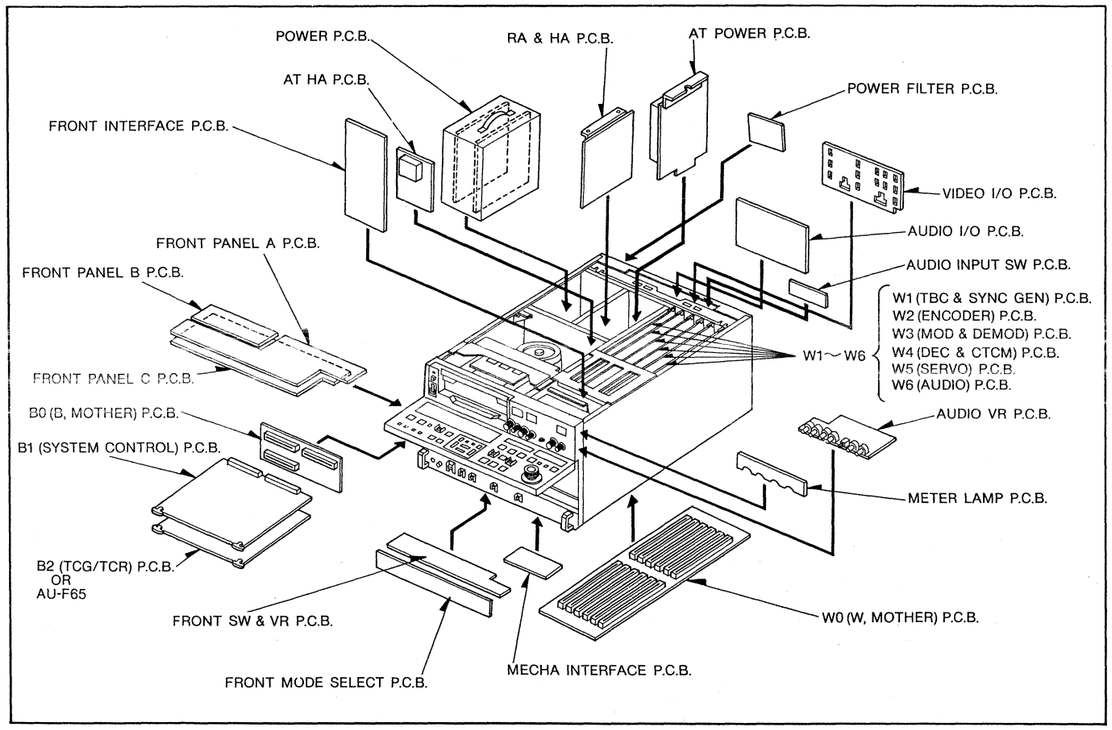

W1 TBC & SYNC GEN. P.C.BOARD

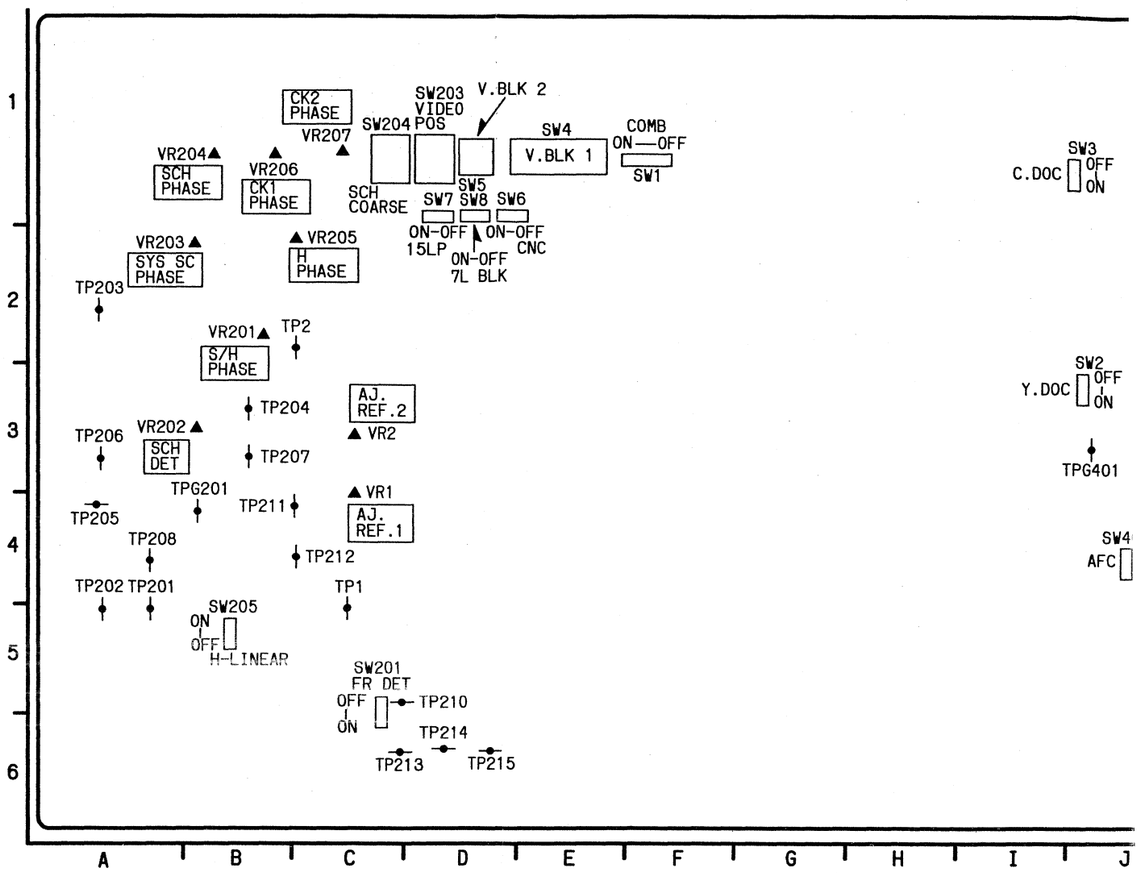

W1 TBC & SYNC GEN.					
Adjustment		TP201	A-4	TP426	L-4
VR1	C-4	TP202	A-4	TPG201	B-4
VR2	C-3	TP203	A-2	TPG401	J-3
VR7	C-1	TP204	B-3	TPG402	M-4
VR201	B-2	TP205	A-4	**Switch**	
VR202	B-3	TP206	A-3	SW1	F-1
VR203	B-2	TP207	B-3	SW4	E-1
VR204	B-1	TP208	A-4	SW5	D-1
VR205	B-2	TP210	C-5	SW6	D-1
VR206	B-1	TP211	C-4	SW7	D-1
VR401	J-5	TP212	C-4	SW8	D-1
VR402	L-2	TP213	C-6	SW203	D-1
VR403	M-5	TP214	D-6	SW204	C-1
VR405	L-1	TP215	D-6		
VR406	L-1	TP412	M-5		
VR408	M-4	TP413	L-6		
VR409	L-2	TP416	L-6		
Test Point		TP417	M-5		
TP1	C-4	TP422	J-4		
TP2	B-2	TP423	K-4		
		TP424	M-3		
		TP425	M-4		

ADDRESS INFORMATION

W2 ENCODER P.C.BOARD

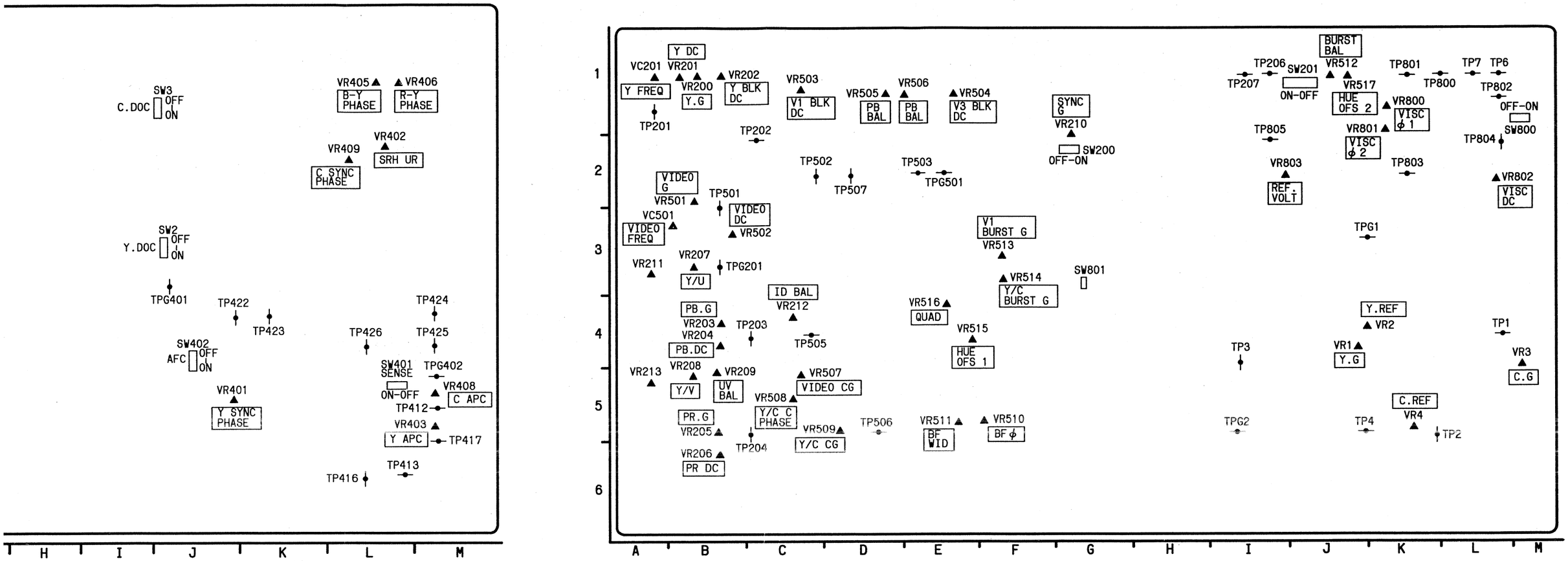

P426	L-4
PG201	B-4
PG401	J-3
PG402	M-4
tch	
W1	F-1
W4	E-1
W5	D-1
W6	D-1
W7	D-1
W8	D-1
W203	D-1
W204	C-1

W2 ENCODER

Adjustment	
VC201	A-1
VC501	B-3
VR1	J-4
VR2	J-4
VR3	M-5
VR4	K-5
VR200	B-1
VR201	B-1
VR202	B-1
VR203	B-4
VR204	B-4
VR205	B-5
VR206	B-6
VR207	B-3
VR208	B-5
VR209	B-5
VR210	G-2
VR211	A-3
VR212	C-4
VR213	A-5
VR501	B-2
VR502	B-3
VR503	C-1
VR504	E-1
VR505	D-1
VR506	D-1
VR507	C-5
VR508	C-5
VR509	D-5
VR510	F-5
VR511	E-5
VR512	J-1
VR513	F-3
VR514	F-3
VR515	E-4
VR516	E-4
VR517	J-1
VR800	K-1
VR801	K-1
VR802	L-2
VR803	I-2
Test Point	
TP1	L-4
TP2	K-5
TP3	I-4
TP4	J-4
TP6	L-1
TP7	L-1
TP201	A-1
TP202	C-2
TP203	C-4
TP204	C-5
TP206	I-1
TP207	I-1
TP501	B-2
TP502	C-2
TP503	E-2
TP505	C-4
TP506	D-5
TP507	D-2
TP800	K-1
TP801	K-1
TP802	L-1
TP803	K-2
TP804	L-2
TP805	I-2
TPG1	J-3
TPG2	I-5
TPG201	B-3
TPG501	E-2
Switch	
SW200	G-2
SW201	J-1
SW801	G-3
SW802	L-2

ADDRESS INFORMATION

❸ LOCATION OF TEST POINTS & CONTROLS (W3, W4)

P.C. Board Location

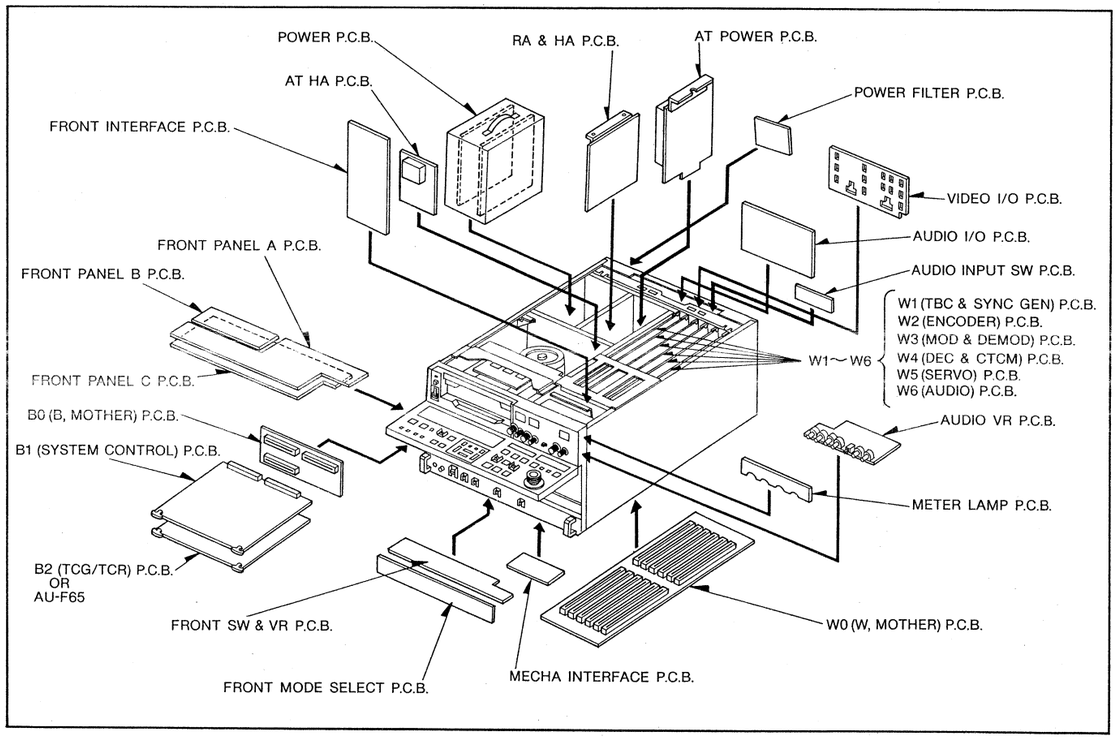

W3 MOD & DEMOD P.C.BOARD

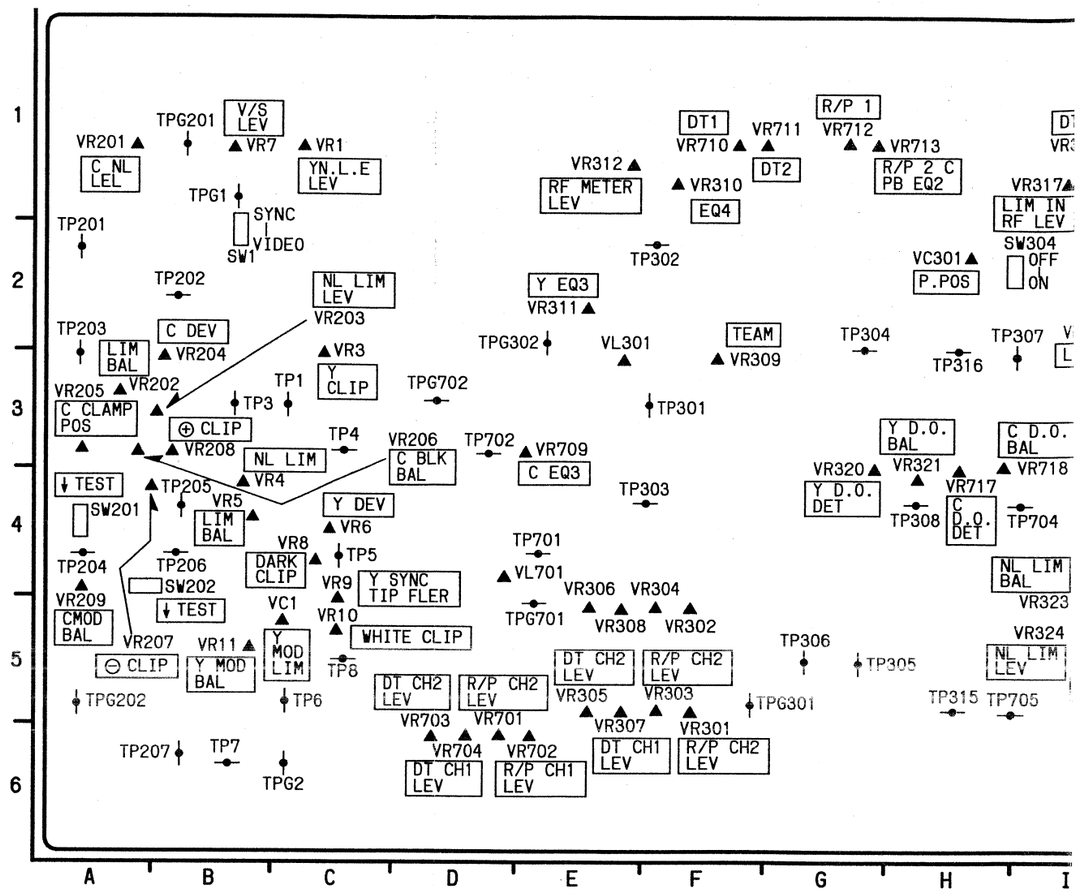

W3 MODULATOR & DEMODULATOR							
Adjustment		VR301	F-5	VR331	M-3	TP6	C-5
		VR302	F-5	VR701	D-6	TP7	B-6
VC1	C-5	VR303	F-5	VR702	E-6	TP8	C-5
VC301	H-2	VR304	F-5	VR703	D-6	TP201	A-2
VL301	E-3	VR305	E-5	VR704	D-6	TP202	B-2
VL302	J-4	VR306	E-5	VR709	E-3	TP203	A-3
VL303	L-3	VR307	E-5	VR710	F-1	TP204	A-4
VL701	D-4	VR308	E-5	VR711	F-1	TP205	B-4
VL702	J-2	VR309	F-3	VR712	G-1	TP206	B-4
VR1	C-1	VR310	F-1	VR713	G-1	TP207	B-6
VR3	C-3	VR311	E-2	VR714	J-2	TP303	E-4
VR4	B-4	VR312	E-1	VR715	L-2	TP304	G-3
VR5	B-4	VR313	I-1	VR716	K-3	TP305	G-5
VR6	C-4	VR314	J-1	VR717	H-4	TP306	G-5
VR7	B-1	VR315	J-1	VR718	H-3	TP307	H-3
VR8	C-4	VR316	J-1	VR719	K-4	TP308	H-4
VR9	C-5	VR317	I-1	VR720	K-6	TP309	J-5
VR10	C-5	VR318	I-2	VR721	K-5	TP310	J-5
VR11	B-5	VR319	J-2	VR722	K-5	TP311	J-5
VR201	A-1	VR320	G-4	VR723	L-5	TP312	L-3
VR202	A-3	VR321	H-4	VR724	J-1	TP313	L-3
VR203	A-3	VR322	I-4	VR725	M-4	TP315	H-5
VR204	B-3	VR323	I-5	VR726	M-5	TP316	H-3
VR205	A-3	VR324	I-5			TP317	L-2
VR206	A-3	VR325	I-5	**Test Point**		TP701	E-4
VR207	A-4	VR326	L-3	TP1	C-3	TP702	D-3
VR208	B-3	VR327	K-1	TP3	B-3	TP703	K-1
VR209	A-4	VR328	M-2	TP4	C-3	TP703	L-5
VR300	L-1	VR329	L-1	TP5	C-4	TP704	I-4

ADDRESS INFORMATION

W4 DECODER & CTCM P.C.BOARD

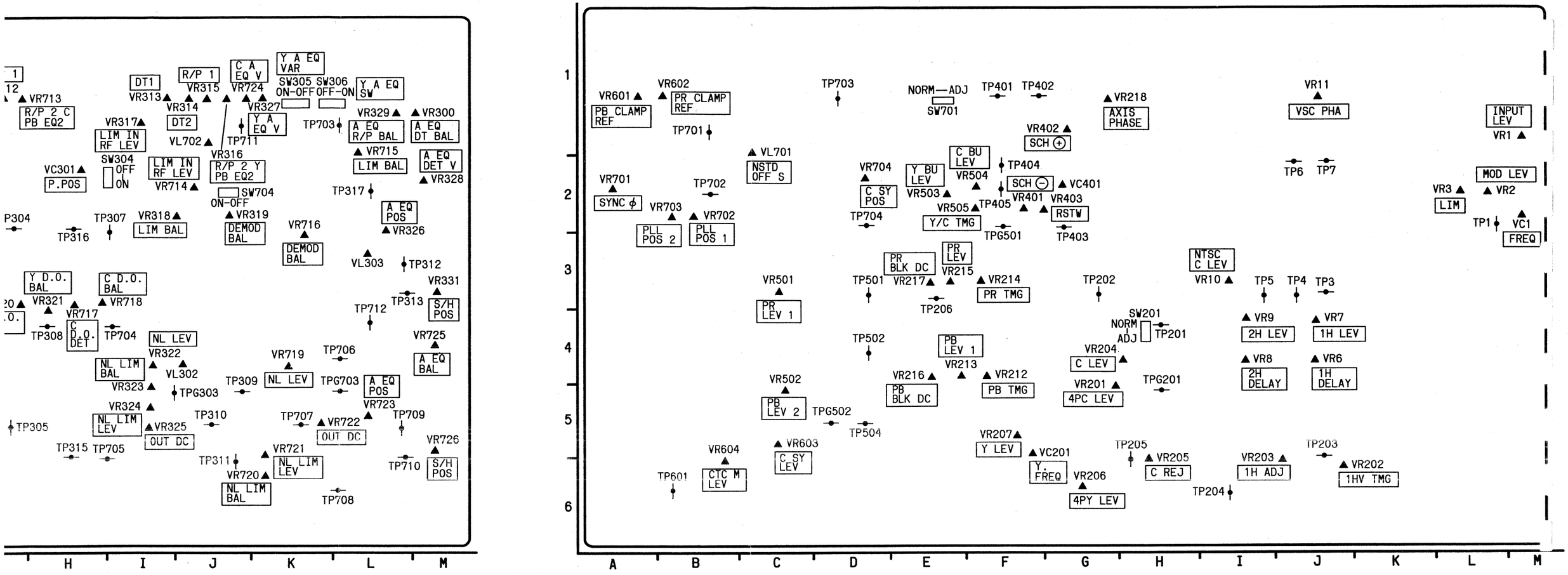

LATOR			
TP6	C-5	TP705	H-5
TP7	B-6	TP706	L-4
TP8	C-5	TP707	K-5
TP201	A-2	TP709	L-5
TP202	B-2	TP711	J-1
TP203	A-3	TP712	L-4
TP204	A-4	TPG1	B-1
TP205	B-4	TPG2	C-6
TP206	B-4	TPG201	B-1
TP207	B-6	TPG202	A-5
TP303	E-4	TPG301	F-5
TP304	G-3	TPG302	E-2
TP305	G-5	TPG303	I-5
TP306	G-5	TPG701	E-5
TP307	H-3	TPG702	D-3
TP308	H-4	**Switch**	
TP309	J-5		
TP310	J-5	SW1	B-2
TP311	J-5	SW201	A-4
TP312	L-3	SW202	A-4
TP313	L-3	SW304	H-2
TP315	H-5	SW305	K-1
TP316	H-3	SW306	K-1
TP317	L-2		
TP701	E-4		
TP702	D-3		
TP703	K-1		
TP703	L-5		
TP704	I-4		

W4 DECODER & CTCM

Adjustment		VR206	G-6	VR702	B-2	TP404	F-2
VC1	M-2	VR207	F-5	VR703	B-2	TP405	F-2
VC201	F-5	VR213	E-4	VR704	D-2	TP501	D-3
VC401	G-2	VR215	E-3	**Test Point**		TP502	D-4
VL701	C-2	VR216	E-4			TP504	D-5
VR1	M-1	VR217	E-3	TP1	L-2	TP601	B-6
VR2	L-2	VR218	G-1	TP3	J-3	TP701	B-1
VR3	L-2	VR401	F-2	TP4	J-3	TP702	B-2
VR6	J-4	VR402	G-1	TP5	I-3	TP703	D-1
VR7	J-4	VR403	F-2	TP6	J-2	TP704	D-2
VR8	I-4	VR405	F-2	TP7	J-2	TPG201	H-5
VR9	I-4	VR501	C-3	TP201	H-4	TPG501	F-2
VR10	I-3	VR502	C-5	TP202	G-3	TPG502	D-5
VR11	J-1	VR503	E-2	TP203	J-5	**Switch**	
VR201	G-5	VR504	F-2	TP204	I-6		
VR202	J-6	VR601	A-1	TP205	H-6	SW201	H-4
VR203	I-6	VR602	B-1	TP206	E-3	SW701	E-1
VR204	G-4	VR603	C-5	TP401	F-1		
VR205	H-6	VR604	B-6	TP402	F-1		
		VR701	A-2	TP403	G-3		

ADDRESS INFORMATION

❹ LOCATION OF TEST POINTS & CONTROLS (W5, W6)

P.C. Board Location

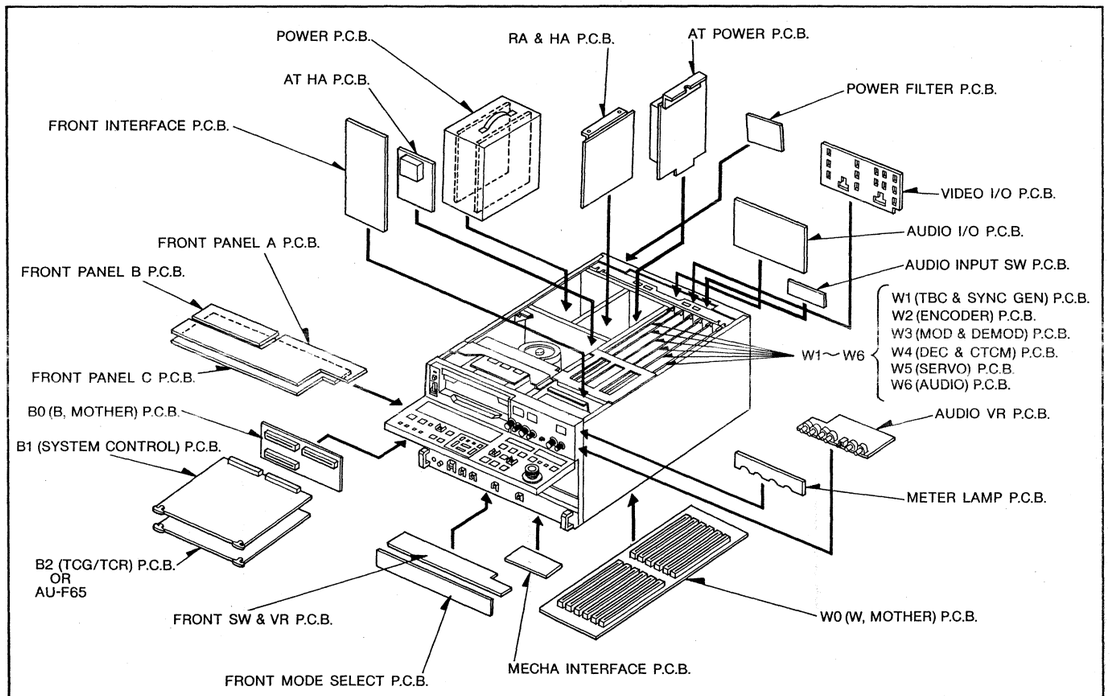

W5 SERVO/AT P.C.BOARD

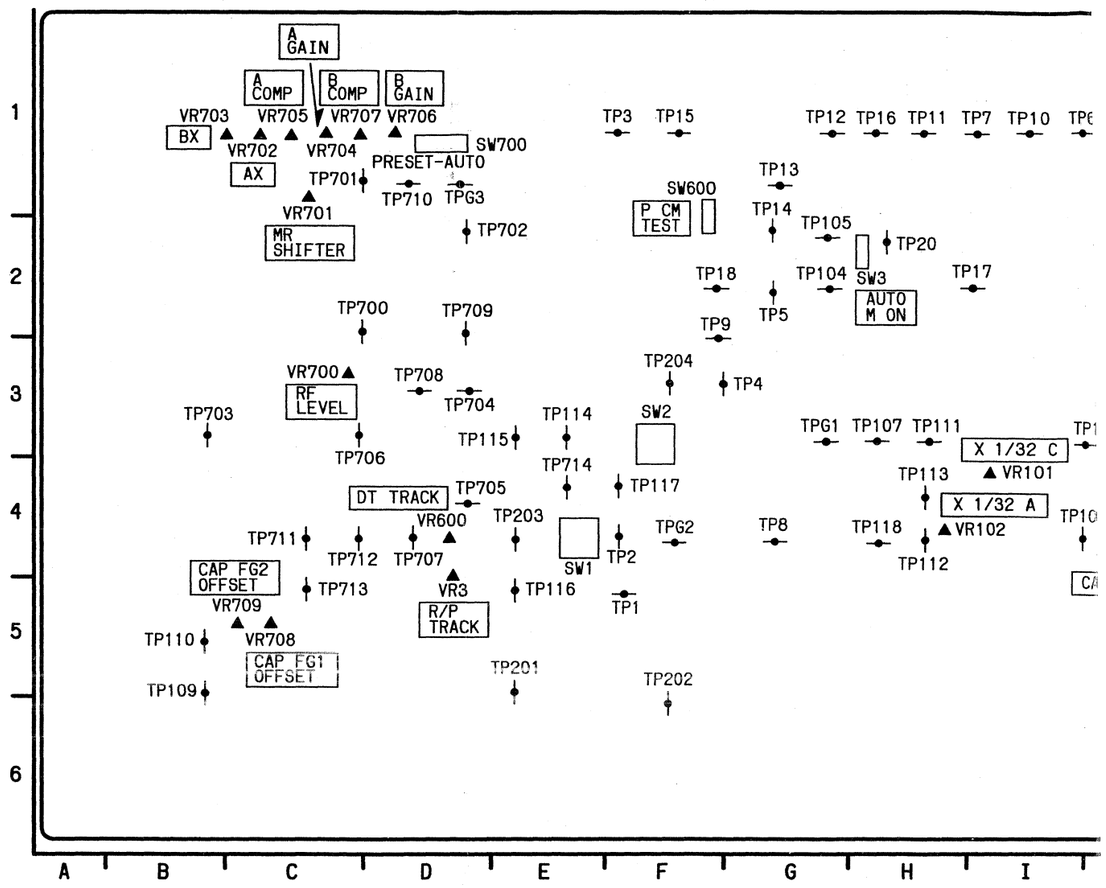

W5 SERVO/AT							
Adjustment		VR707	C-1	TP103	K-2	TP312	
VC101	J-3	VR708	C-5	TP104	G-2	TP700	
VR1	J-3	VR709	C-5	TP105	G-2	TP701	
VR3	D-4	**Test Point**		TP106	I-3	TP702	
VR101	I-4	TP1	F-5	TP107	H-3	TP703	
VR102	H-4	TP2	F-4	TP108	I-4	TP704	
VR103	J-4	TP3	F-1	TP109	B-5	TP705	
VR104	J-4	TP4	F-3	TP110	B-5	TP706	
VR105	J-4	TP5	G-2	TP111	H-3	TP707	
VR301	M-2	TP6	I-1	TP112	H-4	TP708	
VR302	M-6	TP7	I-1	TP113	H-4	TP709	
VR303	L-6	TP8	G-4	TP114	E-3	TP710	
VR304	M-5	TP9	F-2	TP115	E-3	TP711	
VR305	M-5	TP10	I-1	TP116	E-5	TP712	
VR306	M-5	TP11	H-1	TP117	F-4	TP713	
VR307	M-5	TP12	G-1	TP118	H-4	TP714	
VR308	L-3	TP13	G-1	TP201	E-5	TPG1	
VR309	L-1	TP14	G-2	TP202	F-6	TPG2	
VR600	D-4	TP15	F-1	TP203	E-4	TPG3	
VR700	C-3	TP16	H-1	TP204	F-3	**Switch**	
VR701	C-1	TP17	I-2	TP302	M-2	SW1	
VR702	C-1	TP18	F-2	TP303	L-6	SW2	
VR703	C-1	TP19	L-6	TP304	L-6	SW3	
VR704	C-1	TP20	H-2	TP306	M-5	SW600	
VR705	C-1	TP101	J-2	TP309	L-5	SW700	
VR706	D-1	TP102	J-1	TP310	M-3		
				TP311	M-6		

ADDRESS INFORMATION

W6 AUDIO P.C.BOARD

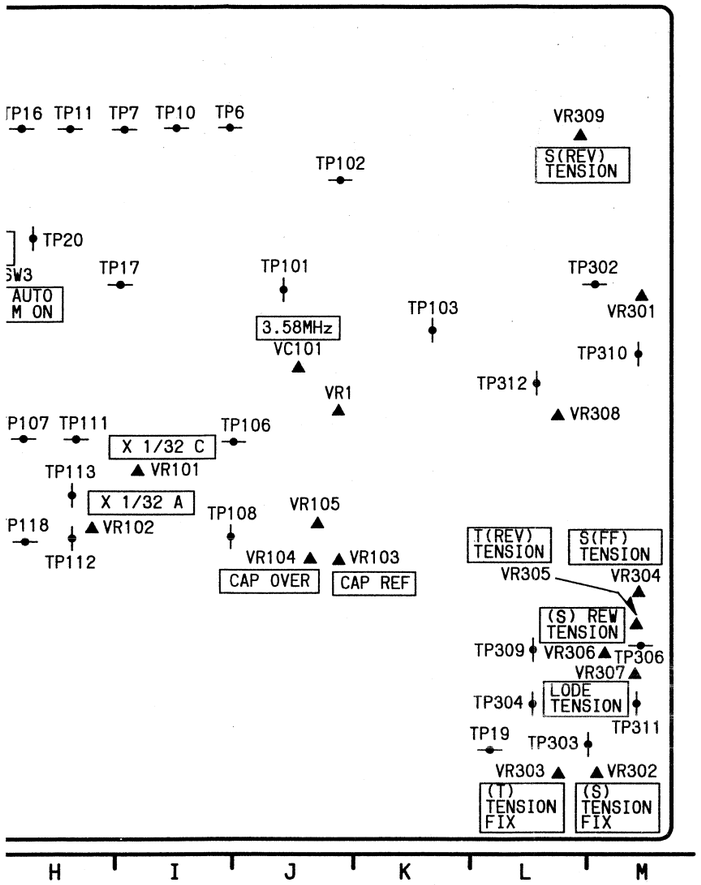

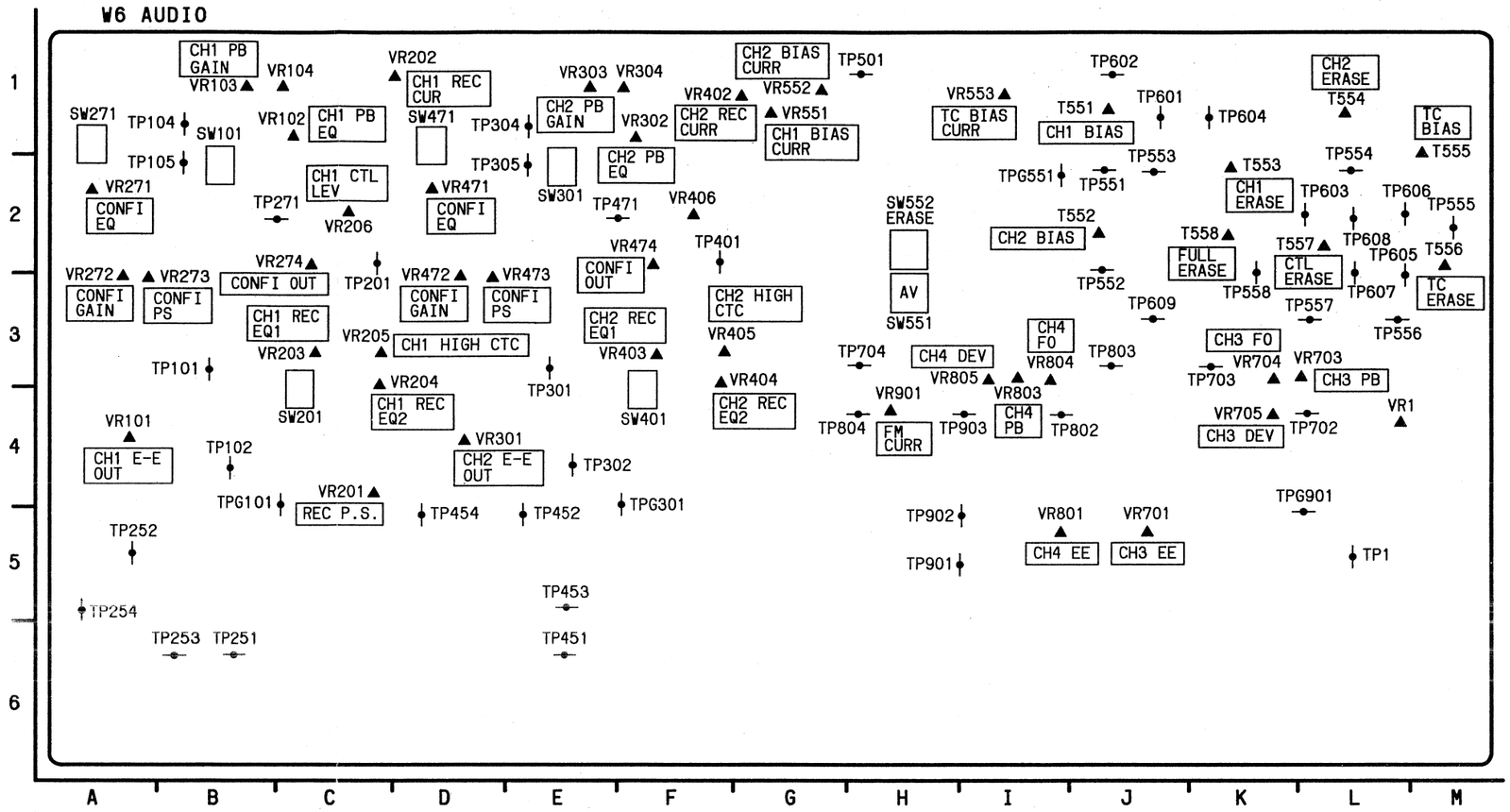

	K-2	TP312	L-3				
	G-2	TP700	D-2				
	G-2	TP701	C-1				
	I-3	TP702	D-2				
	H-3	TP703	B-3				
	I-4	TP704	D-3				
	B-5	TP705	D-4				
	B-5	TP706	C-3				
	H-3	TP707	D-4				
	H-4	TP708	D-3				
	H-4	TP709	D-2				
	E-3	TP710	D-1				
	E-3	TP711	C-4				
	E-5	TP712	C-4				
	F-4	TP713	C-5				
	H-4	TP714	E-4				
	E-5	TPG1	G-3				
	F-6	TPG2	F-4				
	E-4	TPG3	D-1				
	F-3	**Switch**					
	M-2	SW1	E-4				
	L-6	SW2	F-3				
	L-6	SW3	H-2				
	M-5	SW600	F-1				
	L-5	SW700	D-1				
	M-3						
	M-6						

W6 AUDIO

Adjustment							
T551	J-1	VR306	F-2	TP251	C-6	TP607	L-2
T552	J-2	VR402	G-1	TP252	A-5	TP608	L-2
T553	K-2	VR403	F-3	TP253	C-6	TP609	J-3
T554	L-1	VR404	F-3	TP254	A-5	TP702	L-4
T555	M-1	VR405	F-3	TP271	C-2	TP703	K-3
T556	M-2	VR471	D-2	TP301	E-3	TP704	H-3
T557	L-2	VR472	D-3	TP302	E-4	TP802	I-4
T558	K-2	VR473	D-3	TP304	E-1	TP803	J-3
VR1	L-4	VR474	F-2	TP305	E-2	TP804	H-4
VR101	A-4	VR551	G-1	TP401	F-2	TP901	I-5
VR102	C-1	VR552	G-1	TP451	E-6	TP902	I-5
VR103	B-1	VR553	I-1	TP452	E-5	TP903	I-4
VR104	C-1	VR701	J-5	TP453	E-5	TPG101	C-4
VR201	C-4	VR703	L-3	TP454	D-5	TPG301	F-4
VR202	D-1	VR704	K-3	TP471	F-2	TPG551	I-2
VR203	C-3	VR705	K-4	TP501	H-1	TPG901	L-4
VR204	C-3	VR801	I-5	TP551	J-2	**Switch**	
VR205	C-3	VR803	I-3	TP552	J-2	SW101	B-1
VR206	C-2	VR804	I-3	TP553	J-2	SW201	C-4
VR271	A-2	VR805	I-3	TP554	L-2	SW271	A-1
VR272	A-3	VR901	H-4	TP555	M-2	SW301	E-2
VR273	A-3	**Test Point**		TP556	L-3	SW401	F-4
VR274	C-2	TP1	L-5	TP557	L-3	SW471	D-1
VR301	D-4	TP101	B-3	TP558	K-2	SW551	H-3
VR302	F-1	TP102	B-4	TP601	J-1	SW552	H-2
VR303	E-1	TP104	B-1	TP602	J-1		
VR304	F-1	TP105	B-2	TP603	L-2		
		TP201	C-2	TP605	L-2		
				TP606	L-2		

ADDRESS INFORMATION

TECHNICAL EXPLANATIONS

This section describes general technical concepts of the AU-65, AU-63 and AU-62.

Panasonic

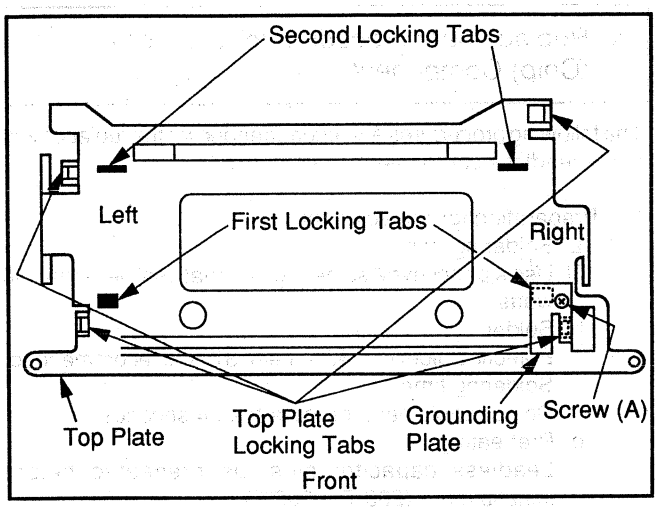

Fig. 12

Method 2 is an alternate method for loading with no tape.

Method 2 - Refer to Fig. 12.

1. Disconnect the AC Cord.
2. Place the Unit in the Service Position (1).
3. Place a jumper between TP6001 on the System Control Section of the VCR Main C.B.A. and GND.
4. Remove Screw (A) and lift (Do Not Remove) the Grounding Plate to access the right side First Locking Tab.
5. Connect the AC Cord.
6. The VCR turns ON automatically and the Cassette Holder Ass'y is loaded. The top of Set Lever L and R is locked by the First Locking Tab (Left and Right). Then the VCR turns OFF.
7. Clear the First Locking Tab (Left and Right) by pressing down the top of the Set Lever L and R.
8. Turn ON the Power Switch.
9. The top of Set Lever L and R is locked by the Second Locking Tab (Same as Step 6).
10. Clear the Second Locking Tab (Left and Right) by pressing down the top of the Set Lever L and R.
11. Turn ON the Power Switch.
12. The Cassette Holder Ass'y is in the down position and the loading operation is completed.

Method 3 is an alternate method for loading with no tape.

Method 3 - Refer to Fig. 12

1. Disconnect the AC Cord.
2. Place the Unit in the Service Position (1) and remove Screw (A). Remove Grounding Plate. Then remove the Top Plate of Cassette Up Ass'y by releasing the 4 Top Plate Locking Tabs shown in Fig. 12.

   Note :
   When removing the Top Plate of Cassette Up Ass'y, work with care so as not to break the locking tabs shown in Fig. 12.

3. Place a jumper between TP6001 on the System Control Section of the VCR Main C.B.A. and GND.
4. Plug in the AC Cord and place the Cassette Holder Ass'y in the down position. Then begin the loading operation sequence.

Note :
To place the Cassette Holder Ass'y in the up position, push the STOP/EJECT Button to eject.

Q. How to remove the Cassette Up Ass'y

1. In the order described in the Disassembly of Cabinet Parts section, remove the Back Cover Unit, VCR Unit and Top Shield Plate Ass'y.
2. Remove 2 Screws (S-11) in Fig. D9, Page 2-3.
3. Remove 2 Screws (S-18), 2 Screws (S-19), in Fig. D11, Page 2-4.

R. Worm Wheel Position in Eject Position

After performing a mechanical alignment, the hole of the Worm Wheel is positioned at the Bottom as shown in Fig. 13. However, when the Eject operation is performed electrically, the position of the hole on the Worm Wheel is slightly shifted from the original adjustment point. This is normal operation. Do not try to readjust the Worm Gear position.

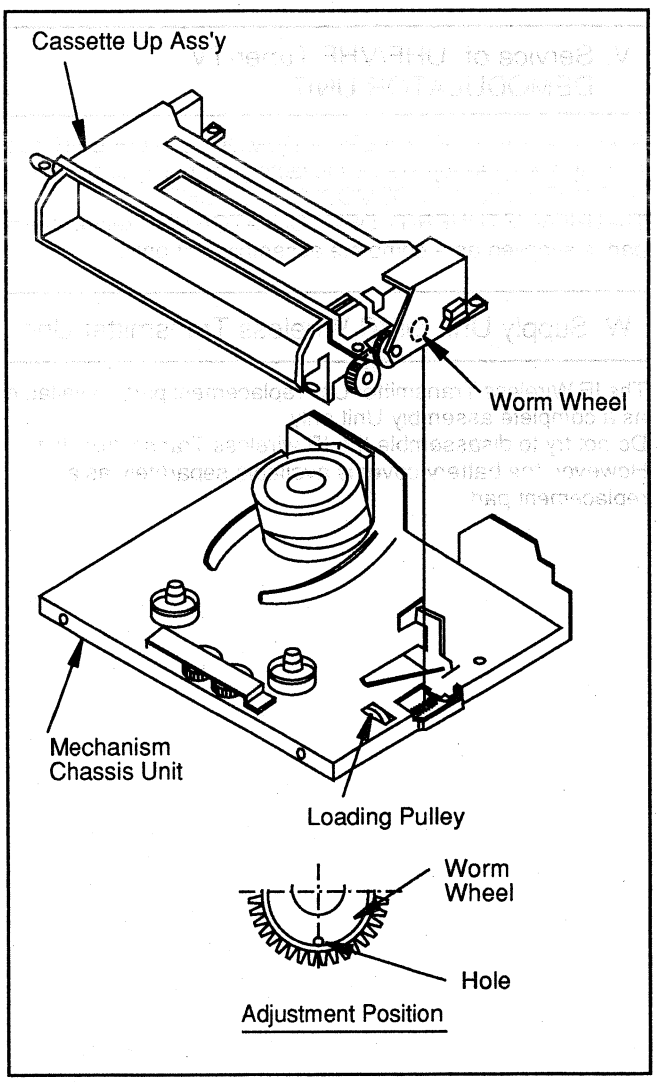

Fig. 13

S. Black Screws on the Chassis

Black Screws are used on the Mechanism Chassis to identify screws that require adjustment.

T. Variable Voltage Isolation Transformer

Because a Hot Chassis Ground is present in the Switched Mode Power Supply Circuit, an Isolation Transformer must be used. Also, in order to have the ability to increase the input voltage slowly, when troubleshooting this type Power Supply Circuit, a variable isolation transformer is required.

U. High Voltage Component

Avoid touching the following High Voltage Components : CRT C.B.A., terminals on Deflection Yoke, Anode Cap, Q551 and terminals of Flyback Transformer on TV Main C.B.A.

V. Service of UHF/VHF Tuner/TV DEMODULATOR UNIT

Since the UHF/VHF TUNER/TV DEMODULATOR UNIT has already been pre-adjusted at the factory, do not try to adjust the UHF/VHF TUNER/TV DEMODULATOR UNIT.
The UHF/VHF TUNER/TV DEMODULATOR UNIT replacement part is supplied as a complete assembly unit only.

W. Supply Unit for IR Wireless Transmitter Unit

The IR Wireless Transmitter Unit replacement part is available as a complete assembly Unit only.
Do not try to disassemble the IR wireless Transmitter Unit. However, the battery cover is available separately as a replacement part.

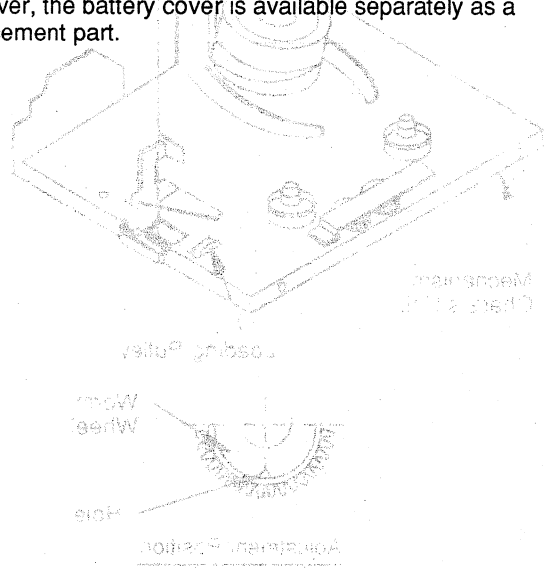

X . Replacement procedure for Leadless (Chip) Component

The following procedures are recommended for the replacement of the leadless components used in this Unit.

1. Preparation for replacement
   a. Soldering Iron
      Use a pencil-type soldering iron that uses less than 30 watts.
   b. Solder
      Eutectic Solder (Tin 63%, Lead 37%) is recommended.
   c. Soldering time
      Do not apply heat for more than 4 seconds.
   d. Preheating
      Leadless capacitor must be preheated before installation. - (266°F ~ 302°F)
      (130°C ~150°C) for about two minutes.

   Note:
   a. Leadless component must not be reused after removal.
   b. Excessive mechanical stress and rubbing of the component electrode must be avoided.

2. Removing the leadless component
   Grasp the leadless component body with tweezers and alternately apply heat to both electrodes. When the solder on both electrodes is melted, remove leadless component with a twisting motion.

   Note:
   a. Do not attempt to lift the component off the board until the component is completely disconnected from the board by a twisting action.
   b. Be careful not to break the copper foil on the printed circuit board.

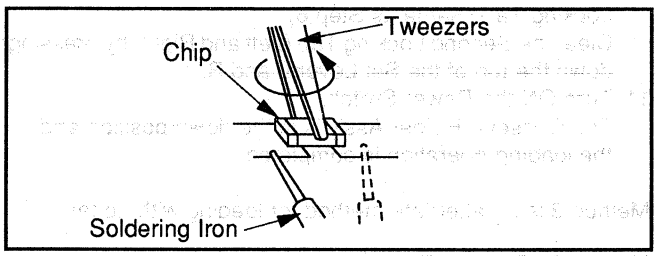

Fig. 14-1

3. Installing the leadless component
   a. Presolder the contact points on the circuit board.

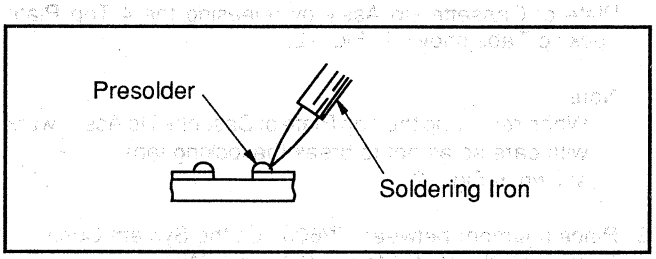

Fig. 14-2

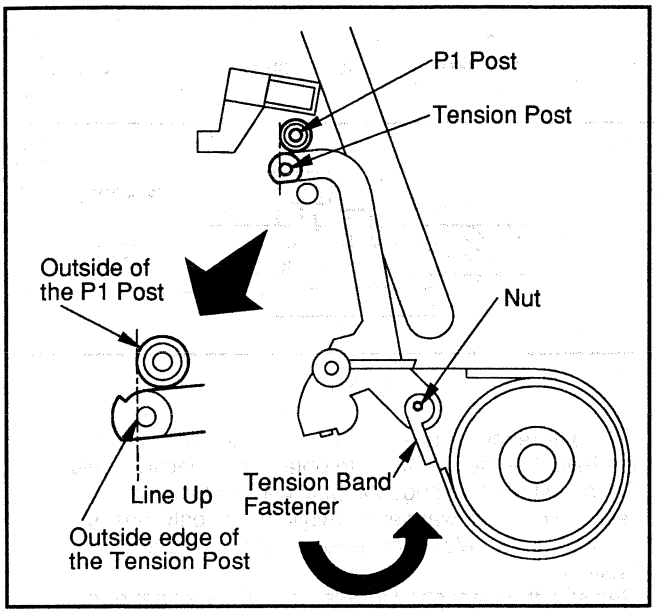

Fig. M7

5. MEASUREMENT AND ADJUSTMENT OF BACK TENSION

Purpose :
To fine adjust the Back Tension so that the tape runs smoothly with a constant tension.

Symptom of Misadjustment :
1) If the tape tension is less than the specified value, the tape cannot come into proper contact with the Video Heads, resulting in poor picture playback.
2) If the tape tension is too high, the tape will soon be damaged.

A : Measurement Procedure

*Equipment Required :
Back Tension Meter (Made in U.S.A., Purchase Locally)
VHS Cassette Tape (120-Minute Tape)

*Specification ..... 20 ~ 25g

1. Remove the Top Cover.
2. Play back a T120 cassette tape from its beginning for approx. 10 to 20 seconds, until the tape's movement has stabilized.
3. Insert a Tension Meter into tape path and confirm the reading.
4. If the reading is out of specification, do the adjustment procedure.

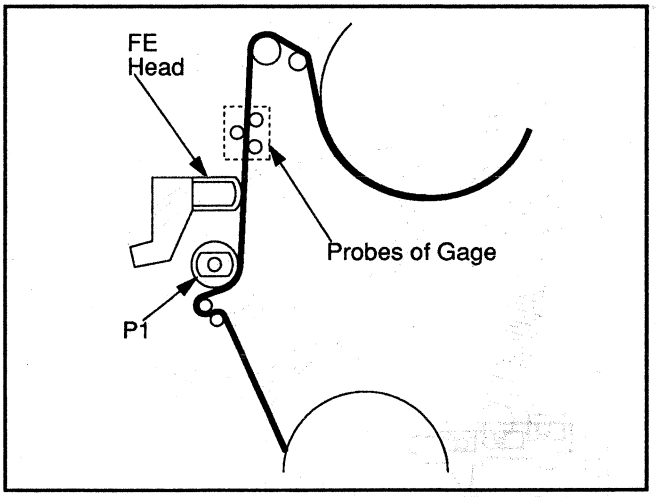

Fig. M8

Note :
1. Be sure that the three probes of the meter are all in solid contact with the tape, but out of contact with any other parts while measuring.
2. It is recommended that measurements be taken three times because the tension meter is very sensitive to external vibrations.

B : Adjustment Procedure

1. Remove the Cassette Up Ass'y. Then re-position the Tension Spring on the Tension Arm Base Teeth in either direction as indicated by the arrow to obtain the specified tension. (See Fig. M9).
2. Re-position the Tension Spring toward the front to increase tension, or toward the rear to decrease tension.
3. Reinstall the Cassette Up Ass'y and verify tension with the meter once again.
4. Reinstall the cabinet parts.

Note :
If the specified tension is not obtained even if the Tension Spring is re-positioned, replace the Tension Spring, replace the Tension Band, clean the Reel Table, or be sure there is no dust between the Tension Band and the Reel Table.

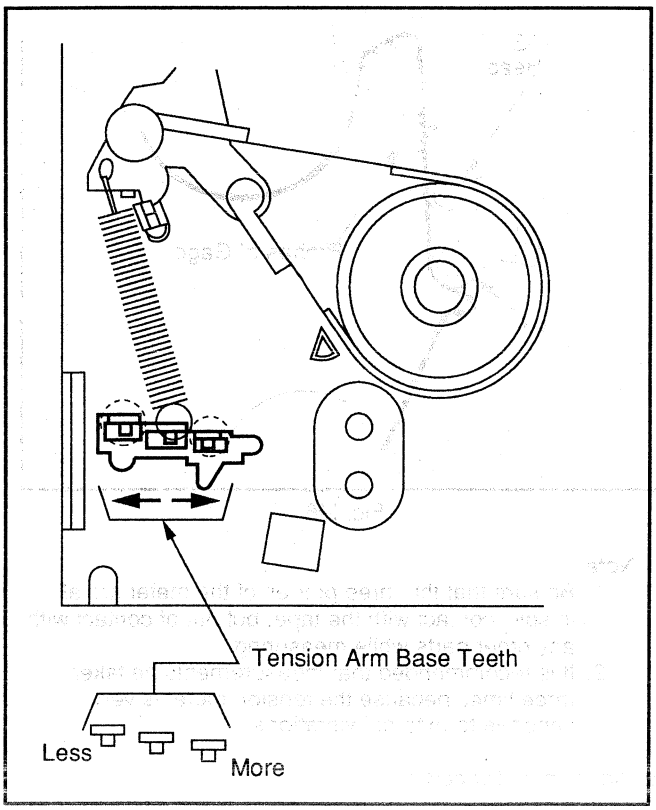

Fig. M9

6. HEIGHT ADJUSTMENT OF REEL TABLES

Purpose :
To properly align the height of the tape wound on the Supply and Take-Up Reels.

Symptom of Misadjustment :
If the height of the tape is not properly aligned, the tape will eventually be damaged.

* Equipment Required :
Post Adjustment Plate ..... (VFKS0010)
Reel Table Height Fixture ..... (VFKS0009)

* Specification ..... 0 ± 0.1mm

1. Remove the Cassette Up Ass'y.
2. Place the Post Adjustment Plate over the reels, and put the fixture on it. Set the fixture to zero ("0") and ensure that the foot of the fixture touches the cut-out portion of the plate.

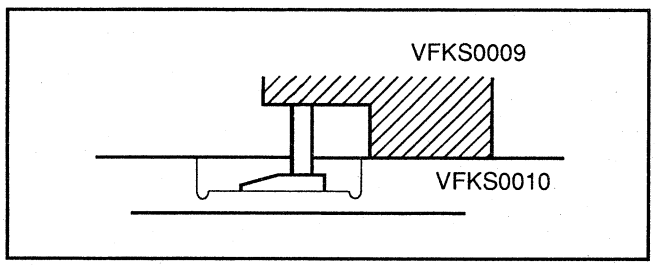

Fig. M10-1

3. Then measure the top portion of the Reel Table and compare the difference against the result of the measurement taken in the above step. Do the same for the other reel table.

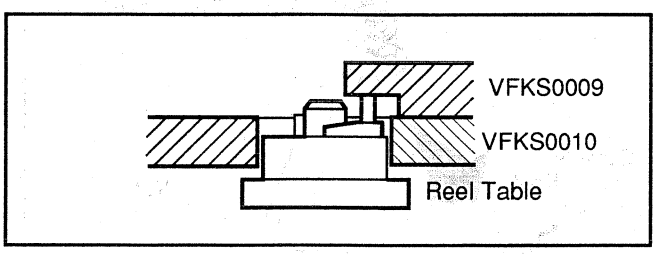

Fig. M10-2

4. If the difference is more than 0.1mm (higher or lower), adjust the height of the reel table to obtain the specified height.
5. For adjustment, change the poly washer located under the reel table. (The washer is available in only one size of 0.13mm thick.) Move the locking tab to remove the reel table.
6. Reinstall the Cassette Up Ass'y and the cabinet parts.

7. HEIGHT ADJUSTMENT OF TAPE GUIDE POSTS (PRELIMINARY ADJUSTMENT)

*Equipment Required :
Lock Screw Wrench ..... (VFKS0032)
Post Adjustment Plate ..... (VFKS0010)
Reel Table Height Fixture ..... (VFKS0009)
Post Adjustment Screwdriver ..... (VFK0329)

7-A. HEIGHT ADJUSTMENT OF P2 AND P3

Purpose :
To properly align the position of the tape with the Cylinder Lead so that the tape runs with stability.

Symptom of Misadjustment :
1) Since the Envelope Waveform Signal cannot be tracked properly, the Playback picture will be poor.
2) Since the tape does not run smoothly, the tape will eventually be damaged.
3) Tape interchangeability is poor.

1. Remove the Cassette Up Ass'y.
Then install the Post Adjustment Plate.

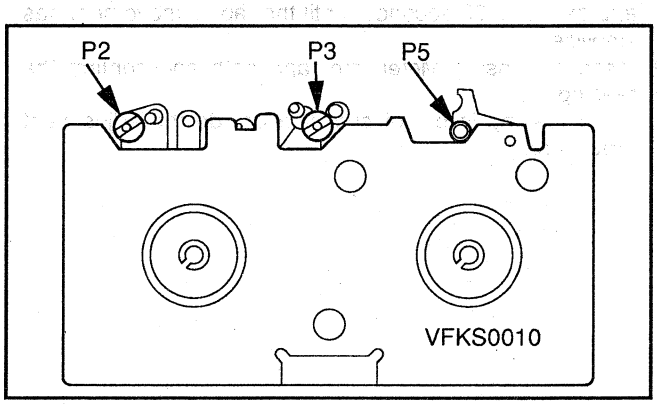

Fig. M11-1

2. First, lower all posts to match the height condition as shown in Fig. M11-2.

The upper edge of the lower tape guide on each post should be below the bottom of the foot. Loosen Black Lock Screws located at the lower portion of the posts (P2 & P3) using Lock Screw Wrench, then turn the posts with a Post Adjustment Screwdriver.

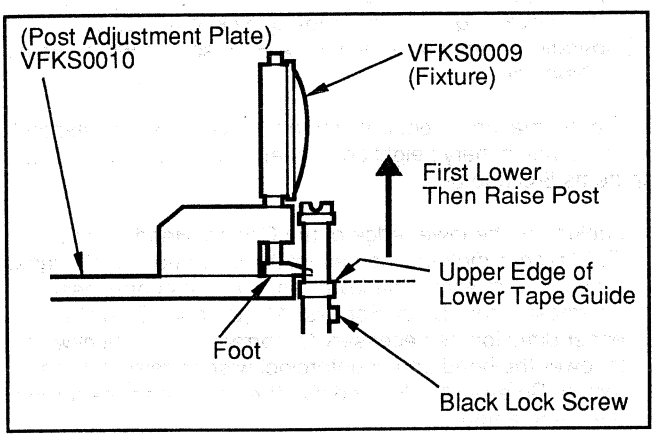

Fig. M11-2

3. Place the fixture on the Post Adjustment Plate and fit the foot to the Adjustment Plate as shown in Fig. M11-2. (The foot of the fixture should be fully lowered until it touches the plate.)
4. Set the fixture to zero ("0") and slowly raise the post until it just touches the foot. When the foot touches the post, it should fit as shown in Fig. M11-3 (b). For adjustment of P2 and P3, use a Post Adjustment Screwdriver.

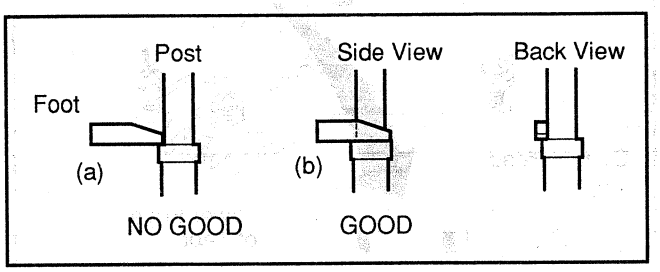

Fig. M11-3

Note:
Upon completion of adjustment, tighten the Black Lock Screws on P2 and P3 using the Lock Screw Wrench.

7-B. HEIGHT ADJUSTMENT OF P5 ARM UNIT

Purpose :
To properly align the Phase and Speed Controls during the CUE/REVIEW Modes and perform the CUE/REVIEW operations without any small additional noise in the picture.

Symptom of Misadjustment :
1) Noticeable noise appears in the picture.
2) The tape will eventually be damaged.

*Equipment Required :
Post Adjustment Plate ..... (VFKS0010)
Reel Table Height Fixture ..... (VFKS0009)
Nut Driver (5.5mm) ..... Purchase Locally

*Specification ..... 0 (+0, -0.08) mm

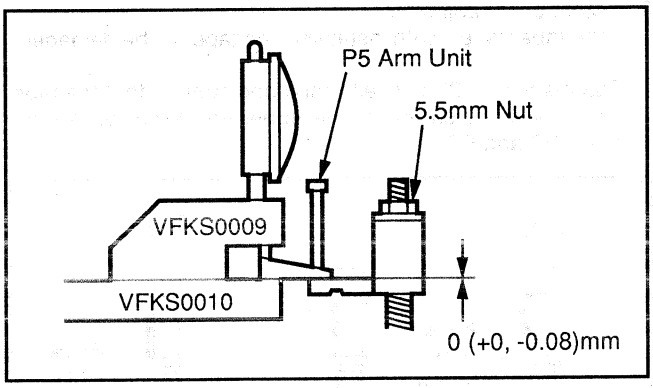

Fig. M11-4

1. Place the Post Adjustment Plate over the Reels, and put the Fixture on it. Set the Fixture to zero ("0") when the foot just touches the Post Adjustment Plate.
2. Slightly raise the P5 post above the plate by turning the 5.5mm Nut counterclockwise. Place the foot on the post as shown in Fig. M11-4.
3. Then slowly turn the 5.5mm Nut clockwise until the fixture reads the specified height.
4. Remove the Post Adjustment Plate. Reinstall the Cassette Up Ass'y and the cabinet parts.

Note:
Upon completion of the above procedure, play back the tape and confirm that the tape runs properly without curling between the lower and upper limits of the P5 Post. Also confirm that the tape is running smoothly. If adjustment is required, slightly turn the 5.5mm Nut until the curling smooths out.

8. TAPE INTERCHANGEABILITY ADJUSTMENT (FINAL ADJUSTMENT)

Note :
To perform these adjustment/confirmation procedures, set Tracking to the Neutral position.

*Equipment Required :
Dual Trace Oscilloscope
VHS Alignment Tape ..... (VFMS0001H6)
Post Adjustment Screwdriver ..... (VFK0329)
H-Position Adjustment Screwdriver ..... (VFKS0080)
Lock Screw Wrench ..... (VFKS0032)

8-A. CONFIRMATION OF TAPE TRAVEL

Purpose :
To be sure that the tape runs is smoothly.

Symptom of Misadjustment :
If the tape travels with instability, the tape will be damaged.

1. Play back a T120 cassette tape and confirm that the tape travels without curling at the upper and lower guides on posts P2 and P3.

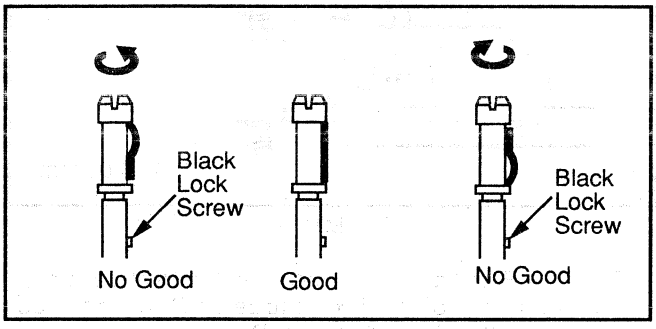

Fig. M12

2. If curling is apparent, adjust the height of the posts by turning the top of the post with the Post Adjustment Screwdriver (for P2 & P3).

Note:
Before turning P2 and P3, slightly loosen the Black Lock Screw using the Lock Screw Wrench.

8-B. CONFIRMATION OF A/C HEAD HEIGHT

The height of the A/C Head replacement part assembly has already been adjusted at the factory.

Purpose :
To be sure the tape runs properly along the Control Head.

Symptom of Misadjustment :
If the control signal is not properly picked up, Servo Operation cannot be achieved. A Blue screen will be seen in Playback.

This confirmation is required when the A/C Head is replaced and for a preliminary height adjustment. For final adjustments, do Items 8-C and 8-D.

1. Looking at the lower edge of the Control Head with the T120 tape in motion, ensure that the lower edge of the tape runs 0.25mm above the lower edge of the control head. If it doesn't, turn Black Screws (A), (B), and (C) slightly in either direction as necessary to correct it. Turn clockwise to lower the head and counterclockwise to raise it. When turning Screws (A), (B), and (C), they must each be turned the same amount.

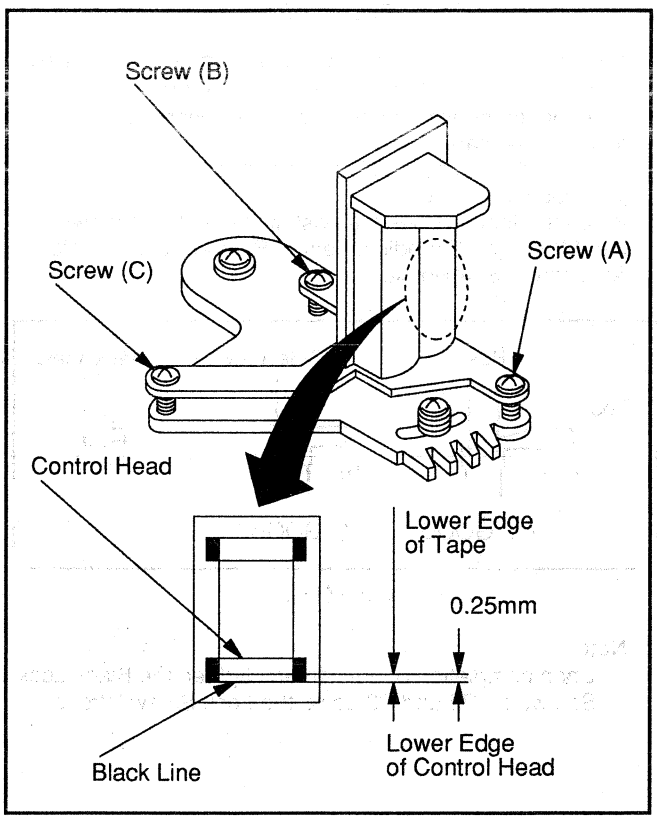

Fig. M13

1. GENERAL (FOR NTSC: AU-665/65/63/62 & PAL: AU-65/63/62)

1-1. Introduction

Since its introduction in 1986, the MII format has played a key role in the world of broadcasting and professional video production. MII VTRs were also used for by America's NBC and South Korea's KBS to cover the 1988 Seoul Olympics, and are in daily use with broadcasters throughout Europe, MI has drawn worldwide praise for its outstanding performance, superior picture and sound quality, 95–minute recording capability and compact, lightweight design. Above all, though, its ability to support integrated use from ENG and EFP to studio editing and automated transmission. New we are introducing a new generation of MII equipment, incorporating innovative technology which responds to the user needs that emerged in the four years since MII's inception.

This new lineup brings professional video users outstanding quality to advanced features, easy operation and high cost–performance ratio.

We shall introduce the recording system, signal processing and other notable features of the M II Format in this report.

AU-665 (NTSC)

Video

Television Format:	NTSC: 525 lines, 60 fields
Modulation System:	Y: Frequency Modulation C: Time compressed multiplexing
Bandwidth:	
Component Y:	30Hz~4.5MHz, +0.5/−3.0dB
C (P_B, P_R):	30Hz~1.5MHz, +0.5/−3.0dB
S/N Ratio:	
Component Y:	Better than 50dB
Composite Y:	Better than 48dB
C (AM, PM):	Better than 52dB
YC Delay:	Less than 20ns
K Factor:	Less than 2%
Differential Gain:	Less than 2%
Differential Phase:	Less than 2°
Linearity:	Less than 3% (Component)

Audio

Linear (CH1/CH2)	
Frequency Response:	50Hz~15kHz, +2.0/−3.0dB
S/N Ratio:	Better than 56dB
(at 3% distortion)	(Dolby NR off)
(CCIR)	Better than 74dB (Dolby NR on)
Distortion:	Less than 0.8% at 1kHz standard
Cross Talk:	Less than −60dB (1kHz)
Erase Ratio (at 1kHz):	Less than −70dB
Wow and Flutter:	Less than 0.15% (DIN WTD)
Phase:	±20° (at 15kHz)
FM (CH3/CH4)	
Frequency Response:	20Hz~20kHz, +1.0/−2.0dB
Dynamic Range:	More than 80dB
Distortion:	Less than 0.5% at 1kHz standard
Cross Talk:	Less than −65dB (1kHz)
Phase:	±10° (at 15kHz)

Table 1(a) Specifications for AU–665 (NTSC)

AU-65/63/62 (NTSC)

Video

Television Format:	NTSC: 525 lines, 60 fields
Modulation System:	Y: Frequency Modulation C: Time compressed multiplexing
Bandwidth:	
Component Y:	30Hz~4.5MHz, +1.0/−4.0dB
C (P_B, P_R):	30Hz~1.5MHz, +0.5/−3.0dB
S/N Ratio:	
Component Y:	Better than 49dB
Composite Y:	Better than 47dB
C (AM, PM):	Better than 50dB
YC Delay:	Less than 20ns
K Factor:	Less than 2%
Differential Gain:	Less than 3%
Differential Phase:	Less than 3°
Linearity:	Less than 3% (Component)

Audio

Linear (CH1/CH2)	
Frequency Response:	50Hz~15kHz, +2.0/−3.0dB
S/N Ratio:	Better than 56dB
(at 3% distortion)	(Dolby NR off)
(CCIR)	Better than 74dB (Dolby NR on)
Distortion:	Less than 1.0% at 1kHz standard
Erase Ratio (at 1kHz):	Less than −65dB
Wow and Flutter:	Less than 0.15% (DIN WTD)
FM (CH3/CH4)	
Frequency Response:	20Hz~20kHz, +1.0/−2.0dB
Dynamic Range:	More than 80dB
Distortion:	Less than 0.5% at 1kHz standard
Cross Talk:	Less than −65dB (1kHz)

Table 1(b) Specifications for AU–65/63/62 (NTSC)

AU-65/63/62 (PAL)

Video

Television Format:	PAL: 625 lines, 50 fields
Modulation System:	Y: Frequency Modulation C: Time compressed multiplexing
Bandwidth:	
Component Y:	25Hz~5.0MHz, +1.0/−2.0dB
C (P_B, P_R):	25Hz~1.8MHz, +0.5/−2.0dB
S/N Ratio:	
Component Y:	Better than 47dB
Composite Y:	Better than 48dB
C (AM, PM):	Better than 50dB
YC Delay:	Less than 20ns
K Factor:	Less than 2% (Y)
Differential Gain:	Less than 3%
Differential Phase:	Less than 3°
Linearity:	Less than 3% (Component)

Audio

Linear (CH1/CH2)	
Frequency Response:	50Hz~15kHz, +2.0/−3.0dB
S/N Ratio:	Better than 56dB
(at 3% distortion)	(Dolby NR off)
Distortion:	Less than at 1kHz standard
Cross Talk:	Less than −65dB (1kHz)
Erase Ratio (at 1kHz):	Less than −65dB
Wow and Flutter:	Less than 0.15% (DIN WTD)
Phase:	±20° (at 10kHz)
FM (CH3/CH4)	
Frequency Response:	20Hz~20kHz, +1.0/−2.0dB
Dynamic Range:	More than 80dB
Distortion:	Less than 0.5% at 1kHz standard
Cross Talk:	Less than −65dB (1kHz)

Table 1(c) Specifications for AU-65/63/62 (PAL)

1-2. Tape Format

In order to achieve the above-mentioned targets (recording time, frequency response, S/N ratio), we have established the format and its dimensions by total evaluation of the following items:

1) Tape length – tape thickness and cassette size
2) Relative speed – drum diameter
3) Track width
4) FM carrier frequency & deviation
5) Tape CNR (carrier to noise ratio)
(See next page).

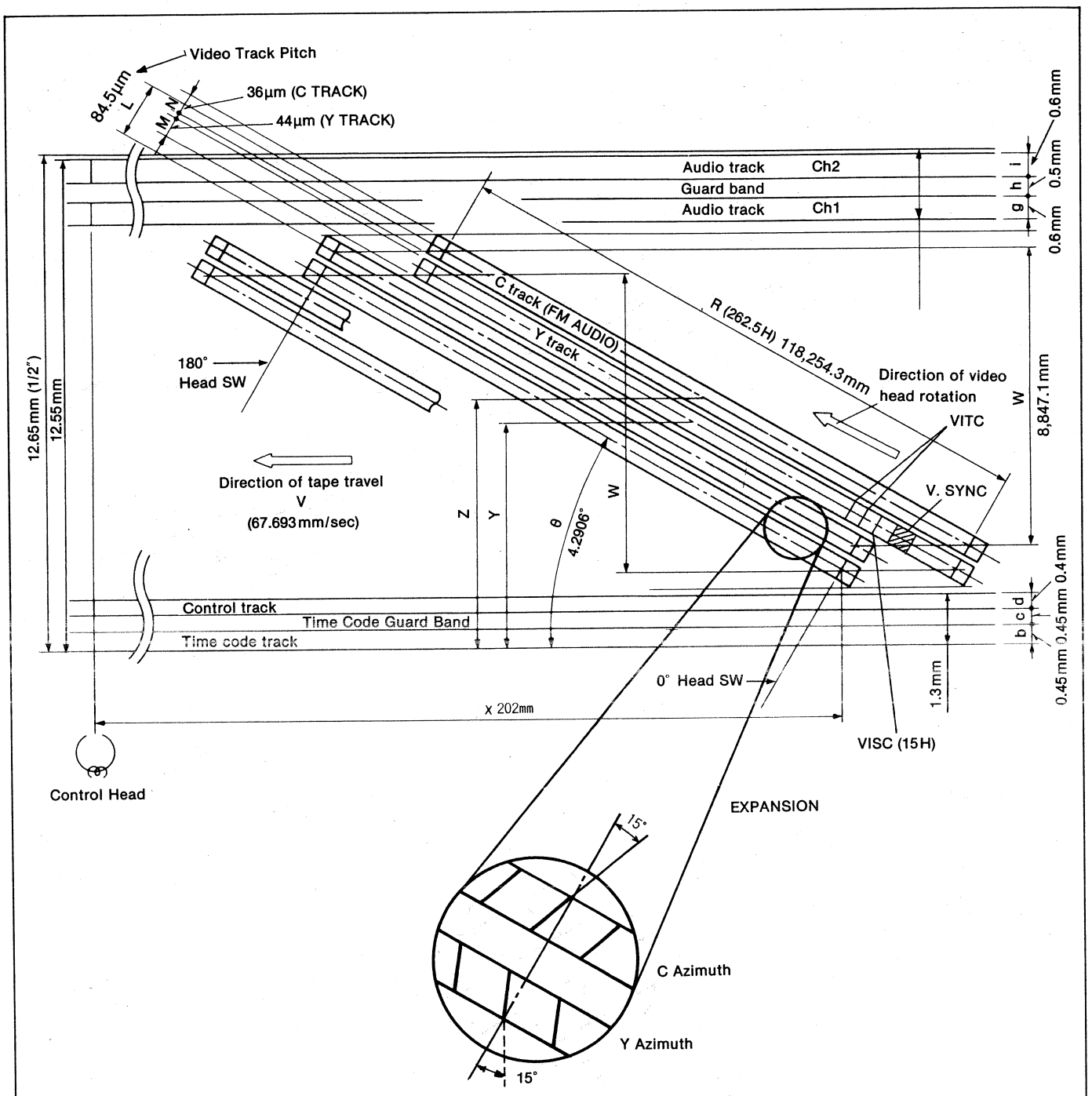

L : Video track pitch	84.5µm	b : Time code track width	450µm
M : Y track width	44µm	c : T/C guard width	450µm
N : C track width (FM Audio)	36µm	d : Control track width	400µm
R : Video track length	118,254.3µm	g : Audio track Ch1 width	600µm
W : Effective video width	8,847.1µm	h : Audio guard width	500µm
Y : Height of Y track center	6,050µm	i : Audio track Ch2 width	600µm
Z : Height of C track center	6,092.1µm	Tape travel speed :	67.693mm/sec
θ : Video track inclination angle	4.2906°	Relative speed :	7.09m/sec
X : Control signal recording position	202,000µm	Tape width :	12.65mm
		αH : H alignment	2.5H

Fig. 2-1(a) MII VTR Tape Format (NTSC)

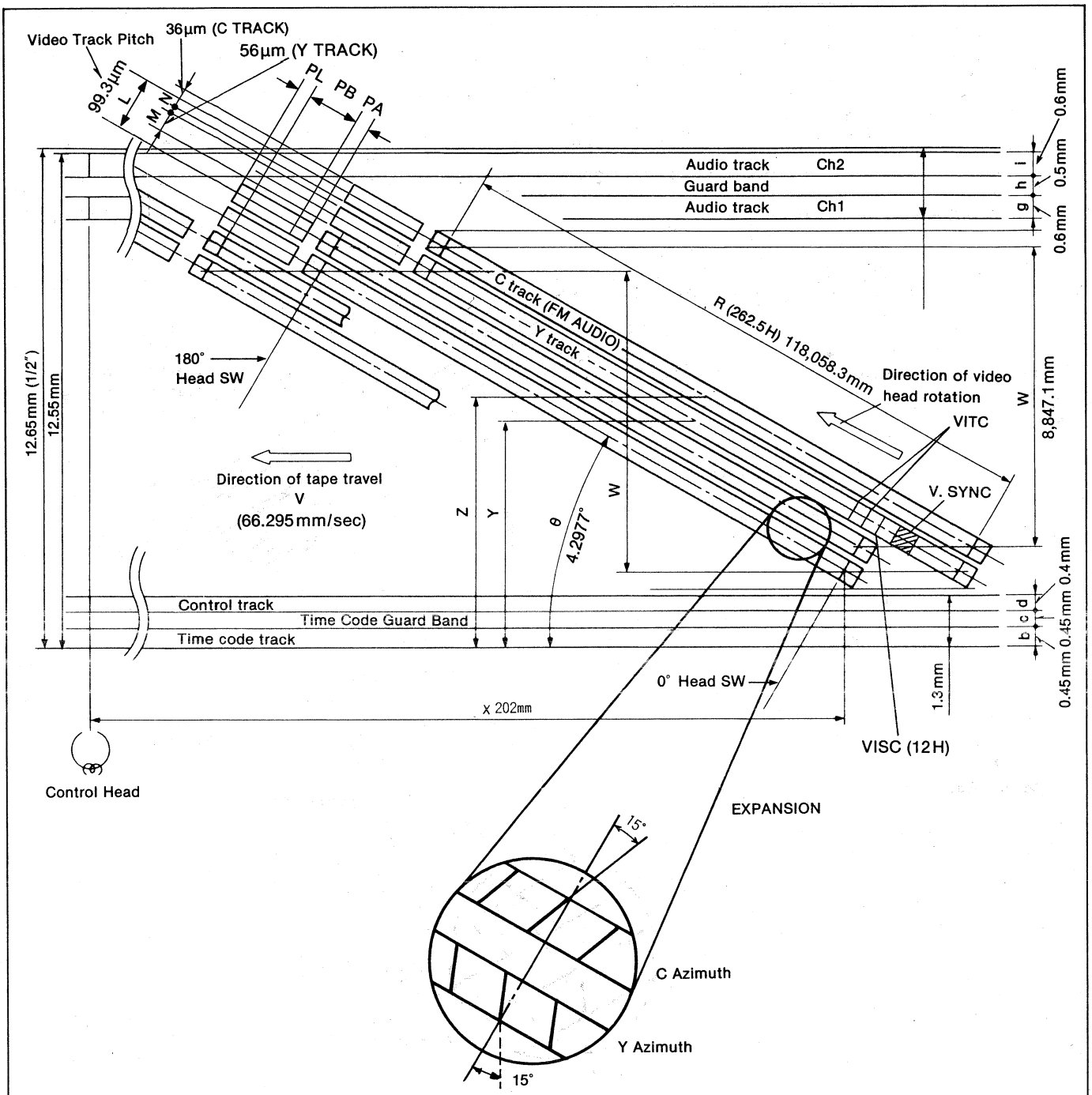

L : Video track pitch	99.3µm	X : Control signal recording position	202,000µm
M : Y track width	56µm	b : Time code track width	450µm
N : C track width (FM Audio)	36µm	c : T/C guard width	450µm
R : Video track length	118,058.3µm	d : Control track width	400µm
W : Effective video width	8,847.1µm	g : Audio track Ch1 width	600µm
Y : Height of Y track center	6,050µm	h : Audio guard width	500µm
Z : Height of C track center	6,099.5µm	i : Audio track Ch2 width	600µm
Θ : Video track inclination angle	4.2977°	Tape travel speed:	66.295mm/sec.
PA: Pre Amble	415.6µm	Relative speed:	5.90m/sec.
PB: Data	11,900.2µm	Tape width:	12.65mm
PC: Post Amble	415.6µm	αH: H alignment	3.5H

Fig. 2-1(b) MII VTR Tape Format (PAL)

2. CASSETTE TAPE AND HEADS

2–1. Cassette

For the determination of cassette size, we took into account the points of recording length and good maneuverability. We decided to employ a size near equivalent to the VHS cassette.

2–2. Employment of metal particle tape, and amorphous heads

To fulfill the requirements of high picture quality as well as 90 minute running time, and a near equivalent to the VHS cassette it was essential to raise the carrier–to–noise signal (CNR) of the tape. In this respect, we employed metal particle tape (13.5 um thick) that has excellent high frequency characteristics (output characteristics, CNR) and is able to ensure sufficient output for longitudinal track recording (audio, control, time code).

To use metal particle tape, we needed to employ amorphous heads as video heads to improve the playback signal to noise ratio. In this way, excellent characteristics were obtained in recording and playback.
Using the new tape and heads, greater reliability characteristics are obtained such as drop–out resistance and endurance.

3. TAPE TRANSPORT SYSTEM

Figure 3–1 shows the tape transport system of the M II Format VTR. In order to assure stable travel of the thin metal particle tape at a speed ranging from 0 (still) – to x(+–32), the angle at which tape is wrapped around inclined fixed posts is minimized. All other guide posts are the rotating type, thereby reducing tape traveling load. Closed tension servo is applied to both supply and take–up reels to accurately control the tape tension and to prevent the tape from being damaged.

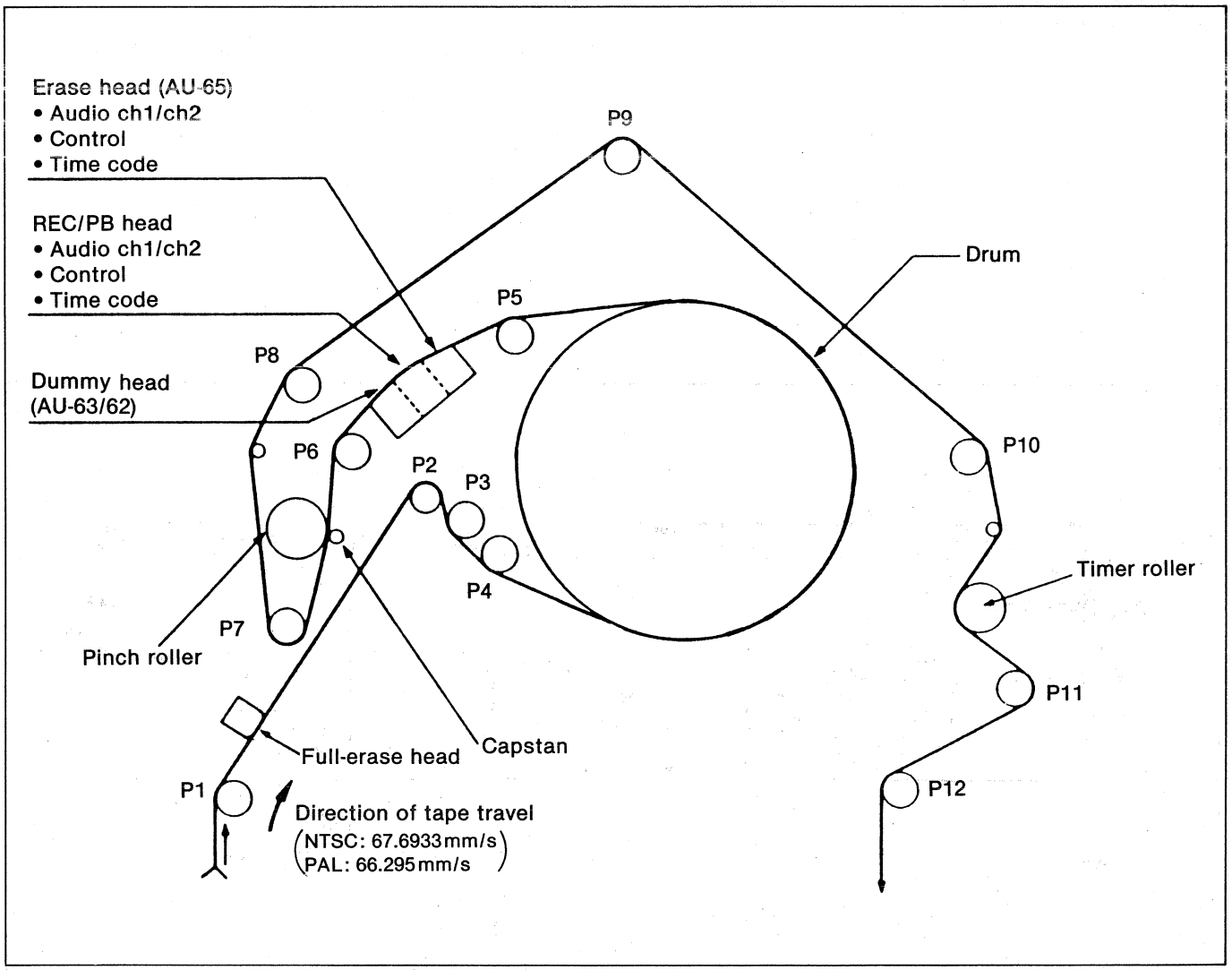

Fig. 3–1 Tape Transport System and Head Arrangement

4. RECORDING & PLAYBACK METHOD

4-1. Video signal process

MII system employs component recording method which has two separate Y and C tracks on the tape for video signal recording.
When making the recording, the incoming composite video signal is first separated by Decoder circuit into Y, Pb and Pr.
These Pb and Pr signals (each horizontal line) are then compressed by CTCM (Chroma Time Compressed Multiplex) circuit into one horizontal line called CTCM signal and it is supplied to FM modulator.
Where as the Y signal is immediately supplied to FM modulator.
The both Y and CTCM signals are separately modulated with FM and recorded at peculiar Y and C tracks on the tape.
During playback mode, the playback RF Y and C signals are demodulated by FM and these are supplied to TBC (Time Base Corrector) circuit.
The TBC carries out the jitter reduction and expansion of CTCM signal to original Pb, Pr signals.
After TBC correction, Y and C signals are encoded into output signal as shown in Figure 4–1.
(Note that the FM audio signal is modulated by FM with the CTCM signal.)

4-2. Time axis compressing and expansion process

For a system in which the time axis used for color difference signals is compressed during recording and is expanded during playback, a highly accurate time base corrector (TBC) is required because the residual jitter increases during expansion. In M II Format, a pilot burst signal for jitter correction is superimposed and recorded during the period of horizontal blanking, and a stable writing clock for the TBC is reproduced in the playback process by the use of horizontal synchronizing and pilot burst signals superimposed and recorded, thereby reducing the residual jitter.

The Y signal is recorded with a pilot burst signal synchronized to the horizontal sync signal and added to its horizontal blanking (back porch). A horizontal sync signal and pilot burst signal are added to the horizontal blanking of the Pb signal. Both signals are separately compressed in time axis and are recorded as a time division multiplex signal.

Time base errors in the playback signal can be removed by using the horizontal synchronizing and pilot burst signals for Y/C timing, solving the problem of timing errors which has been the weak point in the time axis compression recording system. The recording signal waveform of M II format is shown in figure 4–2 (a) or (b).

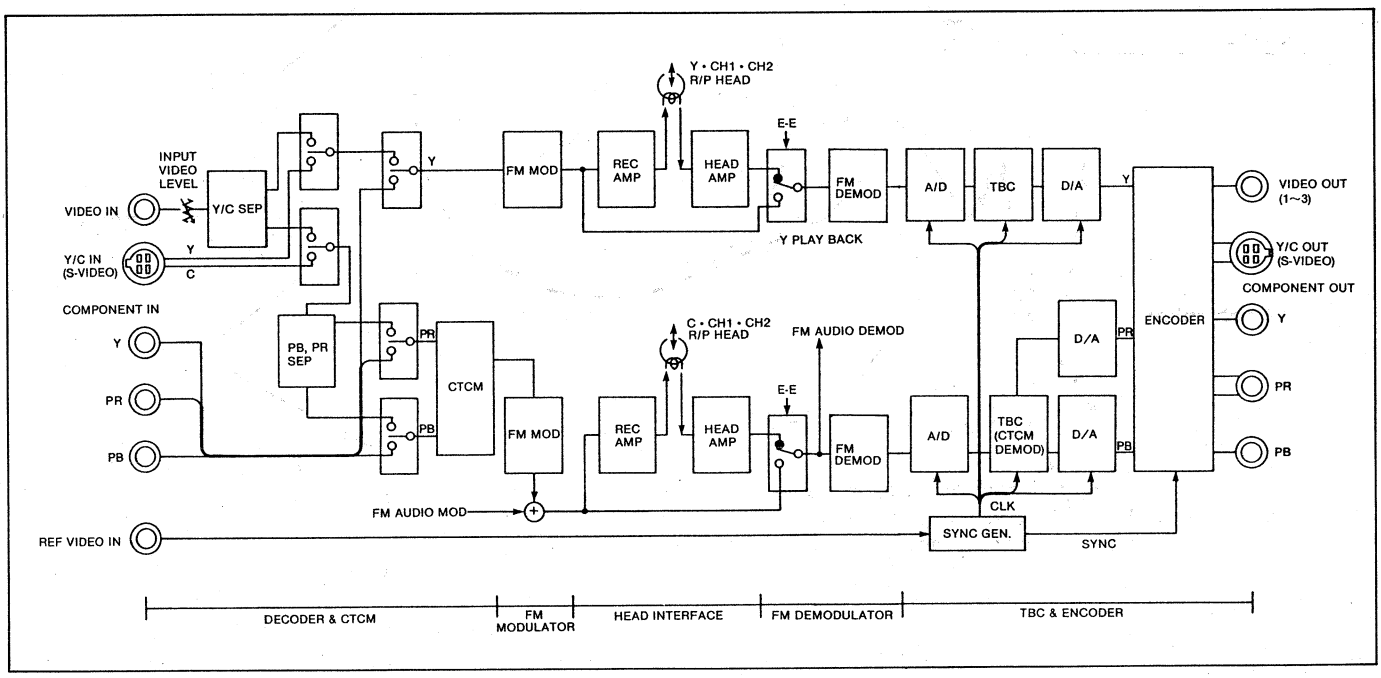

Fig. 4–1 Block Diagram of Video Signal Process

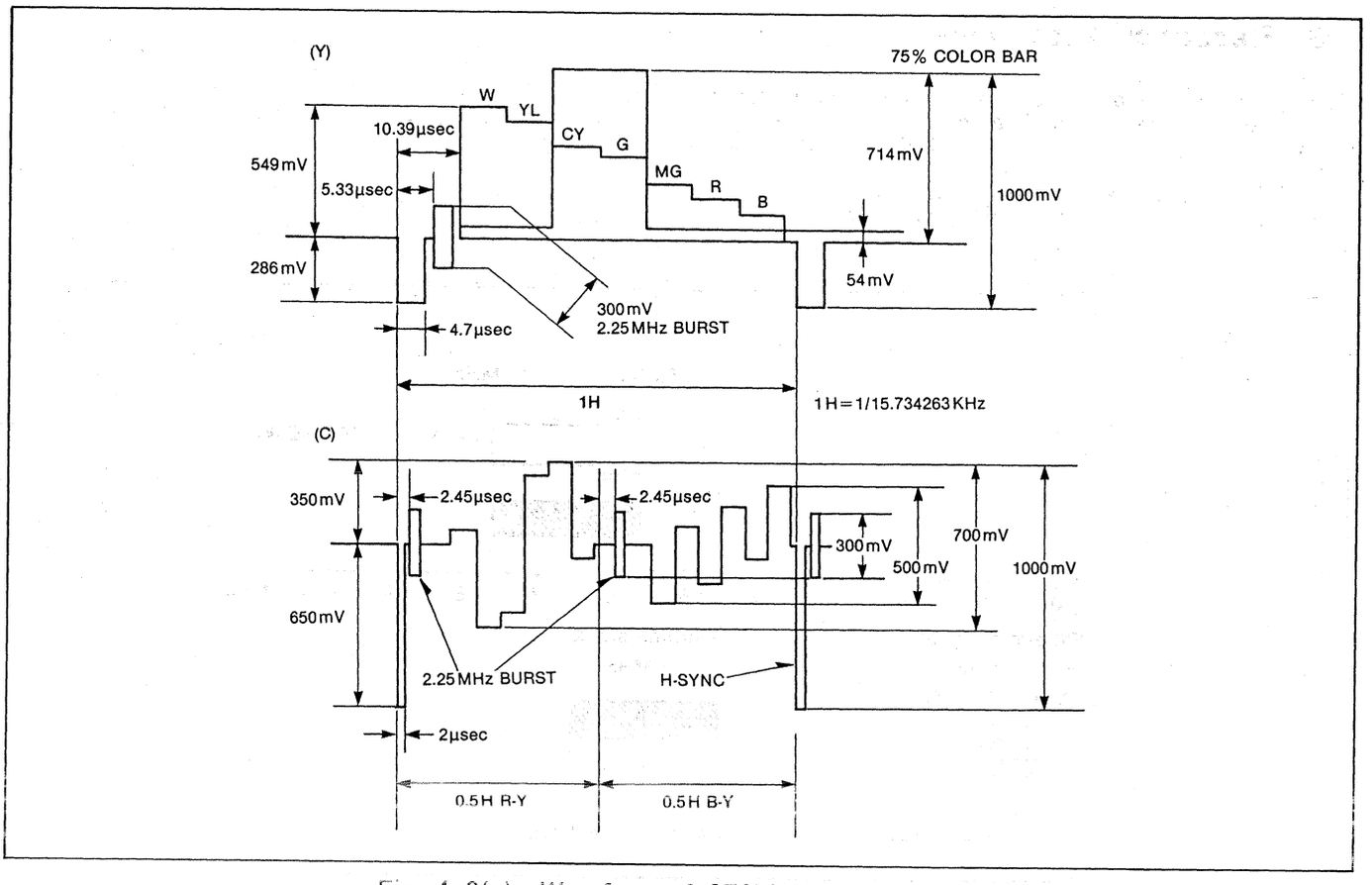

Fig. 4-2(a) Waveform of CTCM Signal (NTSC)

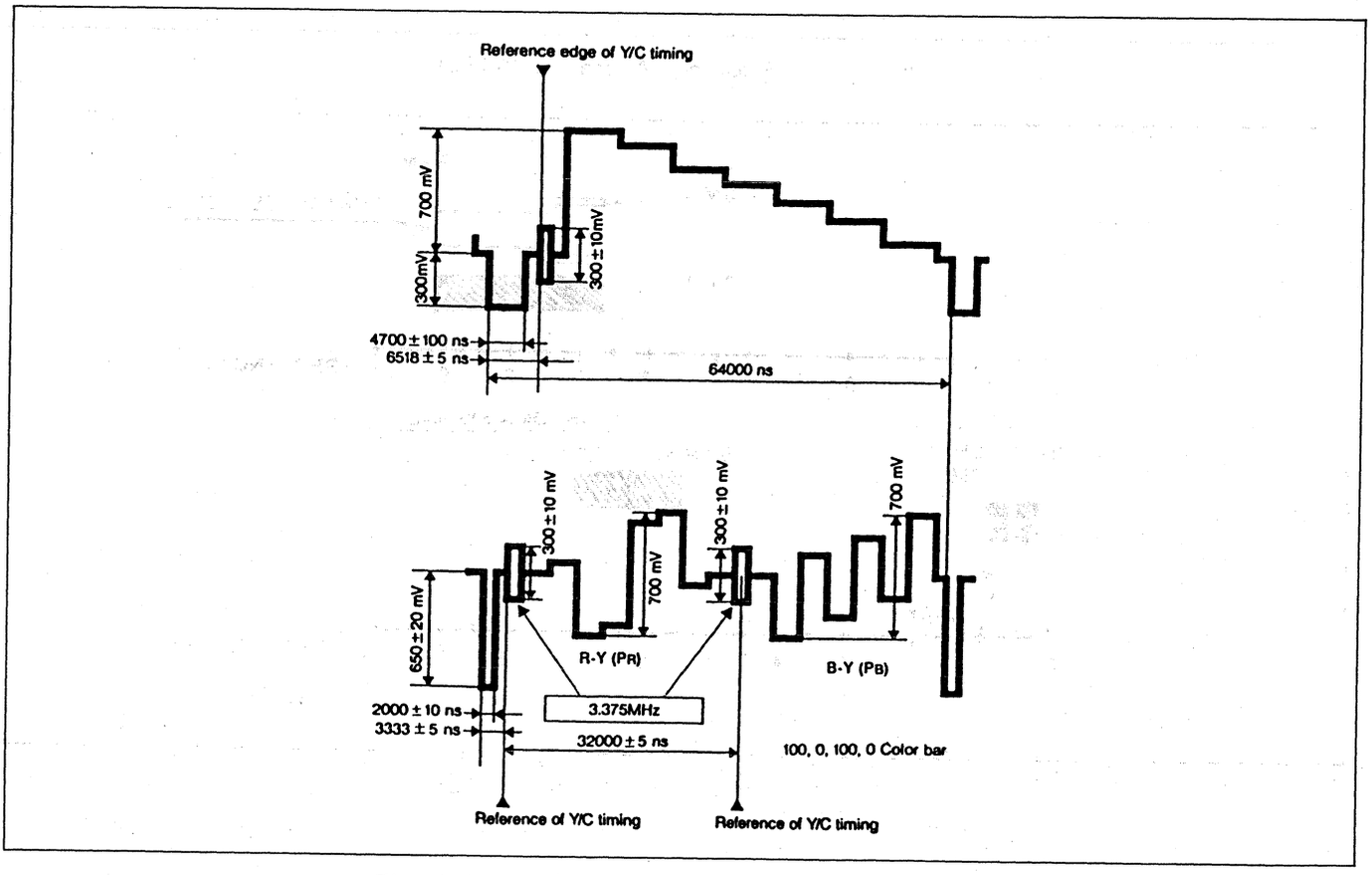

Fig. 4-2(b) Waveform of CTCM Signal (PAL)

4-3. Frequency Allocations

The luminance and compressed CTCM chrominance signal are separately modulated by FM signals as shown in Figure 4–3 (a) or (b) and they are recorded on the tape.
The FM audio signal is also modulated by FM with CTCM chrominance signce as shown in Figure 4–3 (a) or (b).

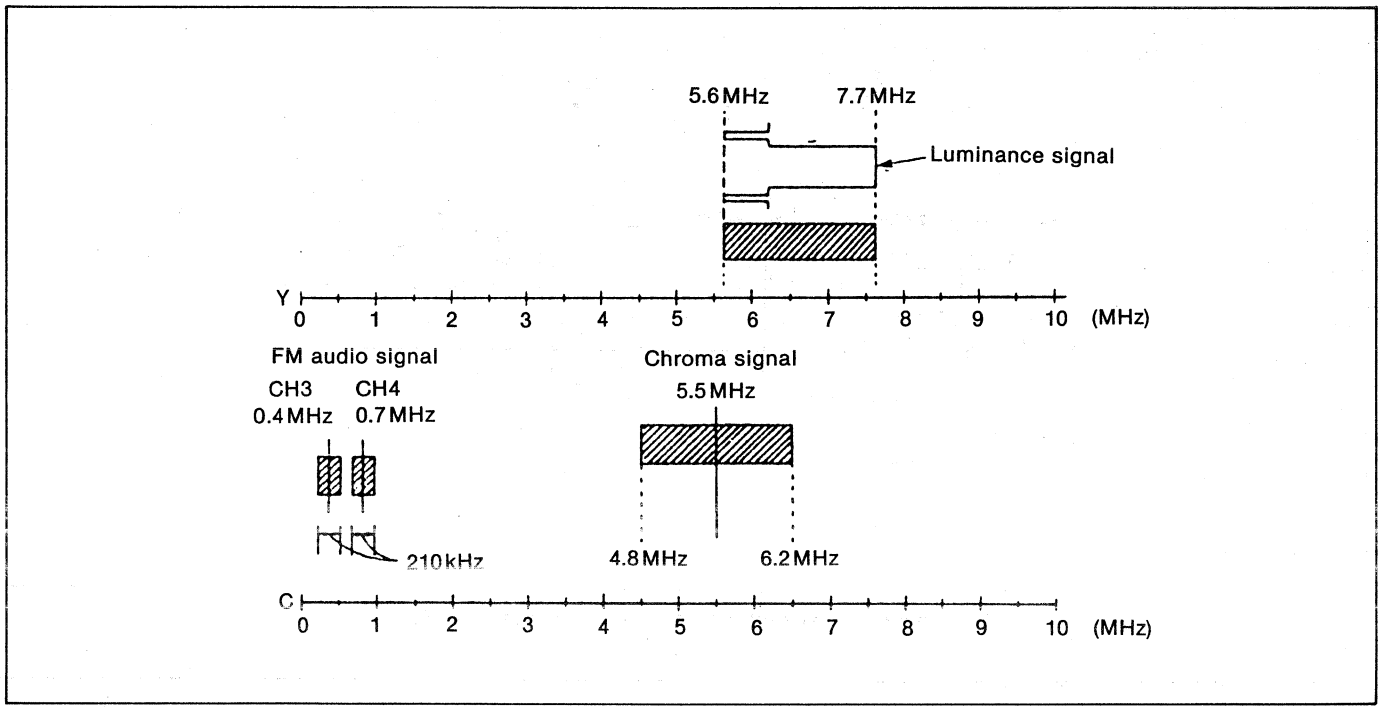

Fig. 4–3(a) Frequency Allocation (NTSC)

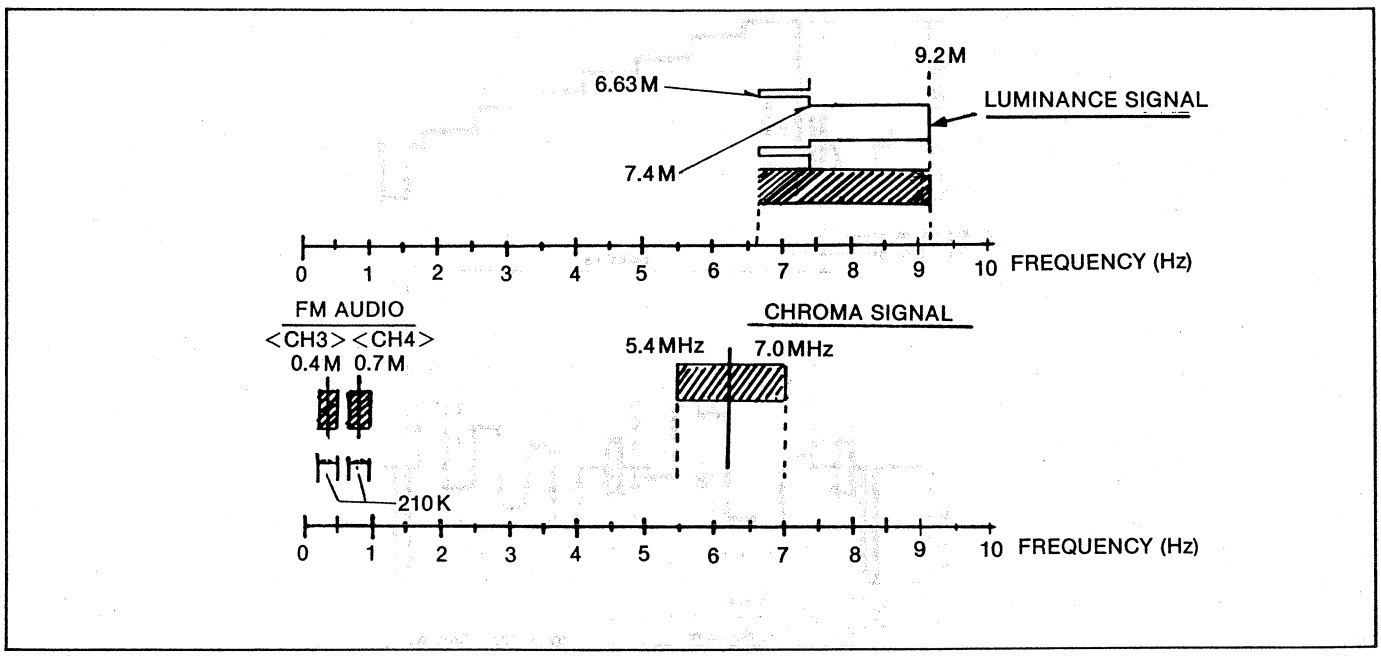

Fig. 4–3(b) Frequency Allocation (PAL)

4-4. Time base corrector (TBC)

Figure 4–4 is the block diagram of the TBC. The TBC consists of A/D, memory, W–PLL, D–A, encoder and SYNC GEN circuit.

1) AU–65, AU–63 and AU–62 (NTSC & PAL)
The TBC has a +/– 16H window. AU–63's TBC is able to output noiseless slow motion since AU–63 has had a auto tracking playback head at speeds of x(–1) to x(+2).
In the A/D block, analog Y and CTCM signals are converted to 8 bit digital signals and are supplied to the memory block.

2) AU–665 (NTSC)
The TBC has a field memory and is able to output noiseless slow motion since auto tracking playback head at speeds of x(–1) to x(+2). The filed memory takes effective many line's drop out compensation.
In addition, when the VISC signal is added to the video signal, the phase of the TBC clock is controlled to match the encoder's sub carrier to the VISC signal.
In the A/D block, analog Y signal is converted 9 bit digital signal and CTCM signal is converted 8 bit digital signal.

The memory block performs video signal processing such as timing adjustments, jitter correction, drop–out correction, interpolation, and averaging. Regarding chrominance signals in particular, level differences are often generated line by line due to clampling errors in time axis compression or level alteration during recording. This may cause line crawling, subcarrier leak or vertical stripe beats in the pictures reproduced. To prevent these problems, it is necessary to perform line averaging of playback Pr and Pb signals. At the same time, field reproduction takes place during auto tracking playback, and line interpolation is performed. Line averaging can be user selected.

In the D/A–ENCODER block, the time axis corrected and expanded PCM signal converted to analog. The color difference signal is subjected to balanced modulation. The Y signal, modulated color signal, and synchronizing signal are added, and this signal is output as a composite video signal.

The W–PLL block performance determines the accuracy concerning residual jitter, vertical sync, and Y/C timing delays between Y, Pb, Pr.

The write clock is generated in one of two ways depending on the presence or absence of azimuth skew error. Without azimuth skew, the write clock is synchronized with playback Y. Y and C are timed to each other via APC and AFC loops to a 54MHz master clock and added H and pilot burst signals. For the C signal, a burst is added to the Pb and Pr components before time compression for accurate reconstruction during playback.

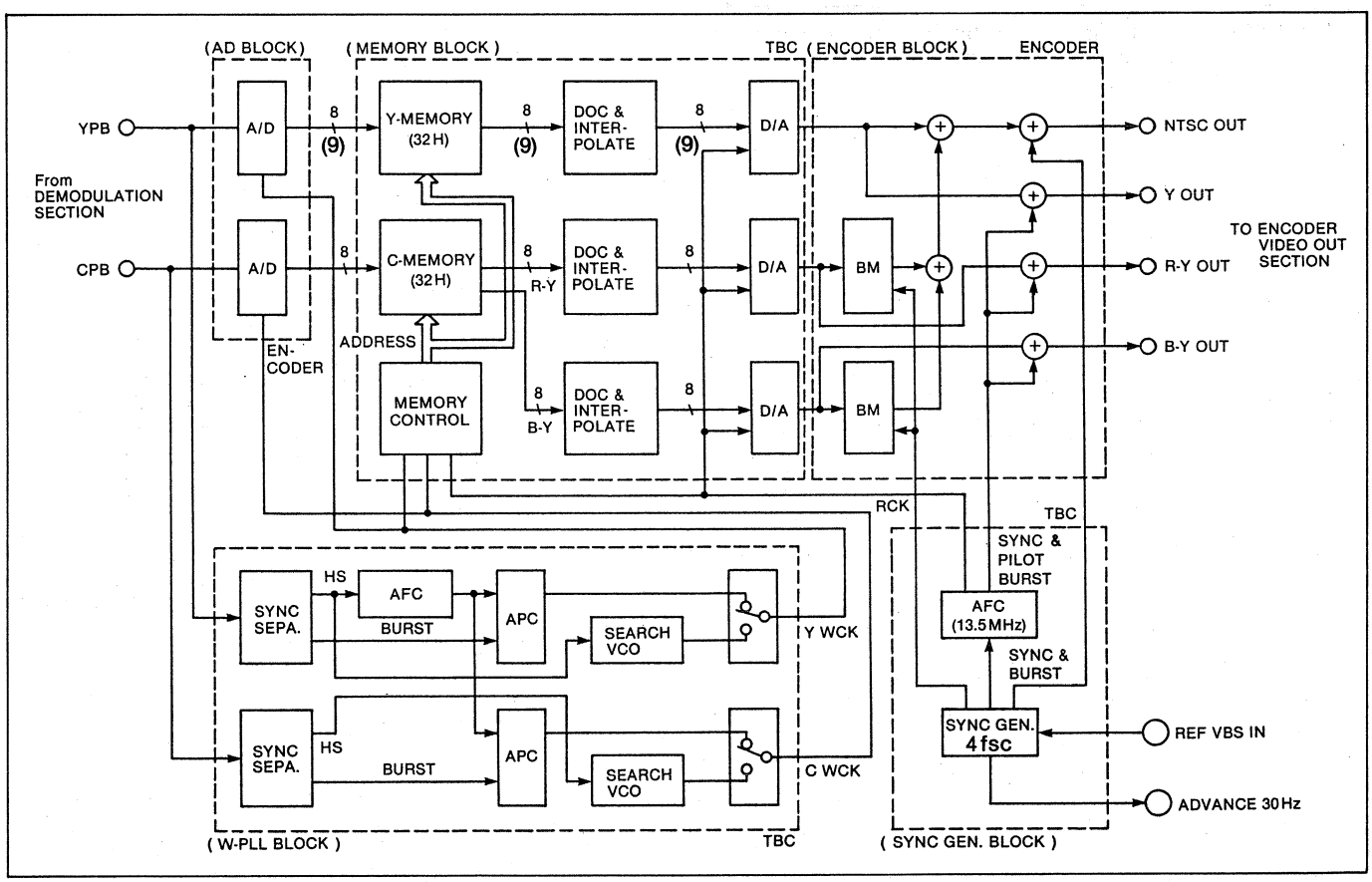

Fig. 4–4 TBC

When azimuth skew exists, the write clock is re-generated by the search VCO and instantaneously phase-locked with each horizontal synchronizing pulse of the Y and C signals.

In addition, this block performs vertical synchro-nizing and interpolation during auto tracking playback.

In the SYNC GENE block, with an external reference video signal applied, the TBC read clock is synchronized with this reference. Various synchro-nizing signals, and servo standard 30 Hz signals corresponding to the changeover of R/P and PLAY heads and of REC/PLAYBACK modes are produced.

5. EDITING SYSTEM

The M II Format VTR has been developed as a broadcast VTR with various editing functions, such as video/audio signal insert editing, assemble editing, audio split editing, preview, and review.

Automatic editing can also be performed by an editing system consisting of a player, a recorder and an editing controller (AU-A65 and AG-A800). The control unit is furnished with 9-pin serial interface (RS-422 standard. And SMPTE protocol) and 50-pin parallel interface connectors can be available as a option (AU-MK25). This MII VTR series is equipped with a high-precision CTL reading circuit. When playing or editing with high-speed search, slow, hog/shuttle, etc., however the system still needs the SMPTE Time Code for highly accurate editing.
For this purpose, the Time Code generator/reader (AU-F65) is optionally available. The AU-F65 is essential to give sophisticated editing tasks.

MAINTENANCE & MECHANICAL ADJUSTMENTS

This section covers the disassembly method, maintenance procedures, and mechanical adjustment procedures.

REGULAR MAINTENANCE

The MII-VTR is a complex piece of equipment. It contains many posts, rollers and heads etc. Which may wear with pro-longed use. Dust and dirt will also affect the operation of the machine. It is very important that requlars preventive maintenance (PM) is carried out according to the maintenance chart. This will ensure reliablility, and the machine's specification.

Preventive maintenance should also be performed after any repairs are carried out on the equipment.

Panasonic

CONTENTS

AU-665/65/63/62 MAINTENANCE PARTS LOCATION 3-1
MAINTENANCE CHART 3-2
MAINTENANCE HOURS 3-3
SERVICING FIXTURES & TOOLS 3-4
OPTIONAL TOOLS 3-6
PURPOSE OF MAINTENANCE TOOLS FOR STUDIO VTR 3-7
1. DISASSEMBLY METHOD 3-8
3. MAJOR MECHANISM PARTS REPLACEMENT PROCEDURES 3-9
3-1. GENERAL 3-9
3-2. UPPER DRUM REPLACEMENT 3-9
3-3. DRUM UNIT REPLACEMENT AND ADJUSTMENT 3-14
3-4. CLEANER ROLLER REPLACEMENT AND ADJUSTMENT 3-16
3-5. PINCH ROLLER ARM UNIT REPLACEMENT 3-17
3-6. LOADING MOTOR BELT REPLACEMENT 3-17
3-7. FRONT LOADING MOTOR BELT REPLACEMENT 3-18
3-8. TENSION UNIT REPLACEMENT AND ADJUSTMENT 3-18
3-9. REEL STAND UNIT REPLACEMENT AND ADJUSTMENT 3-23
3-10. A/C HEAD REPLACEMENT 3-24
3-11. FULL ERASE HEAD REPLACEMENT AND ADJUSTMENT 3-32
3-12. CAPSTAN HOUSING UNIT REPLACEMENT AND ADJUSTMENT 3-33
3-13. PINCH ROLLER SOLENOID REPLACEMENT AND ADJUSTMENT ... 3-34
3-14. PINCH PRESS LEVER REPLACEMENT AND ADJUSTMENT 3-35
3-15. TIMER ROLLER REPLACEMENT AND ADJUSTMENT 3-35
3-16. POST ROLLER UNIT REPLACEMENT AND AND ADJUSTMENT 3-37
3-17. IP BASE UNIT (with P10 POST) REPLACEMENT AND ADJUSTMENT ... 3-43
3-18. SUB LOADING SW REPLACEMENT AND ADJUSTMENT 3-44
3-19. BRAKE UNIT AND BRAKE SOLENOID REPLACEMENT 3-44
3-20. LOADING MOTOR REPLACEMENT 3-45
3-21. SMALL CASSETTE MOTOR REPLACEMENT AND ADJUSTMENT 3-46
3-22. FRONT LOADING MOTOR REPLACEMENT 3-47
3-23. RECORDING INHIBIT MICROSWITCH REPLACEMENT 3-47
3-24. RING ROLLER ADJUSTMENT 3-47
3-25. LOADING COMPLETION DETECT SENSOR POSITION ADJUSTMENT ... 3-47
3-26. UNLOADING COMPLETION DETECT SENSOR POSITION ADJUSTMENT ... 3-48
3-27. POSITION OF P1 POST DRIVE ROD 3-48
3-28. CASSETTE UP AND DOWN SWITCHES ADJUSTMENT 3-48
3-29. FRONT LOADING U. LEAF SWITCH REPLACEMENT AND ADJUSTMENT ... 3-49
3-30. SMALL CASSETTE LEAF SWITCH REPLACEMENT AND ADJUSTMENT ... 3-49
3-31. TURN ROLLER ARM UNIT REPLACEMENT 3-50
3-32. CAM GEAR REPLACEMENT AND ADJUSTMENT 3-51
3-33. CARRIAGE ILLUMINATION LAMP REPLACEMENT 3-52
3-34. FAN MOTOR REPLACEMENT 3-53
3-35. EJECT SWITCH REPLACEMENT 3-53
3-36. POWER SWITCH REPLACEMENT..... 3-54

REGULAR MAINTENANCE

REGULAR MAINTENANCE

The purpose of periodic maintenance is to preserve the reliability of this machine throughout its useful life. The user or service dealer should perform these maintenance procedure regularly to ensure that maximum performance is obtained from the machine.

REGULAR MAINTENANCE IS NECESSARY

The VCR is a complicated piece of equipment. It contains many rollers, heads etc., which become worn as time goes by, causing trouble. Dust and dirt will also impede the proper functioning of the machine. In light of this, it is very important that overall maintenance be done according to the maintenance chart to maintain the functions of the VCR, and to avoid accidental problems. This maintenance should also be performed after any repairs are done on the equipment.

REGULAR MAINTENANCE IS RECOMMENDED

The VCR used for broadcast and professional applications requires particular attention for several reasons. The installation conditions and applications are not always the best. Long use times, or poor environmental conditions may adversely affect the lifespan and performance of the machine. Regular maintenance assures that the purchaser obtains the maximum value for this expenditure.

MAINTENANCE PARTS LOCATION

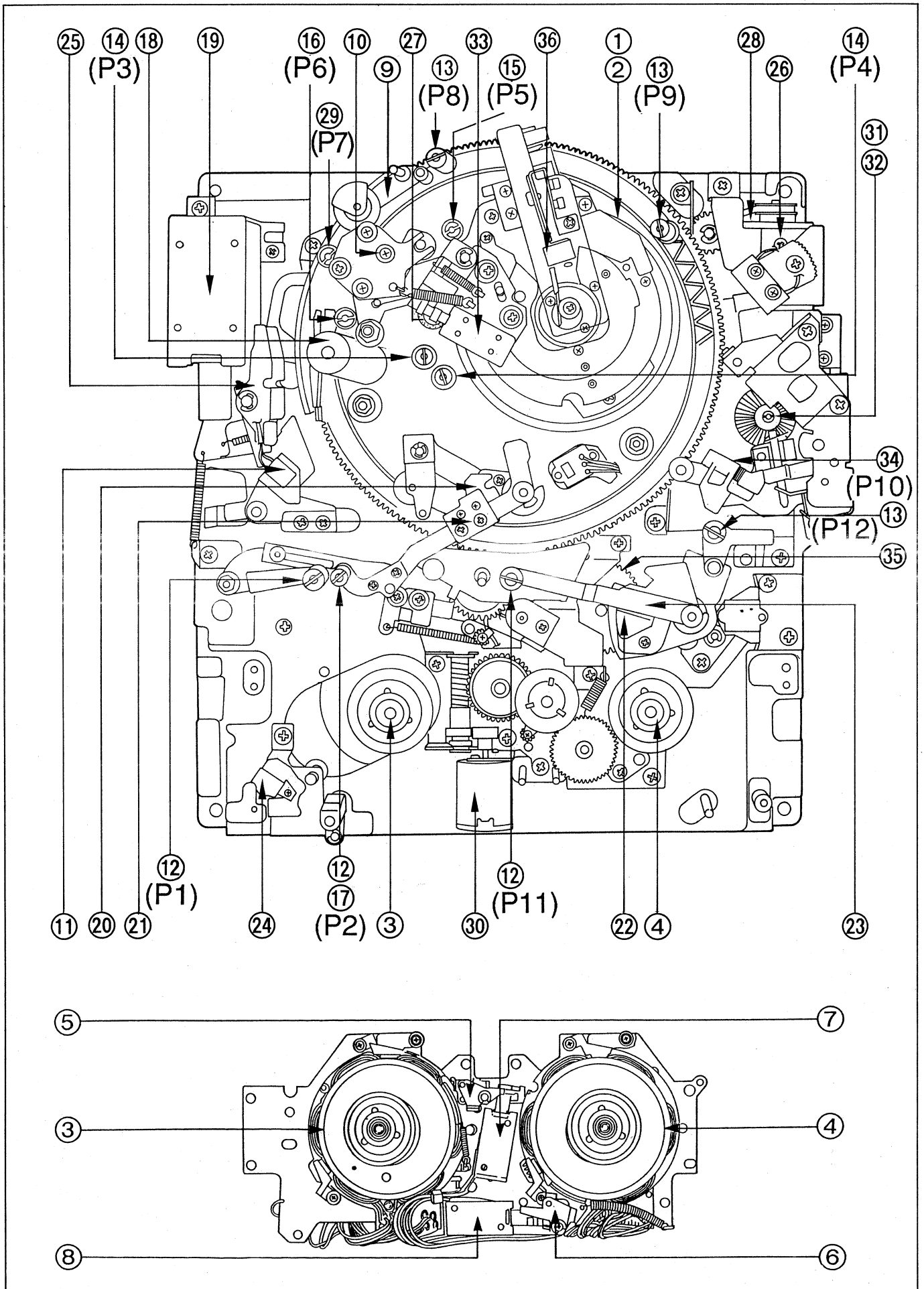

MAINTENANCE CHART

<AU-65/63/62/665> ◎:for M.A.R.C (CART) ●:Replacement ☆:Conf. or Adj. ※:Grease Up ○:Cleaning

Part Name	Part No.	Pcs/ Unit	Location No.	Using Hours 1500	3000	4500	6000	7500	9000	10500	12000	15000	24000
Upper Drum (AU-65/62 NTSC)	VEH0475	1	1	Refer to Head Tip Measurment Procedure									
Upper Drum (AU-63 NTSC)	VEH0482	1	1										
Upper Drum (AU-665 NTSC)	VEH0375	1	1										
Upper Drum (AU-65/62 PAL)	VEH0494	1	1										
Upper Drum (AU-63 PAL)	VEH0495	1	1										
Drum Unit (AU-65 NTSC) with Brush Unit	VEG0780	1	2										
Drum Unit (AU-62 NTSC) with Brush Unit	VEG0804	1	2										
Drum Unit (AU-63 NTSC) with Brush Unit	VEG0806	1	2										
Drum Unit (AU-665 NTSC) with Brush Unit	VEG0805	1	2										
Drum Unit (AU-65 PAL) with Brush Unit	VEG0837	1	2										
Drum Unit (AU-62 PAL) with Brush Unit	VEG0838	1	2										
Drum Unit (AU-63 PAL) with Brush Unit	VEG0839	1	2										
S-Reel Stand Unit	VXR0191	1	3				●				●		●
T-Reel Stand Unit	VXR0191	1	4				●				●		●
Supply Brake Unit	VXA4004	1	5				◎				●		●
Take up Brake Unit	VXA4005	1	6				◎				●		●
Supply Brake Solenoid	VSJ0097	1	7				◎				●		●
Take up Brake Solenoid	VSJ0098	1	8				◎				●		●
Pinch Arm Unit	VXL1288	1	9	●	●	●	●	●	●	●	●	●	●
A/C Head Unit (AU-65 NTSC, PAL)	VED0140	1	10				●				●		●
A/C Head Unit (AU-63/62 NTSC, PAL)	VED0142	1	10				●				●		●
A/C Head Unit (AU-665 NTSC)	VED0143	1	10				●				●		●
Full Erase Head (AU-65 NTSC, PAL / AU-665 NTSC)	VBS0024	1	11				●				●		●
Full Erase Head (AU-62/63 NTSC PAL)	VBS0043	1	11				●				●		●
Post Roller with Bearing P1, P2, P11	VXP0820	3	12								●		●
Post Roller with Bearing P8, P9, P12	VXP0821	3	13										●
Post Roller with Bearing P3, P4	VXP0823	2	14								●		●
Post Roller with Bearing P5	VXP0824	1	15								●		●
Post Roller with Bearing P6	VXP0819	1	16								●		●
P2 Upper Flange	VMS4572	1	17								●		●
Capstan Housing Unit	VXD0110	1	18				●				●		●
Pinch Solenoid	VSJ0069	1	19				●				●		●
S-Stopper Pin Base Unit	VXA2302	1	20		●		●		●		●	●	●
S-Tension Spring Plate	VMC0119	1	21		●		●		●		●	●	●
T-Stopper Pin Base Unit	VXA4013	1	22		●		●		●		●	●	●
T-Tension Arm Unit	VXL1991	1	23		●		●		●		●	●	●
Recording Inhibit Microswitch	EVQWUS002	1	24		◎		●		◎		●	◎	●
Pinch Press Lever Unit	VXL1679	1	25		◎		●		◎		●	◎	●
Leaf Switch (for small cassette)	VSH0026	2	----				◎				●		●
Leaf Switch (for front loading)	VSH0026	1	----		◎		●		◎		●	◎	●
Loading Motor	VRD0030	1	26				◎				●		●
Front Loading Motor	VEM0228	1	----				◎				●		●
Cleaner Roller	VMT0321	1	27	●	●	●	●	●	●	●	●	●	●
Sub Loading Switch	VSM0042	1	----								◎		●
Cassette Up Down Switch	VSM0048	2	----		◎		●		◎		●	◎	●
Loading Motor Belt	VDV0156	1	28	●	●	●	●	●	●	●	●	●	●
Front Loading Motor Belt	VDV0157	1	----	●	●	●	●	●	●	●	●	●	●
Turn Roller Arm Unit (with P7 Post)	VXL1754	1	29				◎				●		●
Small Cassette Motor	VEM0264	1	30								◎		●

<AU-65/63/62/665> ◎:for M.A.R.C (CART) ●:Replacement ☆:Conf. or Adj. ※:Grease Up ○:Cleaning

Part Name	Part No.	Pcs/ Unit	Location No.	Using Hours 1500	3000	4500	6000	7500	9000	10500	12000	15000	24000
Timer Roller Unit	VXP1183	1	31				●				●		●
Timer Roller (Bearing)	VDB0778	2	32				●				●		●
Fan Motor	VRF0061	1	----		●		●		●		●	●	●
Eject Switch	VSP0221	1	----				●				●		●
Power Switch (NTSC)	EST15372T	1	----								●		●
Power Switch (PAL)	EST15367S	1	----								●		●
Cleaner Solenoid	VSJ0096	1	33				◎				●		●
IP Base Unit (with P10 Post)	VXR0131	1	34				●				●		●
Cam Gear	VDG0669	1	35					◎				●	
Carriage Illumination Lamp	VLL0019	3	----	●	●	●	●	●	●	●	●	●	●
Gears	-----	----	----		※		※		※		※	※	※
Ring Roller	-----	----	----				○				○		○
Brake Torque	-----	----	----				☆				☆		☆
Tape Tention	-----	----	----		☆		☆		☆		☆	☆	☆
Brush Unit	-----	----	36	○	○	○	○	○	○	○	○	○	○

MAINTENANCE HOURS

When you want to know the replacement time, the HOUR METER function is used.

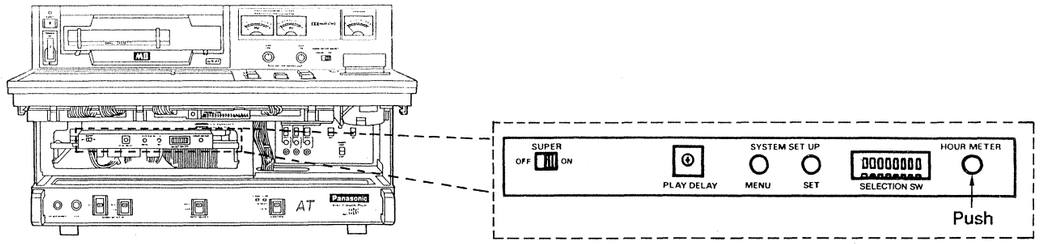

When this button is pushed, the accumulated "total power-on" time and "total drum rotation" time are displayed in 10 hours units as shown below.

SUPER INPOSE

```
HOUR METER
  POWER ON        00350 HOURS
  DRUM ON         00170 HOURS
```

FRONT PANEL

```
LTCR  00 : 00 : 00 00   P00350H   D00170H
EJECT
```

Servicing Fixtures & Tools for Model AU-665/65/63/62 Tool Kit No. VFK0356C

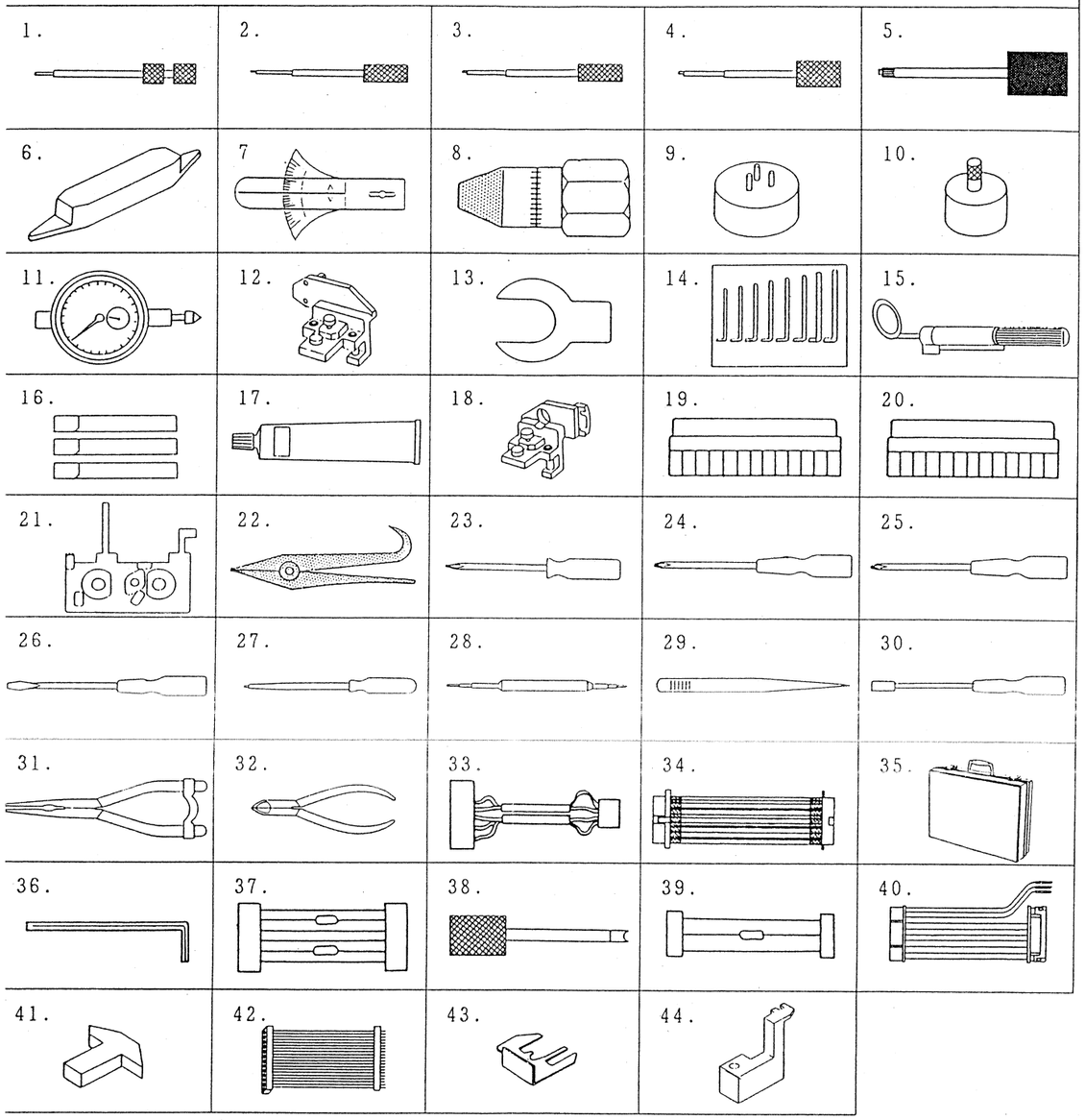

CONTENTS OF MII TOOL KIT

Ref. No.	Part No.	Q'tty	Tool Name	AU-665	AU-65/ 63/62	AU-410 /410S	AU-520 /520S
1	VFK0293	1	Post Driver	v	v	v	v
2	VFK0357	1	Eccentric Driver (1)	v	v	v	v
3	VFK0358	1	Eccentric Driver (2)	v	v		v
4	VFK0359	1	Eccentric Driver (3)	v	v		
5	VFK0446	1	Fine Adj. Driver	v	v	v	v
6	VFK0363	1	Post Height Fixture	v	v		

Ref. No.	Part No.	Q'tty	Tool Name	AU-665	AU-65/ 63/62	AU-410 /410S	AU-520 /520S
7	VFK66	1	Tension Gauge	v	v		
8	VFK0133	1	Dial Torque Gauge	v	v	v	v
9	VFK0134	1	Adaptor for VFK0133	v	v	v	v
10	VFK0354	1	Adaptor for VFK0133			v	v
11	VFK0325	1	Dial Gauge	v	v	v	v
12	VFK0287	1	Head Adj. Plate	v	v		
13	VFK0296	1	RT Gap Spacer	v	v	v	v
14	VFK0326	1	Hex Wrench Set	v	v	v	v
15	VFK0343	1	Check Light	v	v	v	v
16	VFK27	1	Head Cleaning Stick	v	v	v	v
17	MOR265	1	Morlyton Grease	v	v	v	v
18	VFK0353A	1	Head Adj. Plate			v	
19	VFK0361	1	Dummy Plug (1) Large Cassette Simulation	v	v		
20	VFK0362	1	Dummy Plug (2) Small Cassette Simulation	v	v		
21	VFK0352	1	Mech Neutral Adj. Plate	v	v		
22	VFK0335	1	Retaining Remover	v	v	v	v
23	VFK0473	1	Philips Driver (Magnet)	v	v	v	v
24	VFK0337	1	Philips Driver (Large)	v	v	v	v
25	VFK0366	1	Philips Driver (Small)	v	v	v	v
26	VFK0367	1	Screw Driver	v	v	v	v
27	VFK0338	1	Trimmer Adj. Driver	v	v	v	v
28	VFK0368	1	Core Adj. Driver	v	v	v	v
29	VFK0369	1	Tweezers	v	v	v	v
30	VFK0370	1	Nut Driver (5.5m/m)	v	v		
31	VFK0371	1	Radio Prier	v	v	v	v
32	VFK0372	1	Cutter Prier	v	v	v	v
33	VFK0364	1	A/C Head Adj. Connector			v	
34	VFK0533	1	Extension Cable				
35	VFK0355A	1	Tool Box Case	v	v	v	v
36	VFK0410	1	Hex Wrench			v	v
37	VFK0386	1	A/R Bias Cur. Connector				v
38	VFK0329	1	Post Driver			v	v
39	VFK0411	1	LTC REC Cur. Connector			v	v
40	VFK0425	1	Syncro Connector				v
41	VFK0438	1	P2 Post Adj. Fixture	v	v		
42	VFK0470	1	Extension Cable Set	v	v	v	v
43	VFK0444	1	A/C Head Adj. Plate				
44	VFK0599	1	Pinch Jig A			v	v

OPTIONAL TOOL

1. VFM7087EAG (NTSC)
   Alignment Tape

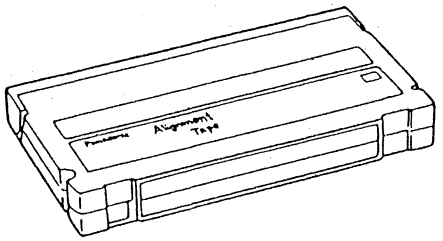

2. VFM7180EG (PAL)
   Alignment Tape

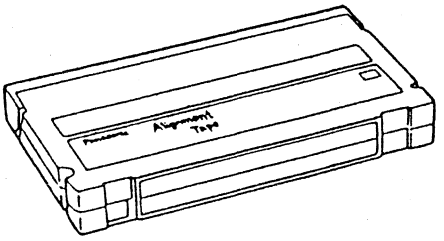

3. VFM0132
   Back Tension Meter

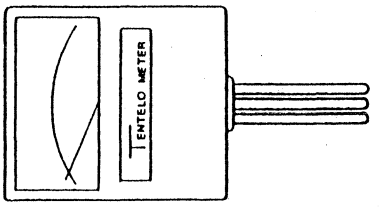

4. VFK0601
   B Extension Board

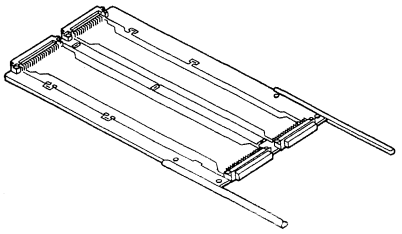

5. VFK0676
   Nut Driver (7m/m)

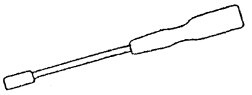

Ref. No.	Part No.	Q'tty	Tool Name	AU-665	AU-65/ 63/62	AU-410 /410S	AU-520 /520S
1	VFM7087EAG	1	Alignment Tape (NTSC)	v	v		v
2	VFM7180EG	1	Alignment Tape (PAL)	v	v		v
3	VFK0132	1	Back Tension Meter	v	v	v	v
4	VFK0601	1	B Extension Board		v		
5	VFK0676	1	Nut Driver (7m/m)	v	v		

PURPOSE OF MAINTENANCE TOOL for STUDIO VTR

Part No.	Purpose
VFK0293	Post Height Adjustment Timer Roller Height Adjustment
VFK0357	Tape Tension Adjustment
VFK0358	A/C Head Horizontal Position Adjustment Tape Tension Adjustment Timer Roller Position Adjustment Pinch Roller Solenoid Adjustment P1 Post Drive Rod Adjustment
VFK0359	Magnet Sensor Base Position Adjustment
VFK0446	Leaf Switch Adjustment Loading Completion Detect Photo Sensor Position Adjustment Unloading Completion Detect Photo Sensor Position Adjustment Cassette Detect Sensor Adjustment
VFK0363	Post Height Adjustment
VFK66	Pinch Roller Solenoid Adjustment
VFK0133, VFK0134	Brake Torque Confirmation
VFK0325, VFK0287	Upper Drum Adjustment
VFK0296	Slip Ring Clearance Adjustment
VFK0326	A/C Head Adjustment Slip Ring Clearance Adjustment P10 Post Adjustment
VFK0343	Tape Interchangeability Adjustment
VFK27	Video Head Tip Cleaning
VFK0361	Large Cassette Simulation
VFK0362	Small Cassette Simuilation
VFK0352	Tape Interchangeability Adjustment Tape Tension Adjustment
VFK0132	Tape Tension Adjustment

1. DISASSEMBLY METHOD

HALF LOADING FOR A/C HEAD CLEANING

To clean the A/C Head (move pinch assy a side), press the JOG or SHTL buttons. To return to unload position, press the EJECT button.

TOP PANEL

1. Remove power cord from unit before disassembly.
2. Remove the 4 screws and remove the top panels.

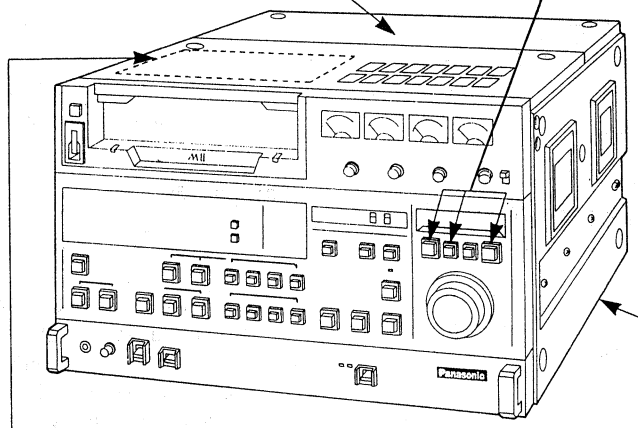

FRONT LOADING (CARRIAGE) UNIT

1. Remove the 4 screws (F) and loosen the 2 silver screws (G) then pull the front panel forward.
2. Remove the 4 screws (B) and remove the carriage fix plate.
3. Remove the 2 screws (C) on the chassis as shown in figure.
4. Turn the front loading motor by hand until front loading is completed. (To expose screws "D")
5. Remove the 2 screws (D) and connector (E).
6. Turn the front loading motor by hand until eject condition is completed and then carefully lift the cassette compartment (CARRIAGE) unit up and remove.

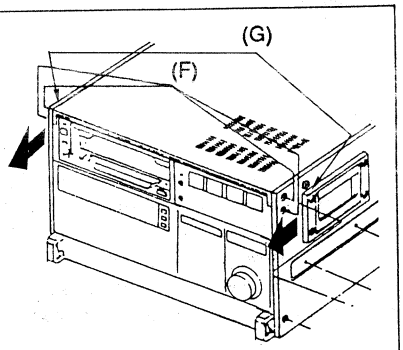

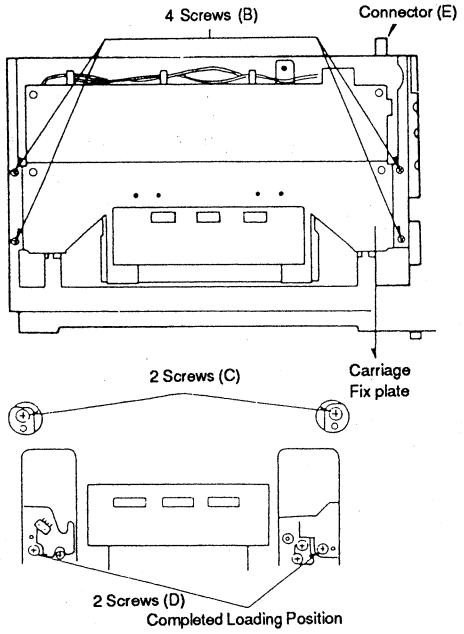

BOTTOM PANEL

1. Unscrew the 8 screws (A) and remove the bottom panel (B).

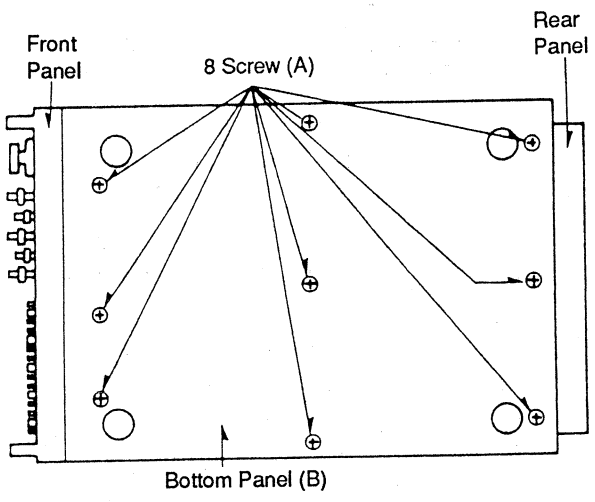

3. MAJOR MECHANISM PARTS REPLACEMENT PROCEDURES

3-1. GENERAL

When mechanical parts are replaced, pay attention to the following notes:

(1) Always turn the power off before replacing any parts.
(2) If any adjustment is necessary after the part is replaced, perform the adjustment after replacement.
(3) Use proper hand tools of fixtures.
(4) Be sure to clean the Parts after replacement.

Also when the mechanical parts are replaced, follow the replacement procedures.

3-2. UPPER DRUM REPLACEMENT

Tools Required:
Head Adjustment Plate (VFK0287)
Dial Gauge (VFK0325)
RT Gap Spacer (VFK0296) for AU-665
Hex Wrench (1.27mm 2mm 2.5mm)

3-2-1. Replacement

Removal

<For AU-65/62>

1. Unscrew the 2 screws (A) and remove the cleaner roller unit as shown in figure 3-2-1.
2. Unscrew the 2 screws (B) and remove the earth brush unit as shown in figure 3-2-1.
3. Unscrew the 2 screws (C) and unsolder 12 lead wires of upper drum unit as shown in figure 3-2-2.
4. Remove the upper drum unit.

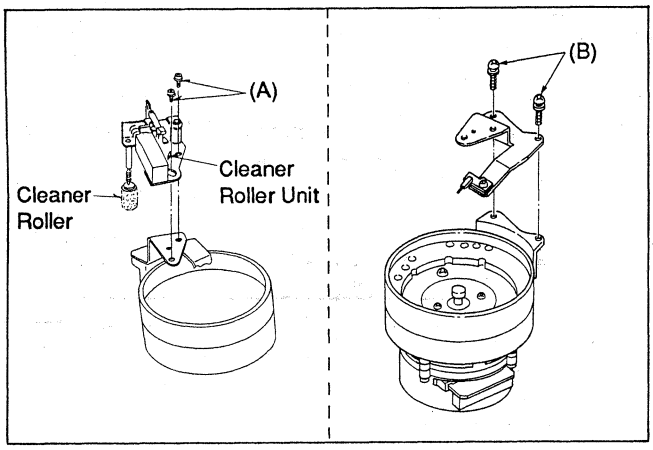

Fig. 3-2-1 Cleaner Roller and Earth Brush Unit

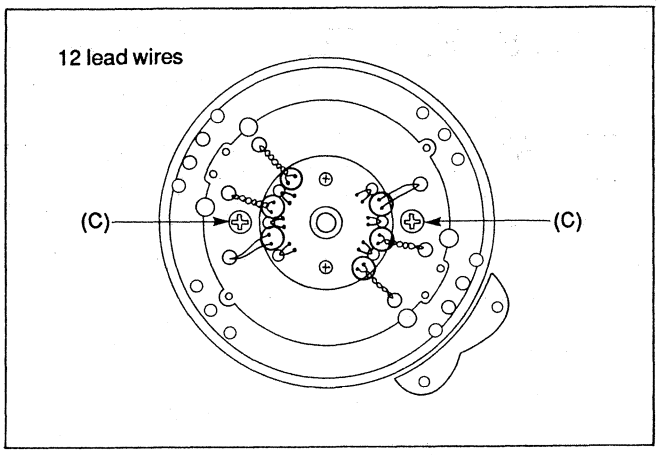

Fig. 3-2-2 Lead Wires of Upper Drum

<For AU-63>

1. Unscrew the screw (A) and remove the brush cover as shown in figure 3-2-3.
2. Unscrew 2 screws (B) and remove the cleaner roller unit as shown in figure 3-2-3.
3. Unscrew the 2 screws (C) and remove the brush unit as shown in figure 3-2-4. (Caution : brushes are easy to bent)
4. Unscrew the 2 screws (D) and unsolder the 2 lead wires of slip ring and then remove the slip ring as shown in figure 3-2-5.
5. Unscrew the 2 screws (E) and unsolder 8 lead wires of upper drum unit as shown in figure 3-2-6.
6. Remove the upper drum unit.

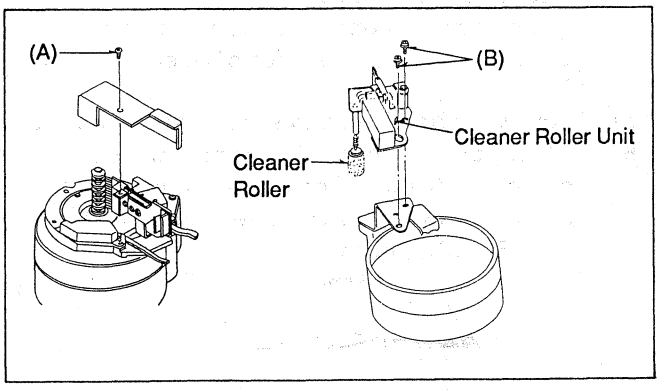

Fig. 3-2-3 Brush Cover and Cleaner Roller

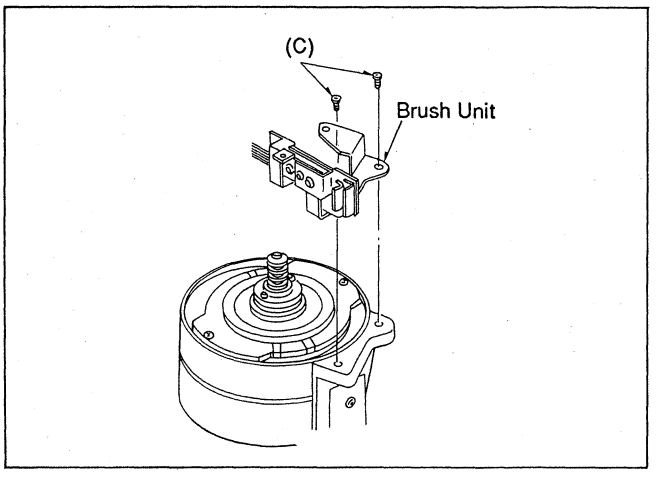

Fig. 3-2-4 Brush Unit

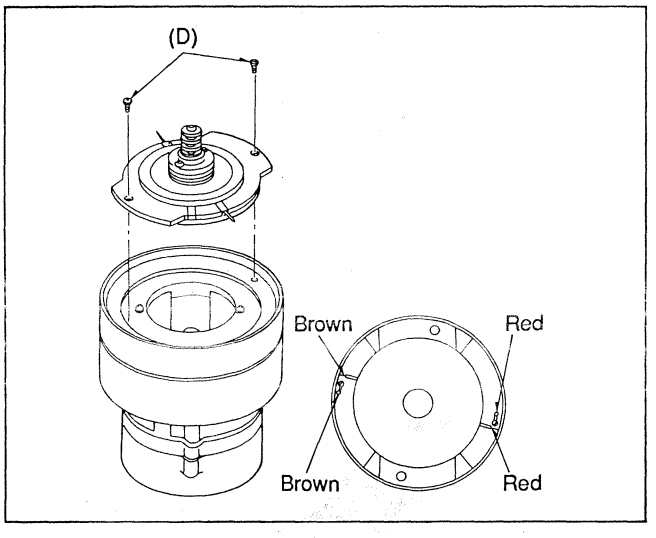

Fig. 3-2-5 Slip Ring Removal

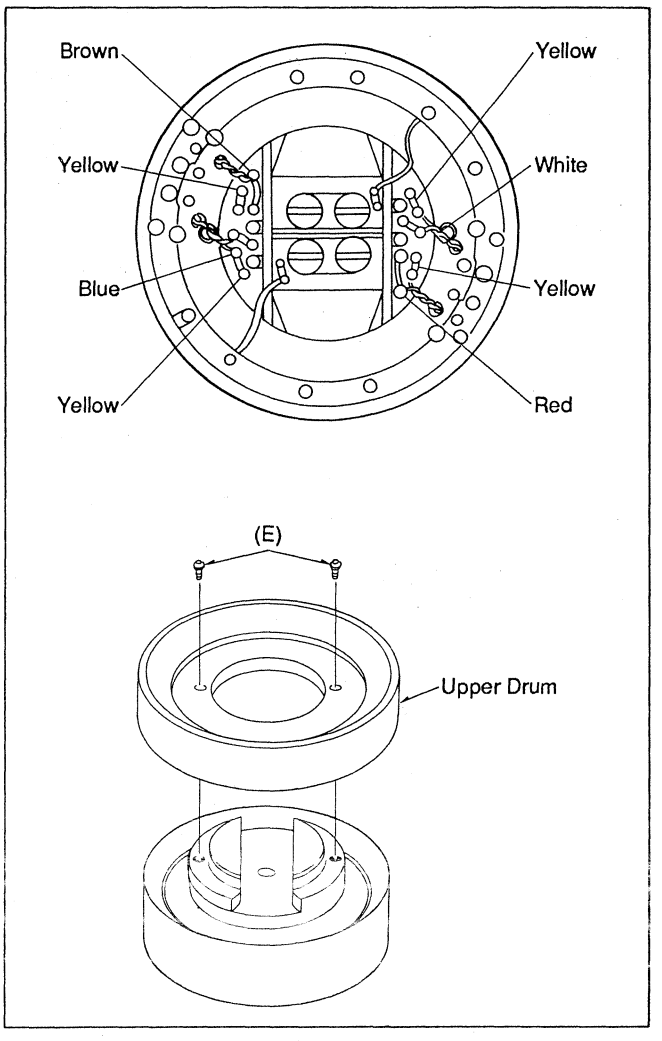

Fig. 3-2-6 Upper Drum Removal

<For AU-665>

1. Unscrew screw (A) and remove the brush cover as shown in figure 3-2-7.
2. Unscrew the 2 screws (B) and remove the cleaner roller unit as shown in figure 3-2-7.
3. Unscrew the 2 screws (C) and remove the brush unit as shown in figure 3-2-8. (Caution : brushes are easily bent)
4. Unscrew the 2 screws (D) and remove the rotary transformer arm unit as shown in figure 3-2-9.
5. Unscrew the 2 screws (E) and unsolder 14 lead wires of slip ring and then remove the slip ring as shown in figure 3-2-10.
6. Unscrew the 2 screws (F) and unsolder 8 lead wires of upper drum unit as shown in figure 3-2-11.
7. Remove the upper drum unit.

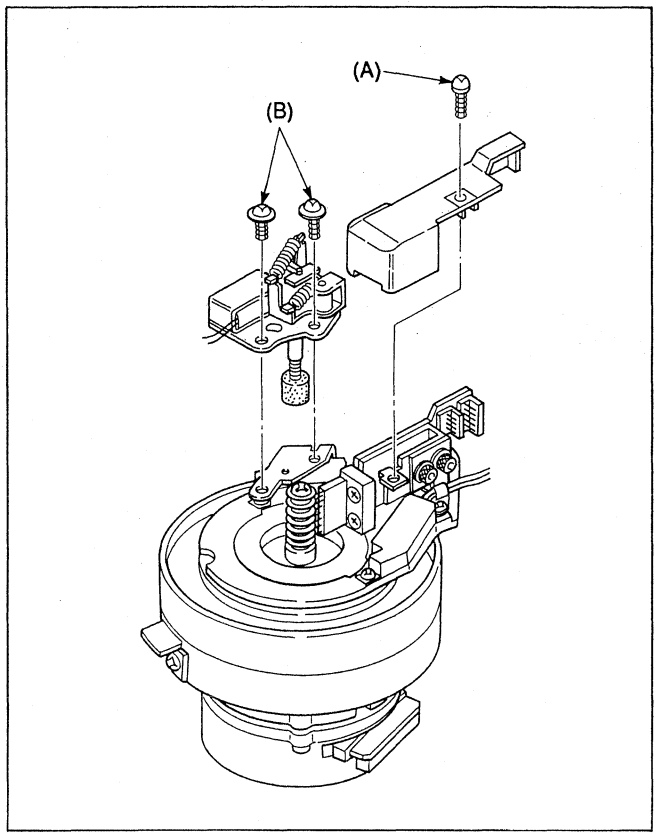

Fig. 3-2-7 Brush Cover and Cleaner Roller

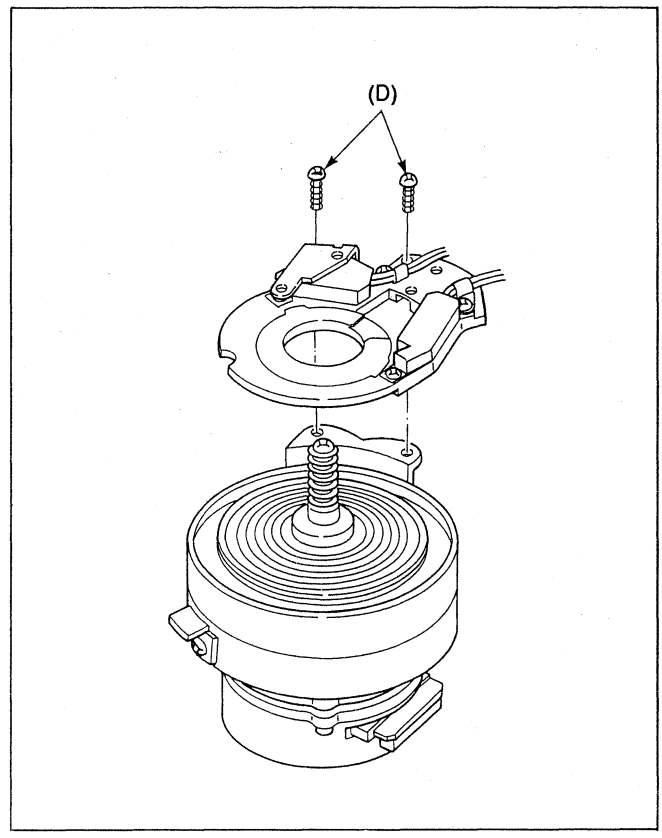

Fig. 3-2-9 Rotary Transformer

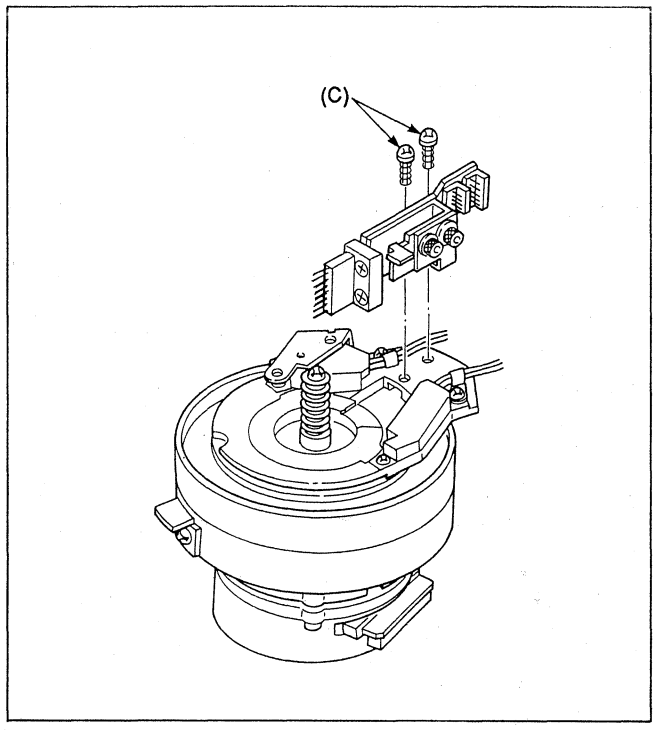

Fig. 3-2-8 Brush Unit

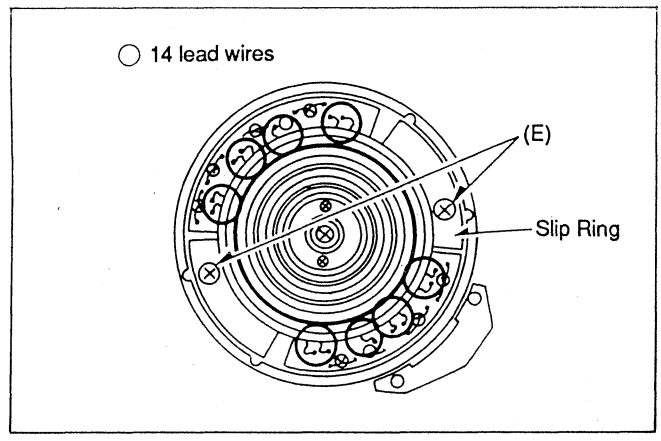

Fig. 3-2-10 Slip Ring

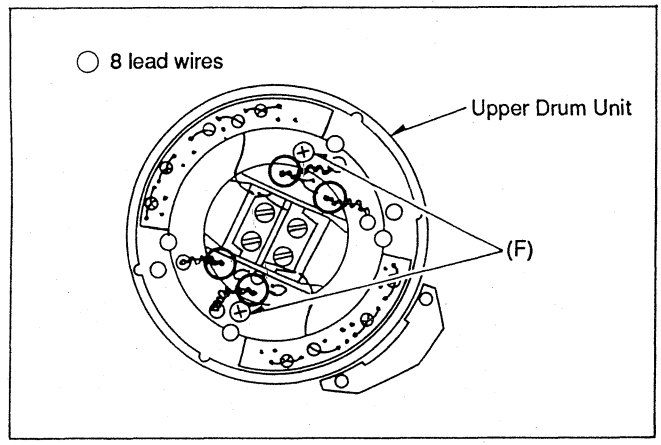

Fig. 3-2-11 Lead Wires of Upper Drum

3-2-2. Installation

1. Before install the new upper drum, clean these areas using head cleaning stick (VFK27) or soft cloth as shown in figure 3-2-12.

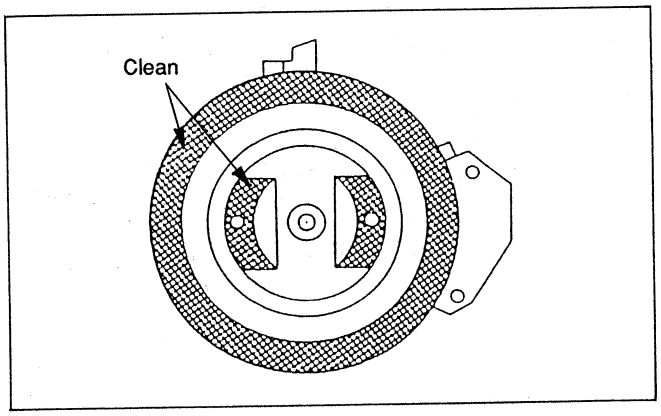

Fig. 3-2-12 Cleaning Part

2. Install the new upper drum so that the wire colors match, and loosely tighten the 2 screws for upper drum unit.
3. Install the head adjustment plate in place of the rotary transformer with attached 2 screws.
4. Mount the dial gauge with screw (A) (figure 3-2-13) so that the pick up of the dial gauge touches the upper part of the rotating drum.
5. Adjust the screw (B) of the head adjusting plate so that the pick up touches the drum and increases 20 to 80um in indication.

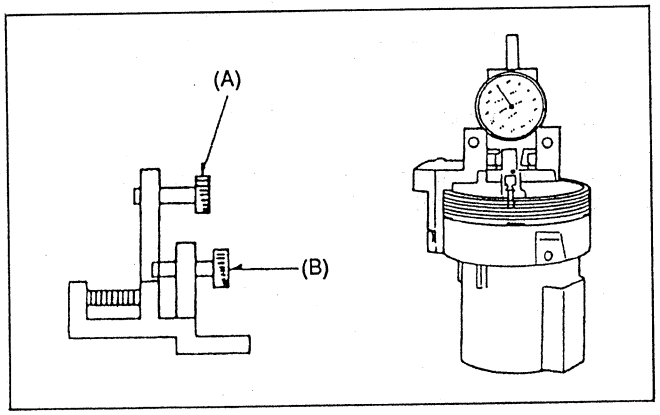

Fig. 3-2-13 Dial Gauge

6. Rotate the outer ring of the dial gauge to set the meter indication to zero. Rotate the upper drum slowly by hand. If the upper drum is not concentric with its axis of rotation, the meter will swing back and forth, indicating the amount of error. The maximum allowable tolerance is within +/-1.5um.
7. If it is out of specification, adjust the position of the upper drum by tapping lightly with the plastic handle of a screwdriver on the side of the drum opposite from the point of measurement. When the eccentricity is within +/-1.5um, gently tighten the 2 screws for upper drum. Check eccentricity to make sure it is within specification. If it is out, repeat this procedure.

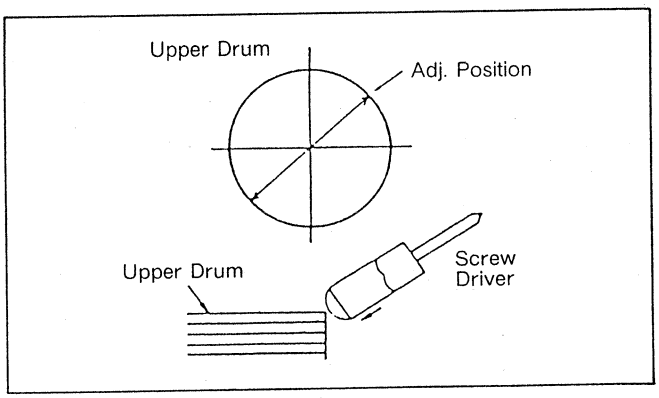

Fig. 3-2-14 Upper Drum Adj.

8. Tighten the 2 screws of upper drum securely and check eccentricity again. If it is within +/-1.5um, remove the head adjustment plate.
9. Solder the lead wires of the upper drum to their matching colors.
10. Install the FE brush unit and cleaner roller. (for AU-65/62)
11. Install the slip ring unit and tighten the 2 screws. (for AU-63/665)
12. Solder the lead wires of the slip ring. (for AU-63/665)

Procedures 13, 14 are for AU-665 only.

13. Set the RT gap spacer on the lower part of the rotary transformer and install the upper RT unit, with the 2 screws. (Fig. 3-2-15)
14. To assure proper spacing of the two halves of the rotary transformer, the 3 hex screws (A) are adjusted (clockwise) so that the upper half of the rotary transformer touches the spacer at all three points. Hex screws (B) should be loose during this procedure.
    Loosen each screw (A) counterclockwise slightly until the spacer can be pulled free, then keep this gap and tighten the 3 hex screws (B) evenly (Do not tighten up in sequence). Check to see that the upper drum turns freely (no sound) even if using the RT gap spacer. (Fig. 3-2-16)

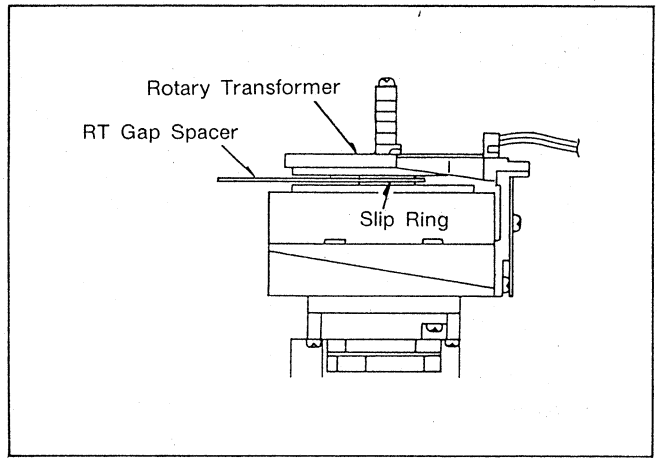

Fig. 3-2-15 RT Gap Spacer

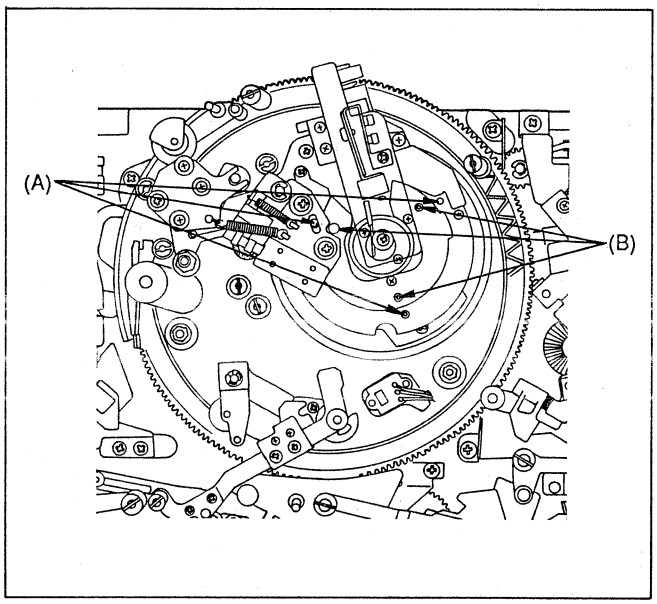

Fig. 3-2-16 Rotary Transformer

Following procedures (15 to 17) are AU-63/665 only.

15. Install the brush unit and tighten the 2 screws for brush unit.
16. Normally brush tension need not be adjusted unless new brushes are installed. However, to check the brush adjustment, first of all, confirm that the brush stopper portion (bending portion of the metal plate) is just touches the RT arm cutting portion as shown in figure 3-2-17. (AU-665 only) And loosen the screw (I) until they are straight and still touching the slip ring assembly, then tighten the screw (I) 1 and 1/2 turns clockwise.
17. Install the brush cover and cleaner roller unit and then tighten the screws.

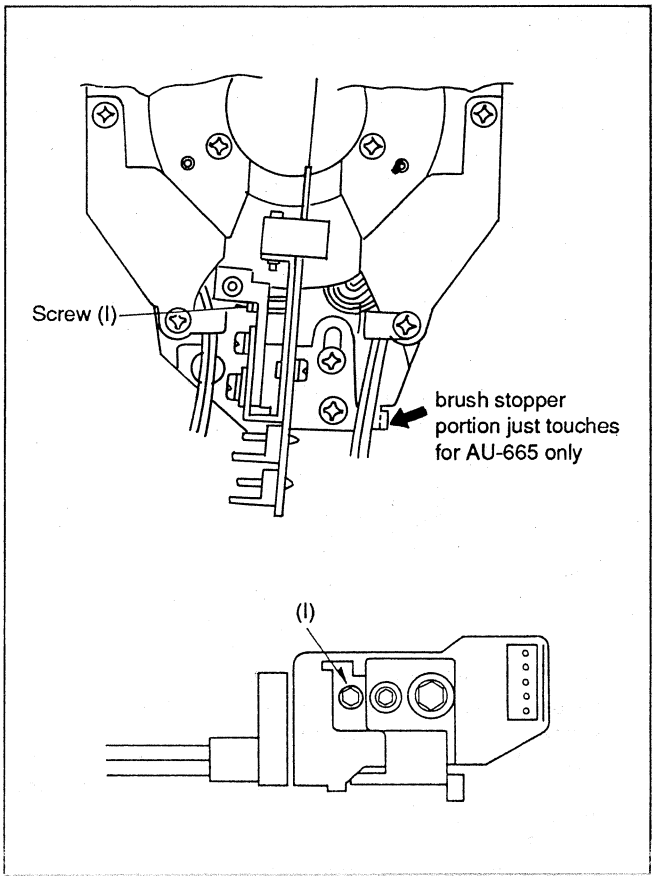

Fig. 3-2-17 Brush Unit Installation

Note:
When the upper drum is replaced, run the cleaning cassette (AU-MPSCL) for 60 second to polish the head surface.

3-2-3. ADJUSTMENT

After the replacement, perform the following electrical adjustments.

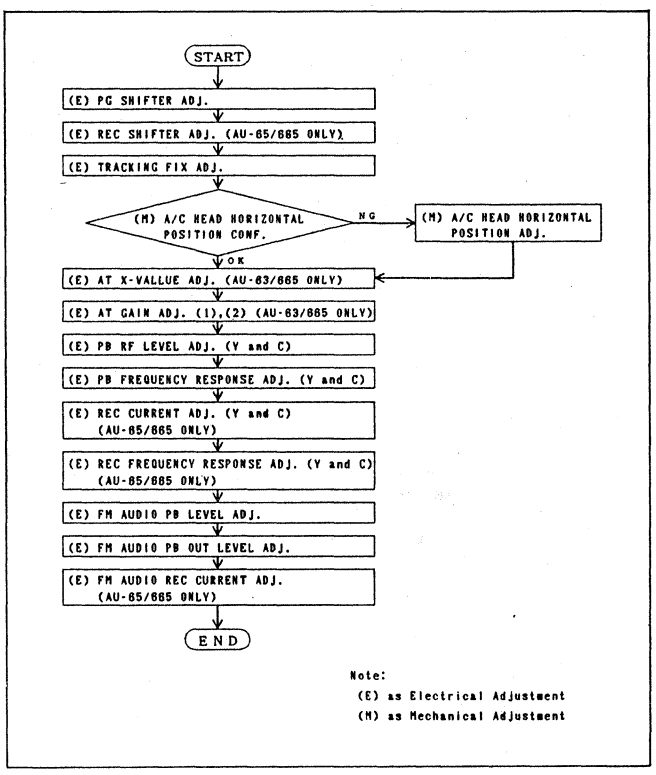

Note:

After adjustment of Upper Drum, confirm that the RF envelope is flat using the alignment tape linearity portion.

3-3. DRUM UNIT REPLACEMENT AND ADJUSTMENT

3-3-1. Removal

1. Disconnect the connector (A).(for AU-63 only) Disconnect the 4 connectors (A) (B) (C) and (D) as shown in figure 3-3-1. (for AU-665 only)

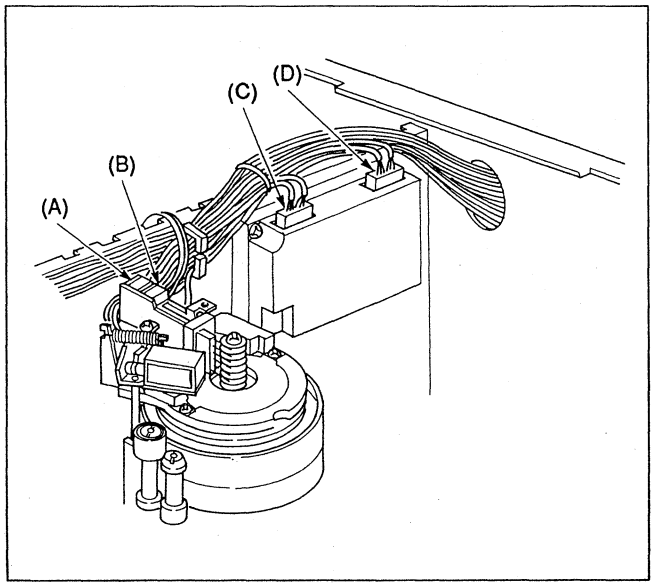

Fig. 3-3-1 Drum's Connectors

2. Unscrew the 2 screws to removing the cleaner unit as shown in figure 3-3-2.
3. Remove the bottom plate.
4. Remove the SYSCON and TCG/TCR P.C.Board (option for AU-65/63/62) as shown in figure 3-3-3.
5. Disconnect the 5 connectors (E), (F), (G), (H), and (I) from the bottom side as shown in figure 3-3-4.
6. Remove the 3 screws to removing the Drum Unit from tape transport side as shown in figure 3-3-5.

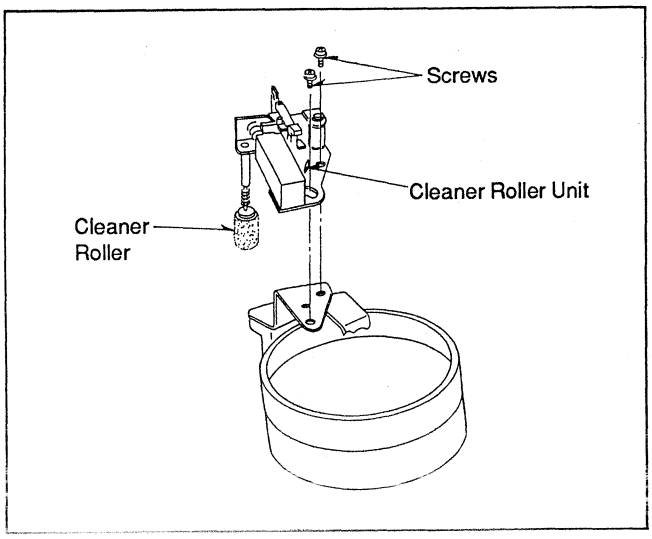

Fig. 3-3-2 Cleaner Roller Removing

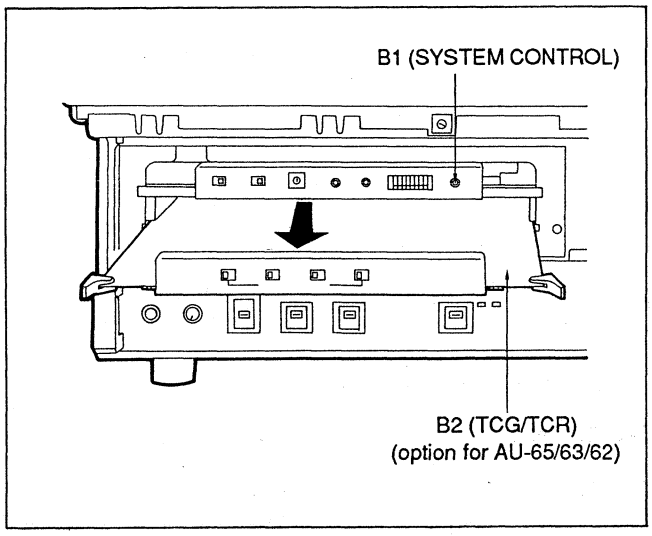

Fig. 3-3-3 B1 and B2 Unit Removal

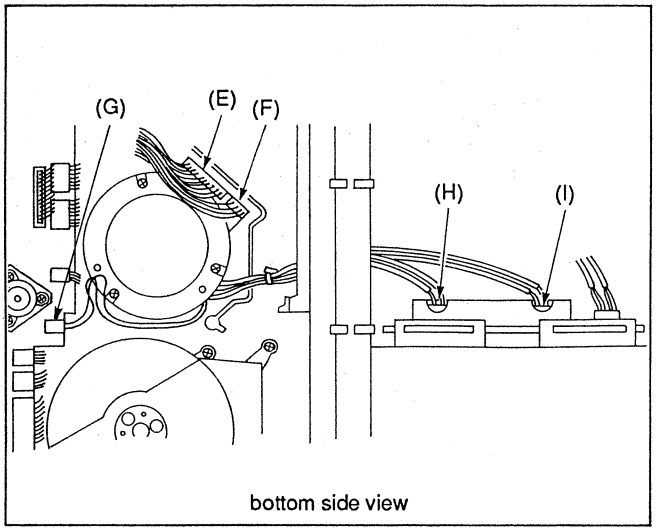

Fig. 3-3-4 Drum's Connector

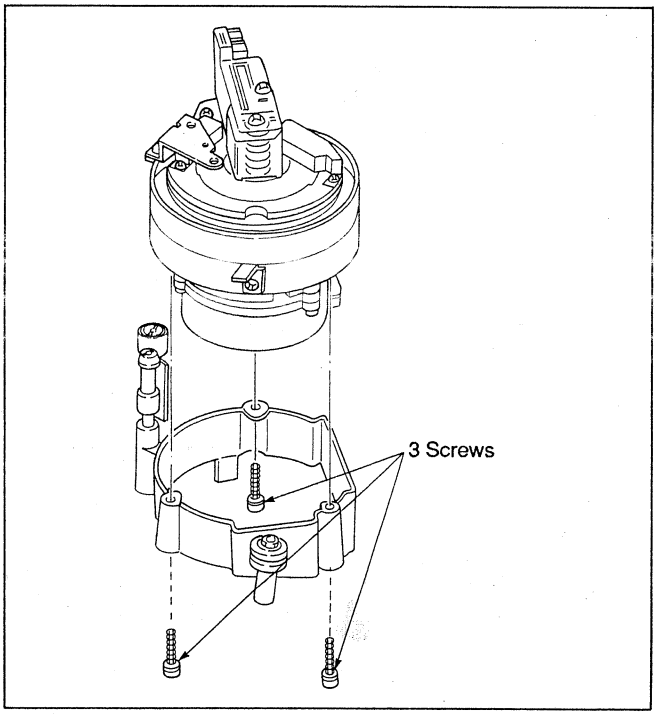

Fig. 3-3-5 Drum Unit Removal

3-3-2. Installation and Confirmation

1. Install new head drum assembly. (Don't touch tape contact surface of drum unit)
2. Tighten the 3 screws evenly. (recommended driver torque --- 8 kg/cm)
3. Reconnect the connectors that were disconnected during the removal.
4. Install the Head Cleaner Unit.
5. Push the solenoid and rotate the drum counterclockwise as shown in figure 3-3-6.
6. Confirm that the projection part (A) is positioned as center of a dent part (B) as shown in figure 3-3-6.

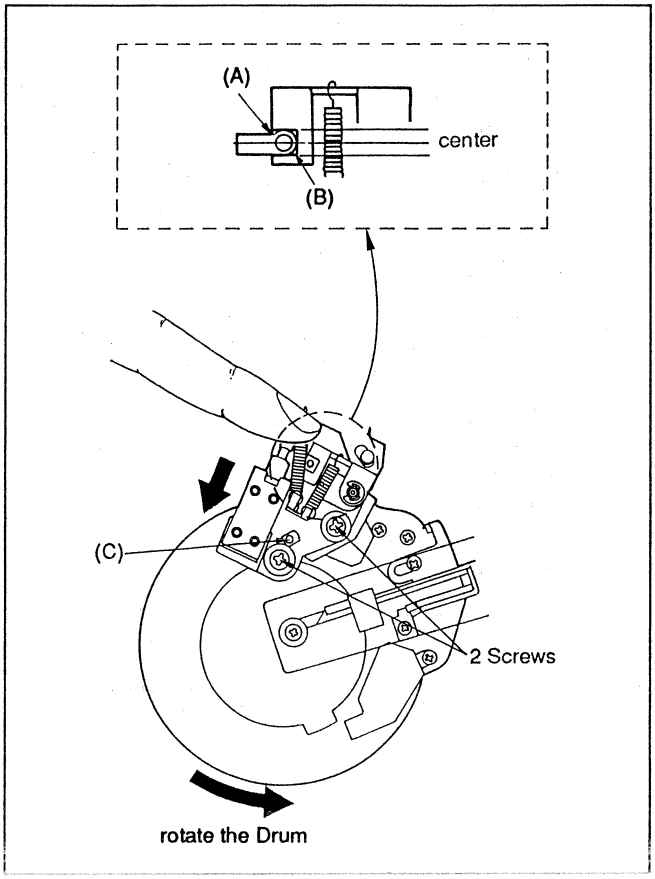

Fig. 3-3-6 Solenoid Position

7. If it is not, loosen the 2 screws and insert the eccentric screw driver into hole (C) and adjust the Cleaner position. (Fig. 3-3-6)
8. Clean the head drum using alcohol. After cleaning using alcohol, wipe the head using dried cloth.
9. Make a recording for a few minutes and playback the portion that was just recorded about 2 second.
10. Press the STOP button and confirm that the top of envelope is stable. (less than 0.2 msec) as shown in figure 3-3-7.
11. If it is not, confirm that the wires from the drum is not pinched between drum and chassis or confirm that the 3 screws are exactly tightened.

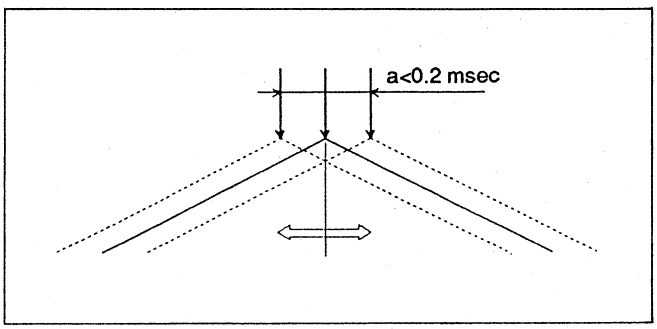

Fig. 3-3-7 Envelope Out

3-3-3. Adjustment

1. After the replacement, perform the following confirmation and adjustment.

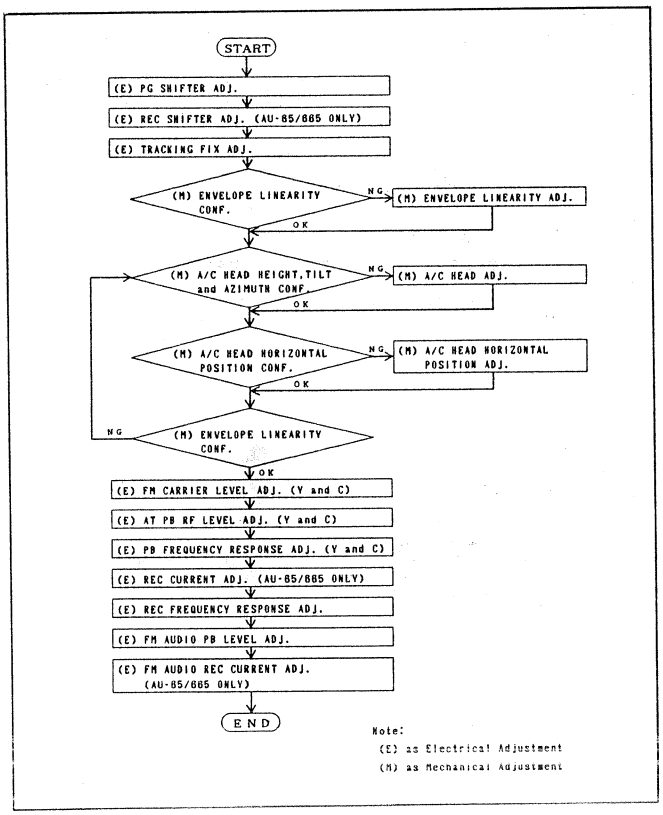

3-4. CLEANER ROLLER REPLACEMENT AND ADJUSTMENT

***Tool Required**
Eccentric Screwdriver

Removal

1. Remove the 2 screws (A) and remove the cleaner unit.
2. Remove the cleaner roller.

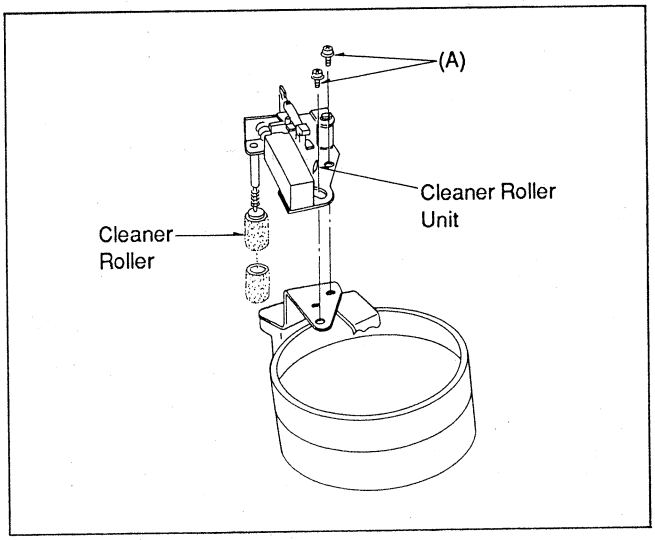

Fig. 3-4-1 Cleaner Unit

Installation

1. Follow the removal steps in reverse order.

Cleaner Unit Position Adjustment

1. Push the solenoid and rotate the drum.
2. Confirm that the projection part (A) is positioned as center of a dent part (B) as shown in figure 3-4-2.
3. If it is not, loosen the 2 screws and insert the eccentric screw driver into hole (C) and adjust the cleaner position.

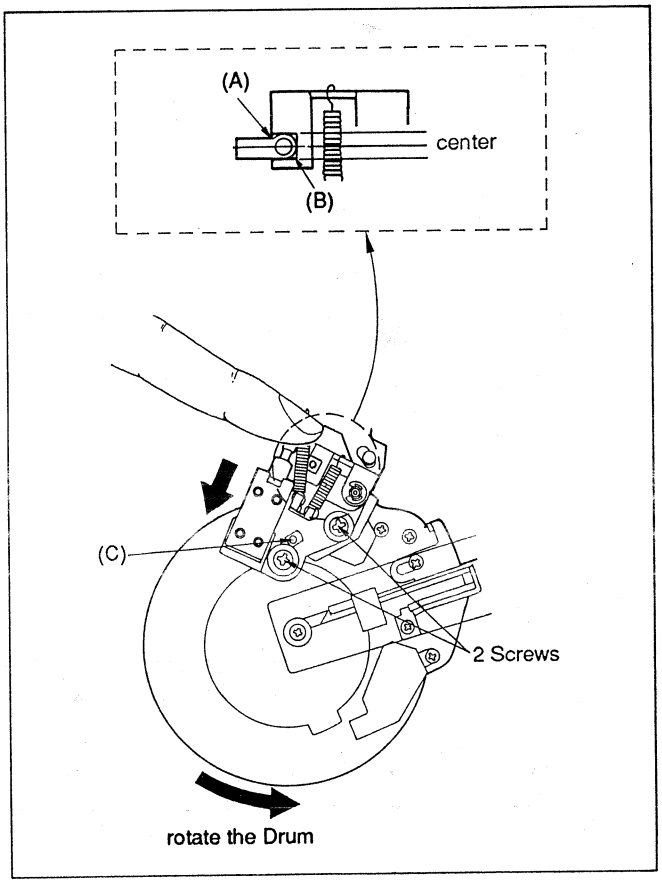

Fig. 3-4-2 Cleaner Unit Position

3-5. PINCH ROLLER ARM UNIT REPLACEMENT

Removal

1. Push down the ring drive gear (A) by using a screw driver and move the loading ring counterclockwise so that the Pinch Roller reaches the position as shown in figure 3-5-1.
2. Remove the E-ring (C).
3. Remove the Pinch Roller unit (B).
4. Remove spring. (Fig. 3-5-2)

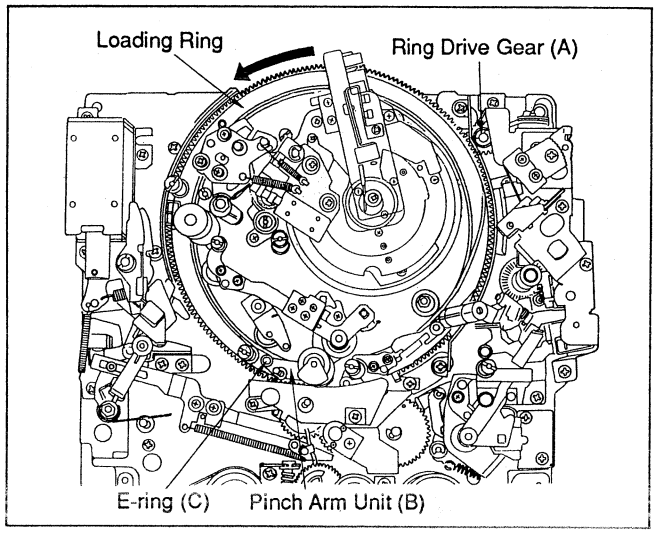

Fig. 3-5-1 Pinch Roller Arm Unit

Installation

1. Install a new Pinch roller unit and attach the spring, as originally installed, as shown in figure 3-5-2.
2. Turn the power on and insert a blank cassette. Playback the tape and observe the tape path. Be sure that no tape curling occurs on any post.

Note: When replacing the pinch roller, be sure not to lose the washer.

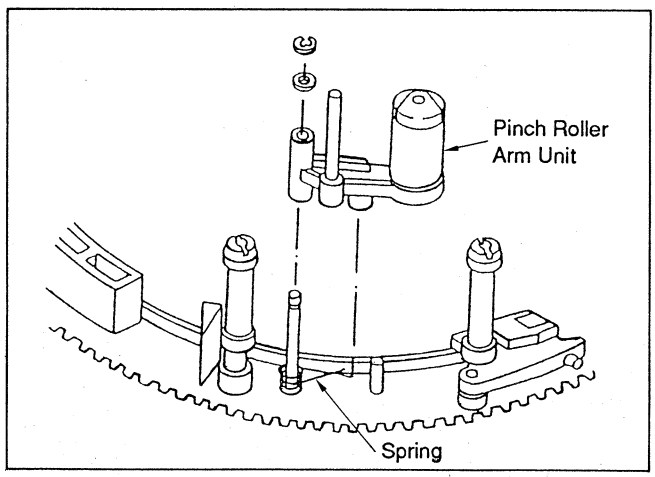

Fig. 3-5-2 Spring Position

3-6. LOADING MOTOR BELT REPLACEMENT

Removal

1. Remove the loading belt to direction (A) as shown in figure 3-6-1.

Installation

1. Put new loading belt onto the loading motor first as shown in figure 3-6-2.
2. Then replace onto the wormgear pulley as shown in figure 3-6-2.
3. Clean the belt after replacement.

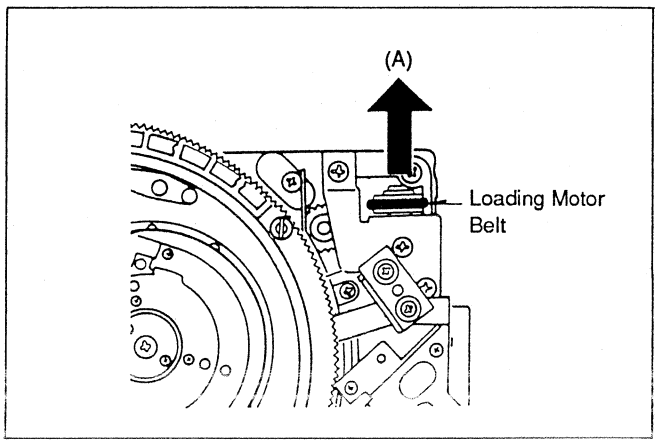

Fig. 3-6-1 Loading Motor Belt (1)

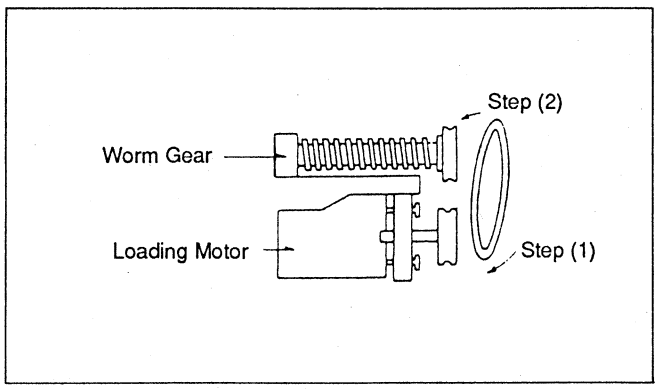

Fig. 3-6-2 Loading Motor Belt (2)

3-7. FRONT LOADING MOTOR BELT REPLACEMENT

Removal

1. Remove the belt from the wormgear shaft side pulley.
2. Remove the belt from the motor side.

Installation

1. Install the new belt in reverse order.
2. Clean the belt after replacement.

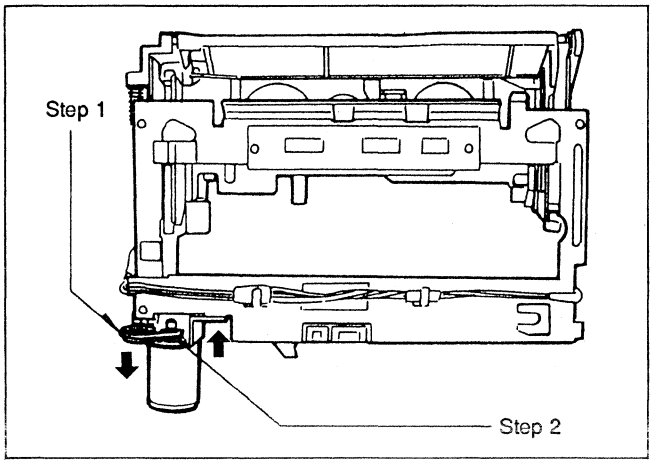

Fig. 3-7-1 Front Loading Motor Belt

3-8. TENSION UNIT REPLACEMENT AND ADJUSTMENT

***Tools Required**
Tentelometer (VFK0132)
Eccentric Screwdriver (VFK0357) (VFK0359)
Digital Voltmeter

3-8-1. SUPPLY TENSION SPRING PLATE AND STOPPER PIN BASE UNIT REPLACEMENT

Removal

1. Loosen the hex (A) and remove the Supply Tension Arm Unit as shown in figure 3-8-1.

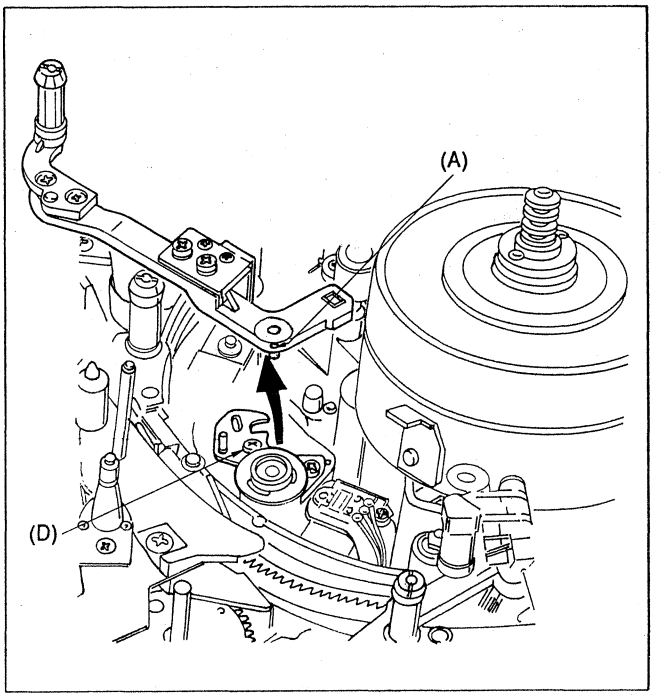

Fig. 3-8-1 Supply Tension Arm Unit

2. Unscrew the 2 screws (B) and remove the Spring Plate Unit as shown in figure 3-8-2.
3. Unscrew the 2 screws (C) and remove the Spring Plate as shown in figure 3-8-2.

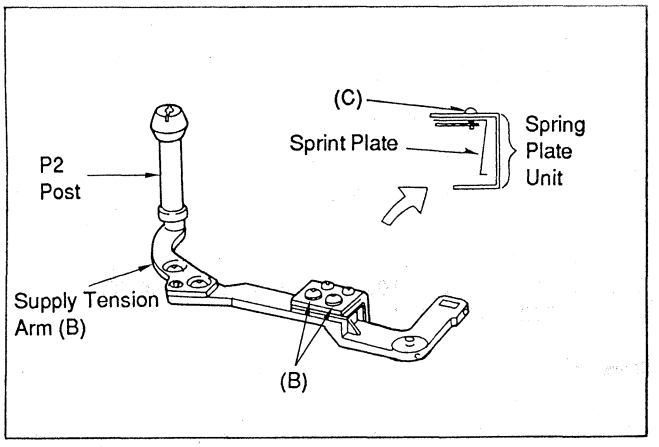

Fig. 3-8-2 Spring Plate Removal

4. Unscrew the screw (D) and remove the Stopper Pin Base Unit as shown in figure 3-8-1.

Installation

1. Install the new Spring Plate and Stopper Pin Base Unit in reverse order.

Note :
When installing the Supply Tension Arm Unit, the Stopper Pin is positioned into a rectangle hole of Spring Plate Unit as shown in figure 3-8-3 and tension pick-up post may have to be pushed from the bottom side. Because of the Tension pick-up post will slip down when installing as shown in figure 3-8-4.

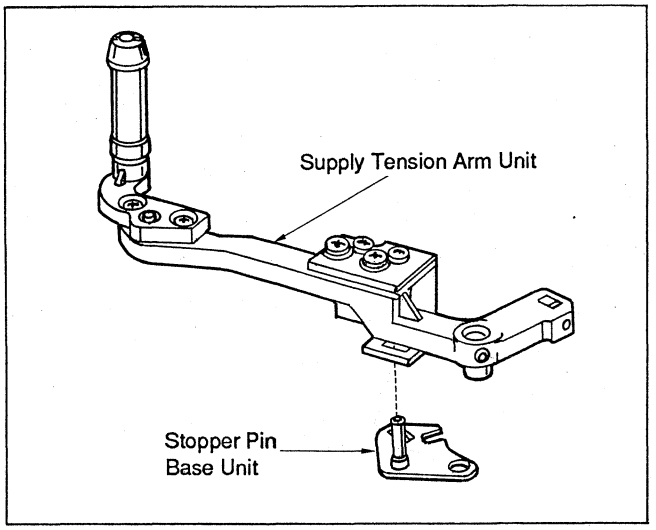

Fig. 3-8-3 S-Arm Installation

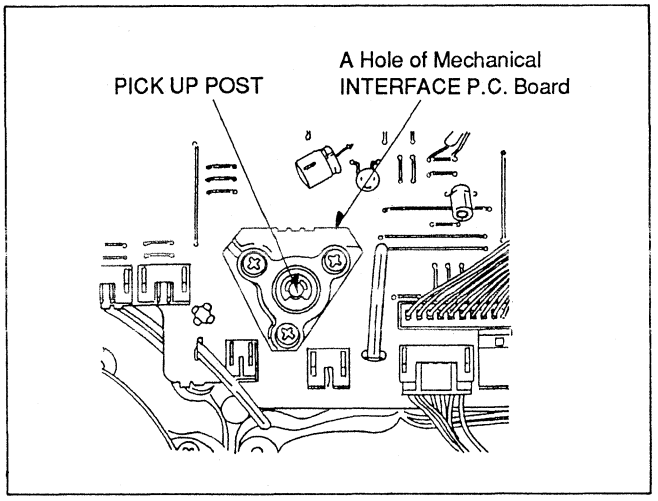

Fig. 3-8-4 Pick-up Post

3-8-2. TAKE UP TENSION ARM UNIT AND STOPPER PIN BASE UNIT REPLACEMENT

Removal

1. Loosen the hex screw (A) and remove the Take Up Tension Arm Unit as shown in figure 3-8-5.
2. Remove the P11 Post from removed Take Up Tension Arm Unit. (Do not loosen the hex screw (C) of the P11 Post.)
3. Unscrew the screw (B) and remove the stopper Pin Base Unit as shown in figure 3-8-5.

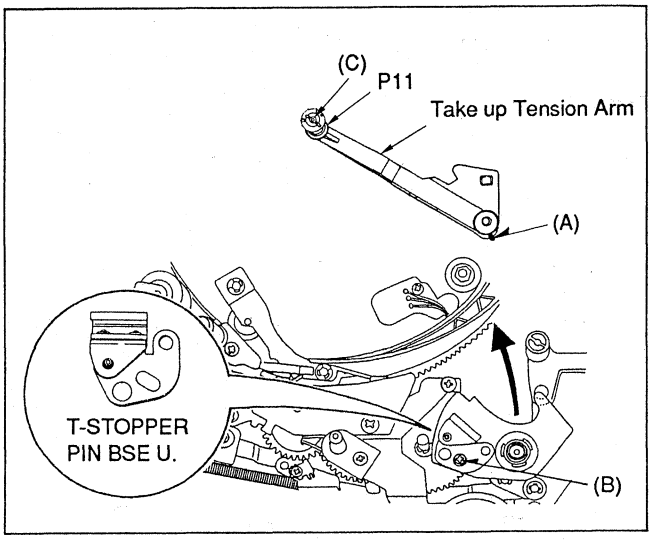

Fig. 3-8-5 Take Up Tension Arm Unit

Installation

1. Install the removed P11 Post to new Take Up Tension Arm Unit.
2. Install the new Take Up Tension Arm Unit and Stopper Pin Base Unit in reverse order.

Note :

When install the Take Up Tension Arm Unit, the Stopper Pin is positioned into rectangular hole (D) of Take Up Tension Arm Base as shown in figure 3-8-6 and tension pick up post have to be pushed from the bottom side. Because of the tension pick-up post will go down when installing as shown in figure 3-8-7.

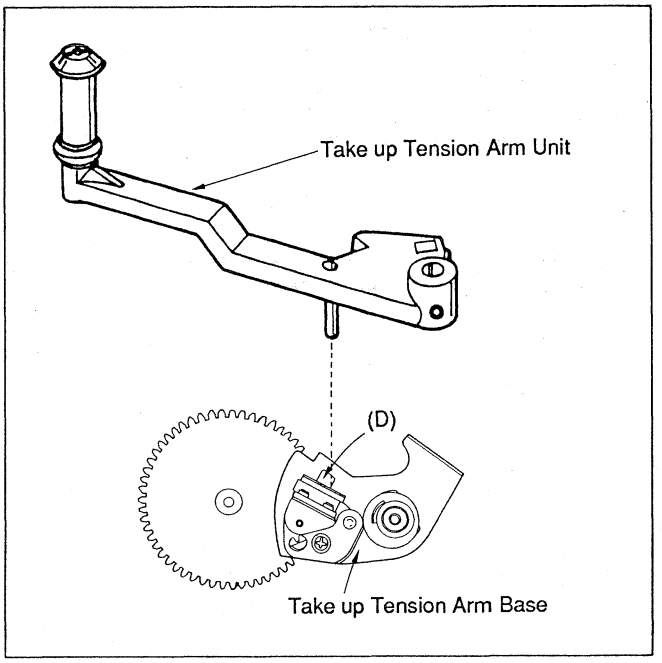

Fig. 3-8-6 T-Arm Installation

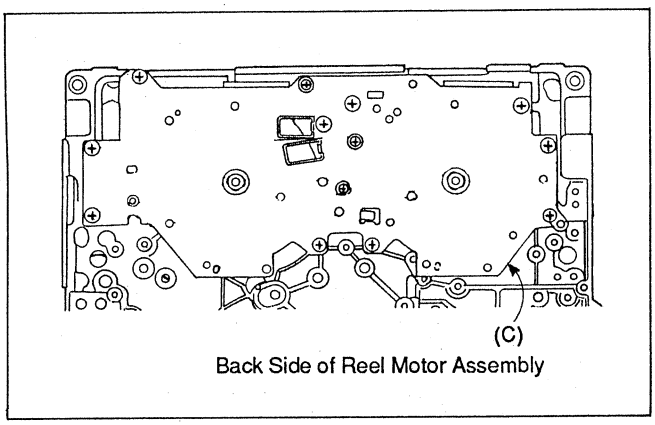

Fig. 3-8-7 Pick-up Post

3-8-3. MAGNET CLEARANCE ADJUSTMENT (Take Up side only)

***Tools Required :**
Dummy Plug (1) (VFK0361)
Hex Wrench
Thickness Gauge

1. Turn the power off.
2. Remove the front loading unit and connect the dummy plug (1) into P406 socket.
3. Turn the power ON.
4. Press the stop button without the tape.
5. observe the clearance (A) between magnet and sensor.
   This clearance should be between 0.5 +/- 0.1mm as shown in figure 3-8-8.
6. If not, loosen the hex screw (B) and adjust the position of the magnet using thickness gauge so that the clearance (A) is within specifications as shown in figure 3-8-8.
7. Tighten the hex screws.
8. Lock the magnet using loctite.

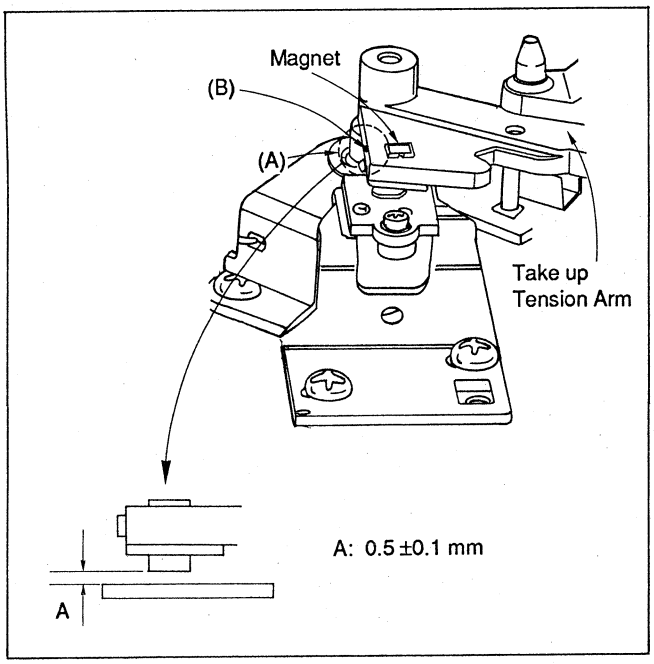

Fig. 3-8-8 Tension magnet

3-8-4. TENSION ADJUSTMENT

***Tools Required :**
Tentelometer (VFK0132)
Eccentric Screwdrivers (VFK0357)(VFK0359)
Digital Voltmeter
Dummy Plug 1 (VFK0361)

Note 1 :
Before performing tape tension confirmation Tension Meter should be calibrated as following procedure.

TENSION METER CALIBRATION PROCEDURE

1. Set a MII Metal tape to an ounce weight.
2. Pull up a tape by hand as shown in figure 3-8-9.
3. Adjust VR on the Tension Meter so that the tension meter reading is 1 ounce.

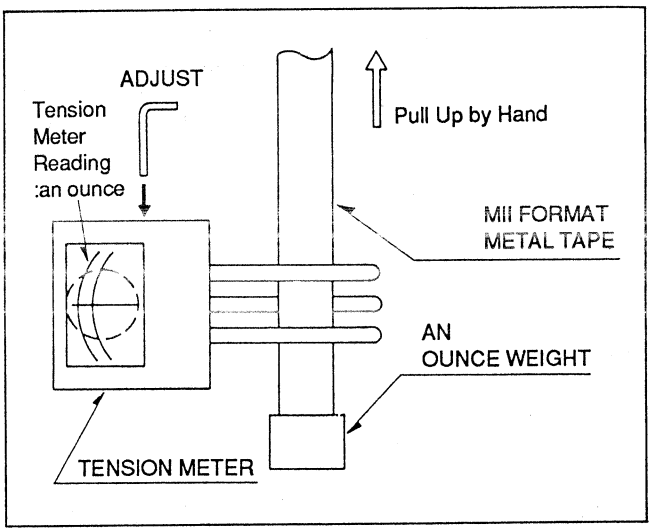

Fig. 3-8-9 Tension Meter Calibration

TENSION ADJUSTMENT (MECHANICAL)

1. Remove the front carriage unit and connect the dummy plug (1) into P406 socket.
2. Extend the SERVO(W5) board and turn power on.
3. Set the SYNC AUTO switch on the front sub panel to AUTO position.
4. Place the unit in the EJECT mode and connect a digital voltmeter to TP303. Adjust VR302 for 2.5 +/- 0.01 (V/DC). Connect the digital voltmeter to TP304, and adjust VR303 for 2.5 +/- 0.01 (V/DC).
5. Connect the digital voltmeter to TP312 and adjust VR308 for 35 +/- 1 (mV DC).
6. Set the mechanical neutral adjustment plate over the reel tables and fix the plate as shown in figure 3-8-10.

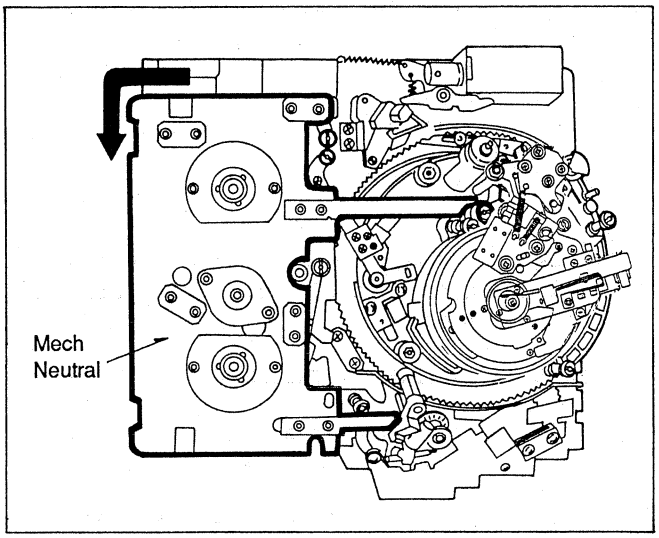

Fig. 3-8-10 Mech Neutral Plate

7. Connect the jumper wire between TP19 and TP20 to defeat the tape slack function.
8. Place the unit in the STOP mode. After loading is completed make sure that the P2 post touches the arm of the mechanical neutral adjustment plate as shown in figure 3-8-11.

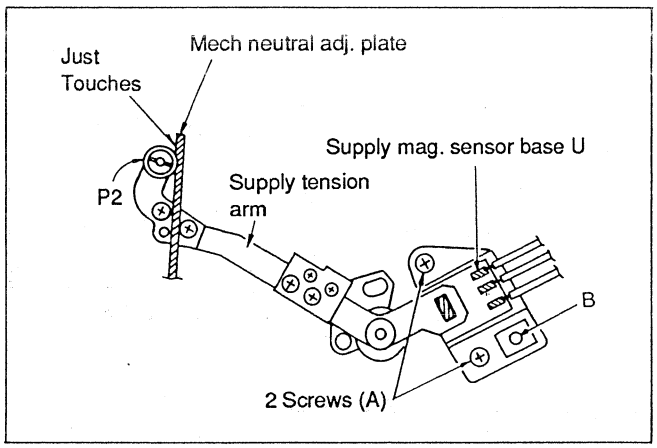

Fig. 3-8-11 Supply Tension

9. Measure the voltage at TP303 and TP304, and verify that it is 2.5 +/- 0.05VDC.
10. If it is not, loosen the 2 screws (A) and insert the eccentric screwdriver into hole (B). (figure 3-8-11, 3-8-12)

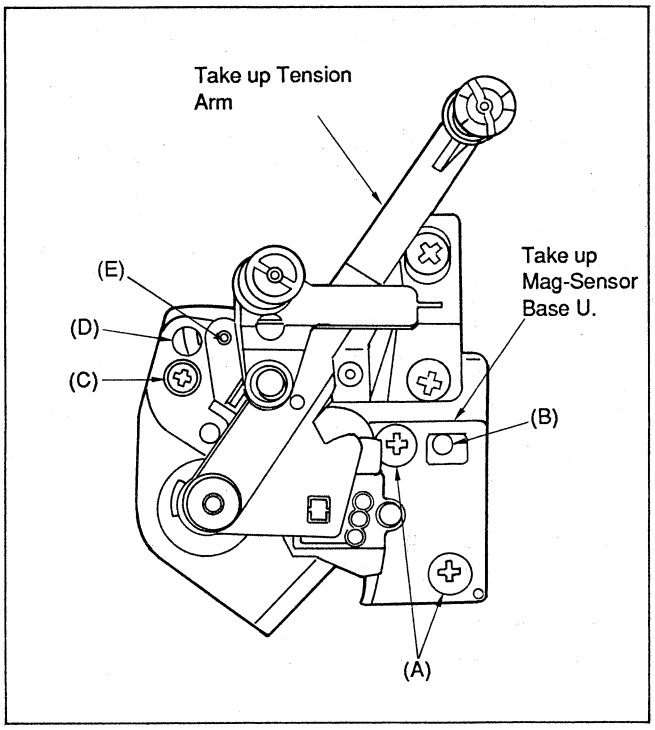

Fig. 3-8-12 Take Up Tension

11. Adjust the supply and take up magnet sensor base unit (figure 3-8-11, 3-8-12) so that the voltage at TP303 and TP304 are 2.5 +/- 0.05 VDC.

Note :
Do not use the magnetic driver, when adjust the magnet sensor base.

12. Tighten the screws (A) (make sure the voltage at TP303 and TP304 does not change) and remove the mechanical neutral adjustment plate.
13. Place the cassette over the reel tables (MP90 should be used) and place the weight on the cassette to hold it in place. (full roll of solder)
14. Place the unit in the PLAY mode from tape beginning and confirm that the tape tension between P1 and P2 is 23 +/- 2 grams as shown in figure 3-8-13. (Tape tension confirmation should be done after the tape movement has stabilized.)

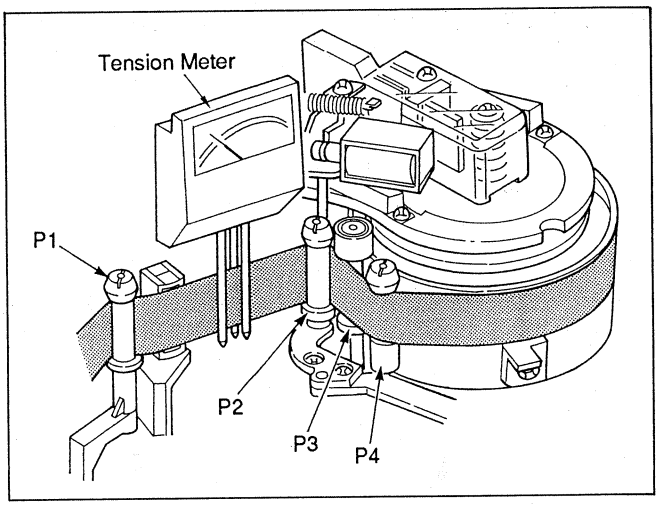

Fig. 3-8-13 Supply Tension

15. If it is not, loosen screw (A), and insert the eccentric screwdriver into hole (B) and adjust the tension as shown in figure 3-8-14.

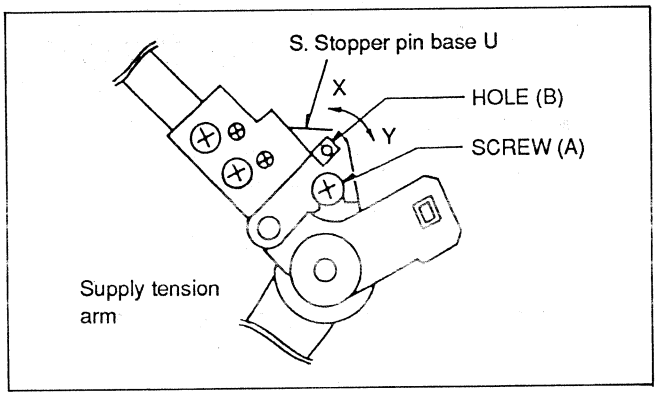

Fig. 3-8-14 Supply Tension Adj.

16. Tighten screw (A).
17. Confirm that the tape tension between P9 and P10 post is 23 +/- 2 grams as shown in figure 3-8-15.

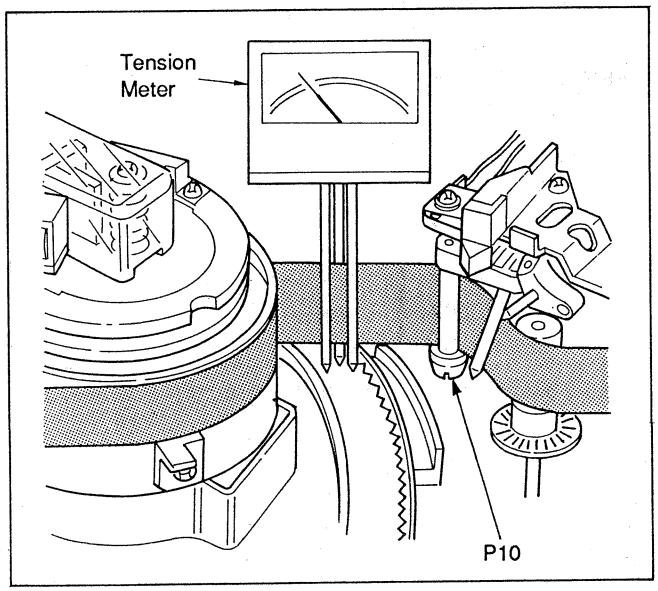

Fig. 3-8-15 Take Up Tension

18. If it is not, loosen the screw (C) and insert the eccentric screwdriver into hole (D) as shown in figure 3-8-12.
19. Roughly adjust the take up tension to 20 grams between P9 and P10.
20. Tighten the screw (D).
21. Slightly adjust the hex screw (E) to 23 +/- 2 grams between P9 and P10.
22. Place the unit in the SHTL or VAR X-1 mode around tape beginning portion and adjust VR309 so that the supply tension between P4 and drum entrance side is 20 +/- 1 grams as shown in figure 3-8-16.
23. Place the unit in the SHTL or VAR X-1 mode around tape beginning portion and adjust VR305 so that the take up side tension is 30 - 35 grams between P9 and P10 post as shown in figure 3-8-17.

Note :
When the tension is adjusted in the SHTL or VAR X-1 (or REWIND) mode, the tension meter is turned around as shown in figure 3-8-16, 3-8-17.

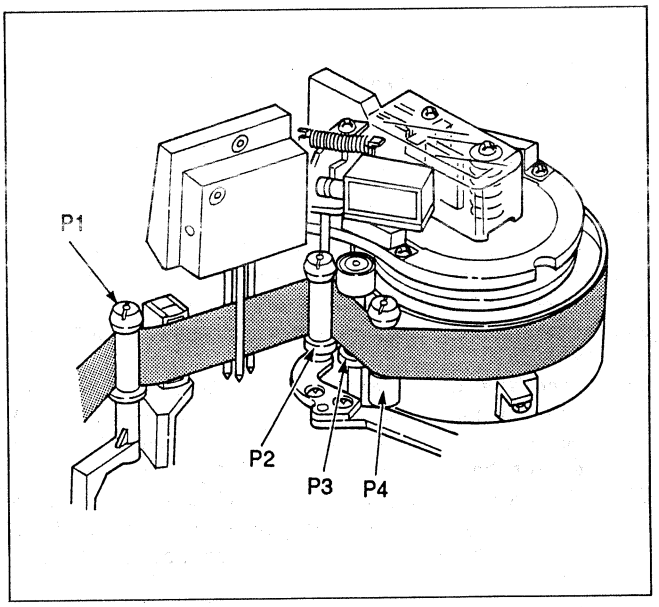

Fig. 3-8-16 Supply Tension

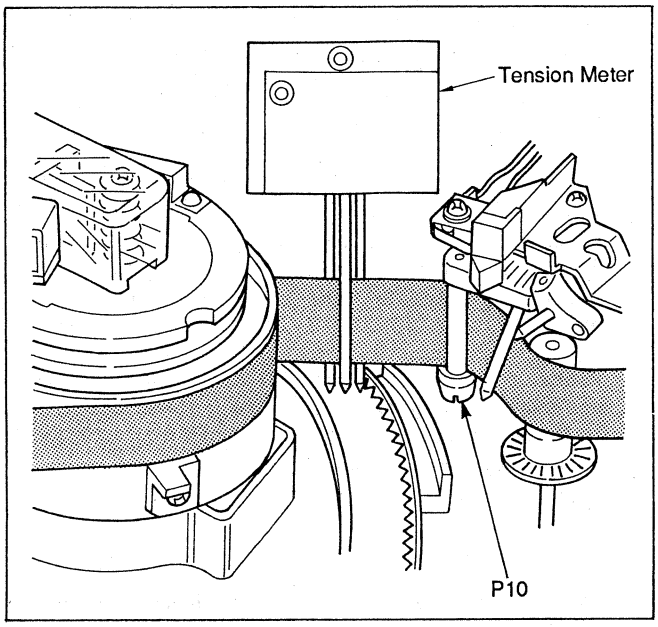

Fig. 3-8-17 Take Up Tension

23. Verify the voltage at TP302 and TP310 using digital voltmeter.
24. Place the unit in the PLAY mode and adjust VR301 so that the voltage (TP302)-(TP310) is -200 +/- 5 mVDC.
25. Connect the jumper wire between TP309 and TP311 and place the unit in the PLAY mode.
26. Adjust VR307 so that the take up tension between P9 and P10 is 8 - 10 grams.
27. Remove the jumper wire between TP309 and TP311.
28. Place the unit in the FAST FORWARD mode from tape beginning portion (MPL90 should be used) and adjust VR304 so that the supply side tension between P1 and P2 is 15 - 20 grams.
29. Place the unit in the REWIND mode from tape ending (MPL90 should be used) and adjust VR306 so that the supply side tension between P1 and P2 is 40 - 50 grams.
30. Remove the jumper wire between TP19 and TP20.
31. Place the unit in the PLAY mode without tape and confirm that the AUTO OFF mode is functioned.

3-9. REEL STAND UNIT REPLACEMENT

Replacement

1. Remove the B1 SYSTEM CONTROL and B2 TCG/TCR (option for AU-65/63/62) P.C.Board from front-sub panel as shown below.

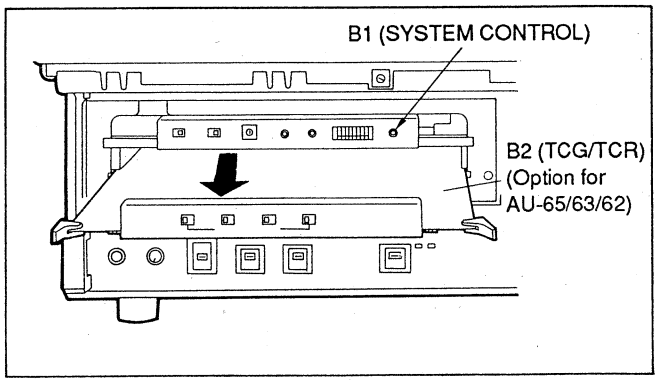

Fig. 3-9-1. B1 and B2 unit Removal

2. Remove the bottom panel.
3. Remove the 3 screws (A) on MECH. INTERFACE CIRCUIT P.C.Board and move the P.C.Board as shown in figure 3-9-2.
4. Disconnect the 7 connectors (P61020, P61017, P61002, P61025, CN121, CN110, CN111) on the MECH. INTERFACE CIRCUIT P.C.Board then move the P.C.Board as shown in figure 3-9-2.

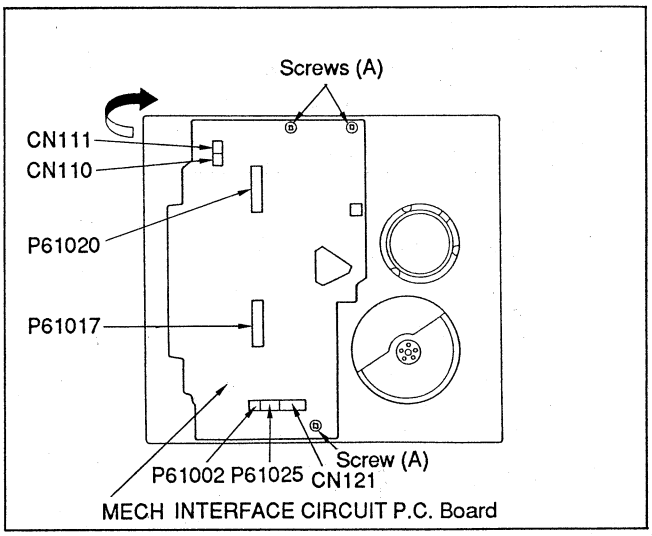

Fig. 3-9-2 MECH INTERFACE CIRCUIT P.C.Board

5. Remove the 9 screws (B) and remove Reel base unit.

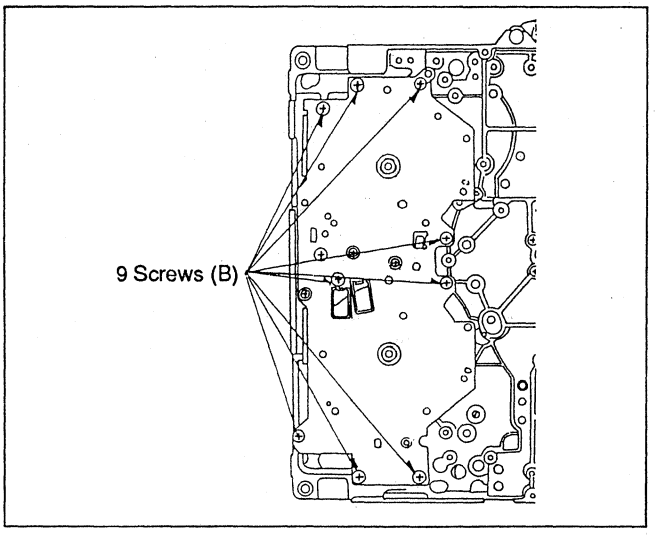

Fig. 3-9-3 Reel Base Unit Removal

6. Pull and remove the Reel stand unit.

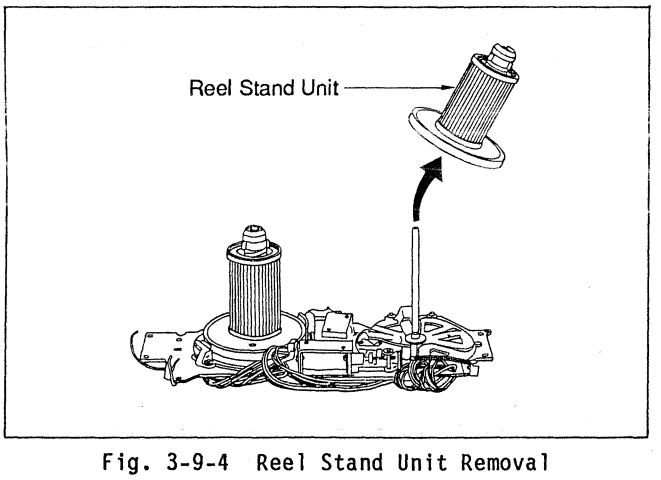

Fig. 3-9-4 Reel Stand Unit Removal

Installation

1. Reverse the previous steps.

3-10. A/C HEAD REPLACEMENT AND ADJUSTMENT

3-10-1. Replacement

***Tools required:**
Nut Driver (7m/m) (VFK0676)
Hex Wrench (VFK0326)

Removal

1. Remove the nut (A), loosen the hex-screw (B), hang off the height adjustment spring and then remove A/C Head assembly as shown in figure 3-10-1.

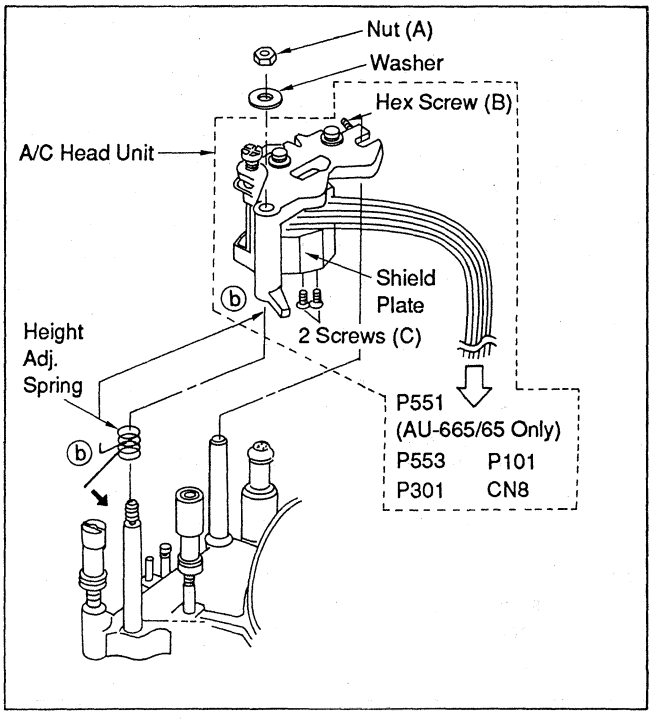

Fig. 3-10-1 A/C Head Removal

2. Remove the shield plate by removing 2 screws (C) as shown in figure 3-10-1 and disconnect the connectors which is connected to Audio P.C.Board (W6) as shown in figure 3-10-2.
3. Unsolder green cable only as shown in figure 3-10-3.

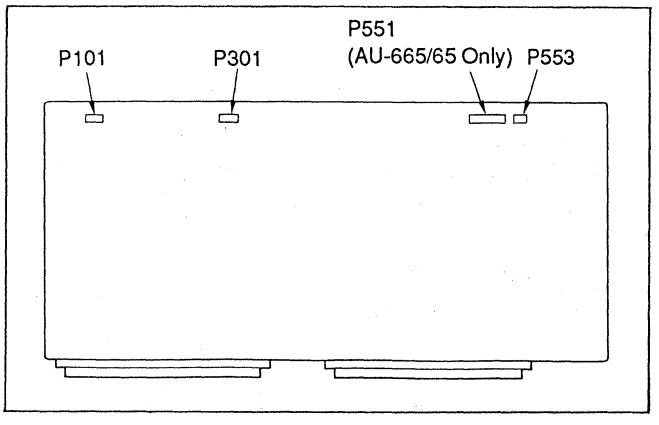

Fig. 3-10-2 Audio P.C.Board (W6)

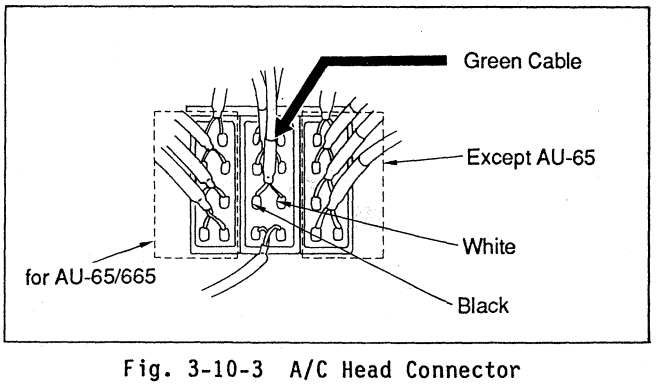

Fig. 3-10-3 A/C Head Connector

3-10-2. Installation

1. Confirm that the head and head mounting plate is set to be approximately 1 m/m with the plate parallel as shown in figure 3-10-4. If it is not, adjust the each screws to these plate parallel.
2. Solder the green cable to new A/C Head. (Supplied service parts is connected a green cable. Therefore, it is necessary to remove green cable before installing)
3. Reinstall the shield plate onto the A/C head assembly
4. Connect the removed connectors to W6 P.C.Board.
5. Install the new A/C head assembly.
6. Hang on the height adjustment spring and, tighten the nut (A) as shown in figure 3-10-5.
7. Clean the surface of the A/C head.

Note :
Hex screw (B) is kept loose until finish the A/C Head height adjustment.

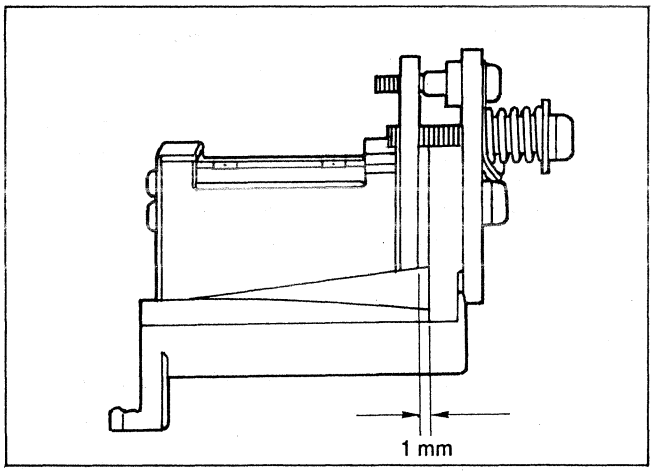

Fig. 3-10-4 A/C Head Assembly

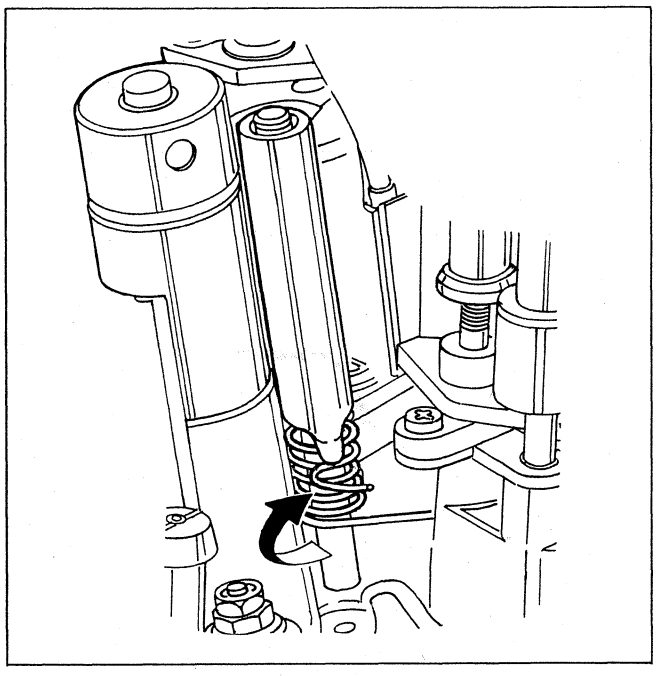

Fig. 3-10-5 Adjustment Spring

3-10-3. Mechanical Adjustment

***Tools Required :**
Alignment Tape
Nut Driver (7m/m) (VFK0676)
Hex Wrench (VFK0326)

Purpose of each screws

A : Tilt Adjustment
B : Fix for A/C Head Height
C : Height Adjustment
D : Coarse Azimuth Adjustment
E : Spring Tension and Fine Azimuth Adjustment
F,G : Fix for A/C Head Horizontal Position
H : Horizontal Position Adjustment Hole

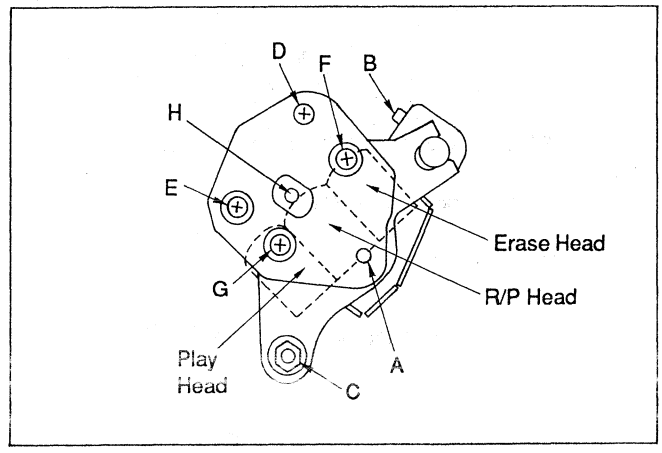

Fig. 3-10-6 A/C Head

Following figure shows A/C Head constructions for each models.

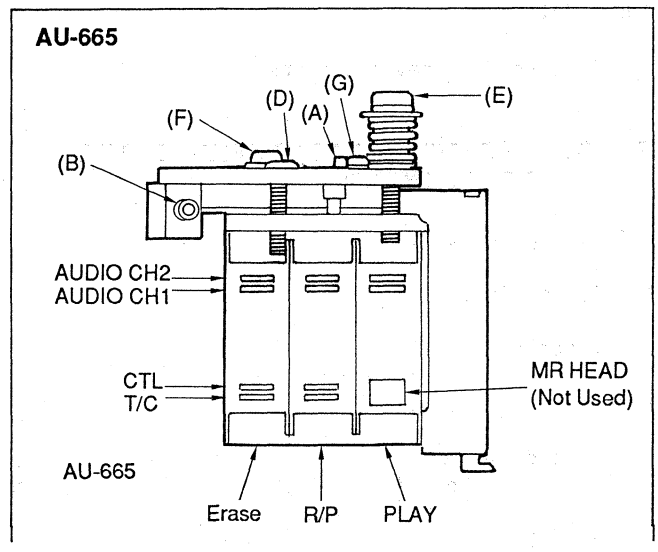

AU-65

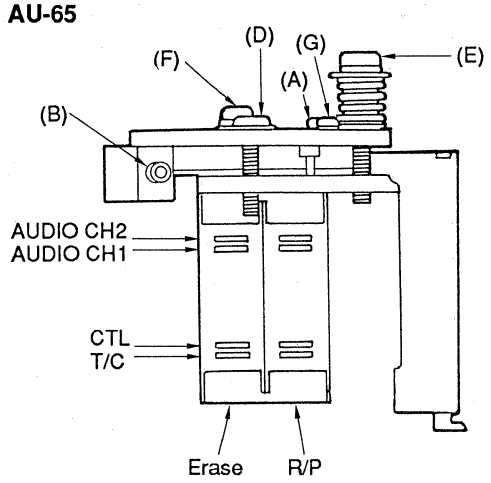

AU-63/62

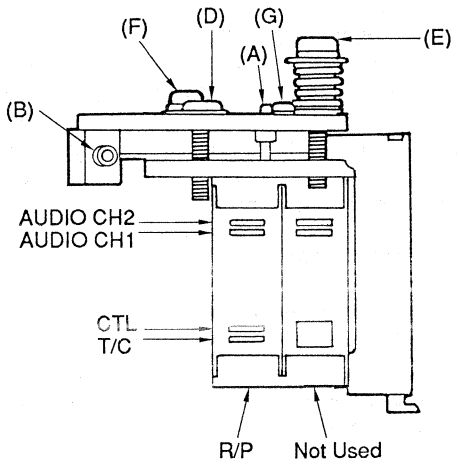

Fig. 3-10-7 A/C Head for Each Models

When adjust the A/C head assembly perform the following conditions.

*In order to keep the flat envelope, observe the RF envelope (Y or C) at the same time.
*In order to avoid the tape damage, always check that the tape curling does not occur at P5 and P6 post
*Head select switch on the pull out drawer is set to R/P HEAD position for AU-665 and disconnect P10 on AT POWER P.C.Board to stop the Auto Tracking function for AU-63.
*Follow the flow chart when adjust the A/C Head assembly as shown in figure 3-10-8.
*When adjust the audio level, use the following test points as shown in figure 3-10-9.

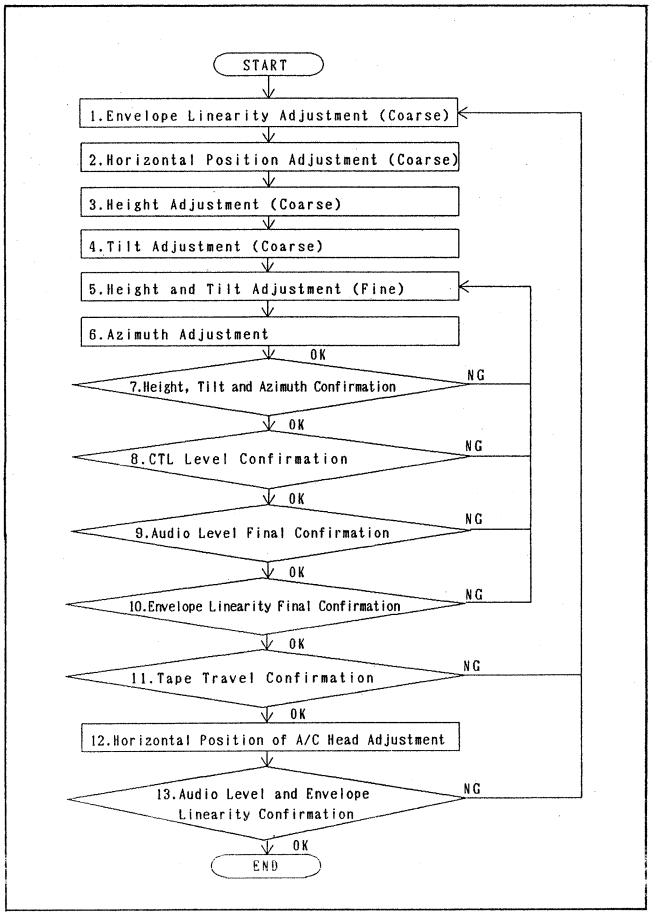

Fig. 3-10-8 A/C Head Adjustment Flow Chart

Output Signal	P.C.Board	Test Point	Remarks
Y RF (R/P Head)	W3 (MOD/DEMOD)	TP301	also available WFM OUT for AU-665 only
C RF (R/P Head)	W3 (MOD/DEMOD)	TP701	
Head Switching	W5 (SERVO)	TP7	-------
Linear Audio CH1 (R/P Head)	W6 (AUDIO)	TP101	also available AUDIO OUT
Linear Audio CH2 (R/P Head)	W6 (AUDIO)	TP301	
Linear Audio CH1 (Monitor Head)	W6 (AUDIO)	TP271	for AU-665 only
Linear Audio CH2 (Monitor Head)	W6 (AUDIO)	TP471	
CTL Pulse	W5 (SERVO)	TP109	-------

Fig. 3-10-9 Test Point Chart

1) ENVELOPE LINEARITY ADJUSTMENT (COARSE)

Note :
Tape tension is completely adjusted.

1. Connect the scope CH1 to Y or C RF out (refer to Test Point Chart) and CH2 to TP7 on the W5 SERVO to trigger the scope.
2. Playback the linearity portion of the alignment tape.
3. In order to achieve the roughly flat envelope, tighten the nut (C) clockwise so that the CTL head touches the tape CTL track and servo is locked. At that time, make sure the RF envelope is maximized on the Tracking meter by using the Tracking VR.
4. Confirm that the tape is not curling at P5 and P6 post as shown in figure 3-10-10.
5. If the tape is curling at P5 and P6, readjust the A/C Head height by nut (c), or adjust the A/C Head Tilt by hex screw (A). (Do not adjust the P5 and P6 upper flange)

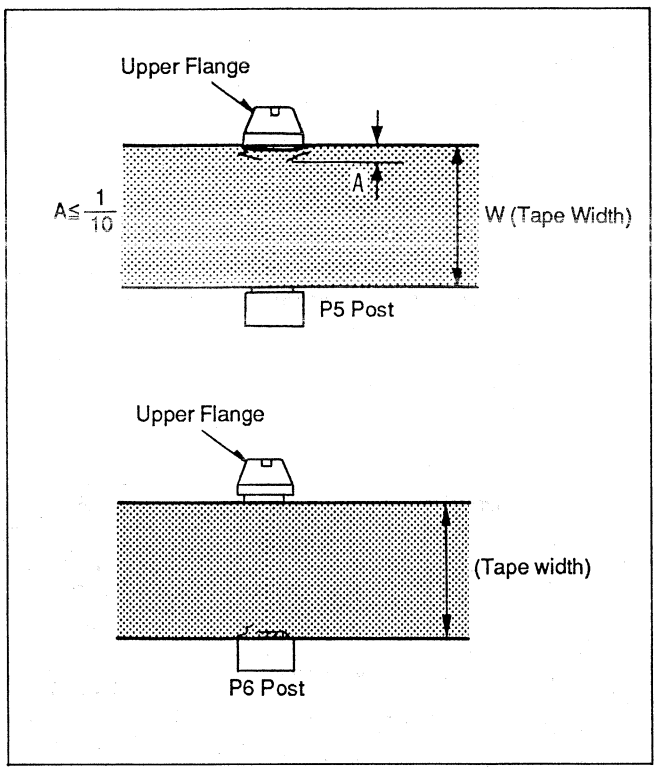

Fig. 3-10-10 Deforming Spec

2) HORIZONTAL POSITION ADJUSTMENT (COARSE)

1. Connect the scope CH1 to Y or C RF out (refer to Test Point Chart) and CH2 to TP7 on the W5 SERVO to trigger the scope.
2. Playback the linearity portion of the alignment tape and confirm that the Tracking VR is center detent position.
3. Loosen the 2 screws (F), (G) 1/4 of a turn counterclockwise and insert the eccentric screw driver into the hole (H) as shown in figure 3-10-11.
4. Turn the eccentric screwdriver and adjust the horizontal position of the A/C Head so that the RF envelope is maximum, on the Tracking meter on the front panel.
5. Alternately tighten 2 screws (F), (G) until both screws are tight.

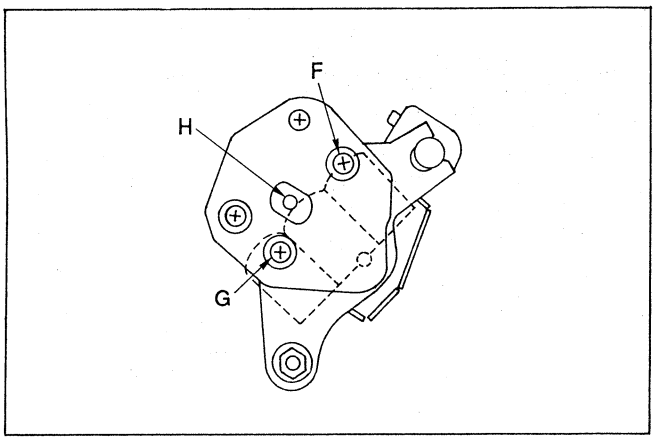

Fig. 3-10-11 Horizontal Position

3) HEIGHT ADJUSTMENT (COARSE)

1. Playback the 7.5KHz portion of the alignment tape.
2. Adjust the nut (C) so that the audio levels, CH1 and CH2 are maximized on the audio level meter on the front panel.

4) TILT ADJUSTMENT (COARSE)

1. Playback the 7.5KHz portion of the alignment tape.
2. Adjust hex (A) screw so that the CH1 and CH2 audio levels are increased maximum at the audio level meter on the front panel.

5) HEIGHT AND TILT ADJUSTMENT (FINE)

Note :
Observe the audio level, CH1 audio is reference for A/C Head mechanical adjustment. Because the CH2 audio track is sometimes edge damaged at P5 upper flange.

1. Connect the scope CH1 to TP101 and CH2 to TP301 on the W6 AUDIO P.C.Board.
2. Playback the 7.5KHz portion of the alignment tape.
3. In order to check the A/C Head height, gently press down the tape upper edge from the top (slight finger pressure) at A/C Head entrance side as shown in figure 3-10-12 and check the audio level.
4. If the audio level increases, turn the nut (C) counterclockwise slightly so that the audio level is increased as shown in figure 3-10-13.

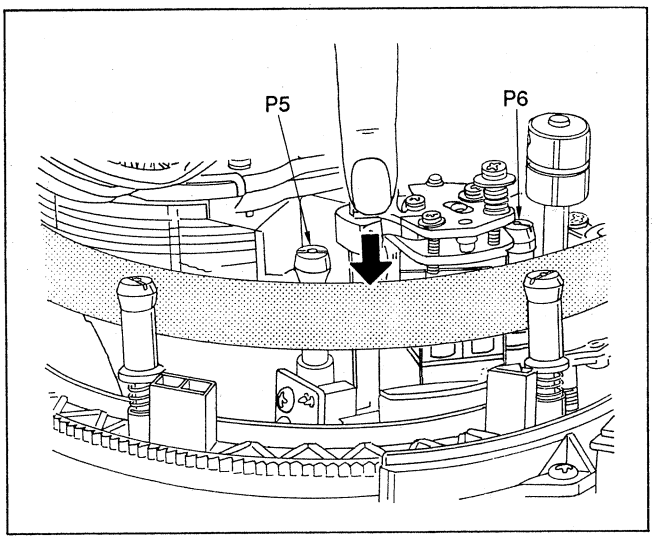

Fig. 3-10-12 A/C Head Height Check (1)

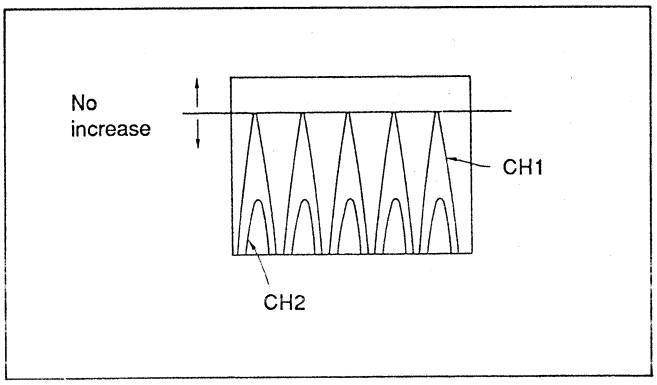

Fig. 3-10-13 Audio Level

5. Gently press up the tape lower edge from the bottom (by using the hex wrench) at A/C Head exit side as shown in figure 3-10-14 and check the audio level.
6. If the audio level increases, turn the nut (C) clockwise slightly so that the audio level is maximized as shown in figure 3-10-13.

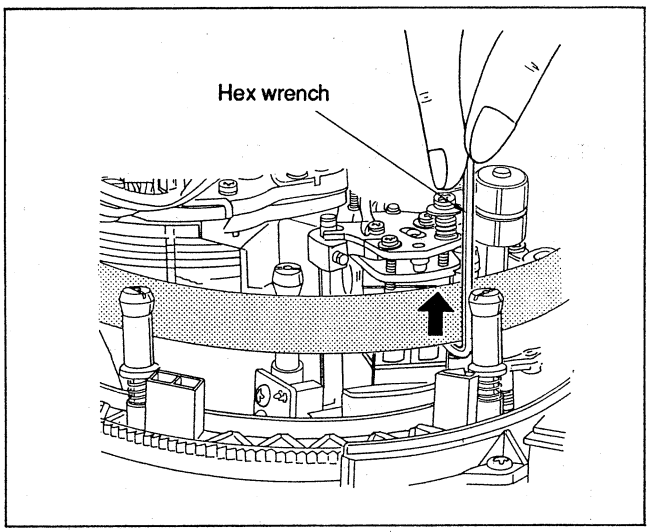

Fig. 3-10-14 A/C Head Height Check (2)

7. Tighten the hex screw (B).

Note :
When the hex screw (B) is tightened, audio azimuth will change. In this case, adjust 2 screws (D) and (E) to achieve a roughly same azimuth.

8. In order to check the A/C Head Tilt, gently press the tape upper edge from the side (slight finger pressure) at A/C Head entrance side as shown in figure 3-10-15 and check the audio level.
9. If the audio level is increased, turn the hex screw (A) counterclockwise slightly so that the audio level is increased maximum as shown in figure 3-10-13.
10. After adjustment of tilt, A/C Head height reconfirmation is necessary.

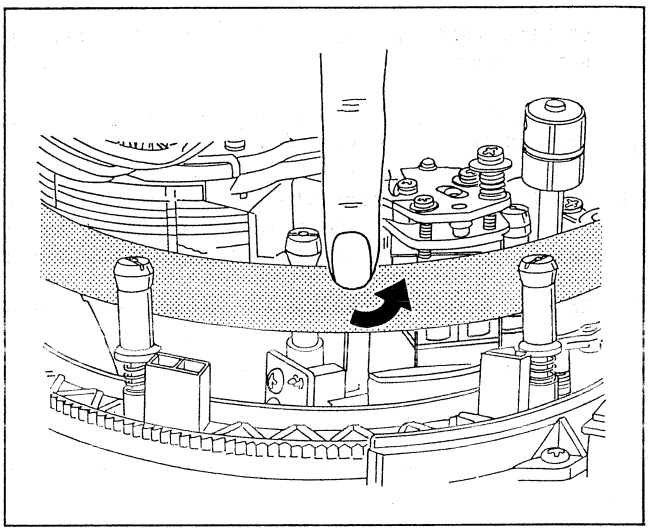

Fig. 3-10-15 A/C Head Tilt Check

6) AZIMUTH ADJUSTMENT

1. Connect the scope CH1 to TP101 and CH2 to TP301 on the W6 AUDIO P.C.Board.
2. Playback the 15KHz portion of the alignment tape.
3. Loosen screw (E) and adjust the screw (D) so that the CH1 and CH2 phase are the same as shown in figure 3-10-16 and 3-10-17.

   for AU-65/63/62: +/- 15 degree (+/- 2.78 usec)
   for AU-665 : +/- 10 degree (+/- 1.85 usec)

4. Hold a maximum audio level and tighten the 2 screws with (D) and (E) slightly.
5. Confirm that the audio level is maximum.

7) HEIGHT, TILT AND AZIMUTH CONFIRMATION

1. Connect the scope CH1 to TP101 and CH2 to TP301 on the W6 AUDIO P.C.Board.
2. Playback the 7.5KHz portion of the alignment tape for check the height and Tilt.
3. Gently press down the tape upper edge from the top (slight finger pressure) at A/C Head entrance side as shown in figure 3-10-12 and check the audio level.

4. If the audio level is increased, turn the nut (C) counterclockwise slightly so that the audio level is increased.
5. Gently press up the tape lower edge from the bottom (by using the hex wrench or something) at A/C Head exit side as shown in figure 3-10-14 and check the audio level.
6. If the audio level is increased, turn the nut (C) clockwise slightly so that the audio level is maximized.
7. Gently press the tape upper edge from the side (slight finger pressure) at A/C Head entrance side as shown in figure 3-10-15 and check the audio level.
8. If the audio level is increased, turn the hex screw (A) counterclockwise with small order so that the audio level is increased maximum as shown in figure 3-10-13.
9. Playback the 15KHz portion of the alignment tape.
10. Confirm that the audio CH1 and CH2 phase is same azimuth.

    for AU-65/63/62: +/- 15 degree (+/- 2.78 usec)
    for AU-665 : +/- 10 degree (+/- 1.85 usec)

11. If it is not, loosen the screw (E) and adjust the screw (D) so that the 2 channels audio phase is same as shown in figure 3-10-16 and 3-10-17.
12. Hold a same audio phase and maximum audio level and alternately tighten up the 2 screws (D) and (E) until both screws are tight.
13. Confirm that the audio level is maximum.

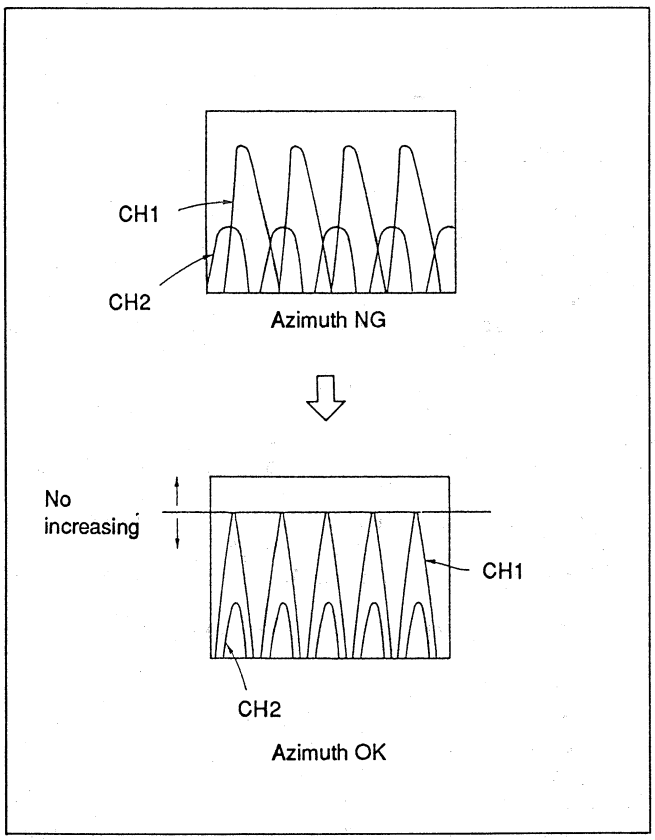

Fig. 3-10-16 Audio Azimuth (1)

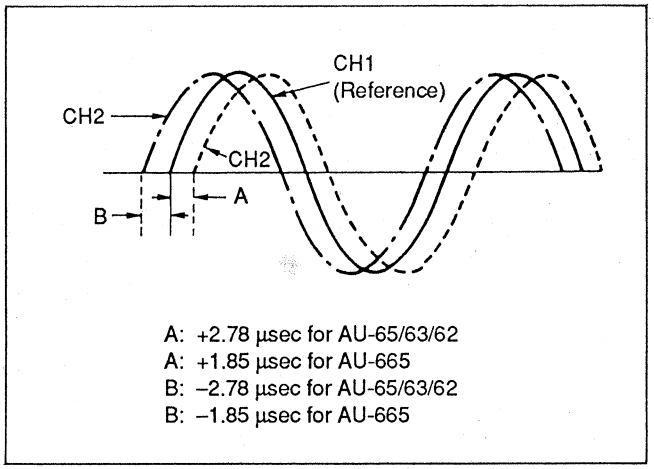

Fig. 3-10-17 Audio Azimuth (2)

8) CTL LEVEL CONFIRMATION

1. Connect the scope TP109 on the W5 SERVO P.C.Board.
2. Playback the 7.5KHz portion of the alignment tape.
3. Confirm that the CTL pulse is more than 1.2Vp-p as shown in figure 3-10-18.
4. If it is not, readjust the nut (C) and hex screw (A).
5. After readjustment, audio level confirmation is necessary.

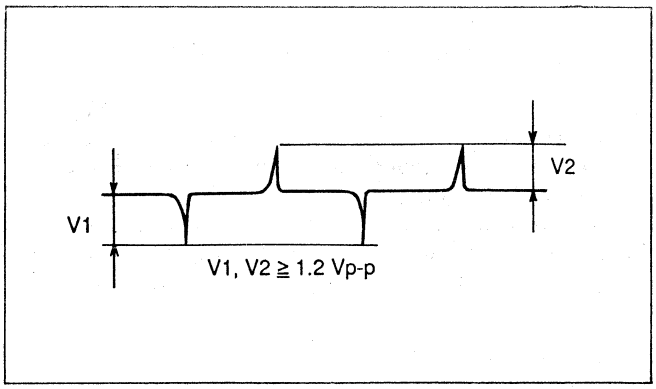

Fig. 3-10-18 CTL Pulse

9) AUDIO LEVEL FINAL CONFIRMATION

1. Connect the scope CH1 to TP101 and CH2 to TP301 on the W6 AUDIO P.C.Board.
2. Playback the 7.5KHz portion of the alignment tape.
3. Gently press up and down on the tape edge at A/C Head entrance side and A/C Head exit side. (refer to height and Tilt adjustment)
4. If audio level increases, readjust the nut (C) or hex (A) screw as needed.
5. Pull the Audio PB VR on the front panel and set the audio level 0 dB by adjusting the Audio PB VR.
6. Gently tap the supply tension arm and confirm the audio level as shown in figure 3-10-19.

7. If the audio level is increased more than +0.3dB at Audio Meter, readjust the hex screw (A).

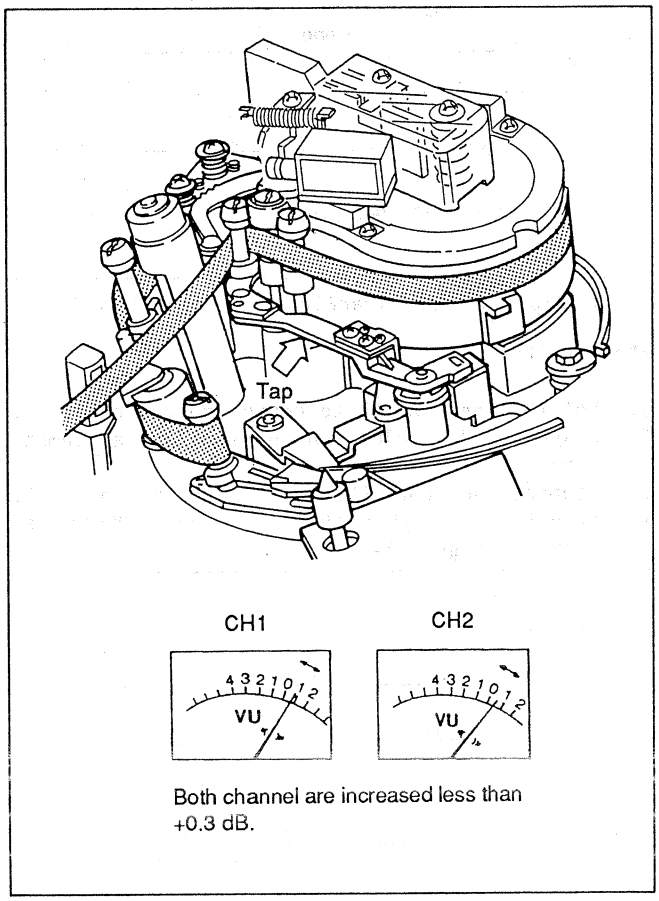

Fig. 3-10-19 Audio Level Final Check

Following steps are monitor head tilt confirmation for AU-665 only;

8. Supply a 10KHz sinewave to AUDIO IN and record the signal.
9. Set the HEAD SELECT switch to TAPE position.
10. Pull the Audio REC VR on the front panel and set the audio level 0dB by adjusting the Audio REC VR.
11. During recording, gently tap the supply tension arm and confirm that the Audio Meter indication is within +/-1dB.
12. If it is not, readjust the hex screw (A).

10) ENVELOPE LINEARITY FINAL CONFIRMATION

1. Connect the scope CH1 to Y or C RF out (refer to Test Point Chart) and connect the scope CH2 to TP7 on the W5 SERVO P.C.Board for trigger the scope.
2. Playback the linearity portion of the alignment tape.
3. Confirm that the RF envelope is within specification as shown in figure 3-10-20.
4. If the RF envelope exit side is compressed, slightly adjust the P5 upper flange to make a flat envelope and confirm the audio level again.

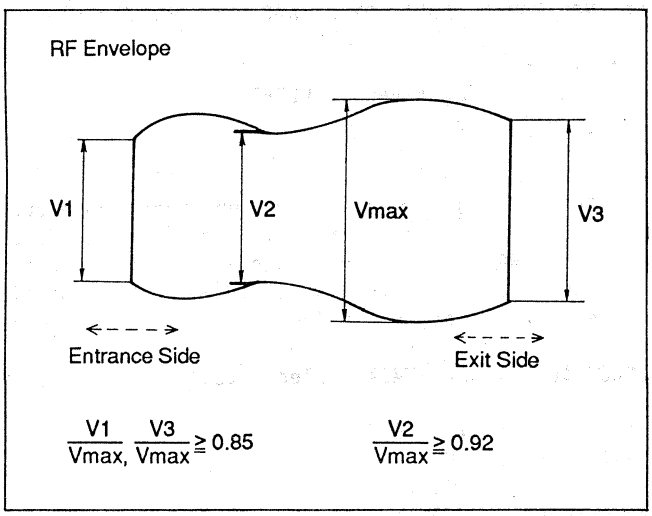

Fig. 3-10-20 Envelope Specification

11) TAPE TRAVEL CONFIRMATION

1. After the A/C head adjustment has been completed, observe the lower flange of the P6 post during playback. The bottom edge of the tape should just touch the lower flange of the P6 post. If not, first of all confirm the A/C Head height and tilt.

Note:
When the P5 and P6 post have to be readjusted due to tape curling or wrinkling, always recheck the playback RF envelope, A/C head height, tilt, and azimuth.

2. After confirmation or adjustment of the P6 post, place the unit in the reverse playback mode (SHTL x-1). Make sure that the bottom edge of the tape just touches the lower flange of the P6 post without tape curling. If the tape curling occurs at the buttom flange of the P6 post, adjust the tilt of A/C Head refer to page 3-27. However, if the curling doesn't cancel at the P6 post by adjusting A/C Head tilt, raise both P8 and P9 post up slightly, then raise the P7 post until the tape curling disappears.
3. In the SHTL x1 playback mode, if tape curling is seen at the lower edge of the P8 post, then raise the P9 post as needed.
4. In all modes (SHTL x1 to x32, SHTL x-1 to x-32), tape curling should not occur at the flanges of the P6, P7, P8, and P9 posts. Readjust each post flange as needed if tape curling should occur.
5. Position P11 and P12 so that the tape path is in the middle of these post.

Note:
Make sure that all hex screws on the post are tightened securely.

12) HORIZONTAL POSITION OF A/C HEAD ADJUSTMENT

***Tools Required :**
Eccentric Screwdriver (VFK0357)
Alignment Tape

Note:
Before this adjustment is performed, envelope output, A/C head height and azimuth, and TRACKING FIX ADJUSTMENT should be confirmed or completed. (Refer to TRACKING FIX ADJ. of electrical adjustment)

TRACKING FIX ADJUSTMENT (Electrical)

Board : W5 SERVO
Test Point : TP3
TP110
Adjustment : VR3

<For AU-65/665>

1. Supply a 75% component color bar to COMPONENT 2 INPUT on the rear panel.
2. Set a HEAD SELECT to R/P position and TAPE/EE to EE position.
3. Set a Tracking VR to center detent position.
4. Make a recording and then playback the just recorded portion.
5. Connect a scope CH1 to TP3 and CH2 to TP110.
6. Adjust VR3 so that the T = 0 +/- 100usec as shown in figure 3-10-21.

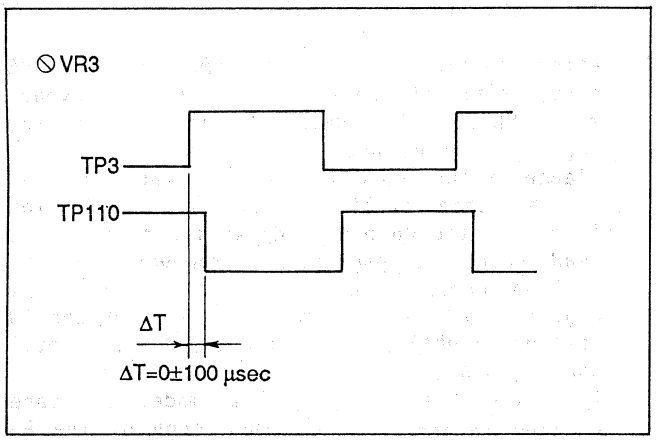

Fig. 3-10-21 Tracking Fix Adj. (AU-65/665)

<For AU-63>

1. Playback the color bar portion of the alignment tape.
2. Disconnect the P10 connector on the AT Power P.C.Board.
3. Connect a scope CH1 to TP3 and CH2 to TP110.
4. Set the sweep range of scope so that the "A" width becomes 9 lines.
5. Adjust VR3 so that the T = 3 +/- 0.1 lines as shown in figure 3-10-22.
6. Connect the P10 connector to the AT Power P.C.Board.

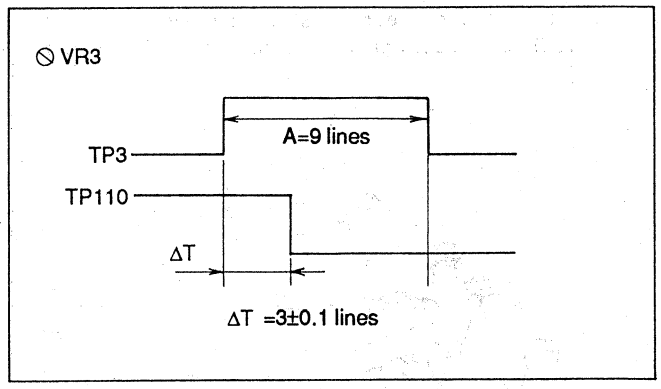

Fig. 3-10-22 Tracking Fix Adj. (AU-63)

<For AU-62>

1. Set the Tracking VR to center detent position.
2. Playback the color bar portion of alignment tape.
3. Connect the scope CH1 to TP3 and CH2 to TP110.
4. Adjust VR3 so that the T = 0 +/- 100usec as shown in figure 3-10-23.

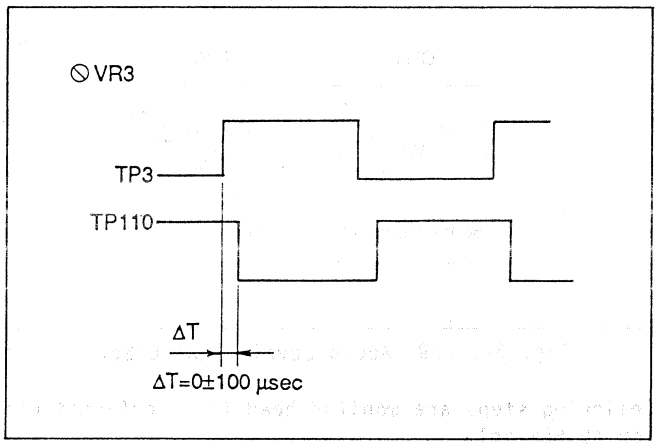

Fig. 3-10-23 Tracking Fix Adj. (AU-62)

HORIZONTAL POSITION ADJUSTMENT (Mechanical)

1. Insert the alignment tape, and playback the Field Skip portion.
2. Set the tracking control on the front panel to the center detent position.
3. Set the HEAD SELECT to R/P for AU-665 or disconnect the P10 on the AT POWER P.C.Board for AU-63.
4. Connect the scope CH1 to TP301 on the W3 MODULATION & DEMODULATION P.C.Board and CH2 to TP301 on the W6 AUDIO P.C.Board.
5. Confirm that the skip portion is in the same position.
6. If not, loosen the 2 screws (F) and (G) a 1/4 of a turn and insert the eccentric screw driver into hole (H) as shown in figure 3-10-24.
7. Roughly adjust the A/C head assembly by turning the eccentric screwdriver so that the skip portion is in the same position as shown in figure 3-10-25.
8. If the skip portion is shifted causing by CTL head incorrect position, readjust the A/C head. (After that, audio level confirmation is necessary.)

9. Playback the linearity portion of the alignment tape.
10. Confirm that the envelope level is maximized at Tracking VR detent position.
11. If it is not, slightly adjust the A/C Head assembly by turning the eccentric screwdriver so that the Y RF envelope is maximized.
12. Alternately tighten the 2 screws (F) and (G) until both screws are tight.
13. Connect the P10 to AT POWER P.C.Board for AU-63.

Note:
After this adjustment, confirm the audio height tilt and azimuth.

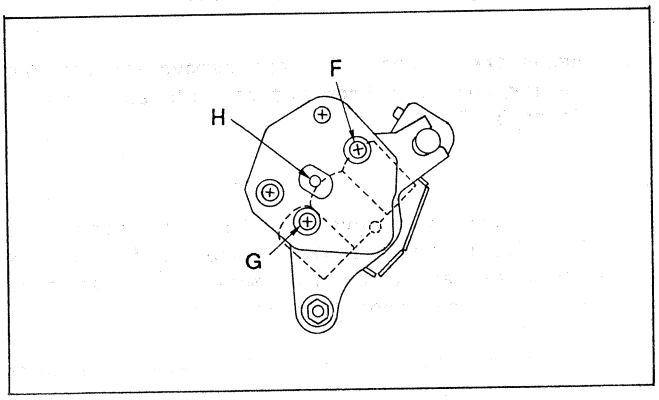

Fig. 3-10-24 Horizontal Position

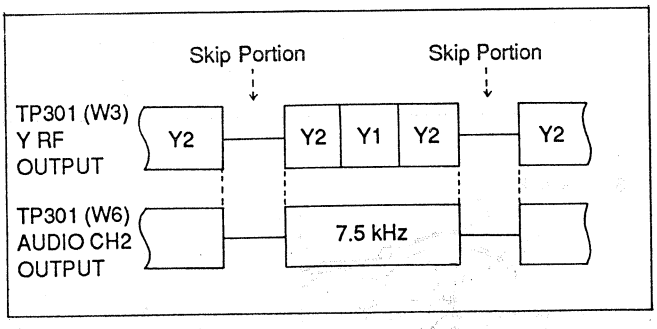

Fig. 3-10-25 Skip Portion

3-10-4. Electrical adjustment

After replacing, perform the following electrical adjustment.

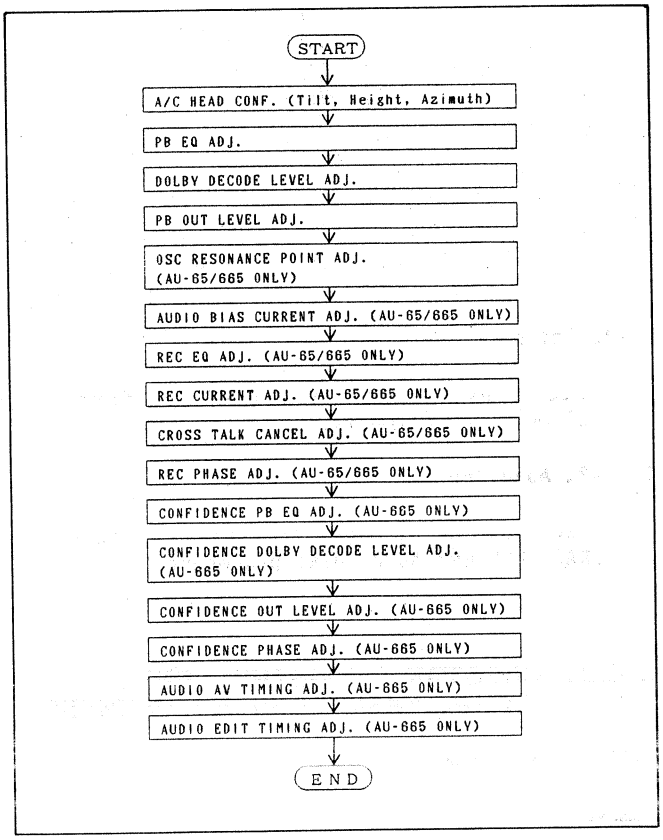

3-11. FULL ERASE HEAD REPLACEMENT AND ADJUSTMENT

3-11-1. Replacement

Removal

1. Unsolder 2 leads on the erase head as shown in figure 3-11-1. (for AU-65/665)
2. Remove the 2 screws (A) and remove the full erase head assembly. (Fig. 3-11-1)
3. Remove the screw (B) and remove the head.

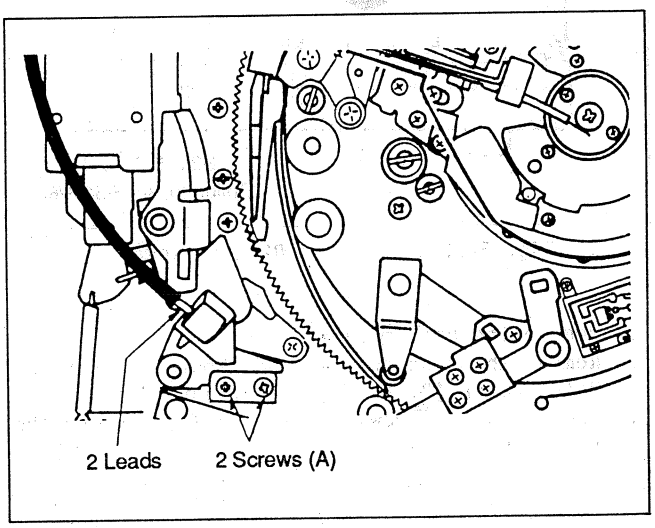

Fig. 3-11-1 Full Erase Unit

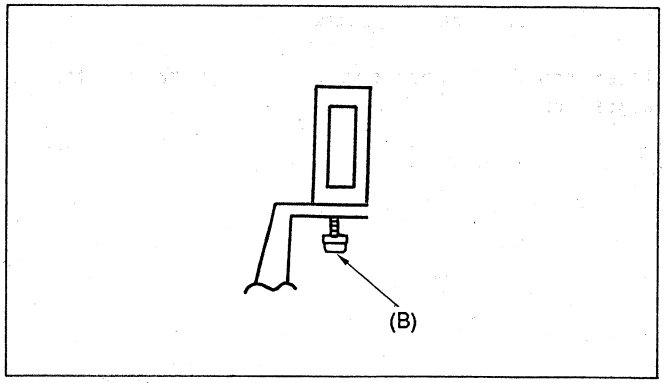

Fig. 3-11-2 Full Erase Unit

Installation

1. After installing the head, perform the following adjustments.

3-11-2. Adjustment

1. Check and adjustments according to the FULL ERASE CURRENT ADJUSTMENT procedure.

3-12. CAPSTAN HOUSING UNIT REPLACEMENT AND ADJUSTMENT

3-12-1. Replacement

Removal

1. Remove the B1 SYSTEM CONTROL and B2 TCG/TCR (option for AU-65/63/62) P.C.Board from front-sub panel as shown below.

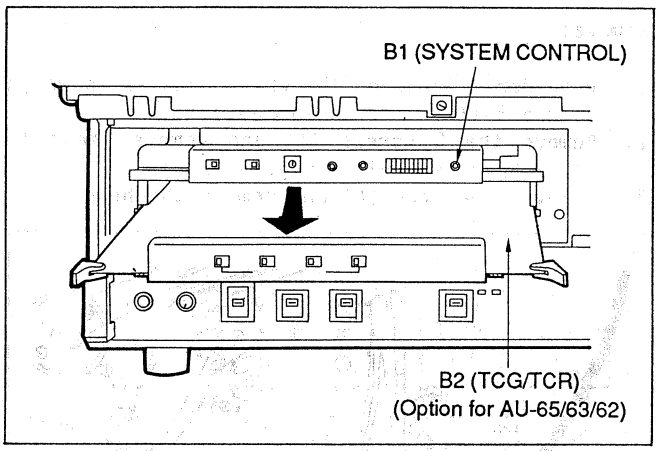

Fig. 3-12-1. B1 and B2 unit Removal

2. Remove the bottom panel.
3. Remove the 2 screws (A) and remove the Capstan Motor Cover (B) as shown in figure 3-12-2.
4. Remove the 3 screws (C) and pull to remove the rotor (E).

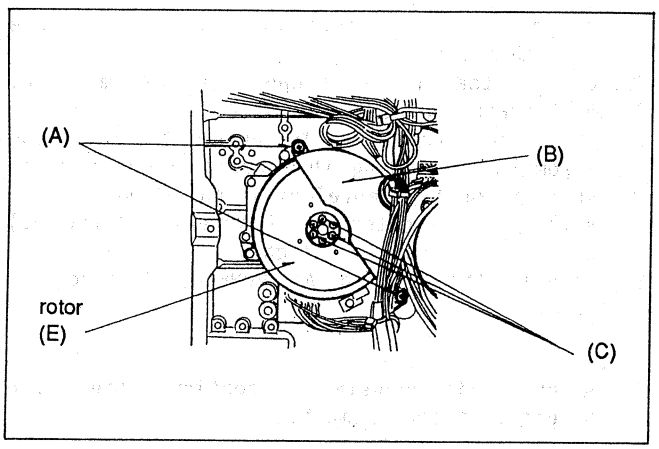

Fig. 3-12-2 Capstan Motor

5. Remove the 3 screws (F) and remove the Capstan Housing unit (G) from bottom side as shown in figure 3-12-3.

Note:
How to easily remove the Capstan rotor unit (E). Since the Capstan rotor unit (E) is hardly attracted by the magnet, please make the following steps to remove it.

1. Prepare the long size 3 screws as a same type's screw (C).
2. Install the long size 3 screws to screw (C) holes and the Capstan rotor unit (E) by tightening the 3 screws.
3. Then remove the Capstan rotor unit (E).

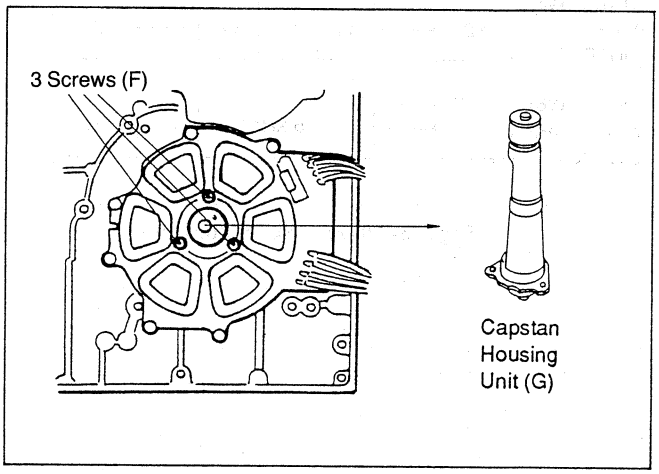

Fig. 3-12-3 Capstan Housing Unit

Installation

1. Reverse the previous steps in reverse order.

3-12-2. Adjustment

1. Check adjustments according to the TRACKING FIX ADJUSTMENT procedure.

3-13. PINCH ROLLER SOLENOID REPLACEMENT AND ADJUSTMENT

3-13-1. Replacement

Removal

1. Remove the bottom panel and disconnect the connector (P405) on the MECH. INTERFACE CIRCUIT P.C.Board.

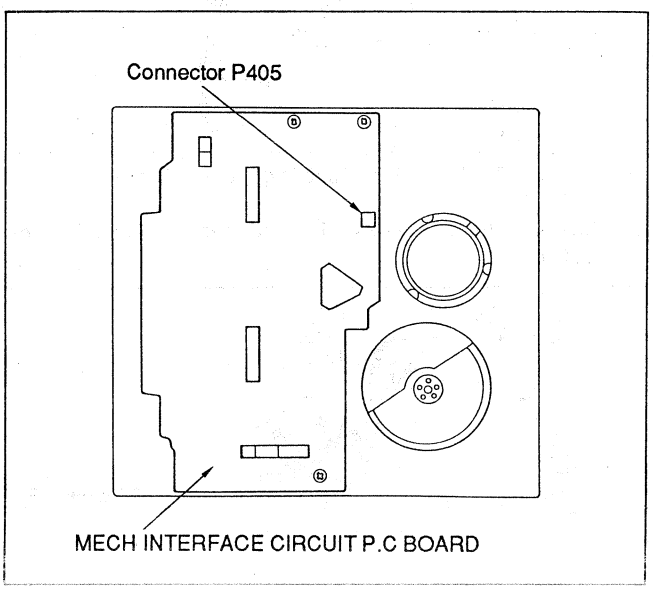

Fig. 3-13-1 Location of Connector P405

2. Remove the 3 screws (A) as shown in figure 3-13-2.
3. Remove the pinch solenoid.

Installation

1. Follow the removal steps in reverse order.

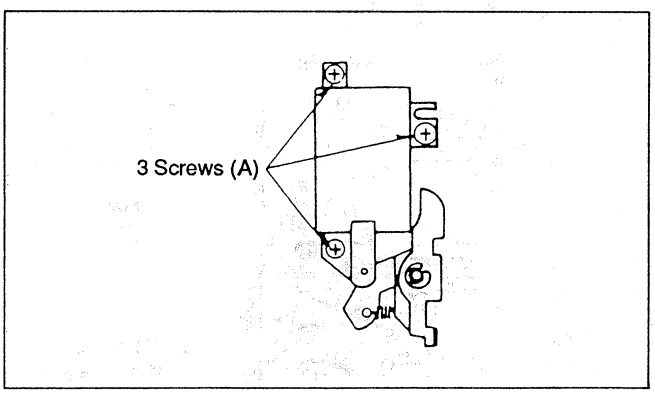

Fig. 3-13-2 Pinch Roller Solenoid

3-13-2. Adjustment

***Tools Required:**
Eccentric Screwdriver (VFK0358)
Dummy Plug 1 (VFK0361)
Fan Type Tension Gauge (VFK66)

1. Remove the front loading (CARRIAGE) unit and connect the Dummy Plug 1 (VFK0361) into to P406.
2. Play back a tape and measure the clearance (B) as indicated in figure 3-13-3. Verify that it is 1.3mm +/-0.2mm.
3. If not, loosen the 3 screws (A) (figure 3-13-3) and insert the eccentric screwdriver into hole (C).
4. Adjust the Pinch roller solenoid position with the eccentric screwdriver so that the clearance (B) is 1.3mm (+/-0.2mm).
5. Tighten the 3 screws (D).
6. Insert a work cassette and play back the tape.
7. Insert a 1.2mm thickness gauge to clearance (B).
8. Place the fan type tension gauge so that it's tip contacts the position (A) as shown in figure 3-13-3.
9. Push the tension gauge in the direction indicated by arrow Y in figure 3-13-3.
10. Confirm that the placed thickness gauge is dropped when the tension gauge reading is 1900 +/-100 grams.
11. If it is not change the position of the spring as shown in figure 3-13-3.

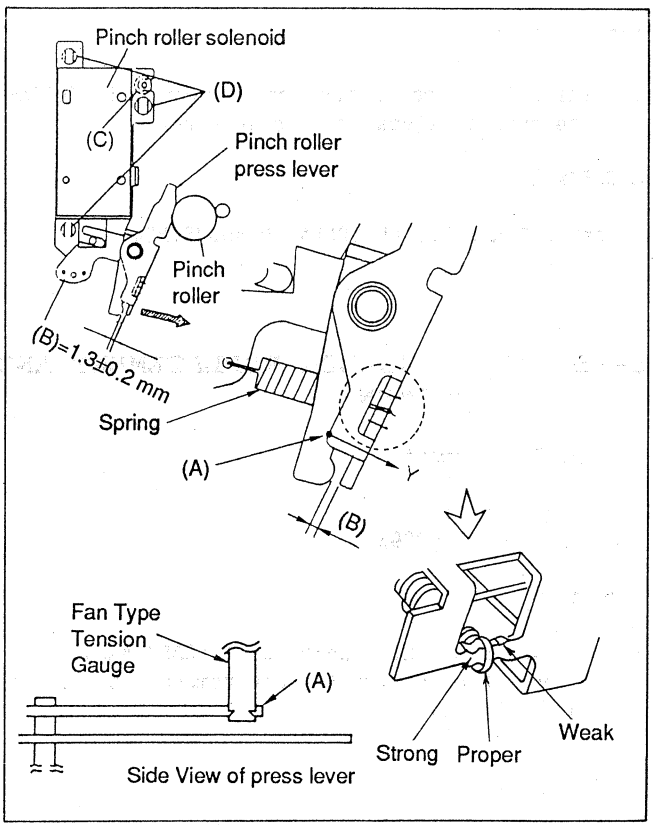

Fig. 3-13-3 Pinch Roller

3-14. PINCH PRESS LEVER REPLACEMENT AND ADJUSTMENT

REMOVAL

1. Remove the pinch solenoid (refer to pinch solenoid replacement section).
2. Remove the spring as shown in figure 3-14-1.
3. Remove the E-ring and washer as shown in figure 3-14-1.
4. Remove the Pinch Press Lever.

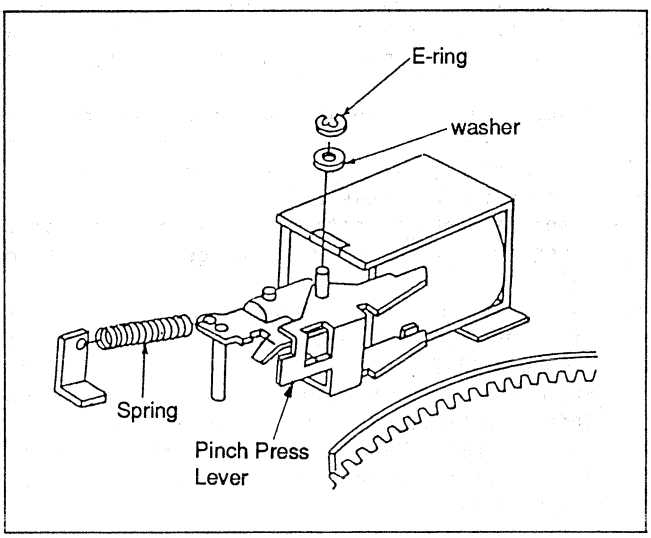

Fig. 3-14-1 Pinch Press Lever

INSTALLATION

1. Install the new Pinch Press Lever and follow the removal steps in reverse order.

ADJUSTMENT

Refer to PINCH ROLLER SOLENOID ADJUSTMENT

3-15. TIMER ROLLER REPLACEMENT AND ADJUSTMENT

3-15-1. Replacement

***Tool required :**
Post Driver (VFK0293)

Removal

1. Remove the front loading unit (CARRIAGE).
2. Remove the 4 screws (A) and remove Sub-loading cover assembly.

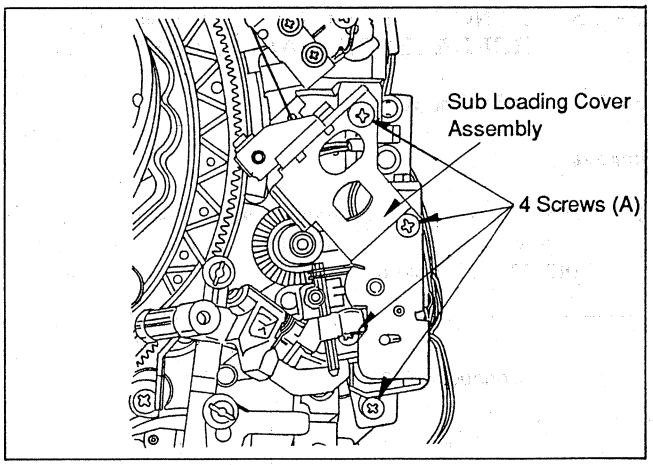

Fig. 3-15-1 Sub-loading Cover Removal

3. Remove the 3 screws (B) and remove Turn Roller Lifter

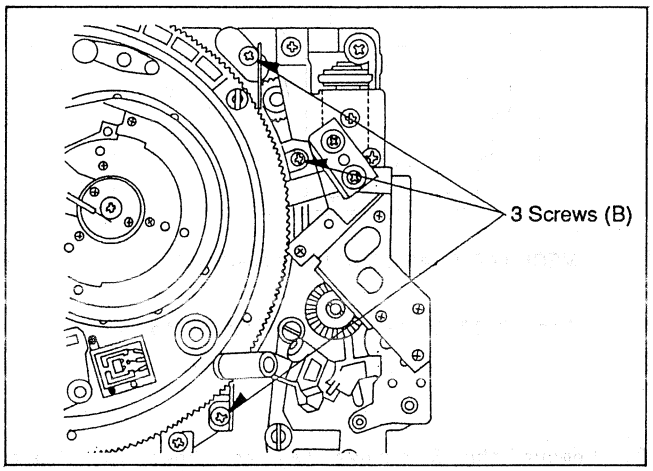

Fig. 3-15-2 Turn Roller Lifter

4. Remove the 2 screws (C) and remove TR Sensor P.C.Board.

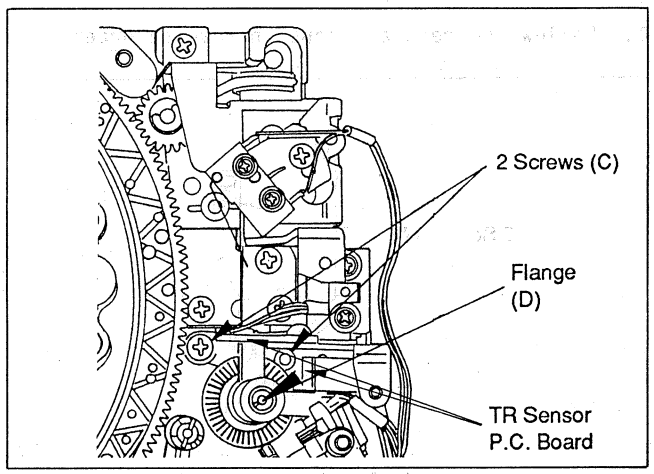

Fig. 3-15-3 Timer Roller

5. Loosen the flange (D) and remove (Do not loosen the Hex Screw) then remove the bearing (E) and collar (F).
   (Use a tweezer so that it is easy to remove)
6. Remove the timer roller unit.
   After removing, remove the bearing (G).

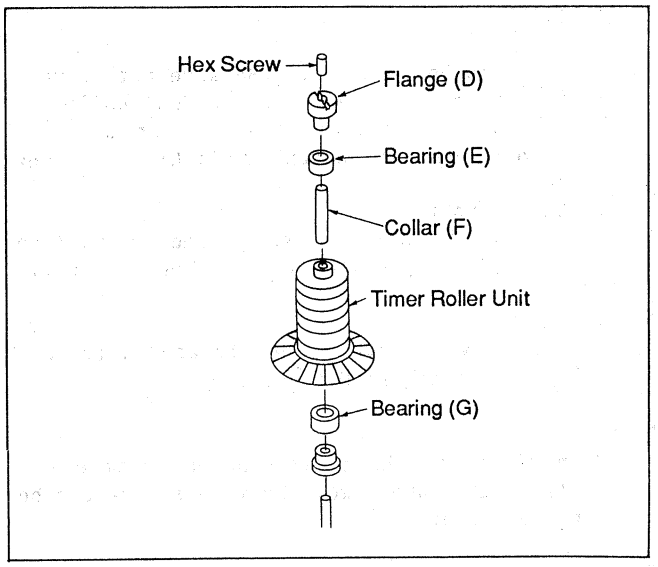

Fig. 3-15-4 Construction of TR

Installation

1. Insert the bearing (G) before install the Timer Roller unit.
2. Install the Timer Roller unit, after that, insert the collar (F) and bearing (E) to the Timer Roller unit.
3. Insert the flange (E) to the Timer Roller unit. (Do not tighten the hex screw)
4. After the installation, perform the following adjustments.

3-15-2. Adjustment

1) Timer Roller height Adjustment

***Tool Required:**
Post Driver (VFK0293)

1. Play back the MPL90 tape to make sure the tape edges do not come into the grooves on the timer roller in any mode.
2. If the above requirement is not satisfied, loosen Hex-Screw (L) and turn flange (K) for height adjustment.
3. Finally, be sure to tighten up Hex-Screw (L).

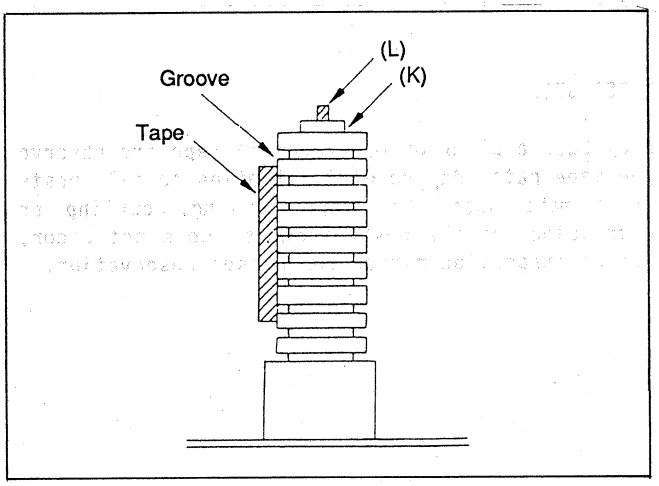

Fig. 3-15-3 Timer Roller Height

2) Timer Roller Position Adjustment

***Tools required:**
Eccentric Screwdriver (VFK0358)
Dual Channel Oscilloscope

1. Connect the scope CH1 to TP202 (W5) and CH2 to TP201 (W5) on the servo P.C.B.
2. Playback the color bar portion of the alignment tape.
3. Loosen the 2 screws (C), as shown in figure 3-15-4.
4. Insert the eccentric screwdriver into hole (D) (figure 3-15-4).
5. Turn the eccentric screwdriver until the two waveforms are 90 degrees apart A=B +/- 10% as shown in figure 3-15-5.
6. Tighten the 2 screws (C).

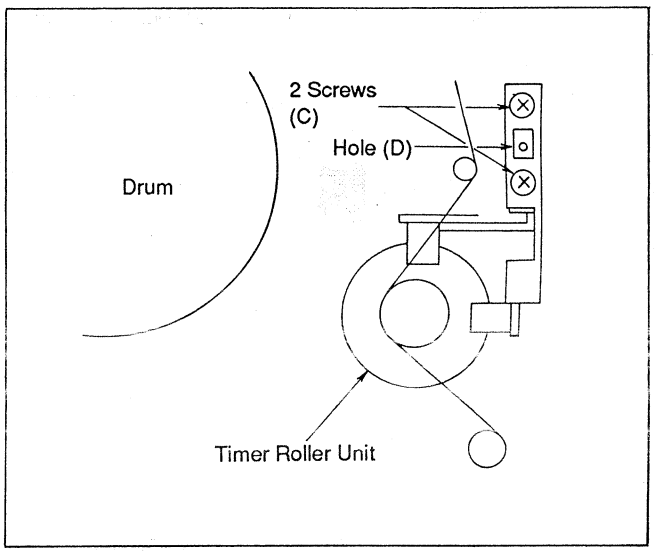

Fig. 3-15-4 Timer Roller

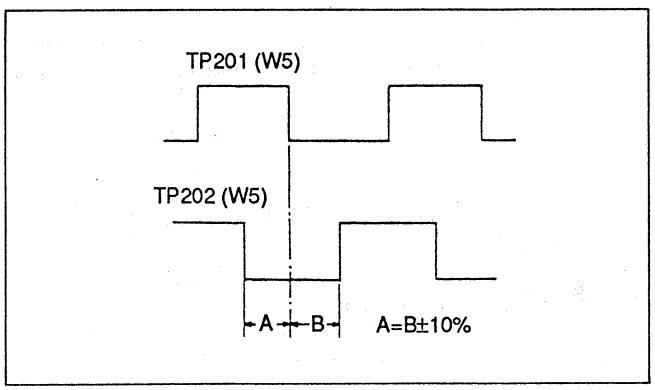

Fig. 3-15-5 Timer Roller Phase

3-16. POST ROLLER UNIT REPLACEMENT AND ADJUSTMENT

1) POST ROLLER UNIT REPLACEMENT

Note :
When you replace a Post roller unit, install one at a time, and optimize its position. (Before replacing any more)

REMOVAL

1. Remove the front loading unit.
2. Only turn the upper flange counterclockwise and remove the upper flange of the post. (using post driver outer sleeve) Do not loose the hex screw when the upper flange is removed as shown in figure 3-16-1.
3. Remove the post roller unit (B) (Be sure not to lose the post spring (D) as shown in figure 3-16-2.

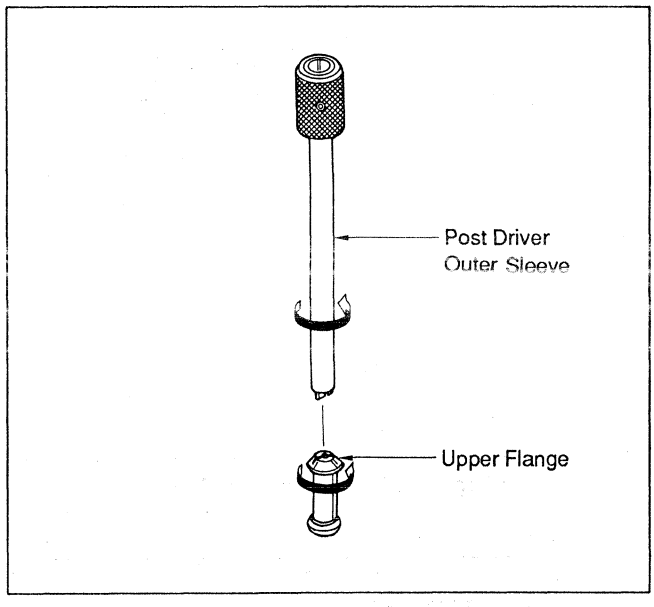

Fig. 3-16-1 Flange Removal

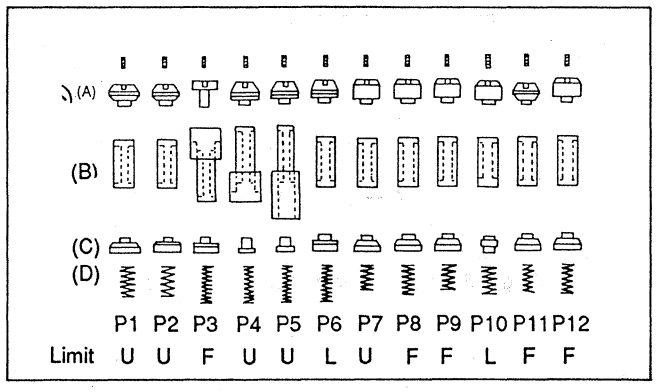

Fig. 3-16-2 Each Post Rollers

INSTALLATION

1. Install new Post Roller. (Be sure not to make a damaging or scratching to the Post Roller)
2. Install the upper flange (A) to the original position. (Do not loosen or tighten the hex screw)
3. Clean the post.
4. Play back the blank cassette and check tape travel. Then adjust the RF envelope linearity.

Note 1 :
P3 and P4 will have to be replaced together. (They can be adjusted together)

Note 2 :
When replacing the posts, do not remove all posts at the same time. (Only P3 and P4 can be replaced together)

Note 3 :
In order to ease linearity adjustment, always check the RF envelope after replaced each post.

2) RF ENVELOPE LINEARITY ADJUSTMENT

***Tools Required :**
Alignment tape
Post height fixture (VFK0363)
Mechanical Neutral Adjustment Plate (VFK0352)
Post Driver (VFK0293)
Hex Wrench (1.27mm)

GENERAL INSTRUCTIONS

The objectives of this adjustment are follows.

1. To insure smooth tape travel through the entire tape path without tape damage.
2. To obtain good envelope linearity of tape among all machines.

IMPORTANT NOTICE :

When adjust the envelope linearity of AU-63, make sure that the connector P10 on the AT POWER P.C.Board is disconnected to stop the Auto Tracking function.

FIRST STEP

Play back a blank or pre-recorded tape and observe the tape path. Pay careful attention to all posts and make sure that tape curling, curling or overriding on the post flanges does not occur, use an inspection mirror for closer observation.

SECOND STEP

If no tape damage occurs, then the alignment tape may be played back, and the RF envelope checked with an oscilloscope. The RF envelope should be flat. Envelope drop off is most likely to occur at the entrance and exit point (Head Switching point) of tape travel around the drum. This is shown in figure 3-16-3 and careful attention should be paid to these points.
Figure 3-16-4 shows the recommended sequence of adjustments in flow chart form.

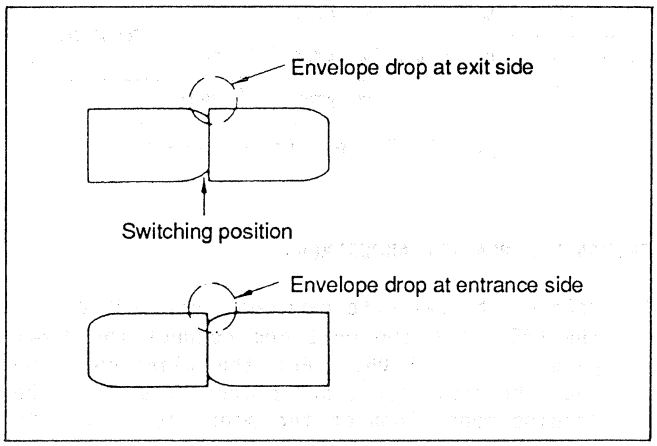

Fig. 3-16-3 Envelope Output

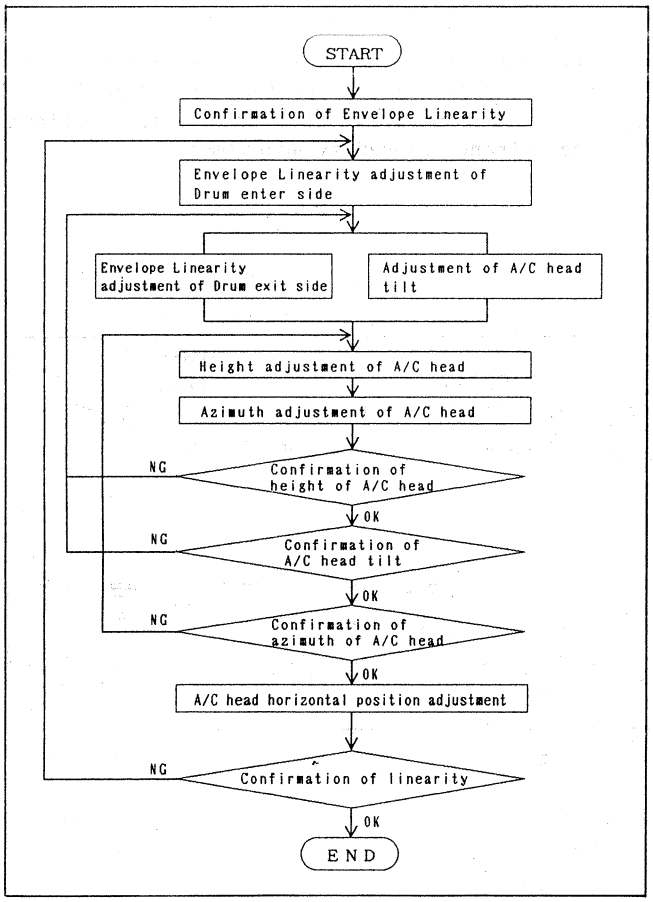

Fig. 3-16-4 Flow Chart

POST CONSTRUCTION

Figure 3-16-5 shows post construction.
The hex (set) screw in the center of the top of each post should be loosened with slightly before adjusting each post. When adjusting the post height, turn upper flange only. After making a flat envelope, hold a upper flange position and tighten up the hex screw. At that time upper flange is also tightened.
After setting the post height, make sure that no change in RF envelope when the hex screw is tightened.

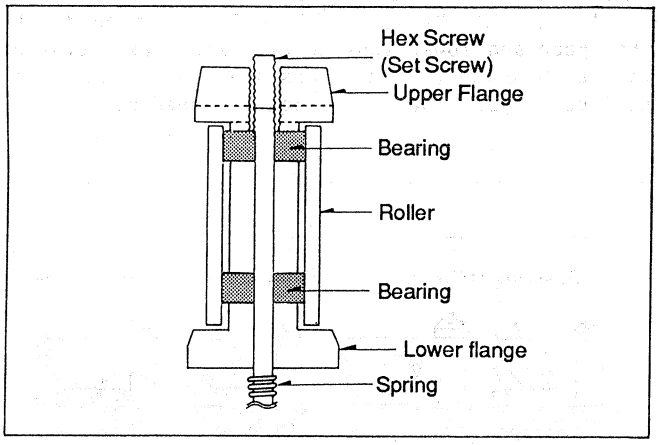

Fig. 3-16-5 Post Construction

Basically, Post Roller is positioned to original height after replacing (as long as, the hex screw is not misadjusted). However, in order to avoid the tape damage in Loading and Unloading mode, confirm that the height of the P1, P2, P11 and P12 posts are set to specified height, using MECH. plate and height fixture (VFK,363).

In order to do this, remove the cassette carriage unit, and install the mechanical neutral adjustment plate over the reel tables. Then place the post height fixture (VFK0363) on the Mechanical Neutral Adjustment Plate as shown in figure 3-16-6. (thumbscrews of neutral plate can be removed as needed) The upper and lower flanges of the P1, P2, P11 and P12 post should be touch the upper and lower surface of fixture as shown in figure 3-16-6. If these posts do not touch the surface, adjust the post height as needed.

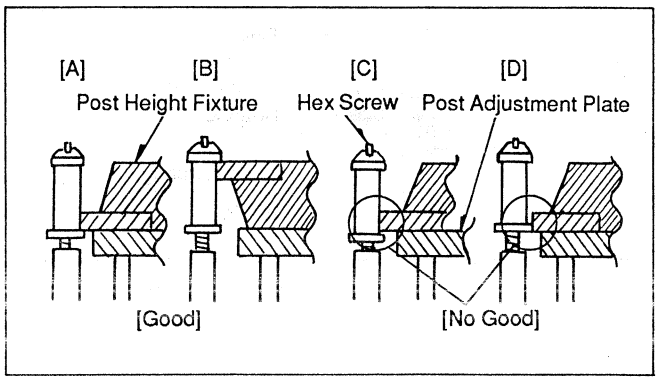

Fig. 3-16-6 Post Height Preadjustment

When adjust the envelope linearity, use the following test points as shown in figure 3-16-8.

Output Signal	P.C.Board	Test Point	Remarks
Y RF (R/P Head)	W3 (MOD/DEMOD)	TP301	also available WFM OUT for AU-665 only
C RF (R/P Head)	W3 (MOD/DEMOD)	TP701	
Head Switching	W5 (SERVO)	TP7	-------
Linear Audio CH1 (R/P Head)	W6 (AUDIO)	TP101	also available AUDIO OUT
Linear Audio CH2 (R/P Head)	W6 (AUDIO)	TP301	
Linear Audio CH1 (Monitor Head)	W6 (AUDIO)	TP271	for AU-665 only
Linear Audio CH2 (Monitor Head)	W6 (AUDIO)	TP471	
CTL Pulse	W5 (SERVO)	TP109	-------

Fig. 3-16-8 Test Points Chart

ENTRANCE LINEARITY ADJUSTMENT

1. Remove the cassette carriage unit, disconnect the P406 from the unit and connect the dummy plug (1) to P406. Put the alignment tape over the reel table and place the unit in the loading mode. Connect the scope to Y or C RF out (refer to Test Points Chart). Use TP7 on the SERVO P.C.Board (W5) to trigger the scope.
2. Playback the linearity portion of the alignment tape.
3. In order to avoid the tape damage, loosen the hex screw of P3 and P4 post so that the flange of P3 and P4 post is set free. (no limit).
4. In above condition, it possible to perform the Entrance Linearity adjustment.

Figure 3-16-7 shows tape path limit for each post.

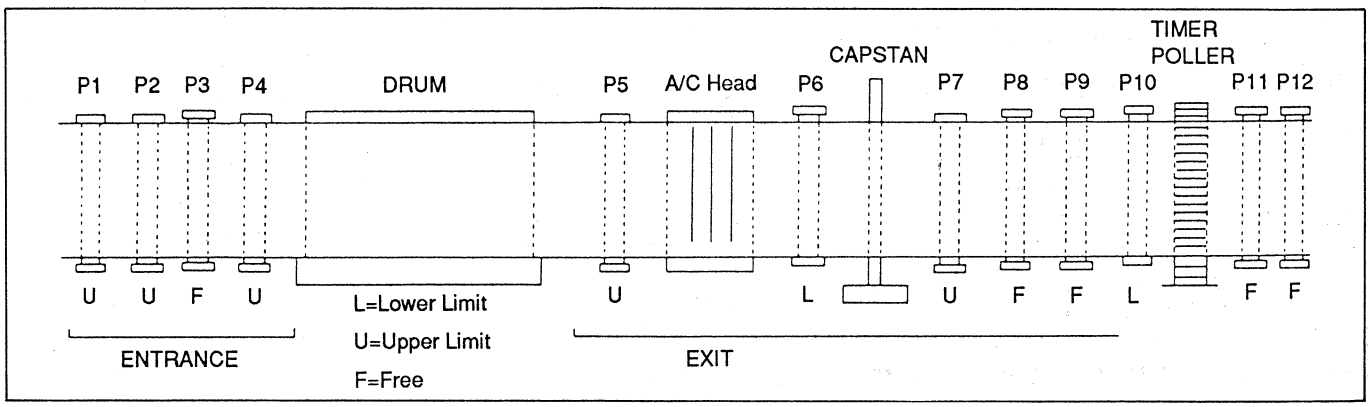

Fig. 3-16-7 Tape Path Limit

P1 POST ADJUSTMENT
LIMIT : UPPER LIMIT

1. Loosen the hex screw and adjust the upper flange so that the P1 post is set to the upper limit.
2. Place the unit in the loading mode and turn power off when the tape is half loaded as shown in figure 3-16-9.
3. Confirm that the tape is not damaged at P1 post. If tape is damaged by P1 post readjust the upper flange of P1 post.
4. Tighten the hex screw.

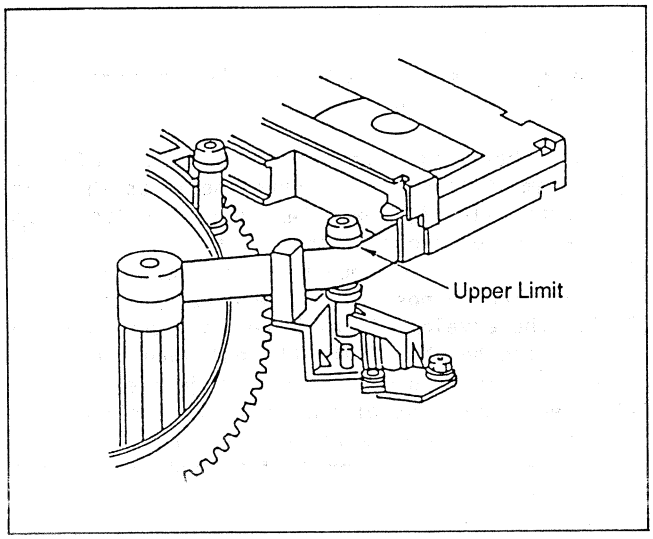

Fig. 3-16-9 Part Way of Loaded

P2 POST ADJUSTMENT
LIMIT : UPPER LIMIT

P2 Post Roller and Upper Flange Replacement

Note:
In order to avoid the tape damage, set the P3 and P4 to free (no limit) during this section.

Post Roller Replacement

1. Remove the upper flange (do not loose the hex screw) and remove the P2 post roller.
2. Install the new P2 post roller and reinstall the upper flange (do not tighten the hex screw).

Upper Flange Replacement

1. Turn the upper flange counterclockwise and remove it.
2. Remove the hex screw from the removed upper flange.
3. Reinstall the hex screw to new upper flange and set nearly original position.
4. Install the new upper flange.

P2 Post Height Adjustment

1. Playback the work cassette on which is recorded a color bar signal and observe that the P2 post upper edge has no tape damage.
2. Observe that the entrance side of Y or C RF envelope is between 85 - 115% as shown in figure 3-16-10.
3. If it is not, slightly adjust the P2 post upper flange so that the Y or C RF envelope meets specification.

Note :
Basically, RF envelope changed parallel by adjusting the Tracking VR on the front panel as shown in figure 3-16-11. If in case of B. or C, readjust the P2 post height.

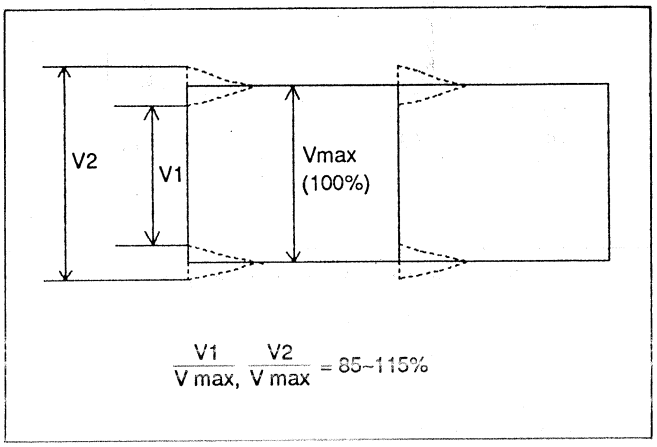

Fig. 3-16-10 Entrance Side Spec

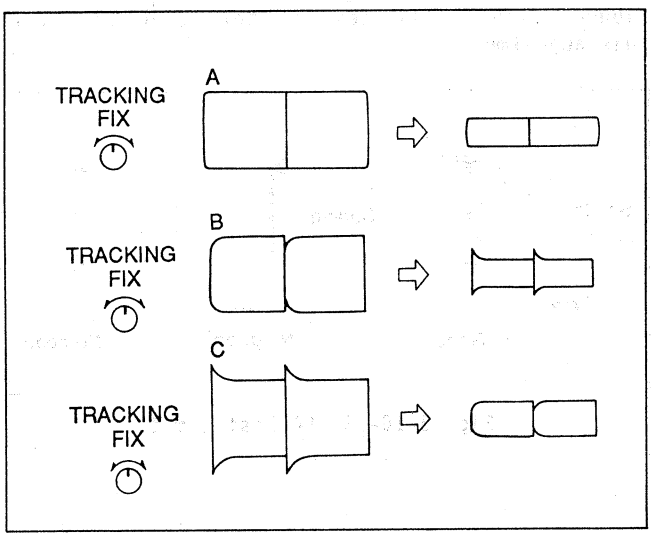

Fig. 3-16-11 Entrance Side

P3 POST ADJUSTMENT
LIMIT : FREE

1. Turn the P3 upper flange to counterclockwise so that the tape lower edge touches the P3 lower flange. (At that time, verify that the envelope entrance side is not changing.)
2. Turn the upper flange of P3 post to 3/4 clockwise (0.3mm down) as shown in figure 3-16-12.

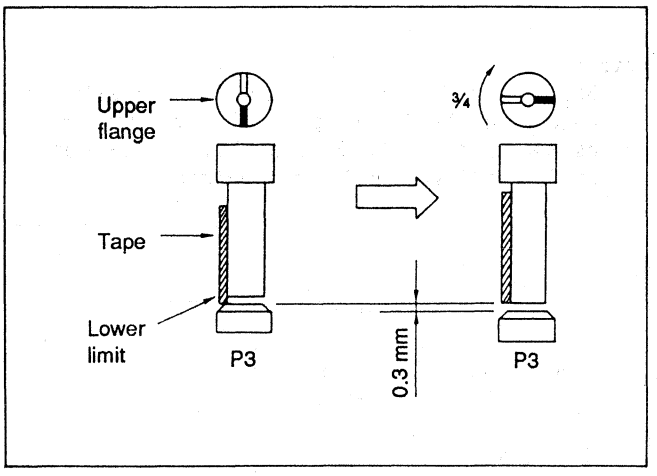

Fig. 3-16-12 P3 Post Height Adj.

P4 POST ADJUSTMENT
LIMIT : UPPER LIMIT

Reposition the P4 post so that it's upper flange just touches the top edge of the tape as shown in figure 3-16-13. Tighten the hex screw to lock this adjustment.

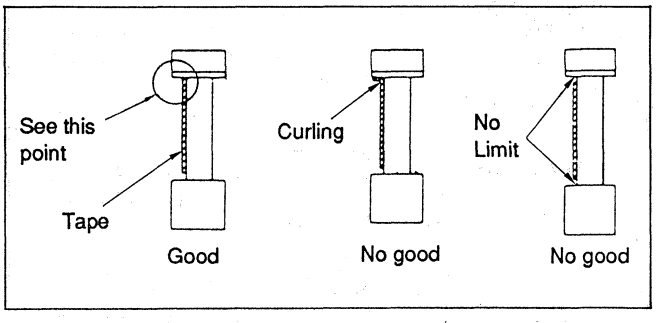

Fig. 3-16-13 P4 Post Limit

EXIT LINEARITY ADJUSTMENT

Note:
P5, P6 and A/C head affect the RF envelope and the audio level. They must be adjusted together.

P5 POST ADJUSTMENT
LIMIT : UPPER LIMIT

1. The oscilloscope setting is the same as for the entrance linearity adjustment.
2. First play back a blank or pre-recorded tape in the SHTL X1 and SHTL X-1 mode and observe the tape at the P5 post. Make sure that no tape curling occurs at the P5 post, Also the upper edge of the tape should just touch the top flange of the P5 post. Adjust the P5 post as necessary.
3. P5 post height adjustment is explained below. (Observe the Y or C RF envelope).

Note:
Lower drum rabbit guide is reference of interchange adjustment.

(1) Play back the linearity portion of the alignment tape. If the envelope is as shown in figure 3-16-14, lower the P5 post slightly so that the envelope becomes flat.
(2) If the envelope appears as in figure 3-16-15, raise the P5 post until the envelope is flat.
(3) If the envelope is as shown in figure 3-16-16 both the height of the P5 post, and the tilt of the A/C head will require adjustment.
(4) After adjustment of the P5 post, confirm that the audio level is maximum and audio azimuth is same phase. (Refer to A/C Head Adjustment Section)

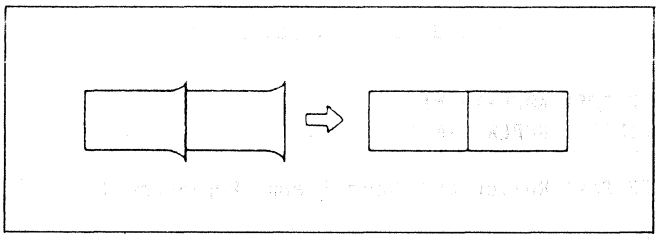

Fig. 3-16-14 Exit Side Envelope (1)

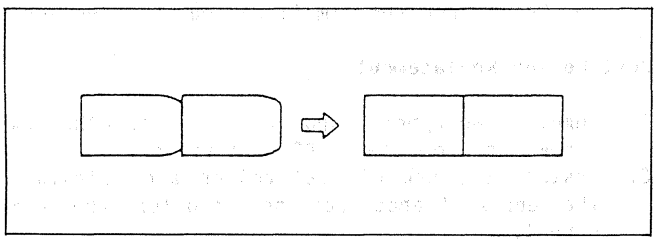

Fig. 3-16-15 Exit Side Envelope (2)

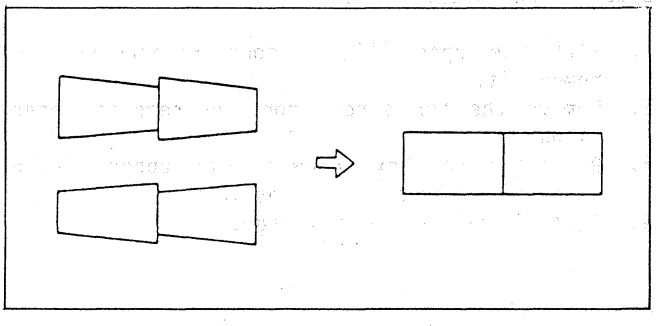

Fig. 3-16-16 Exit Side Envelope (3)

P6 POST ADJUSTMENT
LIMIT : LOWER LIMIT

Note :
When replace the P6 Post Roller, always check the audio level and azimuth.

1. Turn upper flange counterclockwise so that the lower flange touches the tape lower edge.
2. Confirm that tape curling or tape damage does not occur at the tape's lower edge in the SHTL or VAR X1 and SHTL or VAR X-1 mode as shown in figure 3-16-17.
3. If tape curling or tape damage occurs at the tape's lower edge, waving of RF envelope may occur.
4. Confirm that the audio level is maximum and azimuth is same phase. (refer to A/C Head Adjustment section)

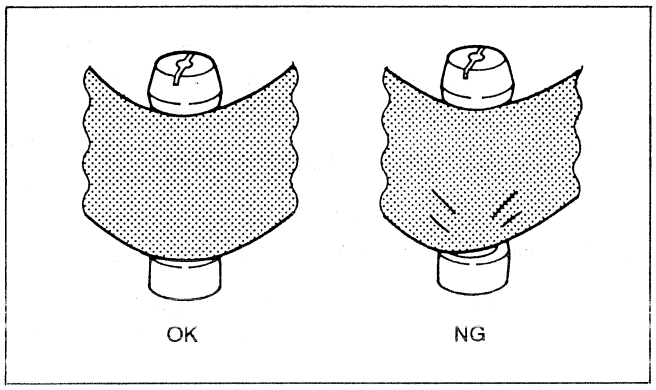

Fig. 3-16-17 Tape Path on P6 Post

P7 POST ADJUSTMENT
LIMIT : UPPER LIMIT

Note :
P7 Post is replaced with Turn Roller Arm Unit together which have already adjusted for P7 post tilt. Therefore, do not adjust the P7 post tilt when replacing.

1. Place the unit in the SHTL or VAR x 1 and SHTL or VAR x -1 mode and confirm that the tape curling or tape damaging does not occur at tape upper edge as shown in figure 3-16-18.

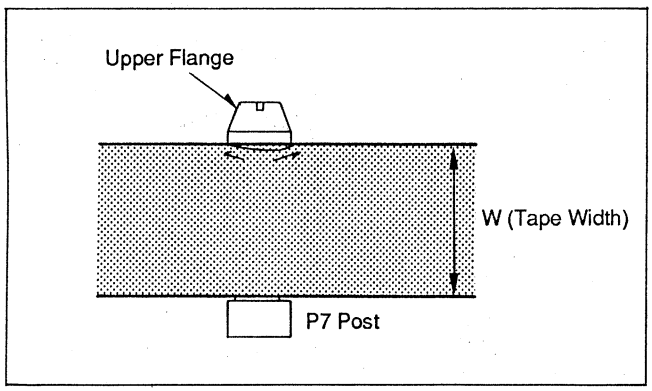

Fig. 3-16-18 P7 Tape Travel

2. If too much upper limit is applied, adjust upper flange with slightly so that the upper flange just touches the tape upper edge.
3. Confirm that the tape curling or tape damaging does not occur at P6 post in SHTL or VAR x 1 and SHTL or VAR x -1 mode.

P8 POST ADJUSTMENT
LIMIT : FREE

1. Confirm that the tape curling or tape curling does not occur at the P6 post lower flange in SHTL or VAR x 1 mode.
2. If tape curling or tape curling occur at the P6 lower flange, adjust P8 upper flange so that the P8 lower flange touches the tape lower edge in SHTL or VAR x 1 mode.

P9 POST ADJUSTMENT
LIMIT : FREE

1. Place the unit in the SHTL or VAR x 2 to SHTL or VAR x -1 mode alternately.
2. Confirm that the tape curling or tape curling does not occur at P8 or P10 flange in any SHTL or VAR mode.
3. If tape deforming or tape curling occur, adjust upper flange so that the tape curling or tape curling disappears at P8 or P10 post in any SHTL or VAR mode.

P10 POST ADJUSTMENT
LIMIT : LOWER LIMIT

Refer to IP BASE UNIT REPLACEMENT

P11 POST ADJUSTMENT
LIMIT : FREE

1. Adjust upper flange so that the tape curling or tape curling disappears in SHTL or VAR x 1 to SHTL or VAR x -1 mode and confirm that the tape on the timer roller does not fall the gutter of timer roller.

P12 POST ADJUSTMENT
LIMIT : FREE

1. Adjust upper flange so that the tape curling or tape curling disappears in SHTL x 1 to SHTL x 4 mode.
2. During loading/unloading, turn power off when the P12 post touches the tape and confirm that the tape is not damaged.
3. If the tape is damaged, readjust the P12 post upper flange.

3-17. IP BASE UNIT (with P10 Post) REPLACEMENT

3-17-1. Replacement

Removal

1. Remove the E-ring (B) and washer as shown in figure 3-17-1.
2. Remove the IP Base Unit (A). (Do not lose spring and washers.)

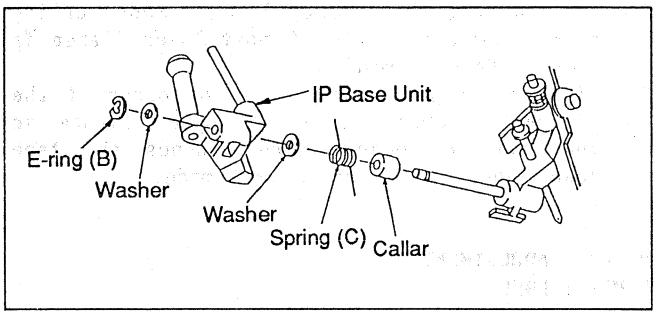

Fig. 3-17-1 IP Base Unit Removal

Installation

1. Hang on the spring (C) to the IP Base Unit and place the E-ring (B) and washer to original installation.

3-17-2. Adjustment

P10 Post Tilt Adjustment.

***Tool Required :**
Hex Wrench (2.4mm) and (1.5mm)

1. Loosen the 2 hex screw (A) and hex screw (B) as shown in figure 3-17-2.
2. Insert a cassette and place the unit in the FF mode.
3. Confirm the tape movement at the Timer Roller.
4. If the tape movement is upward, turn hex screw (B) clockwise.
5. If the tape movement is downward, turn hex screw (B) counterclockwise.
6. Confirm that the tape on the Timer Roller does not fall the groove of Timer Roller.
7. Tighten 2 hex screw (A).

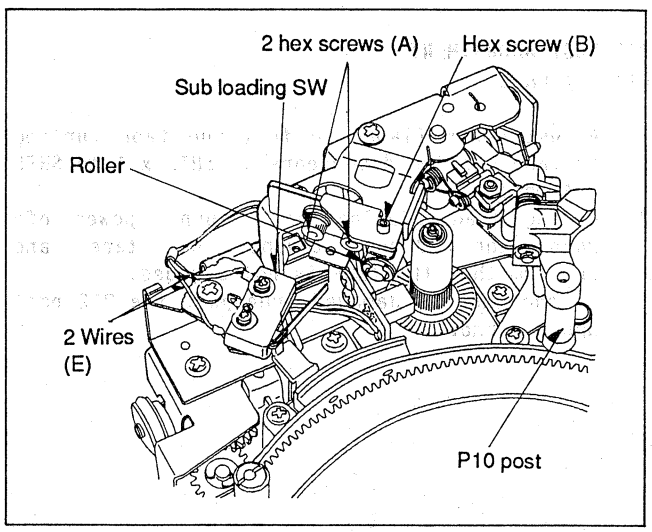

Fig. 3-17-2 Tilt Adjustment

Note :
When the hex screw (B) is turned counterclockwise, the roller does not come up.
In that case, press up the roller using finger as shown in figure 3-17-3.
When tighten 2 hex screw (A), hold the position of IP Base Unit using finger as shown in figure 3-17-3.

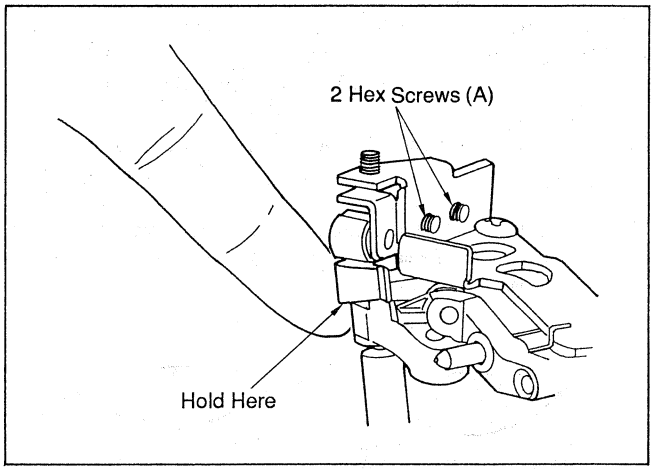

Fig. 3-17-3 IP Base Holding

P10 Post Height Adjustment

1. Adjust the upper flange with slightly so that the P10 post is set to lower limit in PLAY mode.
2. Place the unit in SHTL x 32 to SHTL x -32 alternately and confirm that the tape on the timer roller does not fall the groove of timer roller in any modes as shown in figure 3-17-4.

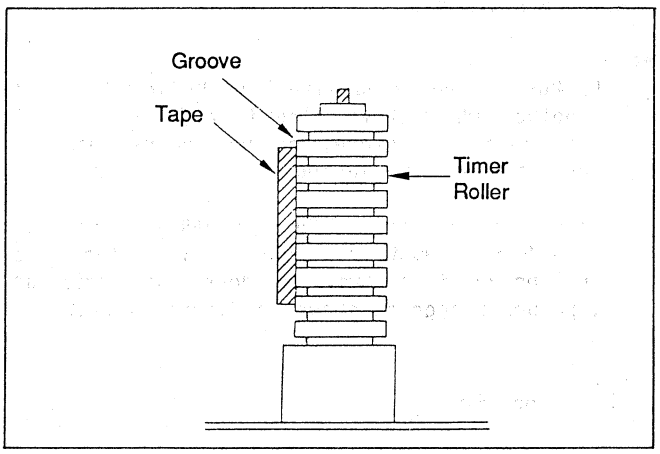

Fig. 3-17-4 Timer Roller

3-18. SUB LOADING SWITCH REPLACEMENT AND ADJUSTMENT

3-18-1. Replacement

Removal

1. Unscrew the 2 screws (C) and remove the Sub Loading Switch (Micro switch) as shown in figure 3-18-1.
2. Unsolder the 2 wires (E) on the Sub Loading Switch (Micro switch) as shown in figure 3-18-1.

Installation

1. Install the new Sub Loading Switch (Micro switch) and follow the removal steps in reverse order.

3-18-2. Adjustment

***Tool Required:**
Fine Adj. Driver (VFK0446)

1. Turn Power on. Insert a cassette and wait until tape loading completes.
2. Make sure that when the tape loading is completed, that the sub loading switch has activated. (Check that Load speed increases after switch closes).
3. If the switch does not active, loosen the screw (F), insert the Fine Adj. Driver into hole (D), and adjust the position of the switch as needed. (figure 3-18-1).

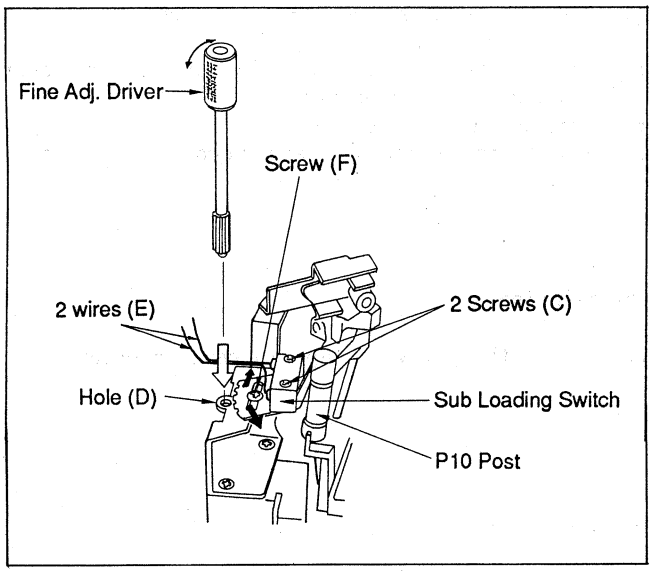

Fig. 3-18-1 Sub Loading Switch

3-19. BRAKE UNIT AND BRAKE SOLENOID REPLACEMENT

Replacement

1. Remove the MECH. INTERFACE CIRCUIT P.C.Board and Reel Base Assembly by same procedure of Reel Stand Unit replacement.
2. Remove the 4 screws (A) and (B) and remove Brake Solenoid.

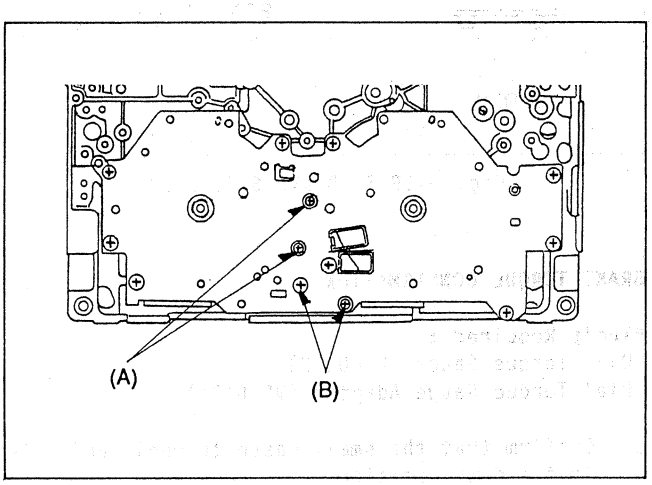

Fig. 3-19-1 Reel Base Assembly

3. Remove the 2 E-Rings (C) and (D) and remove the Brake unit.

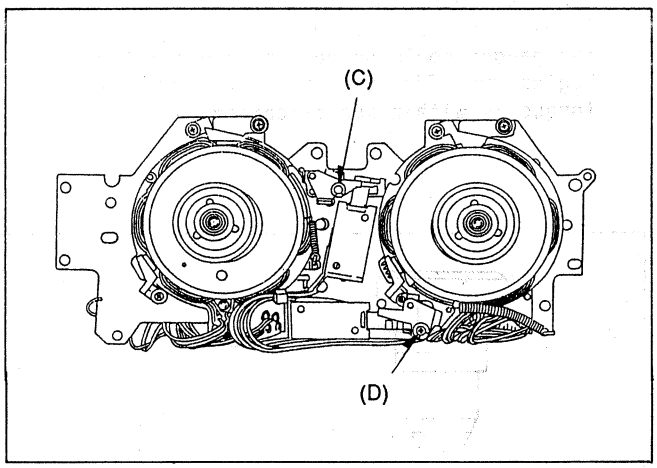

Fig. 3-19-2 Brake Unit

Installation

1. Install the new Brake unit and new Solenoid and follow the previous steps in reverse order.

Adjustment

1. Adjust Brake Solenoid position so that the space A and B are same when solenoid plunger is energized.
2. After adjustment, tighten and fix the 2 screws.

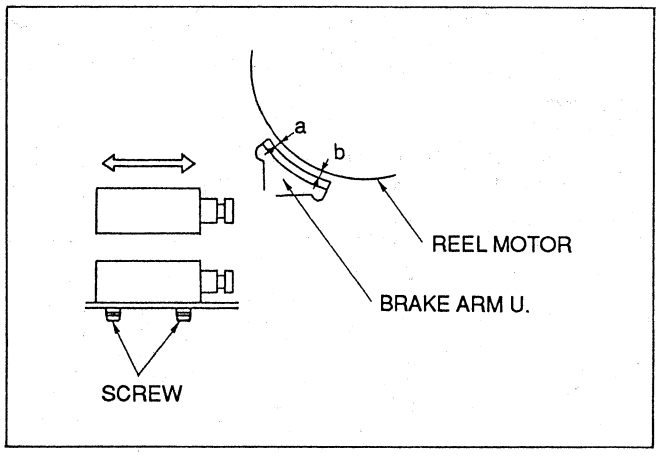

Fig. 3-19-3 Brake Solenoid

BRAKE TORQUE CONFIRMATION

***Tools Required :**
Dial Torque Gauge (VFK0133)
Dial Torque Gauge Adaptor (VFK0134)

1. Confirm that the small cassette reel table is in the down position.
2. Attach the dial torque adaptor to the dial torque gauge and place the dial torque gauge over the reel table.
4. Float the gauge slightly above the reel table as shown in figure 3-19-4 and turn it in the direction as shown in figure 3-19-5. The gauge should be read at the point where it begins to slip and confirm that the brake torque is within specification.

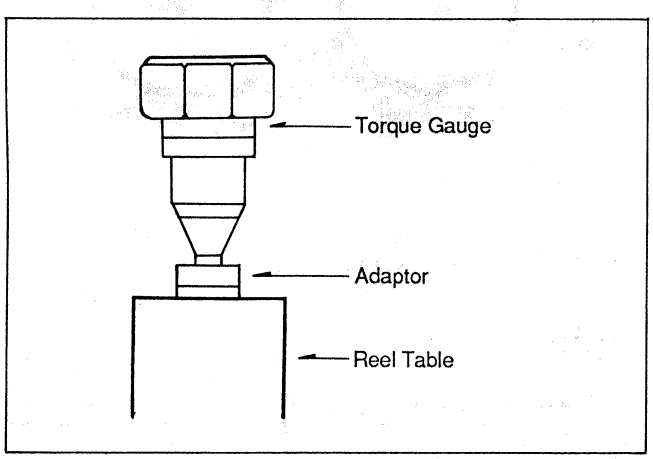

Fig. 3-19-4 Dial Torque Gauge

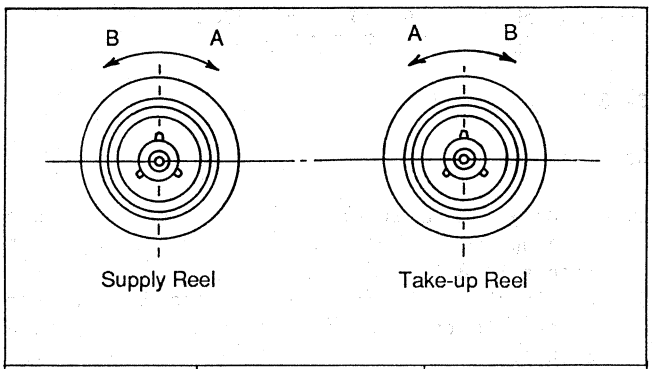

	A (gf•cm)	B (gf•cm)
Take-up	350~600	120~250
Supply	350~600	120~250

Fig. 3-19-5 Torque Confirmation

3-20. LOADING MOTOR REPLACEMENT

3-20-1. Replacement

Removal
1. Remove the bottom plate.
2. Disconnect the connector P61027 on the Mech Interface P.C.B.
3. Remove the 3 screws (A) and remove the turn roller lifter unit as shown in figure 3-20-1.
4. Remove the 3 screws (B) and remove the sub loading switch unit.
5. Remove the 4 screws (C), motor holder cover (D) and the loading motor unit (E).
6. Remove the loading belt (F).
7. Remove the screw (I) and remove the loading motor.

Installation

1. Follow the removal steps in reverse order.

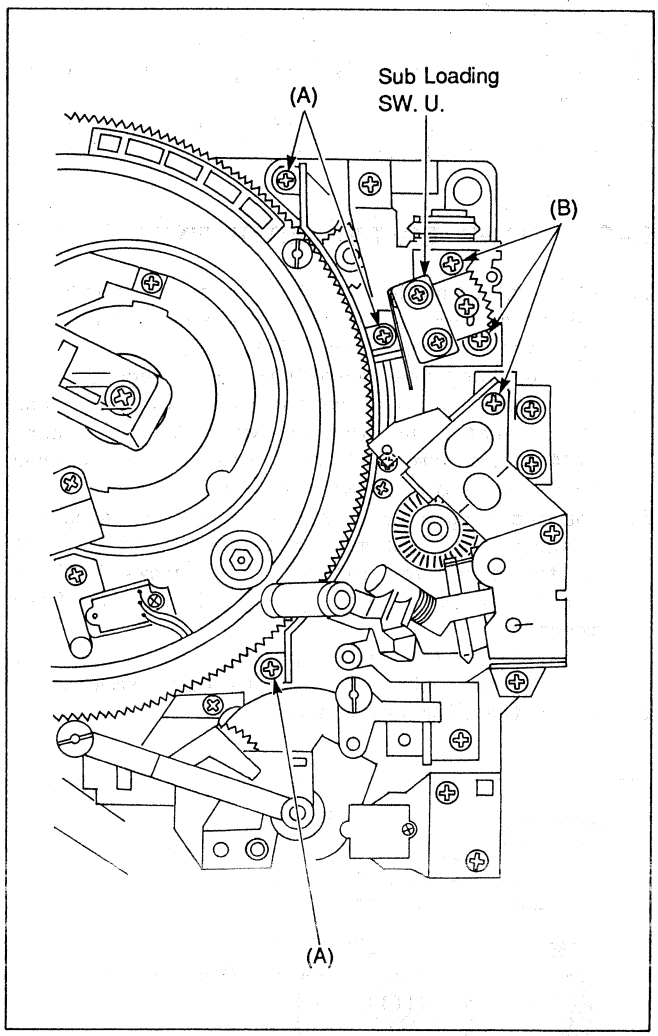

Fig. 3-20-1 Loading Motor Unit

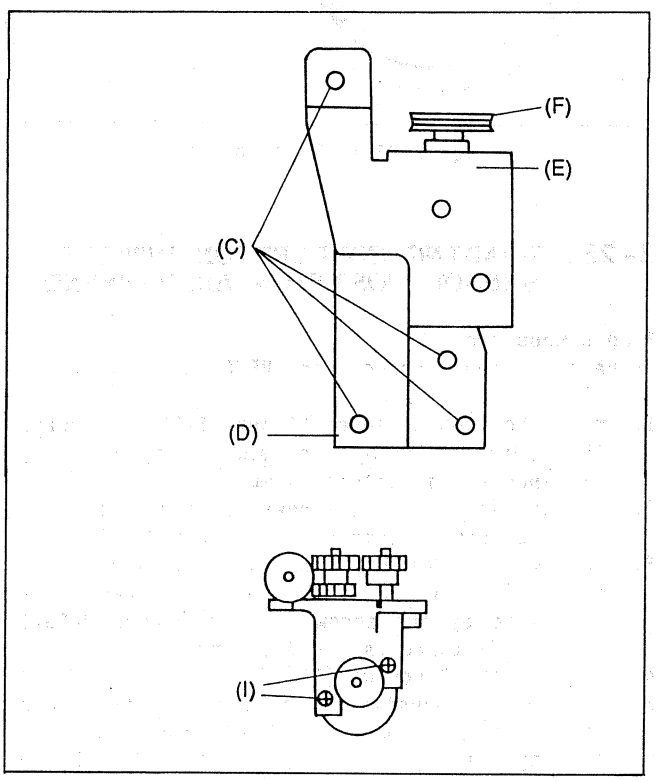

Fig. 3-20-2 Loading Motor

3-21. SMALL CASSETTE MOTOR REPLACEMENT AND ADJUSTMENT

3-21-1 Replacement

1. Unscrew the 5 screws (A) and remove the small cassette reel base unit as shown figure 3-21-1.
2. Hang off the 2 spring (B) and remove the small cassette reel base unit as shown in figure 3-21-1.
3. Lift up the warm wheel (do not remove) and unscrew 2 screws (C) and then remove the small cassette motor as shown in figure 3-21-2.

3-21-2 Installation

1. Follow the previous steps in reverse order.

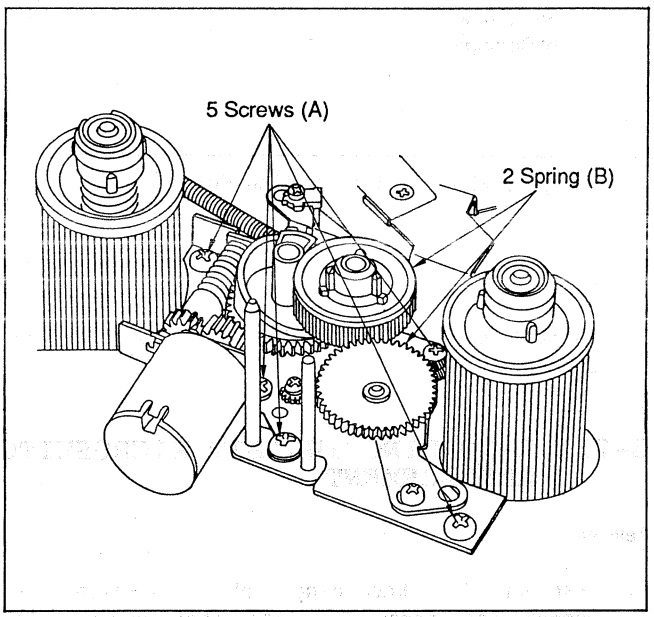

Fig. 3-21-1 S-Reel Base Removal

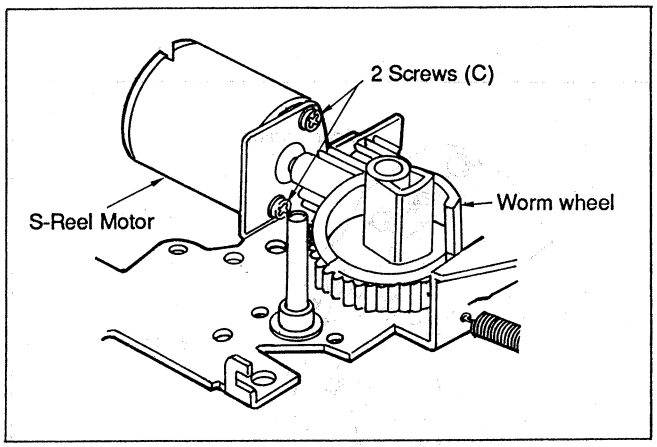

Fig. 3-21-2 Motor Removal

3-22. FRONT LOADING MOTOR REPLACEMENT

Removal

1. Remove the front loading unit.
2. Unsolder the 2 leads on the front loading motor.
3. Remove the front loading belt.
4. Remove the 2 screws (A) and remove the front loading motor.

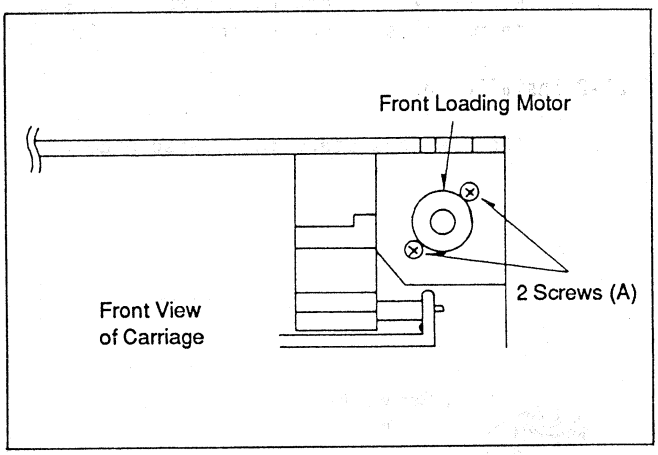

Fig. 3-22-1 Front Loading Motor Removal

Installation

1. Install new front loading Motor in reverse order.

3-23. RECORDING INHIBIT MICROSWITCH REPLACEMENT

Removal

1. Unsolder the Recording Inhibit switch and remove the screw (A) and then remove the Recording Inhibit switch as shown in figure 3-23-1.

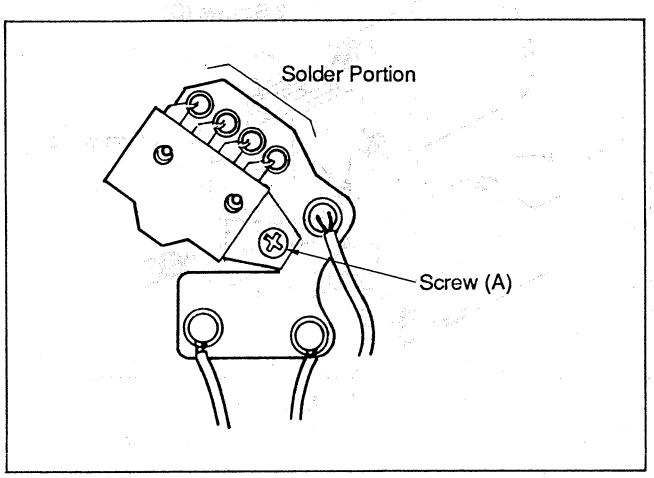

Fig. 3-23-1 Rec Inhibit SW Removal

Installation

1. Install the new Recording Inhibit SW in reverse order.
2. Confirm that both sizes of cassette (large and small) are detected properly.

3-24. RING ROLLER ADJUSTMENT

1. With the power switch off (without a cassette), press the ring drive gear down. (To free the loading ring.) Turn the loading ring counterclockwise approximately 20 degree.
2. Move the loading ring back and forth by hand as indicated by the arrows X-X' in figure 3-24-1 Confirm that the loading ring's free movement is approximately 0.3mm.
3. Loading ring play is adjusted by loosening the 2 screws (A) and moving the ring roller unit in the direction indicated by arrows Y-Y' in figure 3-24-1. Adjust for 0.3mm of free movement.
4. Tighten the 2 screws (A).
5. Confirm that the loading ring turns smoothly.
6. Reset the ring drive gear.

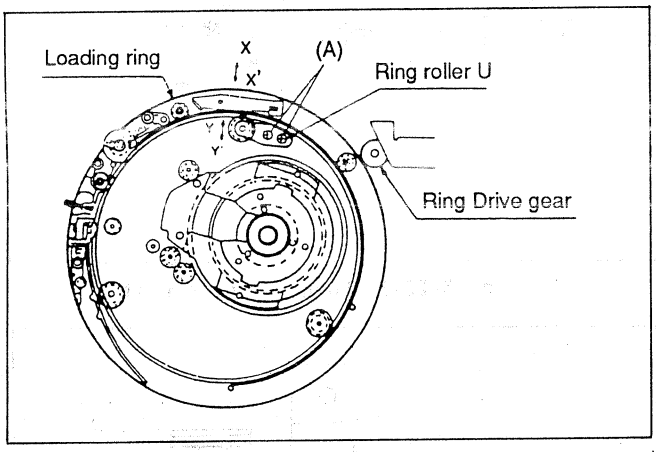

Fig. 3-24-1 Ring Roller

3-25. LOADING COMPLETION DETECT SENSOR POSITION ADJUSTMENT

***Tools Required:**
Fine Adjustment Screwdriver (VFK0446)

1. Move the stopper lever (figure 3-25-1) toward the photo sensor by hand and verify that the distance (A) is within 0-1mm.
2. If not, loosen the 2 screws (C) and insert the fine adjustment screwdriver into hole (D).
3. Adjust the loading completion detect photo assembly by moving it forward, or backward as indicated by the arrows X-Y in figure 3-25-1 so that distance (A) is 0 to 1mm.
4. Tighten the 2 screws (C).
5. After this adjustment, confirm that the photo sensor output level is more then 4.5V at loading completion and less than 0.5 volt at

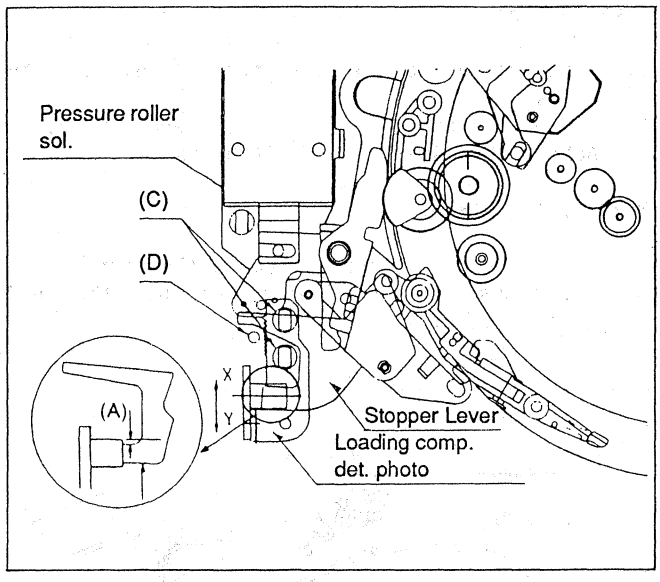

Fig. 3-25-1 Loading Completion Sensor

3-26. UNLOADING COMPLETION DETECT SENSOR POSITION ADJUSTMENT

***Tools Required:**
Fine Adjustment Screwdriver (VFK0446)

1. With the power off (without a cassette), measure the clearance (A) as in indicated in figure 3-26-1. This distance should be from 1mm to 2mm.
2. If not, loosen the 2 screws (C) and insert the fine adjustment screwdriver into hole (D). (figure 3-26-1)
3. Adjust the unloading completion detect photo sensor so that the clearance (A) is from 1mm to 2mm.
4. Tighten the 2 screws (C).

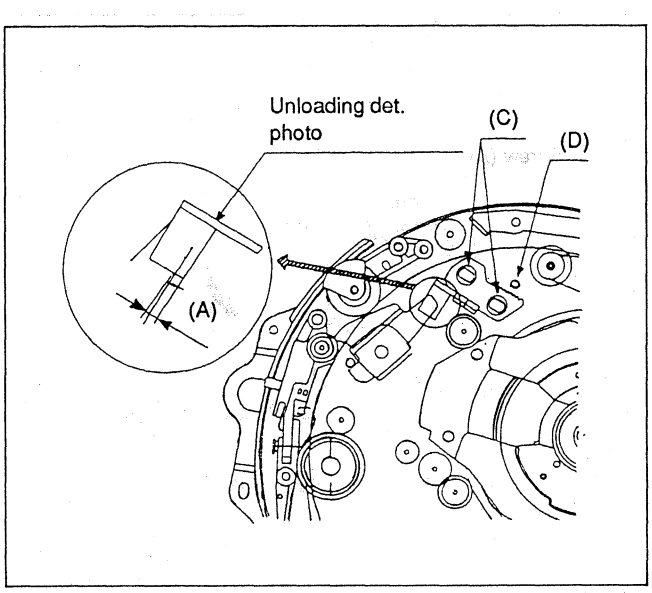

Fig. 3-26-1 Unloading Completion Sensor

3-27. POSITION OF P1 POST DRIVE ROD

***Tools Required:**
Eccentric Screwdriver (VFK0358)

1. Remove the front loading unit from the unit, reconnect the connector to the removed front loading unit. Insert a work cassette to the removed carriage and press the EJECT button.
2. Measure the distance (C) as shown in figure 3-27-1 and verify that it is within 0.5mm (+/- 0.1mm).
3. If not, loosen the two screws (A) (figure 3-27-1) and insert the eccentric screwdriver into hole (B). Adjust the P1 post drive rod length so that distance (C) becomes 0.5mm (+/- 0.1mm). Tighten the 2 screws (A) and replace the small cassette holder.

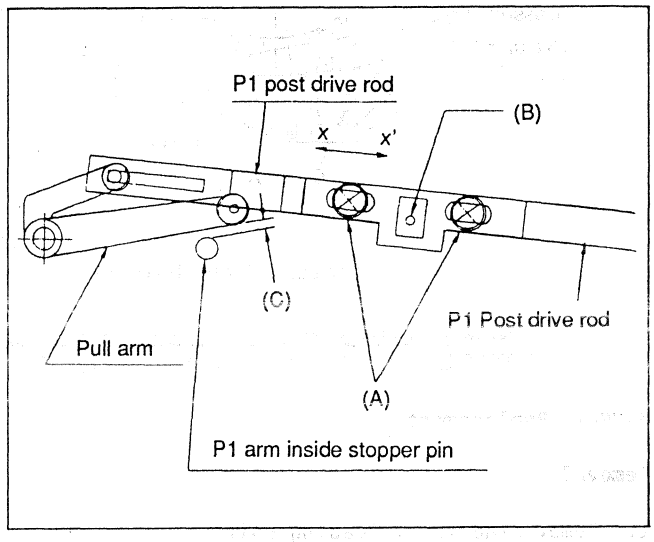

Fig. 3-27-1 P1 Post Drive Rod

3-28. CASSETTE UP AND DOWN SWITCHES ADJUSTMENT

1. Remove the front loading unit without removing the connector.
2. Insert a cassette into the front loading unit. When front loading is completed confirm that there is no clearance at the (E) position as shown in figure 3-28-1.
3. If it is not, loosen screw (A) and insert the fine adjustment screwdriver into hole (B).
4. Adjust the position of the switch (A) with the fine adjustment screwdriver so that the loading complete switch is on.
5. Tighten the screw (A) and reconfirm that there is no clearance at the (E) position.
6. Place the unit in the eject mode.
7. Slightly loosen the screw (C) and insert the fine adjustment screwdriver into hole (D).
8. Adjust the position of the switch (B), with the fine adjustment screwdriver, so that the Cassette Up and Down switch is on.

9. Then confirm that the drive pulley rotates 1/4-1/2 turn, smoothly by hand and there is no play on the mirror holder.
10. Tighten the screw (C).

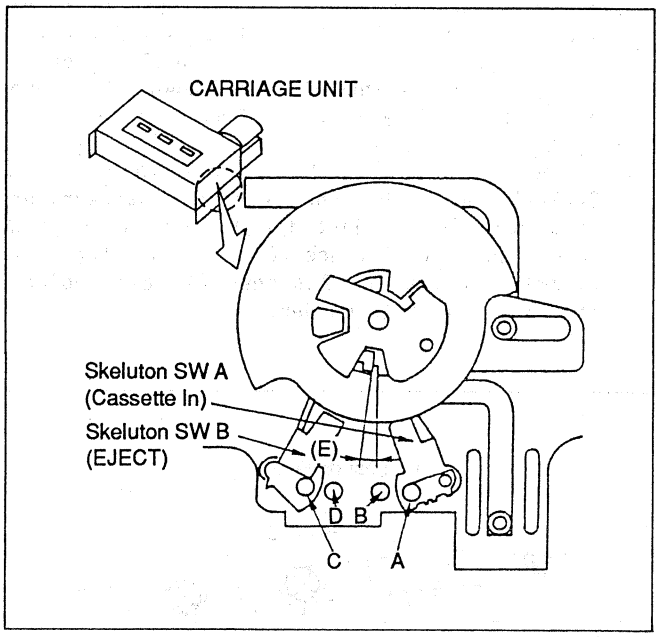

Fig. 3-28-1 Cassette Up and Down SW

3-29. FRONT LOADING U. LEAF SWITCH REPLACEMENT AND ADJUSTMENT

3-29-1. Replacement

Removal

1. Remove the front loading unit.
2. Turn the front loading unit as shown in figure 3-29-1.
3. Remove the screw (A).
4. Unsolder the wire (B) of leaf switch and remove the leaf switch.

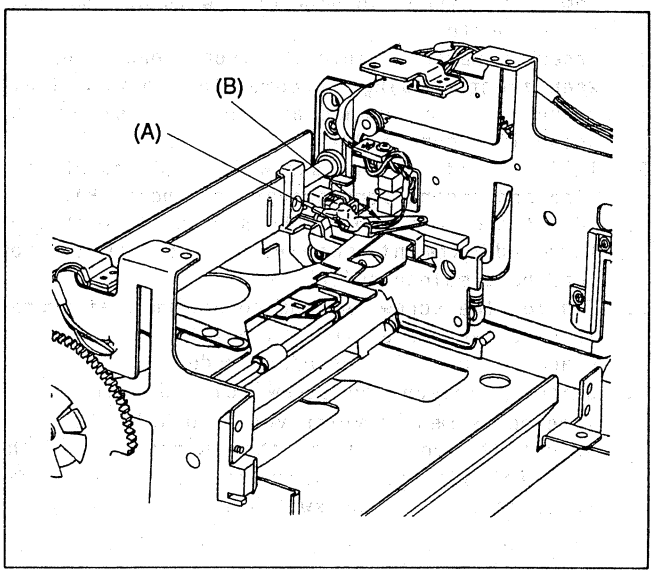

Fig. 3-29-1 Leaf SW

Installation

1. Install the new leaf switch and solder the wires.
2. Follow the previous steps in reverse order.
3. Adhere the wire (B) when it has loose.

3-29-2. Adjustment

1. If it is not, slightly loosen the screw (A) and adjust the leaf switch so that the leaf switch is on.

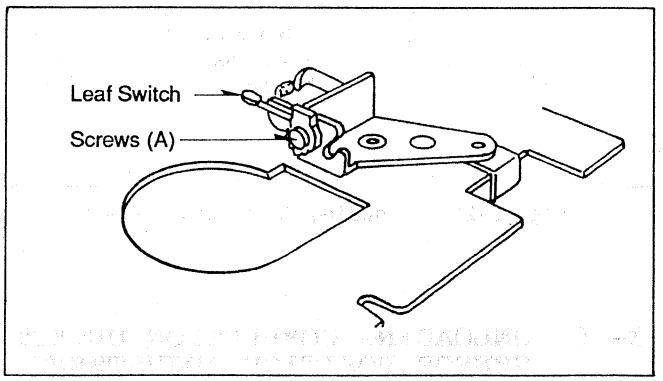

Fig. 3-29-2 Small Cassette Detect SW

3-30. SMALL CASSETTE LEAF SWITCH REPLACEMENT AND ADJUSTMENT

***Tool Required :**
Fine Adjustment Screwdriver

3-30-1. Replacement

1. Unscrew the 2 screws (A) and remove the Leaf switch as shown in figure 3-30-1.
2. Unsolder the wires and install the new Leaf switch.

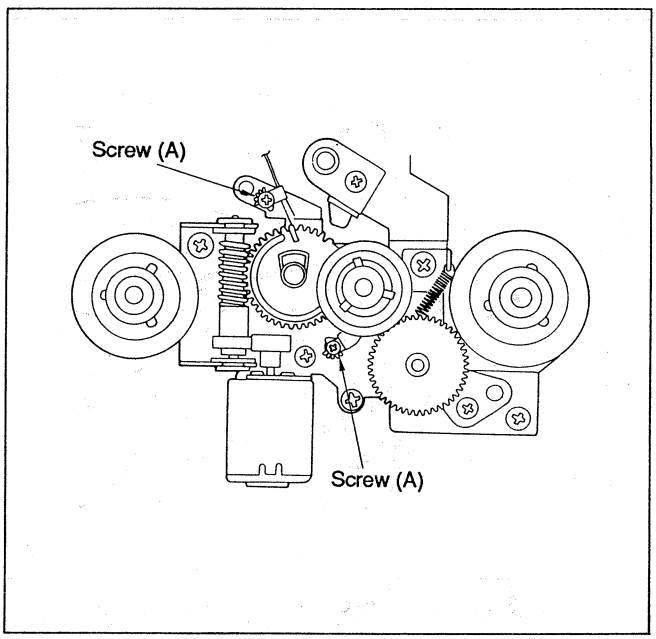

Fig. 3-30-1 Leaf Switch

3-30-2. Adjustment

1. Set the small cassette reel to down position with rotating the worm gear manually.
2. Insert the fine adjustment screwdriver into hole (B) and adjust the Leaf switch position as shown in figure 3-30-2.
3. Set the small cassette reel to the up position (engaged T-Reel Stand Unit) while rotating the worm gear manually.
4. Insert the fine adjustment screwdriver into hole (C) and adjust the Leaf switch position as same as step 2.
5. Confirm that the Leaf switch is ON when insert the both size cassette (small and large) is inserted to the cassette carriage.

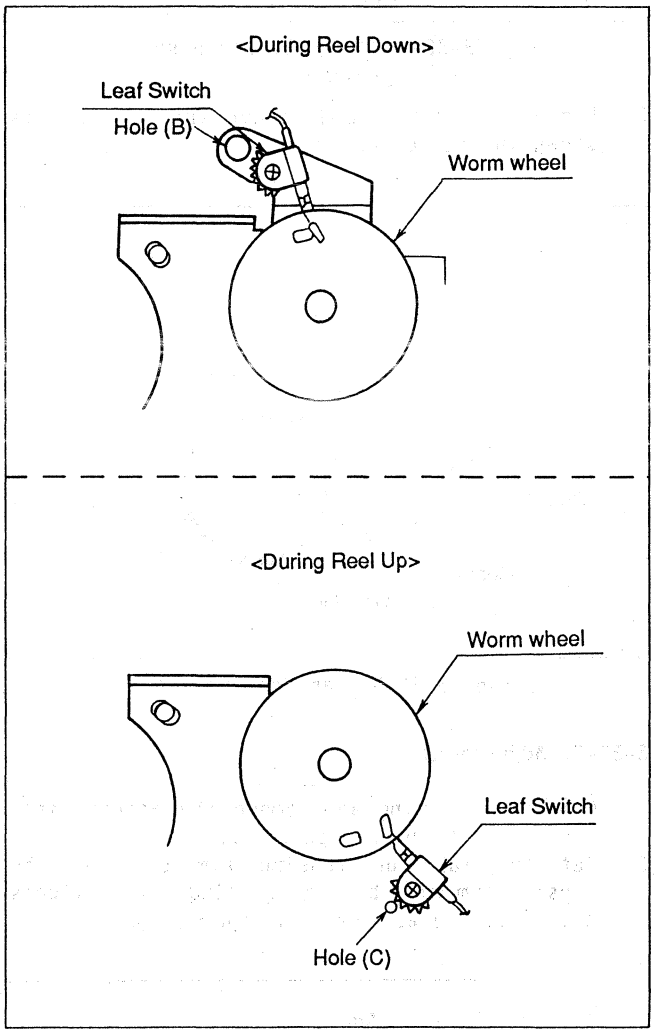

Fig. 3-30-2 Leaf SW Position Adjustment

3-31. TURN ROLLER ARM UNIT REPLACEMENT

3-31-1. Replacement

1. In order to ease replacement, unscrew 2 screws and remove the Pinch Roller Guide Unit as shown in figure 3-31-1.
2. Push the ring drive gear and turn loading ring counterclockwise manually so that the Turn Roller Arm Unit reaches toward.
3. Remove the E-ring (A) and washer (B) as shown in figure 3-31-2.

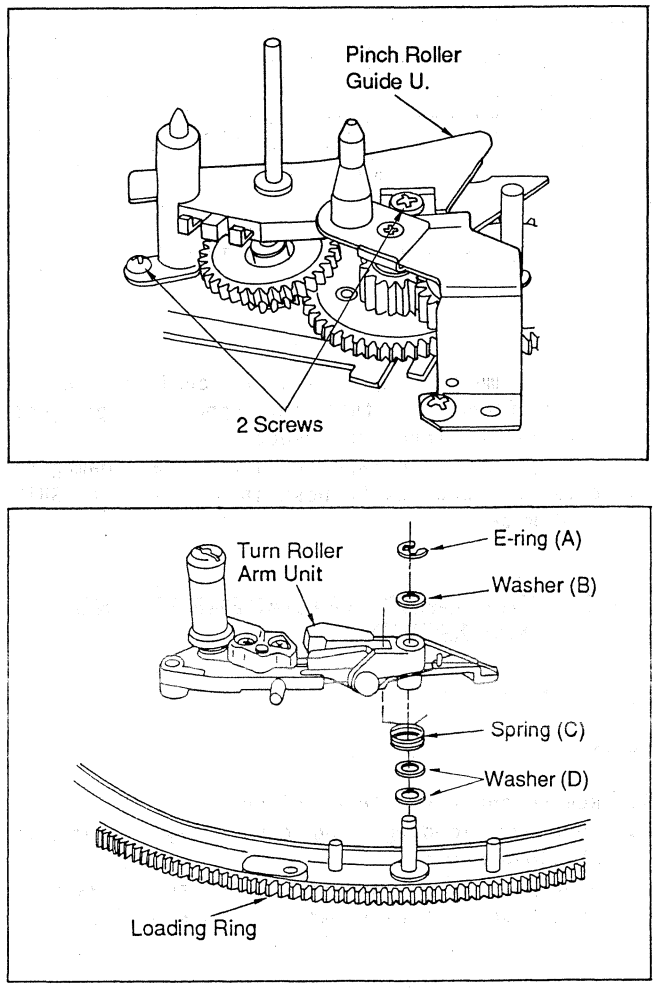

Fig. 3-31-2 Turn Roller Arm Removal

4. Hang the spring (C) off post on the loading ring and remove the Turn Roller Arm Unit as shown in figure 3-31-2.
5. Remove the 2 washers (D) as shwon in figure 3-31-2.

3-31-2. Installation

1. Follow the previous steps in reverse order.

3-31-3. Adjustment

Note :
Do not adjust the P7 post tilt because supplied service parts have already adjusted.

1. Place the unit in the SHTL x 1 and SHTL x -1 mode and confirm that the tape curling or tape damaging does not occur at tape upper edge as shown in figure 3-31-3.

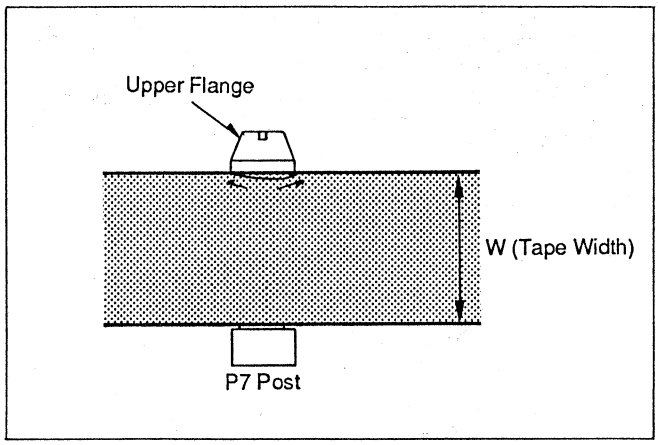

Fig. 3-31-3 P7 Tape Travel

2. If too much upper limit is applied, adjust upper flange so that the upper flange just touches the tape upper edge.
3. Confirm that the tape curling or tape damaging does not occur at P6 post in SHTL x 1 and SHTL x -1 mode.

3-32. CAM GEAR REPLACEMENT AND ADJUSTMENT

3-32-1. Replacement

Removal

1. Remove the cassette carriage.
2. Turn the loading ring completely loading to the load position.
3. Unscrew 5 screws and remove the small cassette reel base unit as shown in figure 3-32-1.

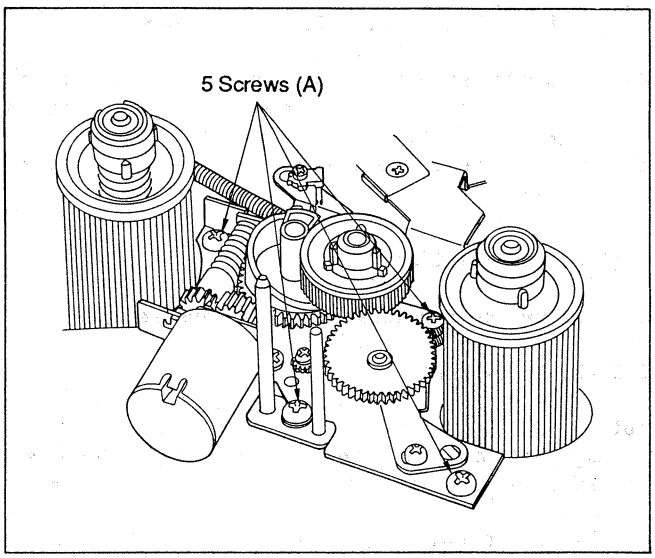

Fig. 3-32-1 Small Cassette Reel Base U.

4. Unscrew 3 screws and remove the photo sensor unit as shown in figure 3-32-2.

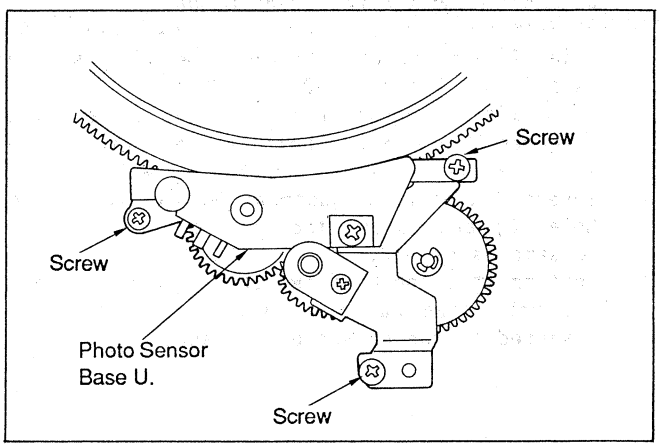

Fig. 3-32-2 Photo Sensor Base U.

5. Remove the E-ring and remove the cam gear as shown in figure 3-32-3.

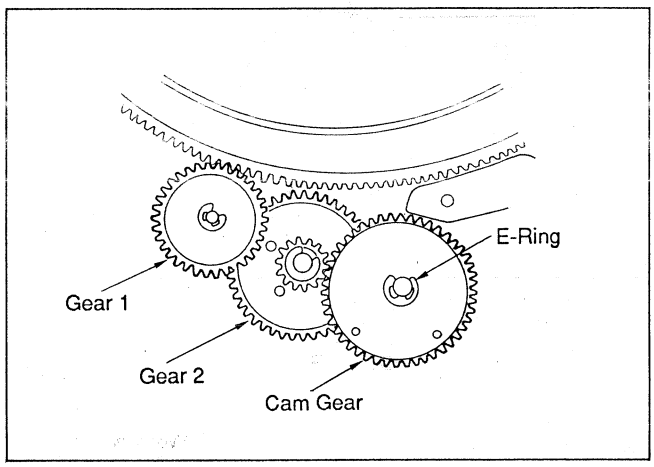

Fig. 3-32-3 Cam Gear Removal

3-32-2. Adjustment

1. Remove the E-ring and remove the intermediate gear 1 as shown in figure 3-32-3.
2. Set the take up tension arm so that the tension arm will be free (spring activity does not function) as shown in figure 3-32-4.

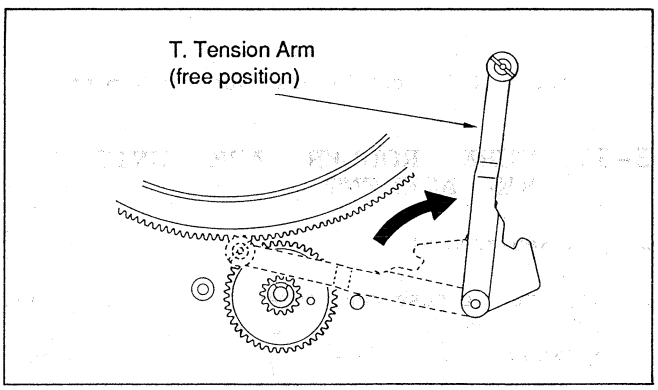

Fig. 3-32-4 T-Tension Arm Setting

3. Set the hole of intermediate gear 2 to the line between the shaft A and B as shown in figure 3-32-5.

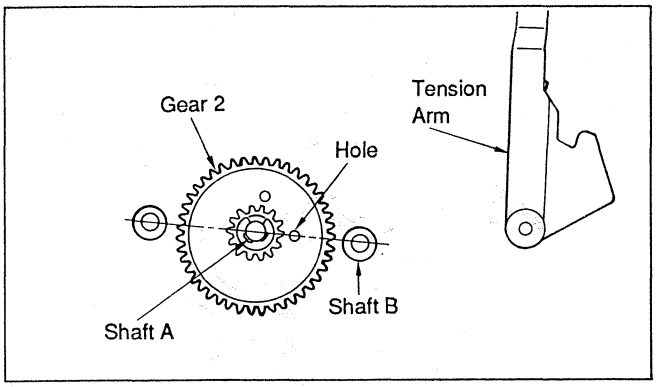

Fig. 3-32-5 Intermediate Gear 2 Setting

4. Install the new cam gear to the shaft B.
5. Set the hole of cam gear so that the hole of cam gear is matched with hole of intermediate gear 2 as shown in figure 3-32-6.
6. Turn the cam gear clockwise so that the tension arm pin is fits into the groove of cam gear as shown in figure 3-32-6.

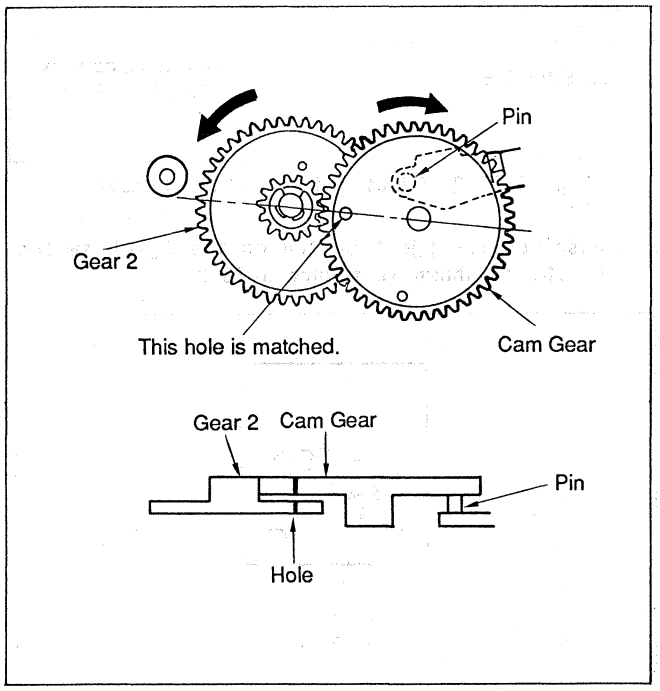

Fig. 3-32-6 Cam Gear Phase Adj. 1

7. Move back the take up tension arm and set the each hole of gear to the center on the line between shaft A and B (moving each gear) as shown in figure 3-32-7.
8. Turn the loading ring completely unloading position and install the intermediate gear 1.

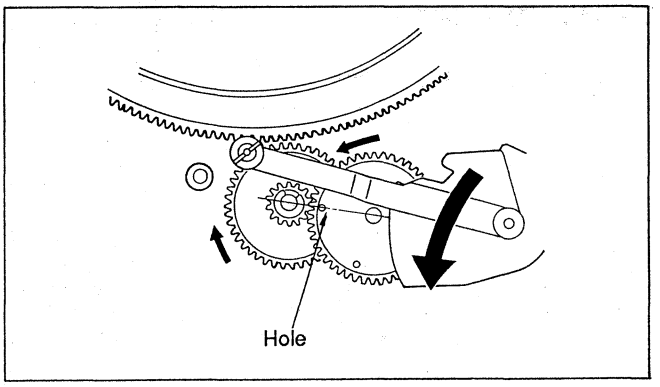

Fig. 3-32-7 Cam Gear Phase Adj. 2

9. Install the small cassette reel base unit and photo sensor base unit in reverse order.

3-33. CARRIAGE ILLUMINATION LAMP REPLACEMENT

Removal

1. Unscrew the 4 screws (A) and remove the carriage fix plate (C) as shown in figure 3-33-1.
2. Unscrew the 2 screws (B) and remove the lamp cover as shown in figure 3-33-1.
3. Unsolder lamp lead and remove the Carriage Lamp.

Installation

1. Follow the previous steps in reverse order.

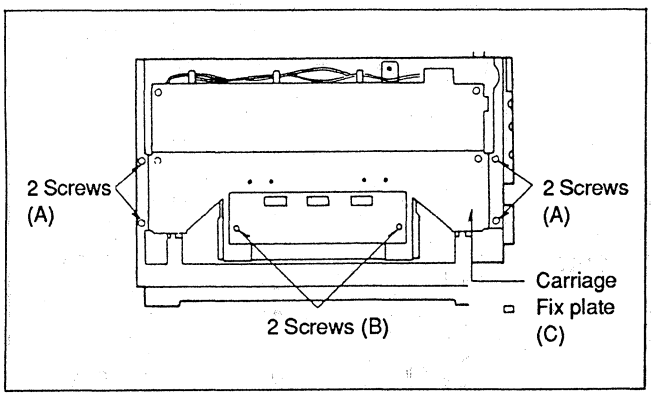

Fig. 3-33-1 Carriage Illumination Lamp

3-34. FAN MOTOR REPLACEMENT

1. Remove the top panel and remove the 2 screws (A).

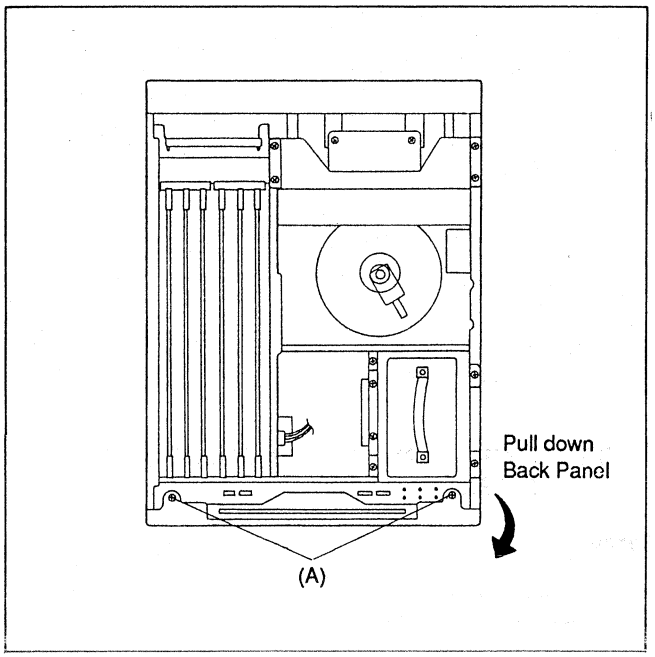

Fig. 3-34-1 Back Panel

2. Pull down the back panel and disconnect CN205 and CN206 on Audio I/O P.C.Board.
3. Remove the 8 screws (B) and (C) and remove the Fan Motors.

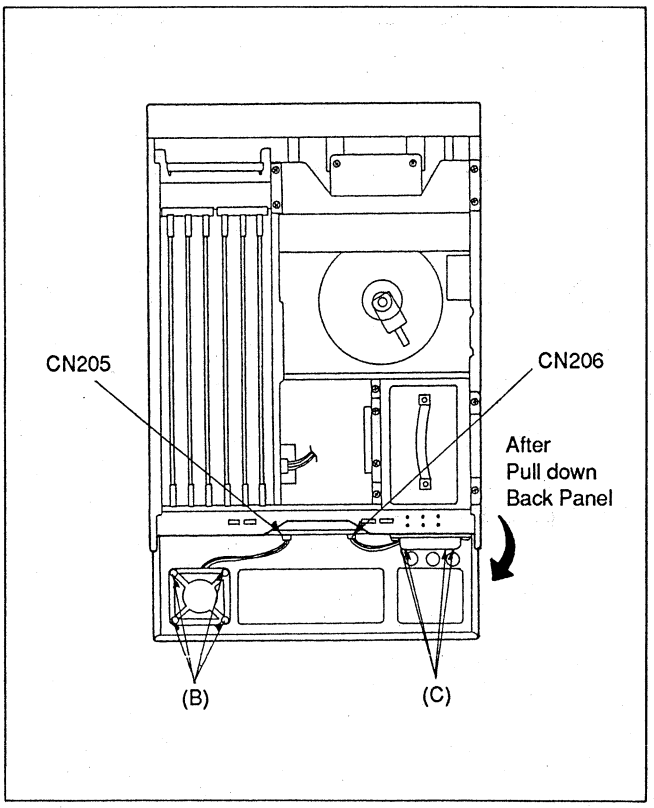

Fig. 3-34-2 Fan Motors

3-35. EJECT SW REPLACEMENT

1. Loosen 2 silver screws and remove the 4 screws (A) and then remove the front panel as shown in figure 3-35-1.

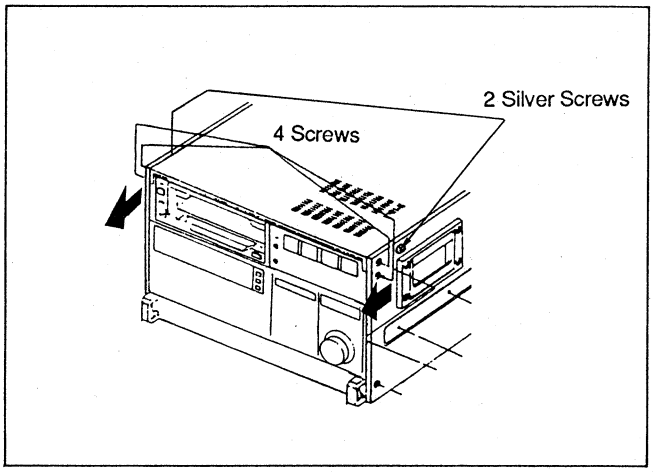

Fig. 3-35-1 Front Panel Removal

2. Remove the screw (B) on the Front Panel as shown in figure 3-35-2.

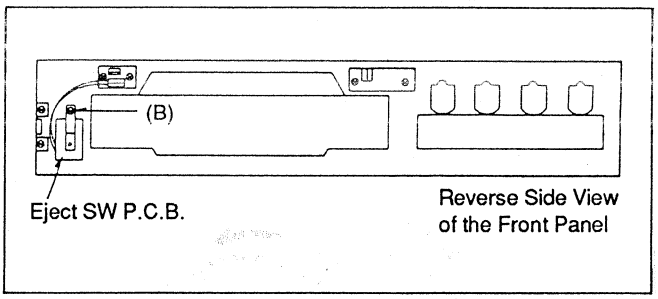

Fig. 3-35-2 Eject switch P.C.B. Removal

3. Unsolder the Eject switch on the Eject switch P.C.B. as shown in figure 3-35-3.

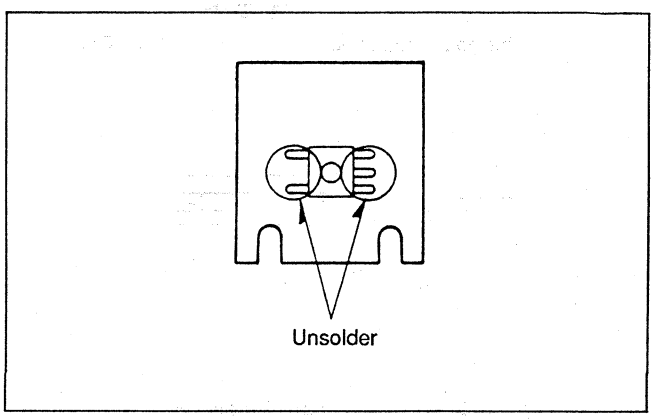

Fig. 3-35-3 Eject Switch

Note :
When replacing the eject switch, be sure not to lose the spring.

3-36. POWER SWITCH REPLACEMENT

Removal

1. Loosen 2 silver screws and remove the 4 screws (A) and then remove the front panel as shown in figure 3-36-1.
2. Remove the 2 screws (B) and unsolder the wires of power switch as shown in figure 3-36-1.
3. Remove the Power Switch.

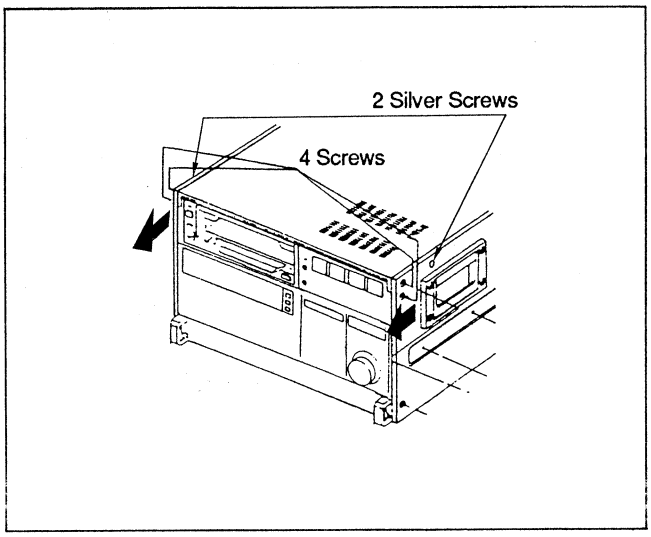

Fig. 3-36-1 Front Panel Removal

Installation

1. Follow the previous steps in reverse order.

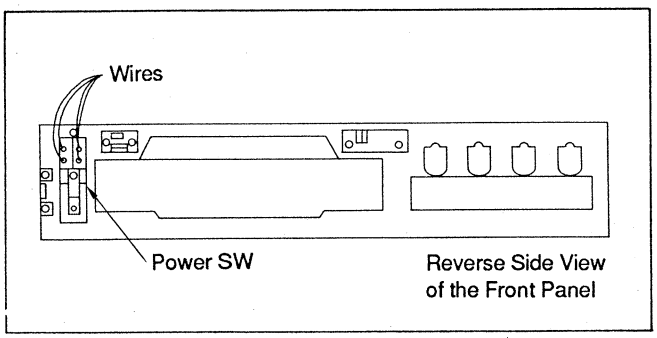

Fig. 3-36-2 Power Switch Removal

ELECTRICAL ADJUSTMENTS

This section covers the electrical adjustment.

Note:

1. Some preference switches are located on printed circuit boards within the unit. Be sure to turn off the power prior to opening the unit, before changing the position of any switch, and especially before removing or reinserting any circuit board.
2. Pre-heat the unit over two hours before the electrical adjustment.
3. After servicing and adjustment, see to it that all parts such as insulation barriers, insulators, shields, jumper wires, and witing harnesses are properly re-installed as originally found.

Panasonic

CONTENTS

SAFETY PRECAUTIONS 4-1

1. INFORMATION FOR ELECTRICAL ADJUSTMENT 4-2

1-1. MAIN ADJUSTMENT FLOWCHART 4-2
1-2. RECOMMENDED TEST AND SERVICE EQUIPMENT 4-3
1-3. SIGNAL GENERATOR CONNECTION METHODE & INPUT SELECT SWITCH SETTING (FOR ELECTRICAL ADJUSTMENT) 4-4

2. POWER SUPPLY UNIT

2-1. +5V ADJUSTMENT 4-5
2-2. +7.5V ADJUSTMENT 4-5

3. SYSTEM CONTROL (B1) BOARD

3-1. SUPER IMPOSE HORIZONTAL POSITION ADJUSTMENT 4-6

4. SERVO (W5) BOARD
SERVO SECTION (W5) FLOWCHART FOR AU-65 4-7
SERVO SECTION (W5) FLOWCHART FOR AU-63 4-8
SERVO SECTION (W5) FLOWCHART FOR AU-62 4-9

4-1. MACHINE CONDITION SETTING (1) 4-10
4-2. NEUTRAL VOLTAGE ADJUSTMENT 4-10
4-3. SUBLOADING VOLTAGE ADJUSTMENT 4-10
4-4. SUPPLY & TAKE-UP SENSOR VOLTAGE ADJUSTMENT 4-11
4-5. SUPPLY (FWD.) TENSION ADJUSTMENT 4-12
4-6. TAKE-UP (FWD.) TENSION ADJUSTMENT 4-13
4-7. SUPPLY (REV.) TENSION ADJUSTMENT 4-14
4-8. TAKE-UP (REV.) TENSION ADJUSTMENT 4-14
4-9. STARTING TORQUE ADJUSTMENT 4-15
4-10. SUB-LOADING TENSION ADJUSTMENT 4-15
4-11. LOADING & UNLOADING CONFIRMATION 4-16
4-12. FF TENSION ADJUSTMENT 4-16
4-13. REW TENSION ADJUSTMENT 4-17
4-14. MACHINE CONDITION SETTING (2) 4-19
4-15. OSCILLATION FREQUENCY ADJUSTMENT 4-18
4-16. CAPSTAN PHASE POSITION ADJUSTMENT (AU-65) 4-18
4-17. CAPSTAN PHASE POSITION ADJUSTMENT (AU-62) 4-19
4-18. CAPSTAN PHASE POSITION ADJUSTMENT (AU-63) 4-19
4-19. TRACKING FIX ADJUSTMENT (AU-65) 4-20
4-20. TRACKING FIX ADJUSTMENT (AU-63) 4-20
4-21. TRACKING FIX ADJUSTMENT (AU-62) 4-21
4-22. x1/32 SPEED ADJUSTMENT (1) 4-21
4-23. x1/32 SPEED ADJUSTMENT (2) 4-22
4-24. PG SHIFTER ADJUSTMENT (FOR AU-65/62) 4-23
4-25. PG SHIFTER ADJUSTMENT (FOR AU-63) 4-23
4-26. REC SHIFTER ADJUSTMENT (FOR AU-65) 4-24
4-27. DRUM PHASE FLUCTUATION CONFIRMATION (FOR AU-65) 4-24
4-28. DRUM PHASE FLUCTUATION CONFIRMATION (FOR AU-62/63) 4-25
4-29. CTL AMP CONFIRMATION (FOR AU-6) 4-25
4-30. CTL AMP CONFIRMATION (FOR AU-62/63) 4-26

4-31. CTL-RECOVER CIRCUIT OPERATING CONFIRMATION 4-26
4-32. 50 PIN PARALLEL REMOTE CAPSTAN OVERRIDE SYNCHRONIZATION ADJUSTMENT 4-27
4-33. SWITCHING POWER SOURCE ADJUSTMENT (FOR AU-63) 4-29
4-34. OFFSET ADJUSTMENT (1) (FOR AU-63) 4-29
4-35. OFFSET ADJUSTMENT (2) (FOR AU-63) 4-29
4-36. MACHINE CONDITION SETTING (3) 4-30
4-37. CAPSTAN FG ADJUSTMENT (FOR AU-63) 4-30
4-38. CTL PHASE SHIFTER ADJUSTMENT (FOR AU-63) 4-31
4-39. X-VALUE ADJUSTMENT (FOR AU-63) 4-31
4-40. AT GAIN ADJUSTMENT (1) (FOR AU-63) 4-32
4-41. AT GAIN ADJUSTMENT (2) (FOR AU-63) 4-32
4-42. ENVELOPE INPUT LEVEL ADJUSTMENT (FOR AU-63) 4-33
4-43. AUTO TRACKING CONFIRMATION (FOR AU-63) 4-33

5. LINEAR AUDIO SECTION (W6) FLOWCHART FOR AU-65 4-34
LINEAR AUDIO SECTION FLOWCHART FOR AU-63 AND AU-62 4-35
LINEAR AUDIO SECTION 4-36

5-1. MACHINE CONDITION SETTING (FOR AU-65) 4-36
5-2. DOLBY ENCODER LEVEL ADJUSTMENT (FOR AU-65) 4-36
5-3. E-E OUTPUT LEVEL ADJUSTMENT (FOR AU-65) 4-37
5-4. METER LEVEL ADJUSTMENT (FOR AU-65) 4-38
5-5. PLAYBACK EQ ADJUSTMENT (FOR AU-65) 4-39
5-6. PLAYBACK MASTER PHASE CONFIRMATION (FOR AU-65) 4-39
5-7. DOLBY DECODE LEVEL ADJUSTMENT (FOR AU-65) 4-40
5-8. PLAYBACK OUTPUT LEVEL ADJUSTMENT (FOR AU-65) 4-40
5-9. OSCILLATION RESONANCE POINT ADJUSTMENT (FOR AU-65) 4-41
5-10. AUDIO BIAS CURRENT ADJUSTMENT (FOR AU-65) 4-42
5-11. RECORDING EQUALIZER ADJUSTMENT (FOR AU-65) 4-43
5-12. RECORDING CURRENT ADJUSTMENT (FOR AU-65) 4-45
5-13. CH1→CH2 CROSS TALK CANCEL ADJUSTMENT (FOR AU-65) 4-46
5-14. CH2→CH1 CROSS TALK CANCEL ADJUSTMENT (FOR AU-65) 4-48
5-15. RECORDING PHASE ADJUSTMENT (FOR AU-65) 4-50
5-16. MACHINE CONDITION SETTING (FOR AU-63/62) 4-52
5-17. PLAYBACK EQ CONFIRMATION (FOR AU-62/63) 4-52
5-18. PLAYBACK MASTER PHASE CONFIRMATION (FOR AU-62/63) 4-53
5-19. DOLBY DECODE LEVEL ADJUSTMENT (FOR AU-62/63) 4-53
5-20. PLAYBACK OUTPUT LEVEL ADJUSTMENT (FOR AU-62/63) 4-54
5-21. METER LEVEL ADJUSTMENT (FOR AU-62/63) 4-55

6. DECODER & CTCM BOARD (1/2)
DECODER & CTCM SECTION (1/2) (W4) FLOWCHART FOR AU-65 4-56

6-1. SIGNAL SOURCE 4-57
6-2. NON-STANDARD PLL ADJUSTMENT (1) (FOR AU-65) 4-58
6-3. STANDARD PLL CONFIRMATION (FOR AU-65) 4-59
6-4. STANDARD PLL ADJUSTMENT (FOR AU-65) 4-59
6-5. NON-STANDARD PLL ADJUSTMENT (2) (FOR AU-65) 4-60
6-6. COMPONENT INPUT Y OUTPUT LEVEL CONFIRMATION (FOR AU-65) 4-61
6-7. CLAMP REFERENCE ADJUSTMENT (FOR AU-65) 4-62

6-8. Pr A/D INPUT LEVEL ADJUSTMENT (FOR AU-65) 4-63
6-9. Y BURST LEVEL ADJUSTMENT (FOR AU-65) 4-65
6-10. CTCM LEVEL CONFIRMATION (FOR AU-65) 4-66
6-11. C BURST & SYNC LEVEL ADJUSTMENT (FOR AU-65) 4-66

7. MODULATION & DEMODULATION (W3) BOARD (1/2)
MODULATION & DEMODULATION SECTION (1/2) (W3) FLOWCHART FOR AU-65 4-67
MODULATION & DEMODULATION SECTION (1/2) (W3) FLOWCHART FOR AU-63 4-69
MODULATION & DEMODULATION SECTION (1/2) (W3) FLOWCHART FOR AU-62 4-71

7-1. Y PLAYBACK FM CARRIER LEVEL ADJUSTMENT 4-73
7-2. C PLAYBACK FM CARRIER LEVEL ADJUSTMENT 4-73
7-3. Y GROUP DELAY EQ CONFIRMATION OR ADJUSTMENT 4-74
7-4. C GROUP DELAY EQ CONFIRMATION OR ADJUSTMENT 4-74
7-5. Y TERM PRESET OR ADJUSTMENT 4-75
7-6. Y EQ 3 ADJUSTMENT 4-75
7-7. Y EQ 4 ADJUSTMENT 4-75
7-8. Y AUTO EQ DT VR PRESET 4-75
7-9. C PLAYBACK FM B.P.F. FREQUENCY RESPONSE ADJUSTMENT 4-76
7-10. Y DROP OUT DETECT BALANCE ADJUSTMENT 4-76
7-11. C DROP OUT DETECT BALANCE ADJUSTMENT 4-77
7-12. Y SUPER LIMITER PULSE POSITION ADJUSTMENT 4-78
7-13. C SUPER LIMITER PULSE POSITION ADJUSTMENT 4-78
7-14. Y NON-LINEAR DE-EMPHASIS LEVEL ADJUSTMENT 4-79
7-15. Y NON-LINEAR DE-EMPHASIS LIMITER LEVEL ADJUSTMENT 4-80
7-16. C NON-LINEAR DE-EMPHASIS LEVEL ADJUSTMENT 4-81
7-17. C NON-LINEAR DE-EMPHASIS LIMITER LEVEL ADJUSTMENT 4-82
7-18. Y DE-MODULATOR BALANCE ADJUSTMENT 4-83
7-19. C DE-MODULATOR BALANCE ADJUSTMENT 4-84
7-20. VIDEO CLIP ADJUSTMENT (FOR AU-65) 4-85
7-21. Y NON-LINEAR PRE-EMPHASIS LEVEL ADJUSTMENT (FOR AU-65) 4-86
7-22. VIDEO/SYNC METER ADJUSTMENT (FOR AU-65) 4-87
7-23. Y NON-LINEAR EMPHASIS LIMITER LEVEL ADJUSTMENT (FOR AU-65) 4-88
7-24. C NON-LINEAR PRE-EMPHASIS LEVEL ADJUSTMENT (FOR AU-65) 4-89
7-25. C NON-LINEAR LIMITER ADJUSTMENT (FOR AU-65) 4-90
7-26. Y FM DEVIATION ADJUSTMENT (FOR AU-65) 4-92
7-27. Y WHITE & DARK CLIP ADJUSTMENT (FOR AU-65) 4-94
7-28(A). Y MODULATOR BALANCE ADJUSTMENT (BY USING SPECTRUM ANALYZER) (FOR AU-65) 4-95
7-28(B). Y MODULATOR BALANCE ADJUSTMENT (BY USING OSCILLOSCOPE) (FOR AU-65) 4-96
7-29. Y DEVIATION CONFIRMATION (FOR AU-65) 4-97
7-30. C CLAMP PULSE POSITION ADJUSTMENT (FOR AU-65) 4-98
7-31. C FM DEVIATION ADJUSTMENT (FOR AU-65) 4-99
7-32. C WHITE & DARK CLIP ADJUSTMENT (FOR AU-65) 4-101
7-33(A). C MODULATOR BALANCE ADJUSTMENT (BY USING SPECTRAM ANALYZER) (FOR AU-65) 4-102

7-33(B). C MODULATOR BALANCE ADJUSTMENT (BY USING OSCILLOSCOPE) (FOR AU-65) 4-103
7-34. C DEVIATION CONFIRMATION (FOR AU-65) 4-104
7-35(A). C REC FM B.P.F. FREQUENCY RESPONSE ADJUSTMENT (FACTORY ADJ.) (FOR AU-65) 4-105
7-35(B). C REC FM B.P.F. FREQUENCY RESPONSE ADJUSTMENT (FIELD ADJ.) (FOR AU-65) 4-105
7-36. Y NON LINEAR DE-EMPHASIS LIMITER LEVEL ADJUSTMENT (FOR AU-65) 4-106
7-37. C NON LINEAR DE-EMPHASIS LIMITER ADJUSTMENT (FOR AU-65) 4-107
7-38. Y PLAYBACK GROUP DELAY EQ ADJUSTMENT (FOR PAL) 4-109
7-39. Y PLAYBACK FREQUENCY RESPONSE ADJUSTMENT (FOR AU-62/65) 4-110
7-40. Y PLAYBACK FREQUENCY RESPONSE ADJUSTMENT (FOR AU-63) 4-111
7-41. C PLAYBACK FREQUENCY RESPONSE ADJUSTMENT (FOR AU-62/65) 4-112
7-42. C PLAYBACK FREQUENCY RESPONSE ADJUSTMENT (FOR AU-63) 4-112
7-43. Y DEMOD OUTPUT DC LEVEL ADJUSTMENT (FOR PAL) 4-113

8. TBC & SYNC GEN. (W1) BOARD (1/2)
TBC & SYNC GEN. SECTION (1/2) (W1) FLOWCHART FOR AU-65, AU-63 AND AU-62 4-114

8-1. MACHINE CONDITION SETTING 4-115
8-2. S/H ADJUSTMENT 4-115
8-3. VCO (14.3MHz/17.7MHz) ADJUSTMENT 4-116
8-4. REF SCH DET ADJUSTMENT 4-117
8-5. REF SCH & REF CF CONFIRMATION 4-119
8-6. SYSTEM PHASE ADJUSTMENT 4-121
8-7. SYSTEM H PHASE ADJUSTMENT 4-123
8-8. Y BURST SEP CIRCUIT ADJUSTMENT (COARSE) 4-124
8-9. Y BURST SEP CIRCUIT ADJUSTMENT (FINE) 4-124
8-10. C BURST SEP CIRCUIT ADJUSTMENT (COARSE) 4-125
8-11. C BURST SEP CIRCUIT ADJUSTMENT (FINE) 4-125
8-12. Y APC ADJUSTMENT (COARSE) 4-126
8-13. Y APC ADJUSTMENT (FINE) 4-126
8-14. C APC ADJUSTMENT (COARSE) 4-127
8-15. C APC ADJUSTMENT (FINE) 4-127
8-16. SEARCH VCO CONFIRMATION FOR AU-65/63/62 4-128
8-17. D/A REFERENCE VOLTAGE ADJUSTMENT (1) 4-129
8-18. D/A REFERENCE VOLTAGE ADJUSTMENT (2) 4-129
8-19. B-Y PHASE ADJUSTMENT 4-130
8-20. R-Y PHASE ADJUSTMENT FOR AU-65/63/62 4-130

9. ENCODER (W2) BOARD (1/2)
ENCODER SECTION (1/2) (W2) FLOWCHART FOR AU-65, AU-63 AND AU-62 4-131

9-1. MACHINE CONDITION SETTING 4-133
9-2. Y A/D PEDESTAL VOLTAGE ADJUSTMENT 4-133
9-3. C A/D PEDESTAL VOLTAGE ADJUSTMENT 4-134
9-4. Y A/D INPUT GAIN ADJUSTMENT 4-134
9-5. C A/D INPUT GAIN ADJUSTMENT 4-135
9-6. COMPOSITE SYNC LEVEL ADJUSTMENT 4-135

9-7. Y BLANKING DC VOLTAGE ADJUSTMENT 4-136
9-8. COMPONENT Y OUTPUT LEVEL ADJUSTMENT 4-136
9-9. COMPONENT Pb LEVEL ADJUSTMENT 4-137
9-10. ID PULSE ADJUSTMENT 4-137
9-11. COMPONENT Pr LEVEL ADJUSTMENT 4-138
9-12. VIDEO BLANKING DC ADJUSTMENT 4-138
9-13. VIDEO 2 OUTPUT LEVEL ADJUSTMENT 4-139
9-14. BURST ADJUSTMENT 4-140
9-15. VIDEO BURST LEVEL ADJUSTMENT 4-141
9-16. CARRIER LEAKAGE ADJUSTMENT 4-141
9-17. VIDEO OUTPUT VECTOR ADJUSTMENT 4-142
9-18. COMPONENT Y/C TIMING ADJUSTMENT 4-142
9-19. COMPOSITE Y/C TIMING ADJUSTMENT 4-143
9-20. VIDEO 1 OUTPUT LEVEL CONFIRMATION 4-144
9-21. Y/C OUT VECTOR ADJUSTMENT (1) 4-145
9-22. Y/C OUT VECTOR ADJUSTMENT (2) 4-146
9-23. VIDEO OUTPUT FREQUENCY RESPONSE ADJUSTMENT 4-146
9-24. Y OUTPUT FREQUENCY RESPONSE ADJUSTMENT 4-147
9-25. SUPER IMPOSE CHARACTER LEVEL ADJUSTMENT 4-147

10. TBC & SYNC GEN. (W1) BOARD (2/2)
TBC & SYNC GEN. SECTION (2/2) (W1) FLOWCHART FOR AU-65 4-148
TBC & SYNC GEN. SECTION (2/2) (W1) FLOWCHART FOR AU-63 AND AU-62 4-148
10-1. VIDEO PHASE ADJUSTMENT (FOR AU-65) 4-149
10-2. VIDEO PHASE ADJUSTMENT (FOR AU-63/62) 4-150
10-3. CK2 PHASE ADJUSTMENT 4-151

11. ENCODER (W2) BOARD (2/2)
— VISC CONTROL SECTION (FOR PAL) —
VISC CONTROL SECTION (2/2) (W2) FLOWCHART
FOR AU-65, AU-63 AND AU-62, PAL MODEL 4-152
11-1. MACHINE CONDITION SETTING 4-153
11-2. VISC PHASE ADJUSTMENT (1) 4-154
11-3. VISC DC ADJUSTMENT 4-155
11-4. REFERENCE VOLTAGE ADJUSTMENT 4-155
11-5. VISC PHASE ADJUSTMENT (2) 4-156
11-6. VISC ADJUSTMENT 4-157
11-7. VISC CONTROL CONFIRMATION 4-158

12. MODULATION & DEMODULATION (W3) BOARD (2/2)
MODULATION & DEMODULATION SECTION (2/2) (W3) FLOWCHART
FOR AU-65 4-160
MODULATION & DEMODULATION SECTION (2/2) (W3) FLOWCHART
FOR AU-63 4-162
MODULATION & DEMODULATION SECTION (2/2) (W3) FLOWCHART
FOR AU-62 4-163
12-1. Y SYNC TIP FREQUENCY ADJUSTMENT (FOR AU-65) 4-164
12-2. C BLANKING FREQUENCY ADJUSTMENT (FOR AU-65) 4-166
12-3. Y PLAYBACK EQ2 ADJUSTMENT (FOR AU-62/AU-65) 4-167

12-4. Y PLAYBACK EQ2 ADJUSTMENT (FOR AU-63) 4-168
12-5. Y PLAYBACK FREQUENCY RESPONSE (EQ1) ADJUSTMENT (FINE) 4-169
12-6. Y PLAYBACK EQ2, EQ1 CONFIRMATION 4-170
12-7. Y CH1 RECORDING CURRENT ADJUSTMENT (FOR AU-65) 4-172
12-8. . Y CH2 RECORDING CURRENT ADJUSTMENT (FOR AU-65) 4-174
12-9. Y SELF RECORDING PLAYBACK FREQUENCY RESPONSE ADJUSTMENT (FOR AU-65) 4-176
12-10. Y HF LINEARITY ADJUSTMENT (1) 4-178
12-11. C PLAYBACK FREQUENCY RESPONSE ADJUSTMENT (FINE) (FOR AU-65/AU-62) 4-179
12-12. C PLAYBACK FREQUENCY RESPONSE ADJUSTMENT (FINE) (FOR AU-63) 4-179
12-13. C CH1 RECORDING CURRENT ADJUSTMENT (FOR AU-65) 4-180
12-14. C CH2 RECORDING CURRENT ADJUSTMENT (FOR AU-65) 4-182
12-15. C SELF RECORDING PLAYBACK FREQUENCY RESPONSE ADJUSTMENT (FOR AU-65) 4-184
12-16. Y PLAYBACK FM CARRIER LEVEL RE-ADJUSTMENT (FINE) 4-186
12-17. C PLAYBACK FM CARRIER LEVEL RE-ADJUSTMENT 4-186
12-18. C PLAYBACK RF LEVEL ADJUSTMENT 4-187
12-19. C PLAYBACK RF LEVEL ADJUSTMENT (FINE) 4-187
12-20. Y DROP OUT DETECTION LEVEL ADJUSTMENT (FOR AU-65/62) 4-188
12-21. Y DROP OUT DETECTION LEVEL ADJUSTMENT (FOR AU-63) 4-189
12-22. C DROP OUT DETECTION LEVEL ADJUSTMENT (FOR AU-65/62) 4-190
12-23. C DROP OUT DETECTION LEVEL ADJUSTMENT (FOR AU-63) 4-191
12-24. TRACKING METER ADJUSTMENT 4-192
12-25. Y S/H PULSE ADJUSTMENT (FOR PAL) 4-192
12-26. Y 3.375MHz B.P.F. ADJUSTMENT (FOR PAL) 4-193
12-27. Y AUTO EQ FREQUENCY CHARACTERISTIC ADJUSTMENT (1) (FOR AU-65/62 PAL) 4-193
12-28. Y AUTO EQ FREQUENCY CHARACTERISTIC ADJUSTMENT (2) (FOR AU-63 PAL) 4-195
12-29. Y AUTO EQ V MODE CONFIRMATION (FOR PAL) 4-196
12-30. Y SELF RECORDING AUTO EQ FREQUENCY CHARACTERISTIC CONFIRMATION (FOR AU-65 PAL) 4-196
12-31. C S/H PULSE ADJUSTMENT (FOR PAL) 4-197
12-32. C AUTO EQ FREQUENCY CHARACTERISTIC ADJUSTMENT (FOR PAL) 4-198
12-33. C AUTO EQ V MODE CONFIRMATION (FOR PAL) 4-199
12-34. C SELF RECORDING AUTO EQ FREQUENCY CHARACTERISTIC CONFIRMATION (FOR AU-65 PAL) 4-200

13. DECODER & CTCM (W4) BOARD (2/2)
DECODER & CTCM SECTION (2/2) (W4) FLOWCHART FOR AU-65 4-201
13-1. OH CHROMA LEVEL ADJUSTMENT (FOR AU-65) 4-203
13-2. MODULATION LEVEL ADJUSTMENT (FOR AU-65) 4-204
13-3. RESET WIDTH ADJUSTMENT (FOR AU-65) 4-204
13-4. DIFFERENTIAL GAIN & DIFFERENTIAL PHASE ADJUSTMENT (FOR AU-65 NTSC) 4-205
13-5. Y/C INPUT Y FREQUENCY RESPONSE ADJUSTMENT (FINE) (FOR AU-65 NTSC) 4-205
13-6. LINE INPUT Y FREQUENCY RESPONSE ADJUSTMENT (FINE) (FOR AU-65) 4-206

13-7. COMPONENT INPUT CARRIER BALANCE ADJUSTMENT (FINE) (FOR AU-65) 4-207
13-8. LINE INPUT CARRIER BALANCE ADJUSTMENT (FINE) (FOR AU-65) 4-207
13-9. LINE INPUT 1H DELAY CARRIER LEAKAGE ADJUSTMENT (FINE) (FOR AU-65 NTSC) 4-208
13-10. LINE INPUT 2H DELAY CARRIER LEAKAGE ADJUSTMENT (FINE) (FOR AU-65 NTSC) 4-208
13-11. 1H CHROMA LEVEL ADJUSTMENT (FOR AU-65) 4-209
13-12. CARRIER LEAKAGE ADJUSTMENT (FOR AU-65) 4-209
13-13. LINE INPUT CARRIER LEAKAGE ADJUSTMENT (FINE) (3) (FOR AU-65) 4-210
13-14(A). COMPONENT INPUT Y/C TIMING ADJUSTMENT (FINE) (BY USING WAVEFOME MONITOR) (FOR AU-65) 4-211
13-14(B). COMPONENT INPUT Y/C TIMING ADJUSTMENT (FINE) (BY USING OSCILLOSCOPE) (FOR AU-65) 4-212
13-15(A). LINE INPUT Y/C TIMING ADJUSTMENT (FINE) (BY USING WAVEFOME MONITOR) (FOR AU-65) 4-213
13-15(B). LINE INPUT Y/C TIMING ADJUSTMENT (FINE) (BY USING OSCILLOSCOPE) (FOR AU-65) 4-214
13-16. C SYNC POSITION ADJUSTMENT (FINE) (FOR AU-65) 4-215
13-17. LINE INPUT Y LEVEL ADJUSTMENT (FINE) (FOR AU-65) 4-215
13-18. Y/C INPUT Y LEVEL ADJUSTMENT (FINE) (FOR AU-65) 4-216
13-19. COMPONENT INPUT VECTOR ADJUSTMENT (FINE) (FOR AU-65) 4-217
13-20. LINE INPUT VECTOR ADJUSTMENT (FINE) (FOR AU-65) 4-218
13-21. Y/C INPUT VECTOR ADJUSTMENT (FINE) (FOR AU-65) 4-219
13-22. SCH ADJUSTMENT (FOR AU-65) 4-220
13-23. VISC PHASE ADJUSTMENT (FOR AU-65) 4-223
13-24. 13.5MHz PLL ADJUSTMENT (1) (FOR AU-65) 4-224
13-25. 13.5MHz PLL ADJUSTMENT (2) (FOR AU-65) 4-225
13-26. 13.5MHz PLL ADJUSTMENT (3) (FOR AU-65) 4-226

14. AUDIO (W6) BOARD (2/2)
— FM AUDIO SECTION —
FM AUDIO SECTION (W6) FLOWCHART FOR AU-65 4-227
FM AUDIO SECTION (W6) FLOWCHART FOR AU-63 AND AU-62 4-227

14-1. MACHINE CONDITION SETTING (FOR AU-65) 4-228
14-2. FM E-E OUTPUT LEVEL ADJUSTMENT (FOR AU-65) 4-228
14-3. FM METER LEVEL ADJUSTMENT (FOR AU-65) 4-229
14-4. FM CARRIER ADJUSTMENT (FOR AU-65) 4-230
14-5(A). FM RECORDING CURRENT ADJUSTMENT (BY USING SPECTRUM ANALYZER) (FOR AU-65) 4-231
14-5(B). FM RECORDING CURRENT ADJUSTMENT (BY USING OSCILLOSCOPE) (FOR AU-65) 4-232
14-6. FM PLAYBACK LEVEL ADJUSTMENT (FOR AU-65) 4-233
14-7. FM PLAYBACK OUTPUT LEVEL ADJUSTMENT (FOR AU-65) 4-233
14-8. FM REC/PLAYBACK LEVEL CONFIRMATION (FOR AU-65) 4-234
14-9. MACHINE CONDITION SETTING (FOR AU-63/62) 4-236
14-10. FM CARRIER ADJUSTMENT (FOR AU-62/63) 4-236
14-11. FM PLAYBACK LEVEL ADJUSTMENT (FOR AU-62/63) 4-237
14-12. FM PLAYBACK OUTPUT LEVEL ADJUSTMENT (FOR AU-62/63) 4-237

14-13. FM METER LEVEL ADJUSTMENT (FOR AU-62/63) 4-238

15. FRONT PANEL

15-1. ALARM OSC & LEVEL ADJUSTMENT 4-240

16. AU-F65 (OPTION TCG/TCR)

16-1. TRIMMER ADJUSTMENT 4-241

❶ LOCATION OF TEST POINTS & CONTROLS (B1, AU-F65) 4-242
❷ LOCATION OF TEST POINTS & CONTROLS (W1, W2) 4-243
❸ LOCATION OF TEST POINTS & CONTROLS (W3, W4) 4-244
❹ LOCATION OF TEST POINTS & CONTROLS (W5, W6) 4-245

SAFETY PRECAUTIONS

GENERAL GUIDELINES

1. When servicing, observe the original lead dress. If a short circuit is found, replace all parts which have been overheated or damaged by the short circuit.
2. After servicing, see to it that all the protective devices such as insulation barriers, insulation papers shields are properly installed.
3. After servicing, make the following leakage current checks to prevent the customer from being exposed to shock hazards.

LEAKAGE CURRENT COLD CHECK

1. Unplug the AC cord and connect a jumper between the two prongs on the plug.
2. Measure the resistance value, with an ohm meter, between the jumpered AC plug and each exposed metallic cabinet part on the equipment such as screwheads connectors, control shafts,etc. When the exposed metallic part has a return path to the chassis, the reading should be between 1M ohm and 5.2M ohm.
   When the exposed metal does not have a return path to the chassis, the reading must be

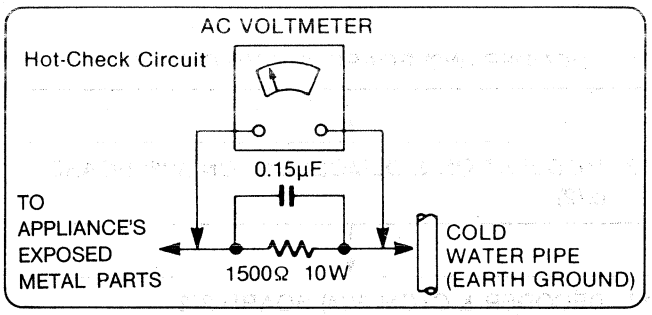

Figure 1

LEAKAGE CURRENT HOT CHECK (See Figure 1)

1. Plug the AC cord directly into the AC outlet. Do not use an isolation transformer for this check.
2. Connect a 1.5k ohm, 10 watts resistor, in parallel with a 0.15uF capacitor, between each exposed metallic part on the set and a good earth ground such as a water pipe, as shown in Figure 1.
3. Use an AC voltmeter, with 1000 ohms/volt or more sensitivity, to measure the potential across the resistor.
4. Check each exposed metallic part, and measure the voltage at each point.
5. Reverse the AC plug in the AC outlet repeat each of the above measurements.
6. The potential at any point should not exceed 0.75 volts RMS. A leakage current tester (Simpson Model 229 equivalent) may be used to make the hot checks, leakage current must not exceed 1/2 milliamp. In case a measurement is outside of the limits specified, there is a possibility of a shock hazard, and the equipment should be repaired and rechecked before it is returned to the customer.

ELECTROSTATICALLY SENSITIVE(ES) DEVICES

Some semiconductor (solid state) devices can be damaged easily by static electricity. Such components commonly are calledElectrostatically Sensitive (ES) Devices. Examples of typical ES devices are integrated circuits and some field-effect transistors and semiconductor "chip" components. The following techniques should be used to help reduce the incidence of component damage caused by static electricity.

1. Immediately before handling any semiconductor component or semiconductor-equipped assembly, drain off any electrostatic charge on your body by touching a known earth ground.
   Alternatively, obtain and wear a commercially available discharging wrist strap device, which should be removed for potential shock reasons prior to applying power to the unit under test.
2. After removing an electrical assembly equipped with ES devices, place the assembly on a conductive surface such as aluminum foil, to prevent electrostatic charge buildup or exposure of the assembly.
3. Use only a grounded-tip soldering iron to solder or unsolder ES devices.
4. Use only an anti-static solder removal device classified as "anti-static" can generate electrical charges sufficient to damage ES devices.
5. Do not use freon-propelled chemicals. These can generate electrical charges sufficient to damage ES devices.
6. Do not remove a replacement ES device from its protective package untilimmediately before you are ready to install it. (Most replacementES devices are packaged with leads eletcrically shorted together by conductive foam, aluminum foil or comparable conductive material).
7. Immediately before removing the protective material from the leads of replacement ES device, touch the protective material to the chassis or circuit assembly into which the device will be installed.

   CAUTION : Be sure no power is applied to the chassis or circuit, and observe all otner asfety precautions.
8. Minimize bodily motions when handling unpackaged replacement ES devices. (Otherwise harmless motion such as the brushing together of your clothes fabric or the lifting of your foot from a carpeted floor can generate static electricity sufficient to damage an ES device).

1. INFORMATION FOR ELECTRICAL ADJUSTMENT

This section describes adjustment procedures and methods of AU-65, AU-63 and AU-62. And this section is NTSC & PAL common used. Refer to this information before electrical adjustment.

1-1. MAIN ADJUSTMENT FLOWCHART

1) This Electrical Adjustment Procedures are common for the following 6 models, they are AU-65, AU-63 and AU-62 of NTSC and PAL. The correspond model is shown at the top of the each adjustment.

2) It is important to adjust each according to the correct steps which are shown as "Main Adjustment Flowchart" at below and "Section Adjustment Flowchart" at the top page of the each section.

MAIN ADJUSTMENT FLOWCHART

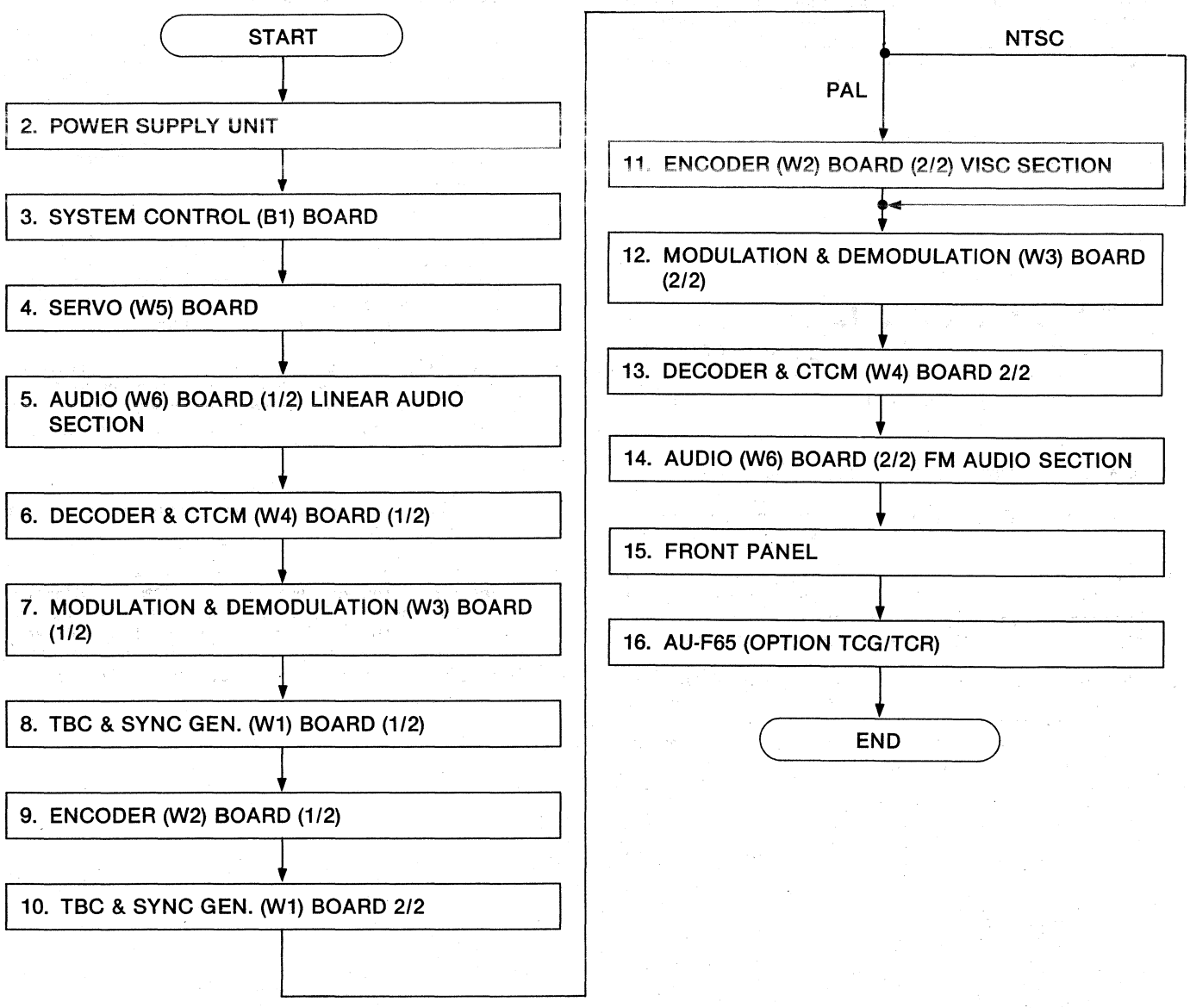

1-2. RECOMMENDED TEST AND SERVICE EQUIPMENT

PART NO.	N A M E	REMARK
TSG-130 (M-II TYPE)	COMPOSITE / COMPONENT / YC / Y CTCM SIGNAL GENERATOR	TEKTRONIX
1750	SCH METER (WFM, SCH, VECTOR etc.) FOR NTSC	TEKTRONIX
1751	SCH METER (WFM, SCH, VECTOR etc.) FOR PAL	TEKTRONIX
------	DIGITAL VOLT METER	
------	FREQUENCY COUNTER	1mHz Range ~
------	DUAL TRACE OSCILLOSCOPE	Frequency bandwidth more than 100 MHz
------	VTVM (ACVM) Frequency Band width 4Hz ~ 500KHz	Sound Technology or Audio Precision equivalent
------	SPECTRUM ANALYZER	Frequency bandwidth 10 Hz ~ 120 MHz
------	SINEWAVE SIGNAL GENERATOR	Frequency bandwidth 20 MHz
VFK0132	TENTELOMETER	TENTEL
VFM7087EAG	ALIGNMENT TAPE (※ 1) FOR NTSC MODEL	FOR AU-660/640/630/620 (NTSC)
VFM7180EG	ALIGNMENT TAPE (※ 1) FOR PAL MODEL	FOR AU-650B/640/630/620 (PAL)
	ALIGNMENT TAPE (※ 2)	PENDING
ET-100YC	S-VIDEO/BNC ADAPTOR	
VFK0601	EXTEMDER	FOR B1 BOARD AND AU-F65

NOTE

※1. This alignment tape is used for AU-660 or 650B/640/630/620
If the AU-65/63/62 is adjusted with this alignment tape (VFM7087EAG NTSC), (VFM7180EG PAL) the following adjustments can not be adjusted.

7-3	Y GROUP DELAY EQ ADJ.
7-4	C GROUP DELAY EQ ADJ.
7-9	C PLAYBACK FM B.P.F FREQUENCY RESPONSE
7-14-N or P	Y NL DE-EMPHASIS LIMITER LEVEL ADJ.
7-16-N or P	C NL DE-EMPHASIS LIMITER LEVEL ADJ.
7-35(A)or(B)	C REC FM B.P.F. FREQUENCY RESPONSE A
10-3	CK2 PHASE ADJ.
12-4-N or P	Y PLAYBACK EQ2 ADJ.
12-10-N or P	Y HF LINEARITY ADJ.
12-2~11-7	VISC ADJUSTMENT SECTION (PAL)

※2. This alignment tape is not available now.
When the alignmment tape is available for AU-65/63/62, Technical Information will be issued.

1-3. SIGNAL GENERATOR CONNECTION METHOD & INPUT SELECT SWITCH SETTING (FOR ELECTRICAL ADJUSTMENT)

CONNECTION METHOD (FOR AU-65)

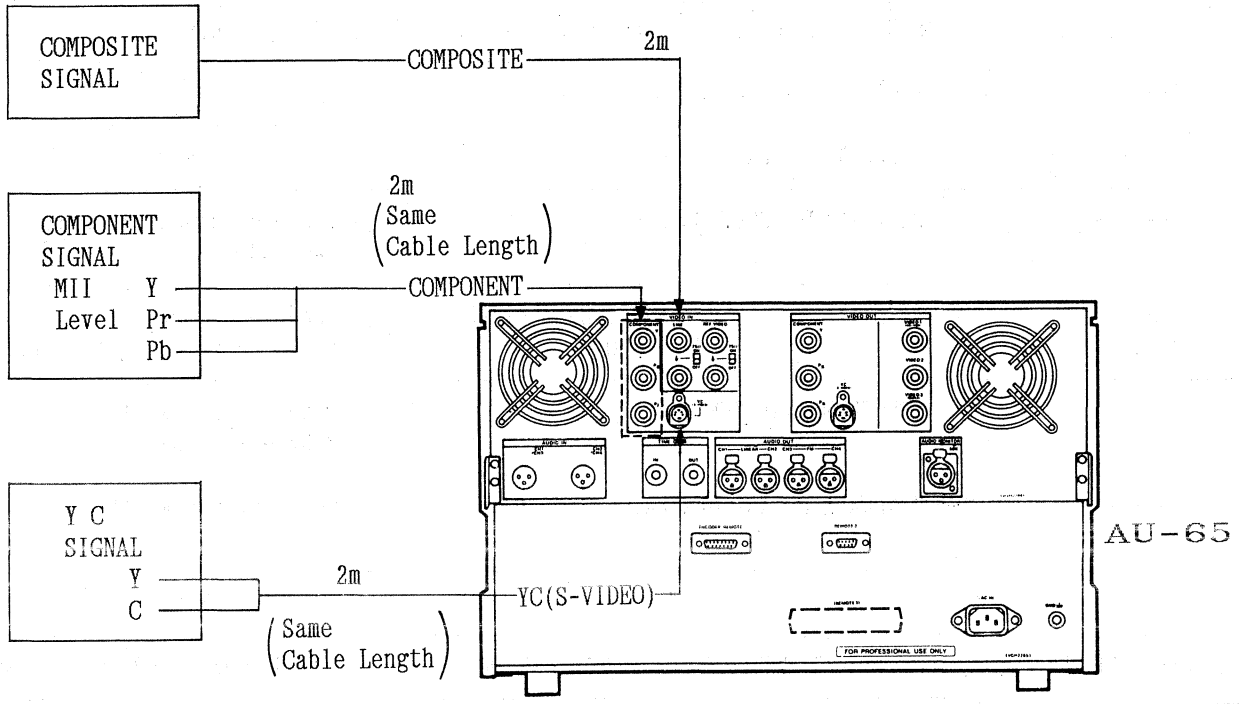

INPUT SELECT SWITCH SETTING (FOR AU-65)

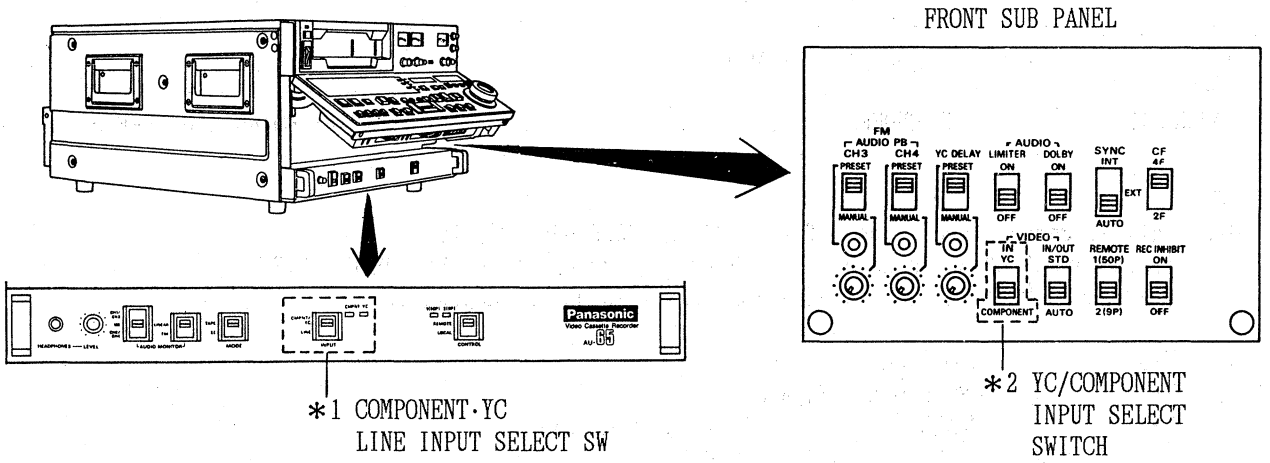

INPUT SIGNAL NAME	*1	*2
COMPOSITE	LINE POSITION	-----
COMPONENT	COMPONENT/YC POSITION	COMPONENT POSITION
Y C	COMPONENT/YC POSITION	YC POSITION

2. POWER SUPPLY UNIT

(POWER UNIT)

2-1. +5V ADJUSTMENT (FOR AU-65/63/62 NTSC & PAL)

TEST POINT	MODE	TAPE USED	M.EQ.	INPUT SIGNAL	ADJUSTMENT
TP19 (on W5)	REC (AU-65) PLAY (SU-62/63)	BLANKTAPE	Digital Voltage Meter	----------	R81 (+5V) (Top Panel of the Power Supply Box)

Step 1.

1. Adjust R81 so that the voltage at TP19 is +5 ± 0.2V (DC).

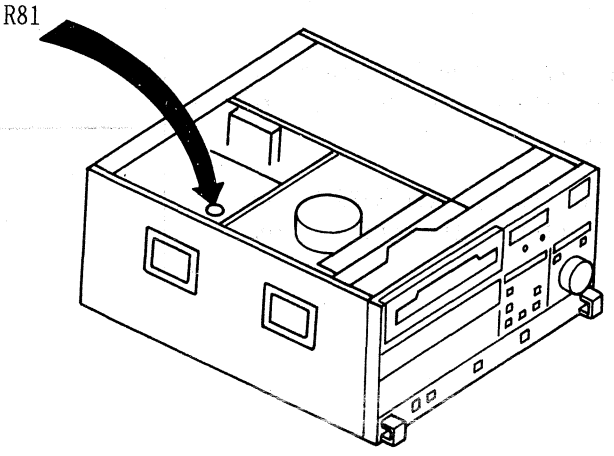

2-2. +7.5V ADJUSTMENT (FOR AU-65/63/62 NTSC & PAL)

(POWER UNIT)

TEST POINT	MODE	TAPE USED	M.EQ.	INPUT SIGNAL	ADJUSTMENT
CP53-3 (+7.5V OUTPUT)	------	-------	VOLTAGE METER	----------	R122 (+7.5)

Note:
This adjustment is done after repairing this power unit only.

Step 1.

1. Connect the Power Unit in outside of VTR.

2. Adjust R122 so that the voltage at CP53-3 (+7.5V output connector on

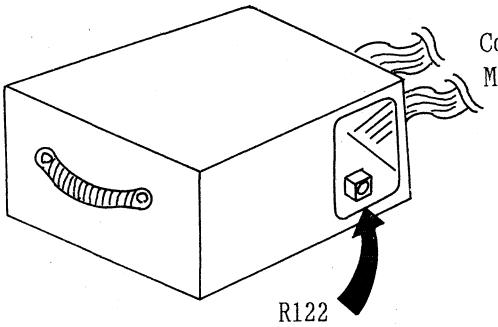

Specification

+7.5V terminal = 8.2 ± 0.002V

(8.2 = 7.5 + 10%)

3. SYSTEM CONTROL (B1) BOARD

3-1. SUPER IMPOSE HORIZONTAL POSITION ADJUSTMENT (FOR AU-65/63/62 NTSC & PAL)

TEST POINT	MODE	TAPE USED	M.EQ.	INPUT SIGNAL	ADJUSTMENT
VIDEO 3 OUT	E - E	-------	MONITOR TV	----------	VC1 (SUPER POSITION)

1. Open the Front Panel and press the MENU SW (SW3) on the System Control (B1) Board.
2. Adjust VC1 so that the MENU Picture is in the center of the monitor screen.

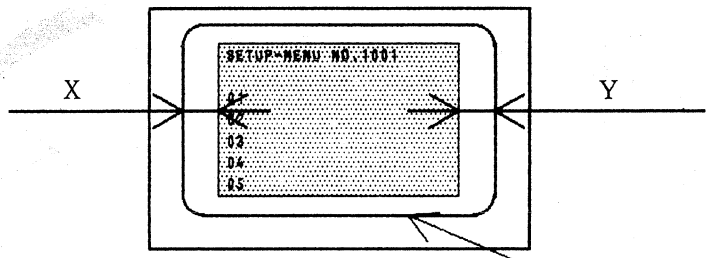

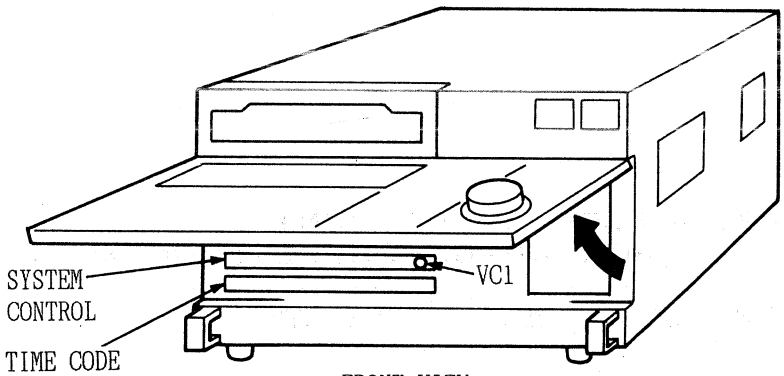

4. SERVO (W5) BOARD

SERVO SECTION (W5) FLOWCHART FOR AU-62

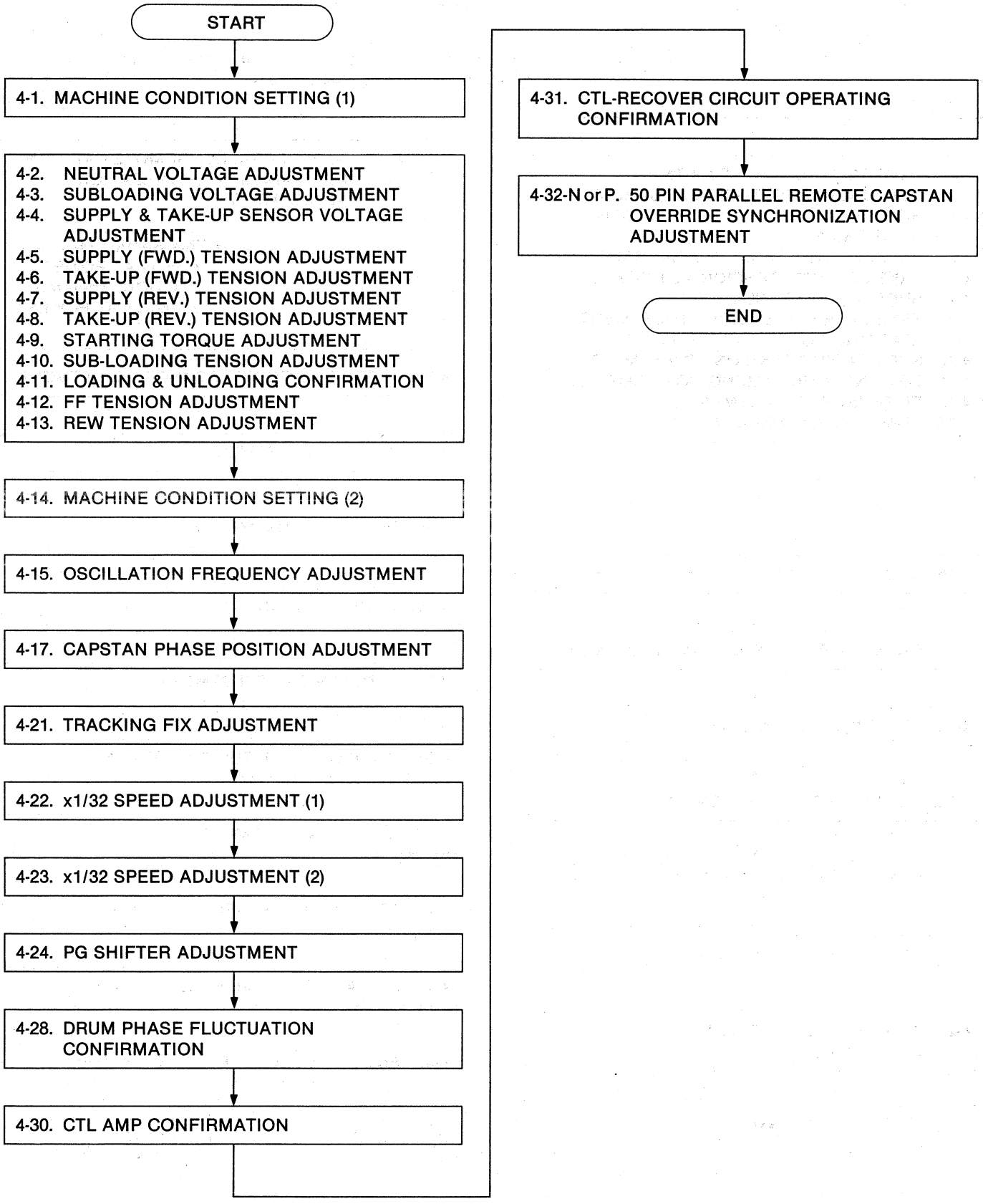

SERVO SECTION (W5) FLOWCHART FOR AU-63

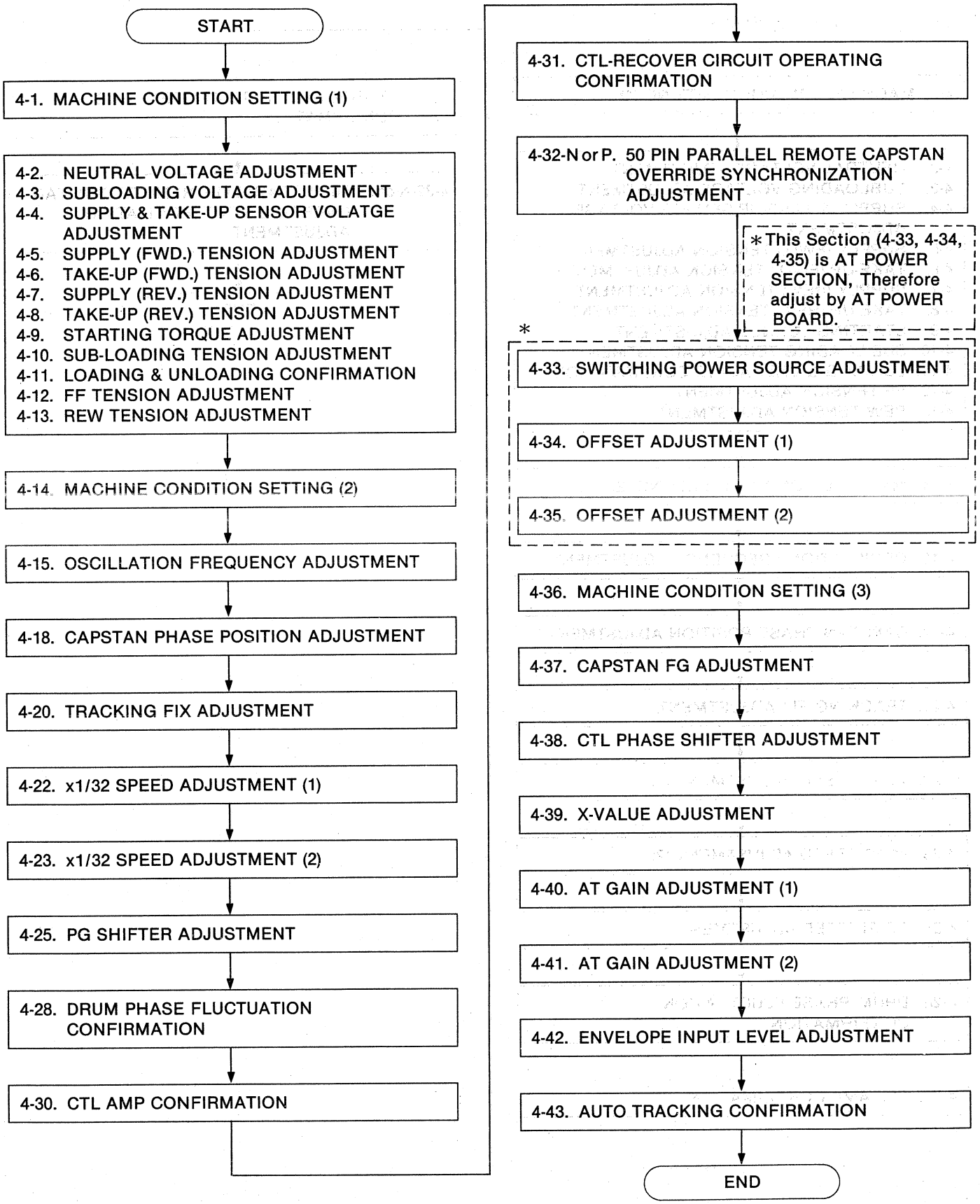

SERVO SECTION (W5) FLOWCHART FOR AU-65

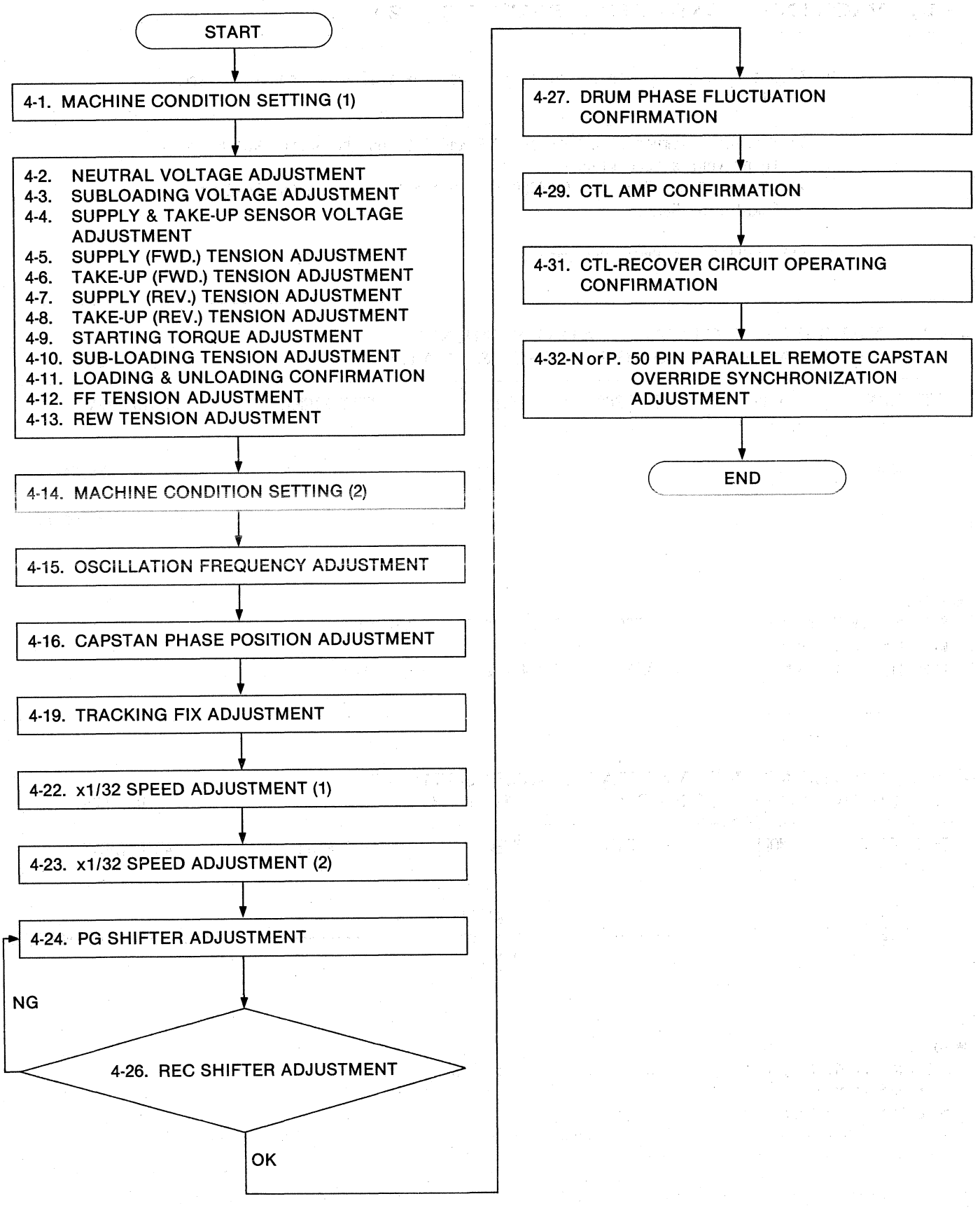

4. SERVO (W5) BOARD

4-1. MACHINE CONDITION SETTING (2)

1. When the Cassette Compartment is removed, the following conditions are required.

   1) Connect a jumper wire between TP19 and TP20 on the Servo (W5) Board to prevent a tape slack.
   2) Use the Dummy Plug (1) (VFK0361) to place the unit in the Loading Completion Mode.

2. SYNC SELECT (on Front Sub Panel) : AUTO Side

4-2. NEUTRAL VOLTAGE ADJUSTMENT (FOR AU-65/63/62 NTSC & PAL)

(W5: SERVO)

TEST POINT	MODE	TAPE USED	M.EQ.	INPUT SIGNAL	ADJUSTMENT
TP303 TP304	EJECT	-------	Digital Voltage Meter	----------	VR302 (S TENSION FIX) VR303 (T TENSION FIX)

*Note:
Set the D.V.M to the mV range so you can read the ± voltage.

⊘ VR302 TP303 = 2.5 ± 0.05V (DC)

⊘ VR303 TP304 = 2.5 ± 0.05V (DC)

4-3. SUBLOADING VOLTAGE ADJUSTMENT (FOR AU-65/63/62 NTSC & PAL)

(W5: SERVO)

TEST POINT	MODE	TAPE USED	M.EQ.	INPUT SIGNAL	ADJUSTMENT
TP312	EJECT	-------	Digital Voltage Meter	----------	VR308 (SUB LOAD VOLTAGE)

*Note:
Set the D.V.M. to the mV range so you can read the ± voltage.

SPECIFICATION : 35 ± 1mV

4-4. SUPPLY & TAKE-UP SENSOR VOLTAGE ADJUSTMENT (FOR AU-65/63/62 NTSC & PAL)

(W5 SERVO)

TEST POINT	MODE	TAPE USED	M.EQ.	INPUT SIGNAL	ADJUSTMENT
TP303 TP304	EJECT ↓ STOP (LOADING)	-------	Digital Voltage Meter	----------	S & T MAGNETIC SENSOR BASE UNITS

Step 1.
MACHINE CONDITION

1. Remove the Cassette Compartment.
2. Refer to Set Up Conditions at the beginning of this SECTION (SERVO - W5 Machine Condition 4-1).

Step 2

1. Place the Mechanical Neutral Plate as shown in figure.

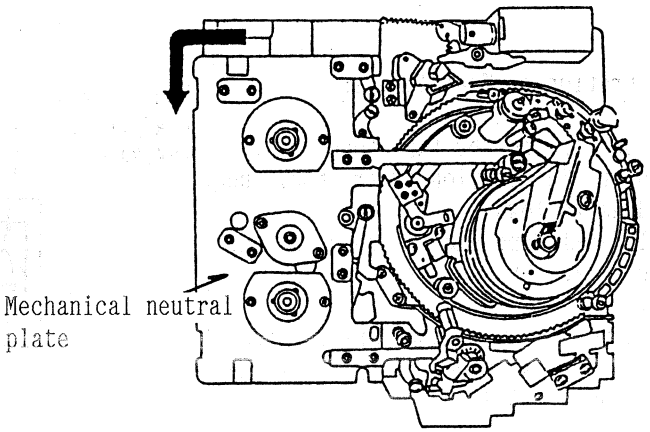

Step 3.

1. D. V. M. : TP303
2. Confirm the DC voltage is 2500mV (2.5V) ± 50mV (DC).
3. If it is not, loosen the 2 screws and insert the eccentric screw driver into Hole (B).
4. Adjust the Supply Magnetic Sensor Base Unit so that the DC voltage is 2500mV (2.5V) ± 50mV (DC).

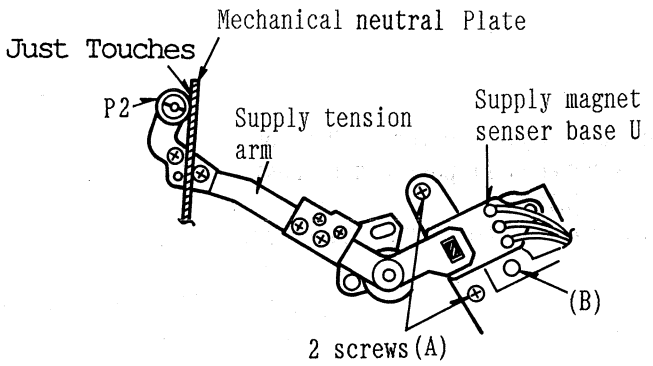

Step 4.

1. D. V. M. : TP304
2. Confirm the DC voltage is 2500mV (2.5V) ± 50mV (DC).
3. If it is not, insert the eccentric screw driver into Hole (B).
4. Adjust the Take-up Magnetic Sensor Base Unit so that the DC voltage is 2500mV (2.5V) ± 50mV (DC).

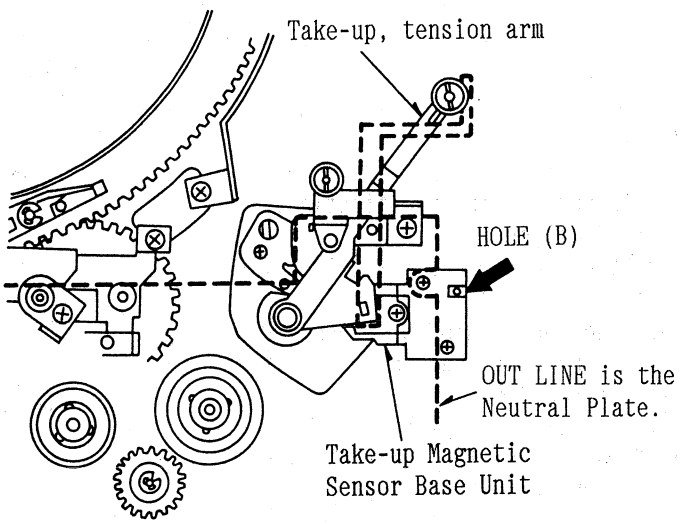

4-5. SUPPLY (FWD.) TENSION ADJUSTMENT (FOR AU-65/63/62 NTSC & PA1)

(W5 SERVO)

TEST POINT	MODE	TAPE USED	M.EQ.	INPUT SIGNAL	ADJUSTMENT
"A" (P1 ~ P2)	PLAY	BLANK 90 min. TAPE BEGINNING PORTION	TENSION METER	----------	SUPPLY STOPPER PIN BASE UNIT

Step 1.
MACHINE CONDITION

1. Remove the Cassette Compartment.
2. Refer to Set Up Conditions at the beginning of this SECTION (SERVO - W5 Machine Condition 4-1).

Step 2.

Calibration of Tentelometer

1. Before performing the tape tension adjustment. The Tension Meter should be checked as follows.
2. Use MII Metal Tape and a 1 ounce weight.
3. Pull up a tape by hand as shown in figure.
4. Adjust a hex screw on the Tension Meter so that the tension meter reading is set for a 1 ounce (28.34g).

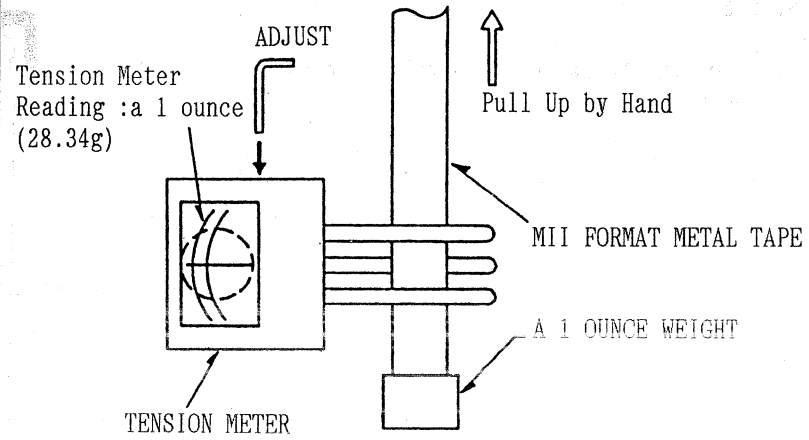

STEP 3.

1. Insert the tension meter to Portion "A" that is between P1 post and P2 post.
2. Mode : PLAY
3. Set the tension for "A" = 23g ± 2g.

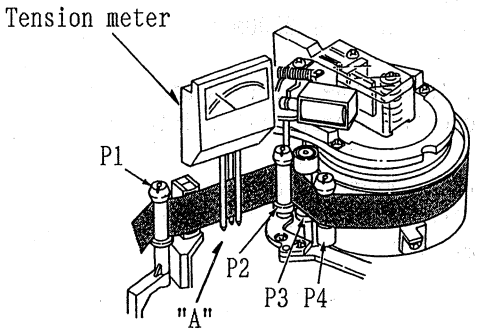

A = 23g ± 2g

Step 4.

1. If it is not within specification, loosen the screw (A).
2. Insert the eccentric screw driver into Hole (B).
3. Adjust the position of S. Stopper Pin Base Unit so that the tension is 23g ± 2g at portion "A".
4. Finally, tighten the screw (A).
5. Reconfirm the tension after the screw (A) is tightened.

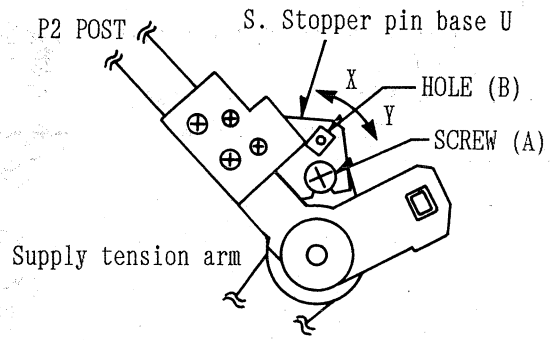

4-6. TAKE-UP (FWD.) TENSION ADJUSTMENT (FOR AU-65/63/62 NTSC & PAL)

(W5 SERVO)

TEST POINT	MODE	TAPE USED	M.EQ.	INPUT SIGNAL	ADJUSTMENT
"A" (P9 ~ P10)	PLAY	BLANK 90 min. TAPE BEGINNING PORTION	TENSION METER	----------	TAKE-UP STOPPER PIN BASE UNITS

Step 1. MACHINE CONDITION	1. Remove the Cassette Compartment. 2. Refer to Set Up Conditions at the beginning of this SECTION (SERVO - W5 Machine Condition 4-1).
Step 2. 1. Insert the tension meter to Portion "A" that is between P9 post and P10 post. 2. Mode : PLAY 3. Confirm that the tension meter indicates 23g ± 2g.	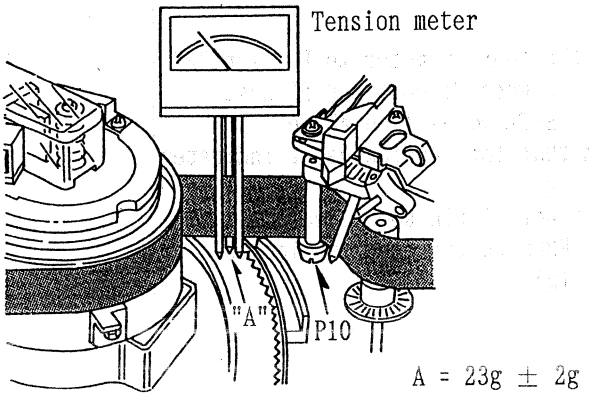
Step 3. 1. If it is not within specification, loosen the screw (A). 2. Insert the eccentric screw driver into Hole (B). 3. Adjust the position of T. Stopper Pin Base Unit so that the tension is 23g ± 2g. 4. Finally, tighten the screw (A). 5. Reconfirm the tension after the screw (A) is tightened.	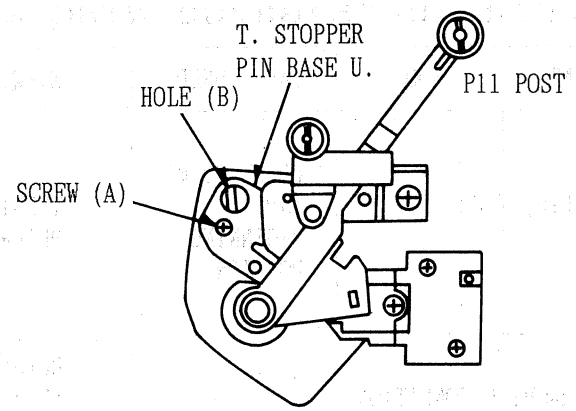

4-7. SUPPLY (REV.) TENSION ADJUSTMENT (FOR AU-65/63/62 NTSC &PAL)

(W5 SERVO)

TEST POINT	MODE	TAPE USED	M.EQ.	INPUT SIGNAL	ADJUSTMENT
"A" (P1 ~ P2)	SHTL × -1	BLANK 90 min. TAPE BEGINNING PORTION	TENSION METER	----------	VR309 (S. REV. TENSION)

Step 1. MACHINE CONDITION	1. Refer to Set Up Conditions at the beginning of this SECTION (SERVO - W5 Machine Condition 4-1).
Step 2. 1. Insert the tension meter to Portion "A" that is between P1 post and P2 post. 2. Mode : SHTL × -1 (See Above) 3. Confirm that the tension meter indicates 25 ± 1 (g). 4. If it is not within specification, adjust VR309 so that the tension is 25 ± 1 (g).	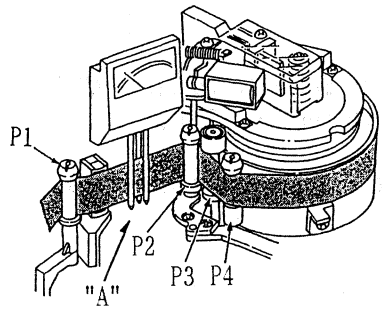 A = 25 ± 1 (g)

4-8. TAKE-UP (REV.) TENSION ADJUSTMENT (FOR AU-65/63/62 NTSC & PAL)

(W5 SERVO)

TEST POINT	MODE	TAPE USED	M.EQ.	INPUT SIGNAL	ADJUSTMENT
"A" (P9 ~ P10)	SHTL × -1	BLANK 90 min. TAPE BEGINNING PORTION	TENSION METER	----------	VR305 (T. REV. TENSION)

Step 1. MACHINE CONDITION	1. Refer to Set Up Conditions at the beginning of this SECTION (SERVO - W5 Machine Condition 4-1).
Step 2. 1. Insert the tension meter to Portion "A" that is between P9 post and P10 post. 2. Mode : SHTL × -1 (See Above) 3. Confirm that the tension meter indicates 30 ~ 35 (g). 4. If it is not within specification, adjust VR309 so that the tension is 30 ~ 35 (g).	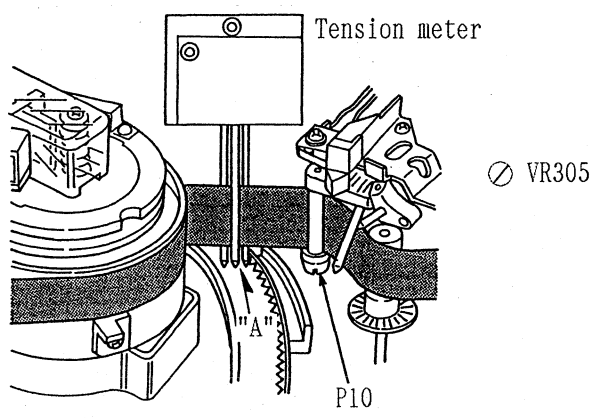 A = 30 ~ 35 (g)

4-9. STARTING TORQUE ADJUSTMENT (FOR AU-65/63/62 NTSC & PAL)

(W5 SERVO)

TEST POINT	MODE	TAPE USED	M.EQ.	INPUT SIGNAL	ADJUSTMENT
TP302 (HOT) TP310 (GND)	PLAY	BLANK 90 min. TAPE BEGINNING PORTION	Digital Volt Meter	----------	VR301 (START TRQ)

Step 1. MACHINE CONDITION	Refer to Set Up Conditions at the beginning of this SECTION (SERVO - W5 Machine Condition 4-1).
Note: Measure the voltage after the voltage is stabilized. 1. Adjust VR301 so that the voltage at TP302 is -200mV ± 5mV.	⊘ VR301 (TP302) - (TP310) = -200mV ± 5mV

4-10. SUB-LOADING TENSION ADJUSTMENT (FOR AU-65-63/62 NTSC & PAL)

(W5 SERVO)

TEST POINT	MODE	TAPE USED	M.EQ.	INPUT SIGNAL	ADJUSTMENT
"A" (P9 ~ P10)	PLAY	BLANK 90 min. TAPE BEGINNING PORTION	TENSION METER	----------	VR307 (LOAD TENSION)

Step 1. MACHINE CONDITION	1. Refer to Set Up Conditions at the beginning of this SECTION (SERVO - W5 Machine Condition 4-1). 2. Connect a jumper wire between TP309 and TP311 to make a sub-loading condition after the tape is Loaded.
Step 2. 1. Insert the tension meter to Portion "A" that is between P9 post and P10 post. 2. Mode : PLAY 3. Confirm that the tension meter indicates 8 ~ 10 (g). 4. If it is not within the specification, adjust VR307 so that the tension is 8 ~ 10 (g). 5. Finally, disconnect the jumper wire between TP309 and TP311.	Tension meter 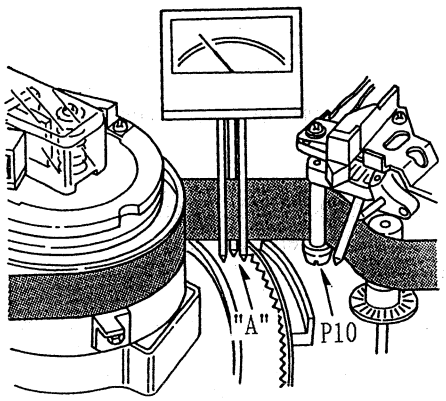 ⊘ VR307 A = 8 ~ 10 (g)

4-11. LOADING & UNLOADING CONFIRMATION (FOR AU-65/63/62 NTSC & PAL)

(W5 SERVO)

TEST POINT	MODE	TAPE USED	M.EQ.	INPUT SIGNAL	ADJUSTMENT
-------	STOP ↓ ↑ EJECT	BLANK 90 min. TAPE	--------	----------	----------

Step 1.

1. Confirm that the tape is going to Loading mode and Unloading mode properly when the unit is placed in STOP and EJECT at several time.
2. Power Switch : OFF (EJECT mode)
3. Power Switch : ON
4. Confirm STEP 1 again.

Step 2.

1. If it is not, readjust the following items.
   A. Section 3 - 2 (Sub - Loading Voltage Adjustment)
   B. Section 3 - 9 (Sub - Loading Tension Adjustment)
2. Repeat STEP 2.

4-12. FF TENSION ADJUSTMENT (FOR AU-65/63/62 NTSC & PAL)

(W5 SERVO)

TEST POINT	MODE	TAPE USED	M.EQ.	INPUT SIGNAL	ADJUSTMENT
"A" (P1 ~ P2)	FF	BLANK 90 min. TAPE BEGINNING PORTION	TENSION METER	----------	VR304 (S. FF TENSION)

Step 1.

1. Insert the tension meter to Portion "A" that is between P1 post and P2 post.
2. Mode : FF
3. Confirm that the tension meter indicates 15 ~ 20 (g).
4. If it is not within the specification, adjust VR304 so that the tension is 15 ~ 20 (g).

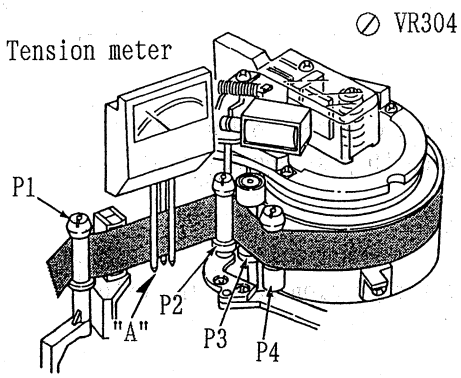

A = 15 ~ 20 (g)

4-13. REW TENSION ADJUSTMENT (FOR AU-65/63/62 NTSC & PAL)

(W5 SERVO)

TEST POINT	MODE	TAPE USED	M.EQ.	INPUT SIGNAL	ADJUSTMENT
"A" (P1 ~ P2)	REW	BLANK 90 min. TAPE END OF TAPE PORTION	TENSION METER	----------	VR306 (S. REW TENSION)

Step 1.

1. Insert the tension meter to Portion "A" that is between P1 post and P2 post.
2. Mode : REW
3. Confirm that the tension meter indicates 40 ~ 50 (g).
4. If it is not within specification, adjust VR306 so that the tension is 40 ~ 50 (g).

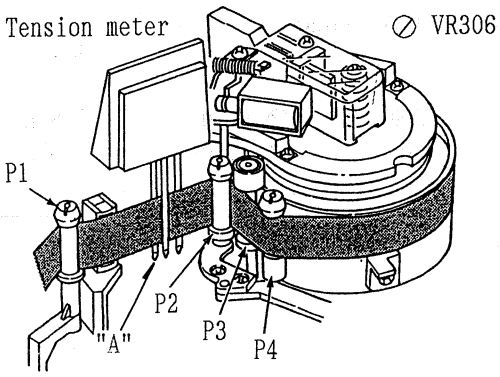

A = 40 ~ 50 (g)

4-14. MACHINE CONDITION SETTING (2) (FOR AU-63 AUTO TRACKING)

(W5 AT)

Set the switches on the Front Sub Panel as follows except special condition.

1. MODE SELECT : EE (FOR AU-65)
2. COLOR FRAMING : 2FMode
3. AT POWER ---------- When servo section is adjusted, for AU-63 please disconnect the connector P10 on the AT Power Board to preset the piezo head for fix AT.

4-15. OSCILLATION FREQUENCY ADJUSTMENT (FOR AU-65/63/62 NTSC & PAL)

(W5 SERVO)

TEST POINT	MODE	TAPE USED	M.EQ.	INPUT SIGNAL	ADJUSTMENT
TP103	PLAY	PRE-RECORDED 90 min. TAPE (MIDDLE PORTION)	FREQUENCY COUNTER	----------	VC101
Step 1. MACHINE CONDITION			Refer to Set Up Conditions at 4-14 Machine Condition Setting (2).		

NTSC : ⊘ VC101 SPECIFICATION : 3579545 ± 50 [Hz]
PAL : ⊘ VC101 SPECIFICATION : 2985940 ± 50 [Hz]

4-16. CAPSTAN PHASE POSITION ADJUSTMENT (FOR AU-65 NTSC & PAL)

(W5 SERVO)

TEST POINT	MODE	TAPE USED	M.EQ.	INPUT SIGNAL	ADJUSTMENT
TP105 TP102	REC	BLANK TAPE (MIDDLE PORTION)	OSCILLOSCOPE	COLOR BAR	VR103 (CAP REF.)
Step 1. MACHINE CONDITION			Refer to Set Up Conditions at 4-14 Machine Condition Setting (2).		

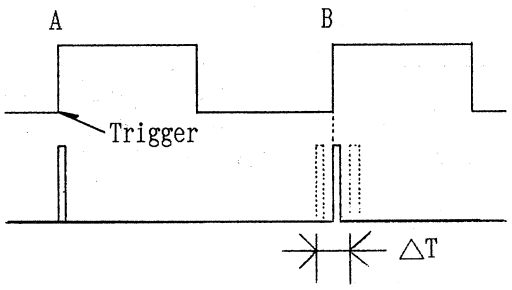

⊘ VR103 △T = 0 ± 70 [μsec]

Trigger = "A" point of TP105

4-17. CAPSTAN PHASE POSITION ADJUSTMENT (FOR AU-62 NTSC & PAL)

(W5 SERVO)

TEST POINT	MODE	TAPE USED	M.EQ.	INPUT SIGNAL	ADJUSTMENT
TP105 TP102	PLAY	PRE-RECORDED 90 min. TAPE (MIDDLE PORTION)	OSCILLOSCOPE	----------	VR103 (CAP REF.)
Step 1. MACHINE CONDITION			Refer to Set Up Conditions at 4-14 Machine Condition Setting (2)		

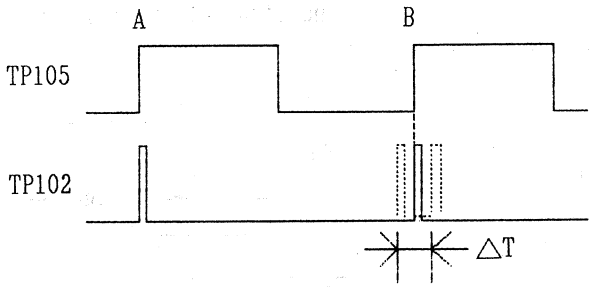

⊘ VR103 △T = 0 ± 70 [μsec]

Trigger = "A" point of TP105

4-18. CAPSTAN PHASE POSITION ADJUSTMENT (FOR AU-63 NTSC & PAL)

(W5 SERVO)

TEST POINT	MODE	TAPE USED	M.EQ.	INPUT SIGNAL	ADJUSTMENT
TP3 TP102	PLAY	PRE-RECORDED 90 min. TAPE (MIDDLE PORTION)	OSCILLOSCOPE	----------	VR103 (CAP REF.)
Step 1. MACHINE CONDITION			Refer to Set Up Conditions at 4-14 Machine Condition Setting (2).		

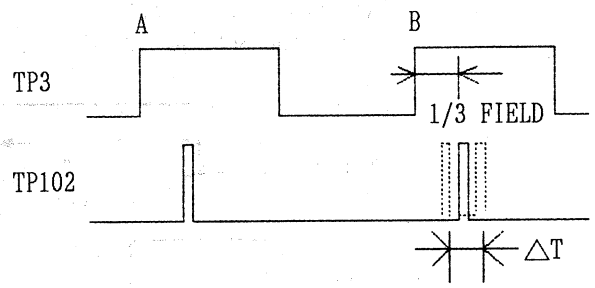

⊘ VR103 △T = 0 ± 70 [μsec]

Trigger = "A" point of TP3

4-19. TRACKING FIX ADJUSTMENT (FOR AU-65 NTSC & PAL)

(W5 SERVO)

TEST POINT	MODE	TAPE USED	M.EQ.	INPUT SIGNAL	ADJUSTMENT
TP3 TP110	SELF REC/PB	BLANK TAPE	OSCILLOSCOPE	COMPONENT COLOR BAR	VR3 (R/P TRACK)

Step 1. MACHINE CONDITION	1. FRONT PANEL TRACKING VR : DETENT POSITION 2. Refer to Set Up Conditions at 4-14 Machine Condition Setting (2).
Step 2. SCOPE CH1 : TP3 (Trigger) CH2 : TP110	⊘ VR3 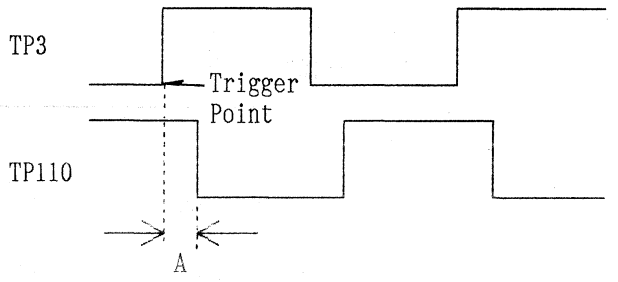 A = 0 ± 100 [μsec]

4-20. TRACKING FIX ADJUSTMENT (FOR AU-63 NTSC & PAL)

(W5 SERVO)

TEST POINT	MODE	TAPE USED	M.EQ.	INPUT SIGNAL	ADJUSTMENT
TP3 TP110	PLAY	ALIGNMENT TAPE (COLOR BAR)	OSCILLOSCOPE	----------	VR3 (R/P TRACK) R/P TRACK is VR's name This is used for AT

Step 1. MACHINE CONDITION	Refer to Set Up Conditions at 4-14 Machine Condition Setting (2).
Step 2. SCOPE CH1 : TP3 (Trigger) CH2 : TP110 1. Set the sweep range of scope so that the "A" width measure across 9 Lines on the oscilloscope face.	⊘ VR3 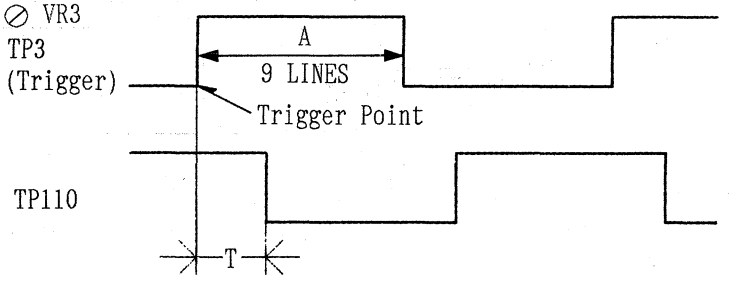 T = 3 ± 0.1 LINES (A : T = 9 : 3)

4-21. TRACKING FIX ADJUSTMENT (FOR AU-62 NTSC & PAL)

(W5 SERVO)

TEST POINT	MODE	TAPE USED	M.EQ.	INPUT SIGNAL	ADJUSTMENT
TP3 TP110	PLAY	ALIGNMENT TAPE	OSCILLOSCOPE	----------	VR3 (R/P TRACK)
Step 1. MACHINE CONDITION			FRONT PANEL TRACKING VR : DETENT POSITION		
Step 2. SCOPE CH1 : TP3 (Trigger) CH2 : TP110			⊘ VR3 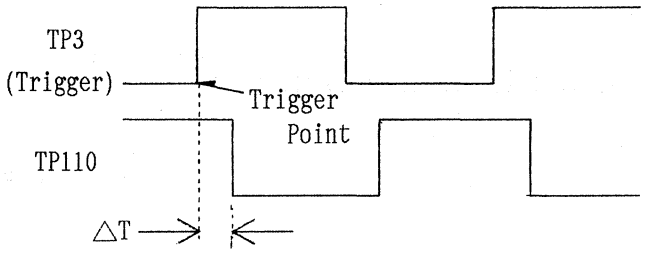 △T = 0 ± 100 [μsec]		

4-22. ×1/32 SPEED ADJUSTMENT (1) (FOR AU-65/63/62 NTSC & PAL)

(W5 SERVO)

TEST POINT	MODE	TAPE USED	M.EQ.	INPUT SIGNAL	ADJUSTMENT
TP115	SHTL ×1/32	PRE-RECORDED 90 min. TAPE (MIDDLE PORTION)	FREQUENCY COUNTER	----------	VR101 (1/32 C)
Step 1. FREQUENCY COUNTER CONDITION			SW : LOW and L. P. F.		
Step 2. SPECIFICATION			⊘ VR101 NTSC 67.5 ± 5 [Hz] PAL 56.25 ± 5 [Hz]		

4-23. ×1/32 SPEED ADJUSTMENT (2) (FOR AU-65/63/62 NTSC & PAL)

(W5 SERVO)

TEST POINT	MODE	TAPE USED	M.EQ.	INPUT SIGNAL	ADJUSTMENT
TP113 TP115	SHTL ×1/32	PRE-RECORDED 90 min. TAPE (MIDDLE PORTION)	OSCILLOSCOPE	----------	VR102 (1/32 A) VR101 (1/32 C)

Step 1. MACHINE CONDITION	Refer to Set Up Conditions at 4-14 Machine Condition Setting (2).
Step 2. 1. SCOPE : TP113 2. Confirm that the waveform is duty 50%.	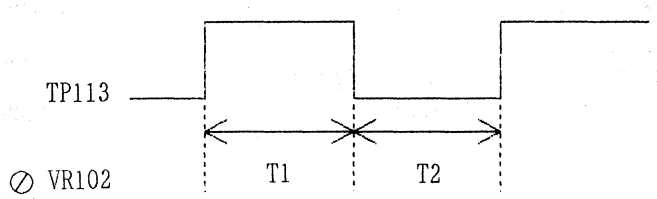 ⊘ VR102 ⊘ VR101 T1 : T2 = 4 : 6 ~ 6 : 4
Step 3. 1. If it is not within specification, adjust VR102 so that T1 : T2 = 5 : 5 2. After that adjust VR101 (Section 4-22 ×1/32 SPEED ADJ.(1)). 3. Reconfirm the Step 2.	

4-24. PG SHIFTER ADJUSTMENT (FOR AU-65/62 NTSC & PAL)

(W5 SERVO)

TEST POINT	MODE	TAPE USED	M.EQ.	INPUT SIGNAL	ADJUSTMENT
TP13 TP7	PLAY	ALIGNMENT COLOR BAR	OSCILLOSCOPE	----------	SW 1 (FINE) SW 2 (COARSE)

Step 1.

Note:
Confirm that the Y RF envelope is maximized at TP301 on W3 Board. (The mechanical interchangeability should be completed.)

1. Adjust SW1 and SW2 so that the T = 2.75 ± 0.1 [H] as shown in figure.

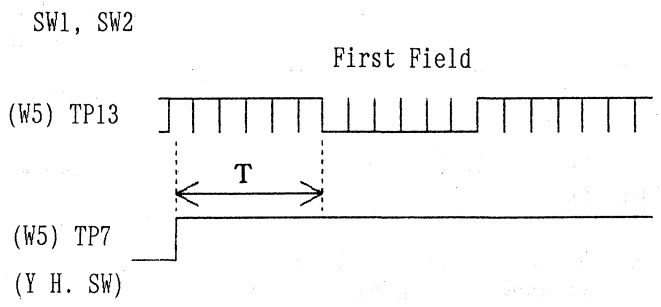

T = 2.75 ± 0.1 [H]

4-25. PG SHIFTER ADJUSTMENT (FOR AU-63 NTSC & PAL)

(W5 SERVO)

TEST POINT	MODE	TAPE USED	M.EQ.	INPUT SIGNAL	ADJUSTMENT
TP13 TP702	PLAY	ALIGNMENT COLOR BAR	OSCILLOSCOPE	----------	SW 1 (FINE) SW 2 (COARSE)

Step 1.
MACHINE CONDITION

Refer to Set Up Conditions at 4-14 Machine Condition Setting (2).

Step 2.

Note:
Confirm that the Y RF envelope is maximized at TP301 on W3 Board. (The mechanical interchangeability should be completed.)

1. Adjust SW1 and SW2 so that the T = 2.75 ± 0.1 [H] as shown in figure.

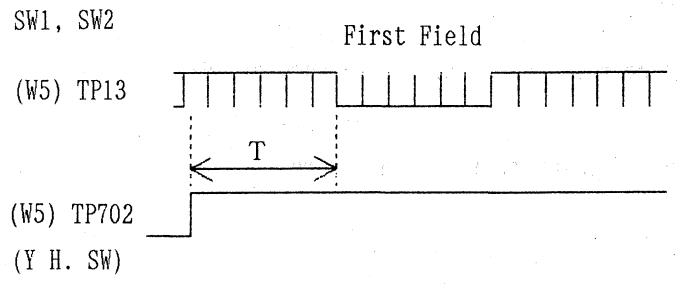

T = 2.75 ± 0.1 [H]

4-26. REC SHIFTER ADJUSTMENT (FOR AU-65 NTSC & PAL)

(W5 SERVO)

TEST POINT	MODE	TAPE USED	M.EQ.	INPUT SIGNAL	ADJUSTMENT
TP13 TP7	REC	BLANK TAPE	OSCILLOSCOPE	COMPONENT COLOR BAR	VR1 (REC SHIFT)

Step 1. MACHINE CONDITION	1. Refer to Set Up Conditions at 4-14 Machine Condition Setting (2). 2. INPUT SELECT : COMPONENT (Pull Out Drawer & Front Sub Panel)
Step 2. SCOPE CH1 : TP13 SCOPE CH2 : TP7 1. Adjust VR1 so that the T = 2.75 ± 0.1 [H] as shown in figure.	⊘ VR1 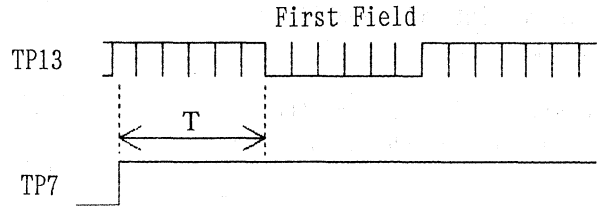 T = 2.75 ± 0.1 [H]

4-27. DRUM PHASE FLUCTUATION CONFIRMATION (FOR AU-65 NTSC & PAL)

(W5 SERVO)

TEST POINT	MODE	TAPE USED	M.EQ.	INPUT SIGNAL	ADJUSTMENT
TP3 TP7	REC	BLANK TAPE	OSCILLOSCOPE	COMPONENT COLOR BAR	----------

Step 1. MACHINE CONDITION	Refer to Set up Conditions at 4-14 Machine Condition Setting (2).
Step 2. SCOPE CH1 : TP3 (Trigger) SCOPE CH2 : TP7 1. Trigger the scope at rising edge of TP3. 2. Confirm that the T fluctuation is less than 6 μsec as shown in figure.	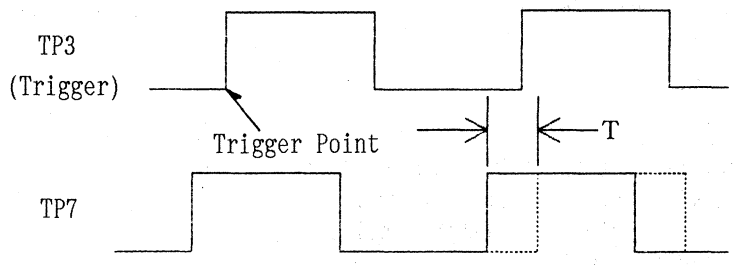 T = less than 6 μsec.
Step 3. 1. If it is not with in specification, readjust from beginning of this section (4-2 ~).	

4-28. DRUM PHASE FLUCTUATION CONFIRMATION (FOR AU-62/63 NTSC & PAL)

(W5 SERVO)

TEST POINT	MODE	TAPE USED	M.EQ.	INPUT SIGNAL	ADJUSTMENT
TP3 TP7	PLAY	PRE-RECORDED TAPE 90 min. MIDDLE PORTION	OSCILLOSCOPE	---------	----------

Step 1. MACHINE CONDITION	Refer to Set Up Conditions at 4-14 Machine Condition Setting (2).
Step 2. SCOPE CH1 : TP3 (Trigger) SCOPE CH2 : TP7 1. Trigger the scope at rising edge of TP3. 2. Confirm that the T fluctuation is less than 6 μsec as shown in figure.	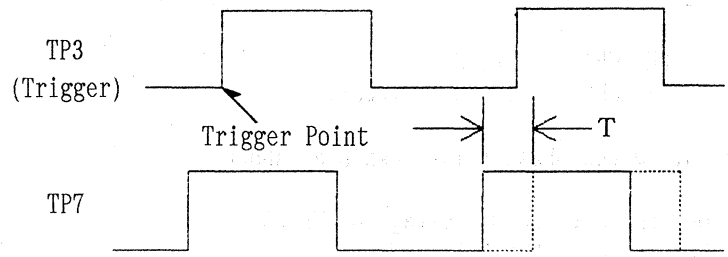 T = less than 6 μsec.
Step 3. 1. If it is not with in specification, readjust from beginning of this section (4-2 ~).	

4-29. CTL AMP CONFIRMATION (FOR AU-65 NTSC & PAL)

(W5 SERVO)

TEST POINT	MODE	TAPE USED	M.EQ.	INPUT SIGNAL	ADJUSTMENT
TP109 TP110	Time Code Insert Recording	BLANK TAPE	OSCILLOSCOPE	COMPONENT COLOR BAR	----------

Step 1. SCOPE CH1 : TP109 SCOPE CH2 : TP110 (Trigger) 1. Confirm that the V1 (Noise level) is less than 400mVp-p. 2. Confirm the phase relationship as shown. 3. Confirm that the DC voltage of TP109 (V2) is less than 2.5V (DC).	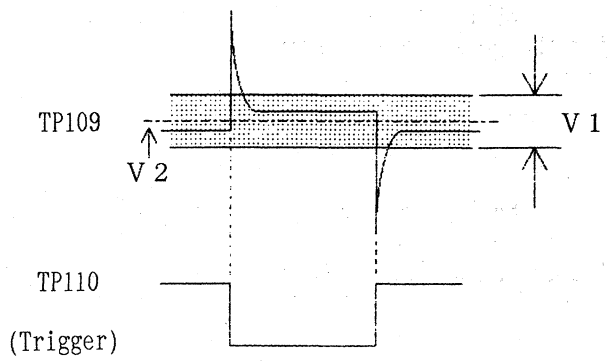

4-30. CTL AMP CONFIRMATION (FOR AU-62/63 NTSC & PAL)

(W5 SERVO)

TEST POINT	MODE	TAPE USED	M.EQ.	INPUT SIGNAL	ADJUSTMENT
TP109 TP110	PLAY	ALIGNMENT TAPE (COLOR BAR)	OSCILLOSCOPE	COMPONENT COLOR BAR	----------

Step 1. MACHINE CONDITION	Refer to Set Up Conditions at 4-14 Machine Condition Setting (2).
Step 2. SCOPE CH1 : TP109 SCOPE CH2 : TP110 (Trigger) 1. Confirm the phase relationship as shown. 2. Confirm that the DC voltage of TP109 (V2) is less than 2.5V (DC).	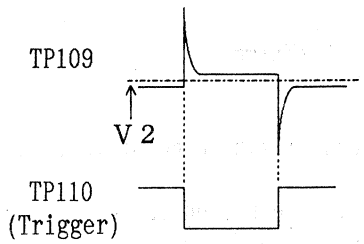

4-31. CTL-RECOVER CIRCUIT OPERATING CONFIRMATION (FOR AU-65/63/62 NTSC & PAL)

(W5 SERVO)

TEST POINT	MODE	TAPE USED	M.EQ.	INPUT SIGNAL	ADJUSTMENT
TP110 W5 Terminal R18B	SHTL ×1/2 -×1/2	ALIGNMENT TAPE	OSCILLOSCOPE	----------	----------

Step 1. MACHINE CONDITION	Refer to Set Up Conditions at 4-14 Machine Condition Setting (2).
Step 2. SCOPE CH1 : TP110 SCOPE CH2 : Terminal R18B (on W5 Board) 1. MODE : SHTL × 1/2 2. Confirm the phase relationship as shown.	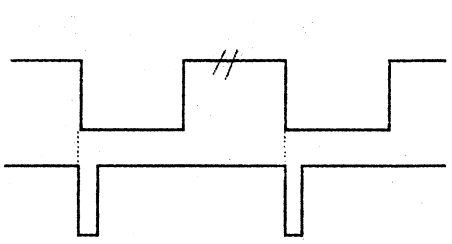
Step 3. 1. MODE : SHTL −× 1/2 2. Confirm the phase relationship as shown.	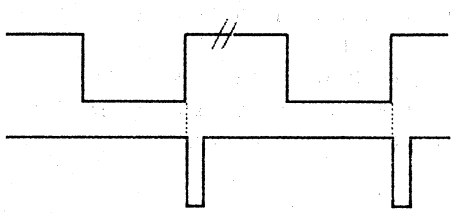

4-32-N. 50 PIN PARALLEL REMOTE CAPSTAN OVERRIDE SYNCRONIZATION ADJUSTMENT (NTSC)

(W5 SERVO)

TEST POINT	MODE	TAPE USED	M.EQ.	INPUT SIGNAL	ADJUSTMENT
TP115	PLAY	PRE-RECORDED TAPE	FREQUENCY COUNTER	----------	VR104 (CAP OVER) VR105

Note:
This adjustment is needed when AU-MK25 is installed with AU-65/63/62 NTSC model.

Step 1.

1. Connect a DC voltage to pin 46 of 50 Pin Remote Connector.
2. Set the DC voltage to 5.2V (DC).
3. FREQUENCY COUNTER : TP115
4. Adjust VR104 so that the frequency becomes 2158 ± 50Hz.
5. Set the DC voltage to 8.2V (DC).
6. Frequency Counter : TP115
7. Adjust VR105 so that the frequency becomes 2590 ± 100Hz.
8. Set the DC voltage to 2.2V (DC).
9. Frequency Counter : TP115
10. Confirm that the frequency becomes 1840 ± 100Hz.
11. If it is not, repeat from item 2 to item 10.

46 Pin (on 50 Pin)	TP115 (Frequency)	VR No.
2.2V (DC)	1840 ± 100Hz	CONFIRMATION
5.2V (DC)	2158 ± 50Hz	VR104
8.2V (DC)	2590 ± 100Hz	VR105

4-32-P. 50 PIN PARALLEL REMOTE CAPSTAN OVERRIDE SYNCRONIZATION ADJUSTMENT (PAL)

(W5 SERVO)

TEST POINT	MODE	TAPE USED	M.EQ.	INPUT SIGNAL	ADJUSTMENT
TP115	PLAY	PRE-RECORDED TAPE	FREQUENCY COUNTER	----------	VR104 (CAP OVER) VR105

Note:
This adjustment is needed when AU-MK25 is installed with AU-65/63/62 PAL model.

Step 1.

1. Connect a DC voltage to pin 46 of 50 Pin Remote Connector.
2. Set the DC voltage to 5.2V (DC).
3. FREQUENCY COUNTER : TP115
4. Adjust VR104 so that the frequency becomes 1800 ± 50Hz.
5. Set the DC voltage to 8.2V (DC).
6. Frequency Counter : TP115
7. Adjust VR105 so that the frequency becomes 2160 ± 100Hz.
8. Set the DC voltage to 2.2V (DC).
9. Frequency Counter : TP115
10. Confirm that the frequency becomes 1535 ± 100Hz.
11. If it is not, repeat from item 2 to item 10.

46 Pin (on 50 Pin)	TP115 (Frequency)	VR No.
2.2V (DC)	1535 ± 100Hz	CONFIRMATION
5.2V (DC)	1800 ± 50Hz	VR104
8.2V (DC)	2160 ± 100Hz	VR105

4-33. SWITCHING POWER SOURCE ADJUSTMENT (FOR AU-63 NTSC & PAL)

(AT POWER)

TEST POINT	MODE	TAPE USED	M.EQ.	INPUT SIGNAL	ADJUSTMENT
TP 5 TP 6	PLAY	BLANK TAPE	VOLTMETER	----------	VR 1

Note: This adjustment is AU-63 only.

SPEC :

TP 5 = +400V ± 10V ⊘ VR1

TP 6 = -400V ± 10V (CONFIRMATION)

4-34. OFFSET ADJUSTMENT (1) (FOR AU-63 NTSC & PAL)

(AT POWER)

TEST POINT	MODE	TAPE USED	M.EQ.	INPUT SIGNAL	ADJUSTMENT
TP 1	PLAY	-------	VOLTMETER	----------	VR 2

Note: This adjustment is AU-63 only.

1. Connect a jumper wire between TPG1 and TP9.
2. Adjust VR2 so that the voltage at TP1 is 0 ± 0.3V.
3. Disconnect the connected jumper wire.

TP1 = 0 ± 0.3V
(When TP9 and TPG1 are shorted.)

4-35. OFFSET ADJUSTMENT (2) (FOR AU-63 NTSC & PAL)

(AT POWER)

TEST POINT	MODE	TAPE USED	M.EQ.	INPUT SIGNAL	ADJUSTMENT
TP 2	PLAY	-------	VOLTMETER	----------	VR 3

Note: This adjustment is AU-63 only.

1. Connect a jumper wire between TPG1 and TP10.
2. Adjust VR3 so that the voltage at TP2 is 0 ± 0.3V.
3. Disconnect the connected jumper wire.

TP2 = 0 ± 0.3V
(When TP10 and TPG1 are shorted.)

4-36. MACHINE CONDITION SETTING (3) (FOR AU-63 AUTO TRACKING)

(W5 AT)

1. This adjustment procedure is required for machines equipped with Auto Tracking Function.

2. Confirm that the connector (P10) is connected to AT Power Board to supply the Auto Tracking voltage.

3. Before this AUTO TRACKING ADJ., the AT POWER BOARD should be adjusted (Refer to Section 4-33 ~ 4-35).

4. Before this AUTO TRACKING ADJ., the following adjustment should be completed.

   (1) Y Playback FM Carrier Level Adjustment (7-1)
   (2) Y Playback RF Level Adjustment (12-18)
   (3) C Playback FM Carrier Level Adjustment (7-2)
   (4) C Playback RF Level Adjustment (12-19)

4-37. CAPSTAN FG ADJUSTMENT (FOR AU-63 NTSC & PAL)

(W5 AT)

TEST POINT	MODE	TAPE USED	M.EQ.	INPUT SIGNAL	ADJUSTMENT
TP713 TP714	PLAY	ALIGNMENT TAPE (COLOR BAR)	OSCILLOSCOPE	----------	VR708 (CAP FG1 OFFSET) VR709 (CAP FG2 OFFSET)

Note: This adjustment is AU-63 only.

Step 1.

SCOPE CH1 : TP713
SCOPE CH2 : TP714

1. Confirm that the "A" level is more than 0.8Vp-p.

2. Adjust VR708 (for TP713) and VR709 (for TP714) so that the DC level "(B)" is 2.5 ± 0.2V (DC).

⊘ VR708
⊘ VR709

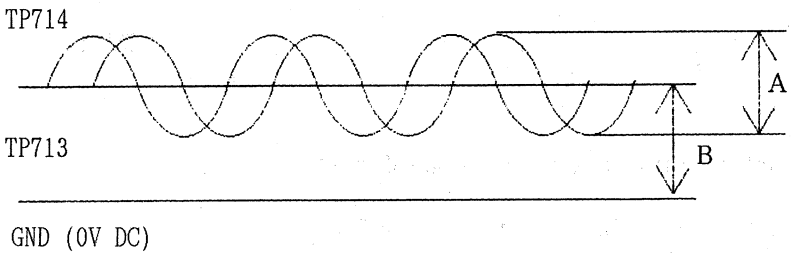

A = More than 0.8Vp-p
B = 2.5V ± 0.2V (DC)

4-38. CTL PHASE SHIFTER ADJUSTMENT (FOR AU-63 NTSC & PAL)

(W5 AT)

TEST POINT	MODE	TAPE USED	M.EQ.	INPUT SIGNAL	ADJUSTMENT
TP705 TP707	PLAY	ALIGNMENT TAPE (COLOR BAR)	OSCILLOSCOPE	----------	VR701 (MR SHIFTER)

Note: This adjustment is AU-63 only.

Step 1.
MACHINE CONDITION

Refer to Set Up Conditions at the beginning of this SECTION (AT - W5)
SW700 (AT TRACKING SW) : PRESET Side

Step 2.

SCOPE CH1 : TP705
SCOPE CH2 : TP707

1. Adjust VR701 so that the both waveforms are flat 0 ± 0.2V (DC).
2. After that confirm that the FRM LED (on W5 Board) is "OFF".
3. If it is not, readjust VR701 until the each condition is reached.

⊘ VR701

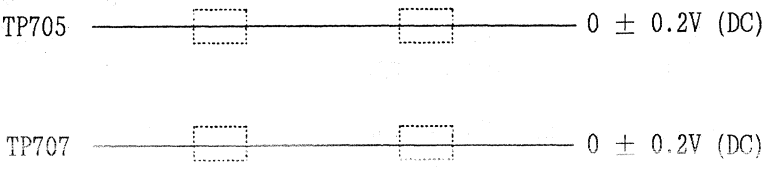

4-39. X-VALUE ADJUSTMENT (FOR AU-63 NTSC & PAL)

(W5 AT)

TEST POINT	MODE	TAPE USED	M.EQ.	INPUT SIGNAL	ADJUSTMENT
TP700 TP702	PLAY	ALIGNMENT TAPE (COLOR BAR)	OSCILLOSCOPE	----------	VR702 (AX) VR703 (BX)

Note: This adjustment is AU-63 only.

Step 1.
MACHINE CONDITION

Refer to Set Up Conditions at the beginning of this SECTION (AT - W5).
SW700 (AT TRACKING SW) : PRESET Side

Step 2.

SCOPE CH1 : TP700
SCOPE CH2 : TP702 (Trigger)

1. Turn VR702 and VR703 fully counterclockwise.
2. Adjust VR702 and then VR703 until they reach the 1st maximum position.

*Note:
Adjust to max. point, even if both channels are unequal.

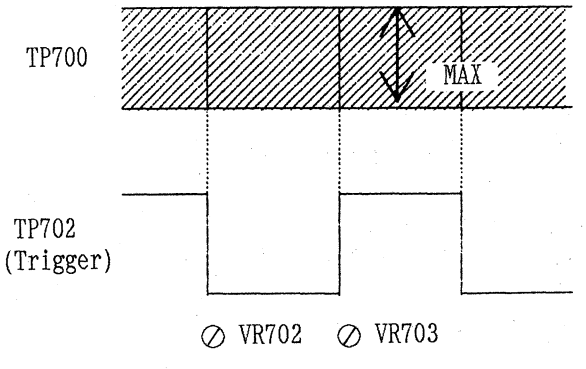

4-40. AT GAIN ADJUSTMENT (1) (FOR AU-63 NTSC & PAL)

(W5 AT)

TEST POINT	MODE	TAPE USED	M.EQ.	INPUT SIGNAL	ADJUSTMENT
TP700 TP702	VAR × 30/32	ALIGNMENT TAPE (COLOR BAR)	OSCILLOSCOPE	----------	VR705 (A COMP) VR707 (B COMP) VR704 (A GAIN) VR706 (B GAIN)

Note: This adjustment is AU-63 only.

Step 1.

MACHINE CONDITION

Refer to Set Up Conditionsat the beginning of this SECTION (AT - W5).
VR705 : Fully Counterclockwise
VR707 : Fully Counterclockwise
SW700 (AT TRACKING SW) : PRESET Side

Step 2.

SCOPE CH1 : TP700
SCOPE CH2 : TP702 (Trigger)

1. Adjust VR704 and VR706 so that the fluctuation of each channel is minimized as shown.

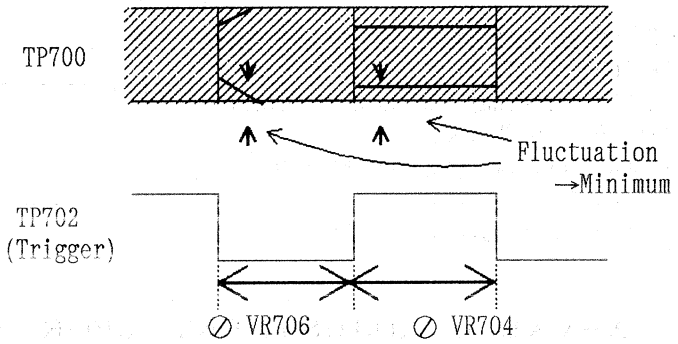

4-41. AT GAIN ADJUSTMENT (2) (FOR AU-63 NTSC & PAL)

(W5 AT)

TEST POINT	MODE	TAPE USED	M.EQ.	INPUT SIGNAL	ADJUSTMENT
TP700 TP702	VAR -×1	ALIGNMENT TAPE (COLOR BAR)	OSCILLOSCOPE	----------	VR705 (A COMP) VR707 (B COMP)

Note: This adjustment is AU-63 only.

Step 1.

MACHINE CONDITION

Refer to Set Up Conditons at the beginning of this SECTION (AT - W5).
SW700 (AT TRACKING SW) : PRESET Side

Step 2.

SCOPE CH1 : TP700
SCOPE CH2 : TP702 (Trigger)

1. Adjust VR705 and VR707 so that the fluctuation of each channel is minimized as shown.

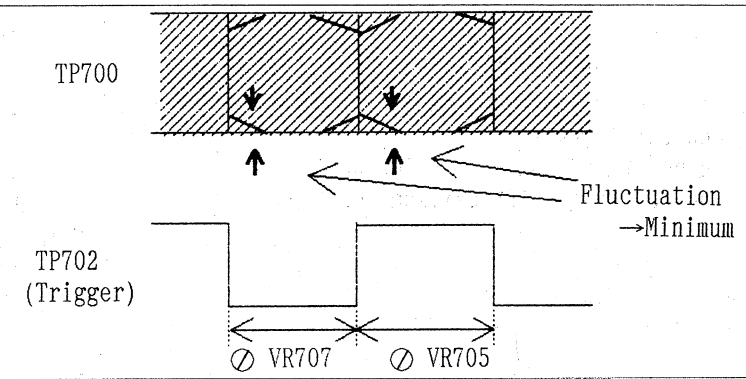

4-42. ENVELOPE INPUT LEVEL ADJUSTMENT (FOR AU-63 NTSC & PAL)

(W5 AT)

TEST POINT	MODE	TAPE USED	M.EQ.	INPUT SIGNAL	ADJUSTMENT
TP701	PLAY	ALIGNMENT TAPE (COLOR BAR)	OSCILLOSCOPE	----------	VR700 (RF LEVEL)

Note: This adjustment is AU-63 only. Step 1. MACHINE CONDITION	Refer to Set Up Conditions at the beginning of this SECTION (AT - W5). SW700 (AT TRACKING SW) : PRESET Side
Step 2. SCOPE CH1 : TP701 1. Adjust VR700 so that the DC voltage is 3.4 + 0/-0.2V (DC) as shown.	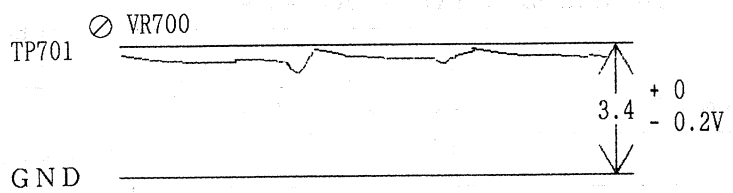

4-43. AUTO TRACKING CONFIRMATION (FOR AU-63 NTSC & PAL)

(W5 AT)

TEST POINT	MODE	TAPE USED	M.EQ.	INPUT SIGNAL	ADJUSTMENT
TP700 TP702	PLAY	ALIGNMENT TAPE	OSCILLOSCOPE	----------	VR702 (AX) VR703 (BX)

Note: This adjustment is AU-63 only. Step 1. MACHINE CONDITION	Refer to Set Up Conditions at the beginning of this SECTION (AT - W5). SW700 (AT TRACKING SW) : PRESET Side
Step 2. 1. SCOPE CH1 : TP700 SCOPE CH2 : TP702 (Trigger) 2. Adjust VR702 and VR703 so that the RF Level becomes 50% at TP700. 3. Set the SW700 (AT TRACKING SW) to "AUTO" side. 4. Confirm that the RF Level bevomes maximum automatically. 5. Set the SW700 to "PRESET" side again. 6. Readjust VR702 and VR703 so that the RF Level is maximized. 7. Finally, set the SW700 to "AUTO" side.	TP700 "PRESET" ↓ VR702 ↓ VR703 "AUTO" RF LEVEL 100% Automatically ↓ "PRESET" Readjust VR702 and VR703 ↓ so that the RF level is maximized. "AUTO"

5. AUDIO (W6) BOARD (1/2) — LINEAR AUDIO SECTION —

LINEAR AUDIO SECTION (W6) FLOWCHART FOR AU-65

* BEFORE ADJUSTMENT
  The adjustment with this comment is necessary to adjust after the following adjustments are completed.

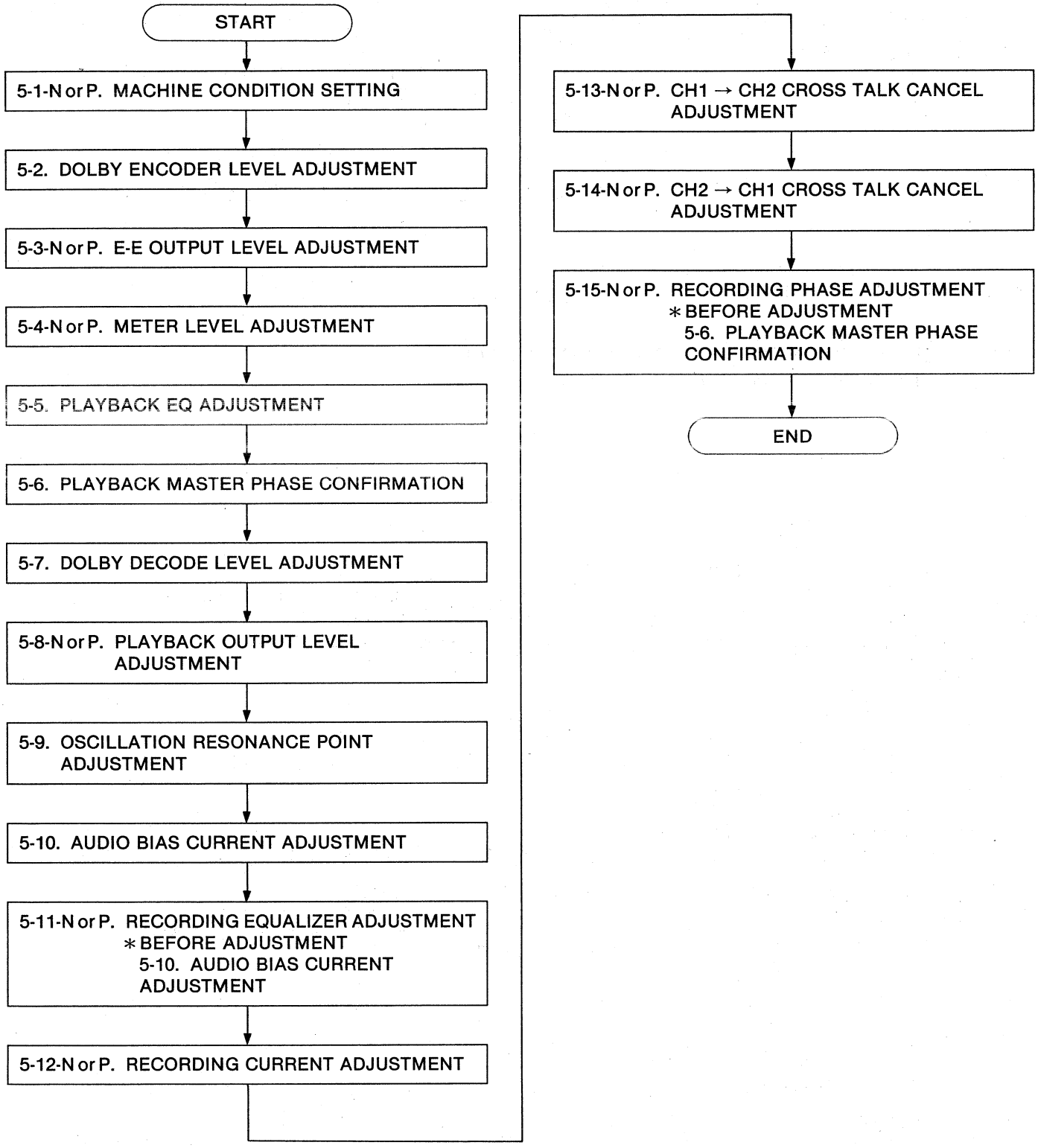

LINEAR AUDIO SECTION (W6) FLOWCHART FOR AU-63 AND AU-62

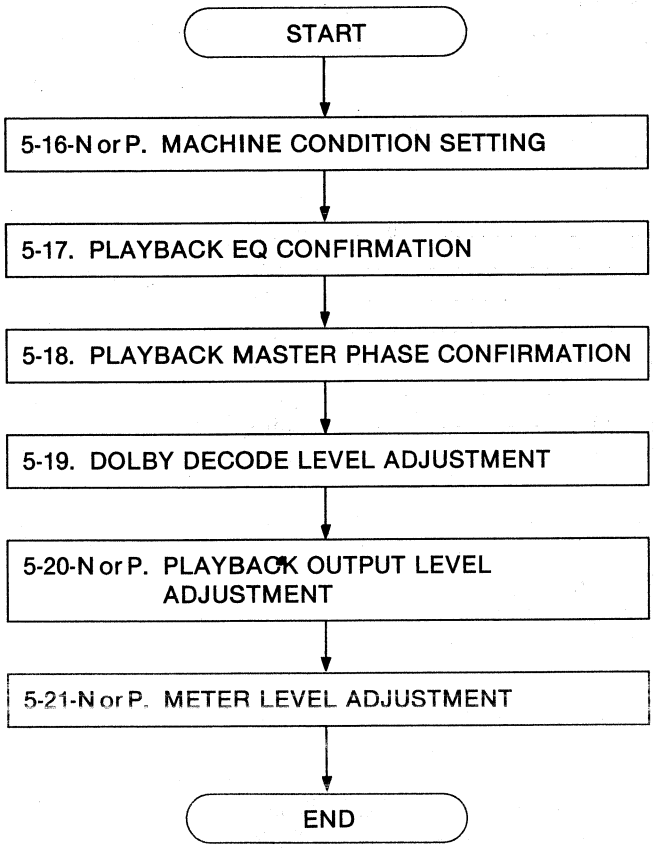

5. AUDIO (W6) BOARD (1/2)
— LINEAR AUDIO SECTION —

5-1-N. MACHINE CONDITION SETTING (FOR AU-65 NTSC LINEAR AUDIO)

Set the switches on the Front Panel as follows except special condition for NTSC VTR.

REC & PB VR	PRESET (PUSH)
METER SELECT	LINEAR
MODE	EE
HEAD SELECT	R/P
DOLBY	OFF
LIMITER	OFF
INPUT LEVEL SELECT (on the Audio I/O Board)	+4dBm
OUTPUT LEVEL SELECT (on the Audio I/O Board)	+4dBm

5-1-P. MACHINE CONDITION SETTING (FOR AU-65 PAL LINEAR AUDIO)

Set the switches on the Front Panel as follows except special condition for PAL VTR.

REC & PB VR	PRESET (PUSH)
METER SELECT	LINEAR
MODE	EE
HEAD SELECT	R/P
DOLBY	OFF
LIMITER	OFF
INPUT LEVEL SELECT (on the Audio I/O Board)	+0dBu
OUTPUT LEVEL SELECT (on the Audio I/O Board)	+0dBu

5-2. DOLBY ENCODER LEVEL ADJUSTMENT (FOR AU-65 NTSC & PAL)

(AUDIO VR BOARD)

TEST POINT	MODE	TAPE USED	M.EQ.	INPUT SIGNAL	ADJUSTMENT
TP101 (CH1) on W6 TP301 (CH2) on W6	EJECT	-------	VTVM	1KHz Sinewave Signal NTSC : +4dBm PAL : +0dBu	VR1 (CH1 DOLBY ENC) on AUDIO VR VR5 (CH2 DOLBY ENC) on AUDIO VR
Step 1. MACHINE CONDITION			Refer to Set Up Conditions at the beginning of this SECTION (AUDIO - W6 Machine Condition 5-1-N or 5-1-P).		
Step 2. VTVM : TP101 (CH1) TP301 (CH2)			⊘ VR1, 5 (on AUDIO VR P.C.Board) SPECIFICATION : -6dBm ± 0.2dB (387.5mVrms)		

5-3-N. E-E OUTPUT LEVEL ADJUSTMENT (FOR AU-65 NTSC)

(W6 AUDIO)

TEST POINT	MODE	TAPE USED	M.EQ.	INPUT SIGNAL	ADJUSTMENT
CH1 LINE OUT CH2 LINE OUT	EJECT	-------	VTVM	1KHz Sinewave Signal +4dBm.	VR101 (CH1 E-E OUT) VR301 (CH2 E-E OUT)
Step 1. MACHINE CONDITION			Refer to Set Up Conditions at the beginning of this SECTION (AUDIO - W6 Machine Condition 5-1-N).		
Step 2. VTVM : CH1 LINE OUT CH2 LINE OUT			⊘ VR101, 301 SPECIFICATION : +4dBm ± 0.2dB		

5-3-P. E-E OUTPUT LEVEL ADJUSTMENT (FOR AU-65 PAL)

(W6 AUDIO)

TEST POINT	MODE	TAPE USED	M.EQ.	INPUT SIGNAL	ADJUSTMENT
CH1 LINE OUT CH2 LINE OUT	EJECT	-------	VTVM	1KHz Sinewave Signal 0dBu.	VR101 (CH1 E-E OUT) VR301 (CH2 E-E OUT)
Step 1. MACHINE CONDITION			Refer to Set Up Conditions at the beginning of this SECTION (AUDIO - W6 Machine Condition 5-1-P).		
Step 2. VTVM : CH1 LINE OUT CH2 LINE OUT			⊘ VR101, 301 SPECIFICATION : 0dBu ± 0.2dB		

5-4-N. METER LEVEL ADJUSTMENT (FOR AU-65 NTSC)

(FRONT I/F BOARD)

TEST POINT	MODE	TAPE USED	M.EQ.	INPUT SIGNAL	ADJUSTMENT
CH1 METER CH2 METER	EJECT	-------	-------	1KHz Sinewave Signal +4dBm.	VR101 (CH1 METER) on Front Interface VR102 (CH2 METER) on Front Interface
Step 1. MACHINE CONDITION			Refer to Set Up Conditions at the beginning of this SECTION (AUDIO - W6 Machine Condition 5-1-N).		
Step 2. 1.. Adjust VR101 (CH1) and VR102 (CH2) on the Front Interface Board so that the meter indicates "0" VU as shown.			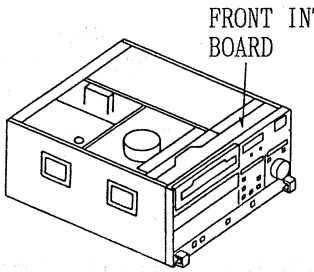 ⊘ VR101 ⊘ VR102 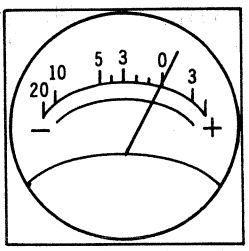		

5-4-P. METER LEVEL ADJUSTMENT (FOR AU-65 PAL)

(FRONT I/F BOARD)

TEST POINT	MODE	TAPE USED	M.EQ.	INPUT SIGNAL	ADJUSTMENT
CH1 METER CH2 METER	EJECT	-------	-------	1KHz Sinewave Signal 0dBu.	VR101 (CH1 METER) on Front Interface VR102 (CH2 METER) on Front Interface
Step 1. MACHINE CONDITION			Refer to Set Up Conditions at the beginning of this SECTION (AUDIO - W6 Machine Condition 5-1-P).		
Step 2. 1. Adjust VR101 (CH1) and VR102 (CH2) on the Front Interface Board so that the meter indicates "-4" VU as shown.			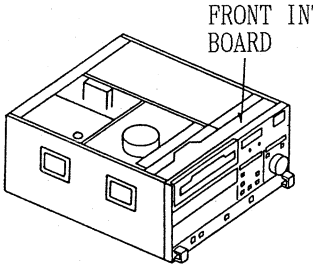 ⊘ VR101 ⊘ VR102 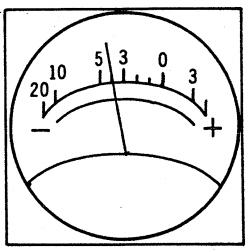		

5-5. PLAYBACK EQ ADJUSTMENT (FOR AU-65 NTSC & PAL)

(W6 AUDIO)

TEST POINT	MODE	TAPE USED	M.EQ.	INPUT SIGNAL	ADJUSTMENT
CH1 LINE OUT CH2 LINE OUT	PLAY	ALIGNMENT TAPE F. RESPONSE ADJ. PORTION	VTVM	----------	SW101 (CH1 PB EQ) SW301 (CH2 PB EQ)

Step 1. MACHINE CONDITION	Refer to Set Up Conditions at the beginning of this SECTION (AUDIO - W6 Machine Condition 5-1-N or 5-1-P).
Step 2. 1. Play back the Frequency Response portion of the Alignment Tape. 2. Confirm that the specification as shown. 3. If it is not within specification, adjust SW101 (CH1) and SW301 (CH2). 4. Repeat Item 1, 2, 3 until the specification is met.	⊘ SW101, 301 SPECIFICATION : 1KHz ~ 7.5KHz = ± 1dB 7.5KHz ~ 15KHz = +1.5dB (1KHz Reference) −2.5dB

5-6. PLAYBACK MASTER PHASE CONFIRMATION (FOR AU-65 NTSC & PAL)

(W6 AUDIO)

TEST POINT	MODE	TAPE USED	M.EQ.	INPUT SIGNAL	ADJUSTMENT
CH1 LINE OUT CH2 LINE OUT	PLAY	ALIGNMENT TAPE 15KHz PORTION	OSCILLOSCOPE	----------	A/C HEAD AZIMUTH ADJUSTMENT (MECHANICAL)

Step 1. MACHINE CONDITION	1. Refer to Set Up Conditions at the beginning of this SECTION (AUDIO - W6 Machine Condition 5-1-N or 5-4-P). 2. The PLAYBACK EQ ADJ. (5-5) should be completed.
Step 2. SCOPE CH1 : CH1 LINE OUT SCOPE CH2 : CH2 LINE OUT 1. Play back the 15KHz portion of the Alignment Tape. 2. Confirm that the phase difference is 0 ± 2.8μsec (±15°). 3. If it is not, readjust the A/C Head Azimuth Mechanically (See Mech. Adj. Section). 4. After this adjustment is finished, readjust the PB EQ ADJ. (5-5).	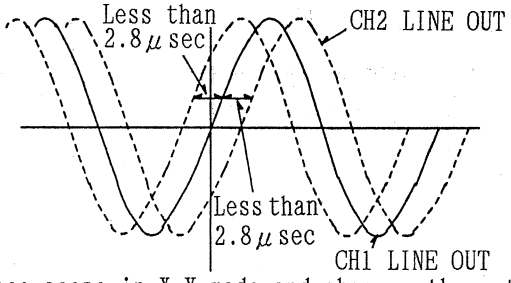 or Place scope in X-Y mode and observe the pattern. Confirm both circles are in phase. 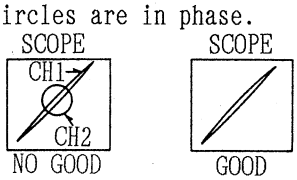

5-7. DOLBY DECODE LEVEL ADJUSTMENT (FOR AU-65 NTSC & PAL)

(W6 AUDIO)

TEST POINT	MODE	TAPE USED	M.EQ.	INPUT SIGNAL	ADJUSTMENT
TP101 (CH1) TP301 (CH2)	PLAY	ALIGNMENT TAPE 1KHz 0VU PORTION	VTVM	----------	VR103 (CH1 PB GAIN) VR303 (CH2 PB GAIN)
Step 1. MACHINE CONDITION			Refer to Set Up Conditions at the beginning of this SECTION (AUDIO - W6 Machine Condition 5-1-N or 5-1-P).		
Step 2. VTVM : TP101 (CH1) TP301 (CH2)			⊘ VR103, VR303 SPECIFICATION : -6dBm ± 0.2dB (387.5mVrms)		

5-8-N. PLAYBACK OUTPUT LEVEL ADJUSTMENT (FOR AU-65 NTSC)

(AUDIO VR BOARD)

TEST POINT	MODE	TAPE USED	M.EQ.	INPUT SIGNAL	ADJUSTMENT
CH1 LINE OUT CH2 LINE OUT	PLAY	ALIGNMENT TAPE 1KHz 0VU PORTION	VTVM	----------	VR3 (CH1 PB OUT) on Audio VR VR7 (CH2 PB OUT) on Audio VR
Step 1. MACHINE CONDITION			Refer to Set Up Conditions at the beginning of this SECTION (AUDIO - W6 Machine Condition 5-1-N).		
Step 2. VTVM : CH1 LINE OUT CH2 LINE OUT 1. Adjust VR3 and VR7 on the Audio VR Board so that the output level is +4dBm ± 0.2dBm.			⊘ VR3, 7 SPECIFICATION : +4dBm ± 0.2dB.		

5-8-P. PLAYBACK OUTPUT LEVEL ADJUSTMENT (FOR AU-65 PAL)

(AUDIO VR BOARD)

TEST POINT	MODE	TAPE USED	M.EQ.	INPUT SIGNAL	ADJUSTMENT
CH1 LINE OUT CH2 LINE OUT	PLAY	ALIGNMENT TAPE 1KHz 0VU PORTION	VTVM	----------	VR3 (CH1 PB OUT) on Audio VR VR7 (CH2 PB OUT) on Audio VR
Step 1. MACHINE CONDITION			Refer to Set Up Conditions at the beginning of this SECTION (AUDIO - W6 Machine Condition 5-1-P).		
Step 2. VTVM : CH1 LINE OUT CH2 LINE OUT 1. Adjust VR3 and VR7 on the Audio VR Board so that the output level is +0dBu ± 0.2dBu.			⊘ VR3, 7 SPECIFICATION : +0dBu ± 0.2dB.		

5-9. OSCILLATION RESONANCE POINT ADJUSTMENT (FOR AU-65 NTSC & PAL)

(W6 AUDIO)

TEST POINT	MODE	TAPE USED	M.EQ.	INPUT SIGNAL	ADJUSTMENT
HOT : TP551 TP552 TP553 TP554 TP555 TP556 TP557 TP558 GND : TPG551	REC	BLANK TAPE	OSCILLOSCOPE	----------	T551 (CH1 BIAS) T552 (CH2 BIAS) T553 (CH1 ERASE) T554 (CH2 ERASE) T555 (TC BIAS) T556 (TC ERASE) T557 (CTL ERASE) T558 (FULL ERASE)
Step 1. MACHINE CONDITION			Refer to Set Up Conditions at the beginning of this SECTION (AUDIO - W6 Machine Condition 5-1-N or 5-1-P).		
Step 2. SCOPE : The Connect & adjust for each Test Point. 1. Adjust the each coils so that the "A" point of the waveform is in the center between "B" and "C".			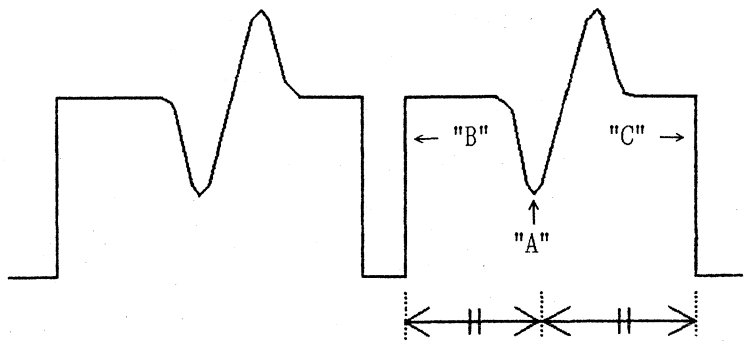		

5-10. AUDIO BIAS CURRENT ADJUSTMENT (FOR AU-65 NTSC & PAL)

(W6 AUDIO)

TEST POINT	MODE	TAPE USED	M.EQ.	INPUT SIGNAL	ADJUSTMENT
CH1 LINE OUT CH2 LINE OUT	SELF REC/PB	BLANK TAPE	VTVM	10KHz Sinewave Signal NTSC : +4dBm PAL : +0dBu	VR551 (CH1 BIAS CURR.) VR552 (CH2 BIAS CURR.)

Step 1. MACHINE CONDITION	Refer to Set Up Conditions at the beginning of this SECTION (AUDIO - W6 Machine Condition 5-1-N or 5-1-P).
Step 2. 1. Place the unit in the recording mode. 2. Turn VR551 (CH1) from fully clockwise position to fully counterclockwise position slowly while in the recording. 3. VTVM : CH1 LINE OUT 4. Play back the just recorded portion. 5. Find the audio peak level and notate it. 6. Set VR551 around its center position. 7. Make a recording then, Playback that portion. 8. Confirm that the audio output level is -2.5dB ± 0.5dB (Bias Saturation point) from the Audio Peak Level. 9. If it is not, repeat from Item 6 to 8 until the Audio Bias is -2.5dB ± 0.5dB from the Audio Peak Level. Note : CH2 AUDIO BIAS CURR. ADJ. procedure is same as CH1.	⊘ VR551 ⊘ VR552 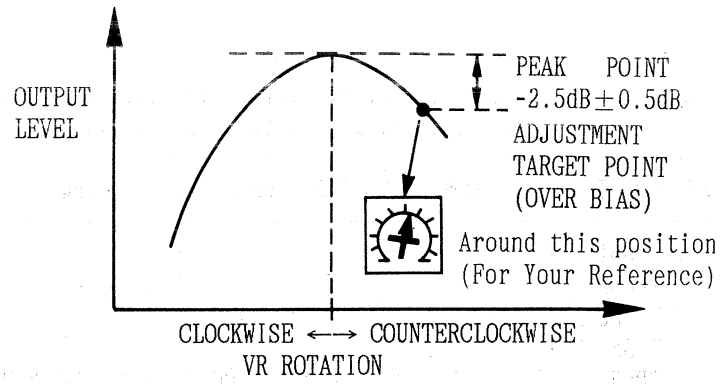

5-11-N. RECORDING EQUALIZER ADJUSTMENT (FOR AU-65 NTSC)

(W6 AUDIO)

TEST POINT	MODE	TAPE USED	M.EQ.	INPUT SIGNAL	ADJUSTMENT
CH1 LINE OUT CH2 LINE OUT	SELF REC/PB	BLANK TAPE	VTVM	1KHz ~ 15KHz Sinewave Signal -6dBm	VR203 (CH1 REC EQ1) SW201 VR403 (CH2 REC EQ1) SW401

Step 1. MACHINE CONDITION	1. Refer to Set Up Conditions at the beginning of this SECTION (AUDIO - W6 Machine Condition 5-1-N). 2. The Audio Bias Current Adjustment (Section 5-10) should be completed.
Step 2. 1. Supply a 1KHz sinewave signal at -6dBm (387.5 mVrms) to CH1 and CH2 inputs. 2. Insert a work cassette and place the unit in the recording mode. 3. During recording mode, change the Audio Frequency from 1KHz to 7.5KHz, 12.5KHz and 15KHz. 4. Play back the just recorded portion and confirm that the output level is within the specification as shown. 5. If it is not, adjust VR203 and SW201. 6. Repeat from Item 3 to 4 until the output level is in specification. Note : VR203 (VR403) : CH1 REC EQ (CH2 REC EQ) SW201 (SW401) : CH1 REC EQ (CH2 REC EQ) 1. CH2 REC EQ ADJ. procedure is same as CH1.	⊘ VR203 ⊘ VR403 SW201 SW401 SPECIFICATION : 1KHz ~ 7.5KHz = ± 1dB 7.5KHz ~ 15KHz = +1.5/-2.5dB (1KHz Reference)

5-11-P. RECORDING EQUALIZER ADJUSTMENT (FOR AU-65 PAL)

(W6 AUDIO)

TEST POINT	MODE	TAPE USED	M.EQ.	INPUT SIGNAL	ADJUSTMENT
CH1 LINE OUT CH2 LINE OUT	SELF REC/PB	BLANK TAPE	VTVM	1KHz ~ 15KHz Sinewave Signal -10dBu	VR203 (CH1 REC EQ1) SW201 VR403 (CH2 REC EQ1) SW401

Step 1. MACHINE CONDITION	1. Refer to Set Up Conditions at the beginning of this SECTION (AUDIO - W6 Machine Condition 5-1-P). 2. The Audio Bias Current Adjustment (Section 5-10) should be completed.
Step 2. 1. Supply a 1KHz sinewave signal at -10dBu to CH1 and CH2 inputs. 2. Insert a work cassette and place the unit in the recording mode. 3. During recording mode, change the Audio Frequency from 1KHz to 7.5KHz, 12.5KHz and 15KHz. 4. Play back the just recorded portion and confirm that the output level is within the specification as shown. 5. If it is not, adjust VR203 and SW201. 6. Repeat from Item 3 to 4 until the output level is in specification. Note : VR203 (VR403) : CH1 REC EQ (CH2 REC EQ) SW201 (SW401) : CH1 REC EQ (CH2 REC EQ) 1. CH2 REC EQ ADJ. procedure is same as CH1.	⊘ VR203 ⊘ VR403 SW201 SW401 SPECIFICATION : 1KHz ~ 7.5KHz = ± 1dB 7.5KHz ~ 15KHz = +1.5/-2.5dB (1KHz Reference)

5-12-N. RECORDING CURRENT ADJUSTMENT (FOR AU-65 NTSC)

(W6 AUDIO)

TEST POINT	MODE	TAPE USED	M.EQ.	INPUT SIGNAL	ADJUSTMENT
CH1 LINE OUT CH2 LINE OUT	SELF REC/PB	BLANK TAPE	VTVM	1KHz Sinewave Signal +4dBm	VR202 (CH1 REC CURR.) VR402 (CH2 REC CURR.)

Step 1. MACHINE CONDITION	Refer to Set Up Conditions at the beginning of this SECTION (AUDIO - W6 Machine Condition 5-1-N).
Step 2. 1. VTVM : CH1 LINE OUT CH2 LINE OUT 2. Make a recording. 3. Play back the just recorded portion, and confirm that the output level is +4dBm ± 0.2dBm at CH1 and CH2 outputs.	4. If it is not, adjust VR202 (VR402). 5. Repeat the Item 2 and 3 until the output level is +4dBm ± 0.2dB.

5-12-P. RECORDING CURRENT ADJUSTMENT (FOR AU-65 PAL)

(W6 AUDIO)

TEST POINT	MODE	TAPE USED	M.EQ.	INPUT SIGNAL	ADJUSTMENT
CH1 LINE OUT CH2 LINE OUT	SELF REC/PB	BLANK TAPE	VTVM	1KHz Sinewave Signal +0dBu	VR202 (CH1 REC CURR.) VR402 (CH2 REC CURR.)

Step 1. MACHINE CONDITION	Refer to Set Up Conditions at the beginning of this SECTION (AUDIO - W6 Machine Condition 5-1-P).
Step 2. 1. VTVM : CH1 LINE OUT CH2 LINE OUT 2. Make a recording. 3. Play back the just recorded portion, and confirm that the output level is +0dBu ± 0.2dBu at CH1 and CH2 outputs.	4. If it is not, adjust VR202 (VR402). 5. Repeat the Item 2 and 3 until the output level is +0dBu ± 0.2dB.

5-13-N. CH1 → CH2 CROSS TALK CANCEL ADJUSTMENT (FOR AU-65 NTSC)

(W6 AUDIO)

TEST POINT	MODE	TAPE USED	M.EQ.	INPUT SIGNAL	ADJUSTMENT
CH2 LINE OUT	CH1 INSERT	Cassette Shell (Without Tape)	VTVM	1KHz & 9KHz Sinewave Signal +4dBm	VR205 (CH1 HIGH CTC) VR206 (CH1 CTC LEVEL)

Step 1. MACHINE CONDITION	Refer to Set Up Conditions at the beginning of this SECTION (AUDIO - W6 Machine Condition 5-1-N). *Tape sides of Cassette Shell where end of tape detection occurs.
Step 2. 1. VTVM : CH2 LINE OUT 2. Supply a 1KHz sinewave signal at +4dBm to CH1 and CH2 Input. 3. Place the unit in the CH1 INSERT mode. 4. Confirm that the CH2 Audio Output Level is Less than -21dBm. 5. If it is not, adjust VR205 so that the CH2 Audio Output Level is less than -21dBm at CH2 LINE OUT.	Step 3. 1. VTVM : CH2 LINE OUT 2. Supply a 9KHz sinewave signal at +4dBm to CH1 and CH2 Input. 3. Place the unit in the CH1 INSERT mode. 4. Confirm that the CH2 Audio Output Level is Less than -21dBm. 5. If it is not, adjust VR206 so that the CH2 Audio Output Level is less than -21dBm at CH2 LINE OUT.

5-13-P. CH1 → CH2 CROSS TALK CANCEL ADJUSTMENT (FOR AU-65 PAL)

(W6 AUDIO)

TEST POINT	MODE	TAPE USED	M.EQ.	INPUT SIGNAL	ADJUSTMENT
CH2 LINE OUT	CH1 INSERT	Cassette Shell (Without Tape)	VTVM	1KHz & 9KHz Sinewave Signal +0dBu	VR205 (CH1 HIGH CTC) VR206 (CH1 CTC LEVEL)

Step 1. MACHINE CONDITION	Refer to Set Up Conditions at the beginning of this SECTION (AUDIO - W6 Machine Condition 5-1-P). *Tape sides of Cassette Shell where end of tape detection occurs.
Step 2. 1. VTVM : CH2 LINE OUT 2. Supply a 1KHz sinewave signal at +0dBu to CH1 and CH2 Input. 3. Place the unit in the CH1 INSERT mode. 4. Confirm that the CH2 Audio Output Level is Less than -25dBu. 5. If it is not, adjust VR205 so that the CH2 Audio Output Level is less than -25dBu at CH2 LINE OUT.	Step 3. 1. VTVM : CH2 LINE OUT 2. Supply a 9KHz sinewave signal at +0dBu to CH1 and CH2 Input. 3. Place the unit in the CH1 INSERT mode. 4. Confirm that the CH2 Audio Output Level is Less than -25dBu. 5. If it is not, adjust VR206 so that the CH2 Audio Output Level is less than -25dBu at CH2 LINE OUT.

5-14-N. CH2 → CH1 CROSS TALK CANCEL ADJUSTMENT (FOR AU-65 NTSC)

(W6 AUDIO)

TEST POINT	MODE	TAPE USED	M.EQ.	INPUT SIGNAL	ADJUSTMENT
CH1 LINE OUT	CH2 INSERT	BLANK TAPE (Without Tape)	VTVM	1KHz & 9KHz Sinewave Signal +4dBm	VR405 (CH2 HIGH CTC) VR406 (CH2 CTC LEVEL)

Step 1. MACHINE CONDITION	Refer to Set Up Conditions at the beginning of this SECTION (AUDIO - W6 Machine Condition 5-1-N). *Tape sides of Cassette Shell where end of tape detection occurs.
Step 2. 1. VTVM : CH1 LINE OUT 2. Supply a 1KHz sinewave signal at +4dBm to CH1 and CH2 Input. 3. Place the unit in the CH2 INSERT mode. 4. Confirm that the CH1 Audio Output Level is Less than -21dBm. 5. If it is not, adjust VR405 so that the CH1 Audio Output Level is less than -21dBm at CH1 LINE OUT.	Step 3. 1. VTVM : CH1 LINE OUT 2. Supply a 9KHz sinewave signal at +4dBm to CH1 and CH2 Input. 3. Place the unit in the CH2 INSERT mode. 4. Confirm that the CH1 Audio Output Level is Less than -21dBm. 5. If it is not, adjust VR406 so that the CH1 Audio Output Level is less than -21dBm at CH1 LINE OUT.

5-14-P. CH2 → CH1 CROSS TALK CANCEL ADJUSTMENT (FOR AU-65 PAL)

(W6 AUDIO)

TEST POINT	MODE	TAPE USED	M.EQ.	INPUT SIGNAL	ADJUSTMENT
CH1 LINE OUT	CH2 INSERT	BLANK TAPE (Without Tape)	VTVM	1KHz & 9KHz Sinewave Signal +0dBu	VR405 (CH2 HIGH CTC) VR406 (CH2 CTC LEVEL)

Step 1. MACHINE CONDITION	Refer to Set Up Conditions at the beginning of this SECTION (AUDIO - W6 Machine Condition 5-1-P). *Tape sides of Cassette Shell where end of tape detection occurs.
Step 2. 1. VTVM : CH1 LINE OUT 2. Supply a 1KHz sinewave signal at +0dBu to CH1 and CH2 Input. 3. Place the unit in the CH2 INSERT mode. 4. Confirm that the CH1 Audio Output Level is Less than -25dBu. 5. If it is not, adjust VR405 so that the CH1 Audio Output Level is less than -25dBu at CH1 LINE OUT.	Step 3. 1. VTVM : CH1 LINE OUT 2. Supply a 9KHz sinewave signal at +0dBu to CH1 and CH2 Input. 3. Place the unit in the CH2 INSERT mode. 4. Confirm that the CH1 Audio Output Level is Less than -25dBu. 5. If it is not, adjust VR406 so that the CH1 Audio Output Level is less than -25dBu at CH1 LINE OUT.

5-15-N. RECORDING PHASE ADJUSTMENT (FOR AU-65 NTSC)

(W6 AUDIO)

TEST POINT	MODE	TAPE USED	M.EQ.	INPUT SIGNAL	ADJUSTMENT
CH1 LINE OUT CH2 LINE OUT	SELF REC/PB	BLANK TAPE	OSCILLOSCOPE	15KHz Sinewave Signal +4dBm	VR201 (REC P. S.)

Step 1. MACHINE CONDITION	1. Refer to Set Up Conditions at the beginning of this SECTION (AUDIO - W6 Machine Condition 5-1-N). 2. The PLAYBACK MASTER PHASE ADJ. (5-6) should be completed before this adjustment is done.
Step 2. 1. SCOPE CH1 : CH1 LINE OUT SCOPE CH2 : CH2 LINE OUT 2. Make a recording. 3. Play back the just recorded portion. 4. Confirm that the phase difference is 0 ± 3.7μsec (±20°). 5. If it is not, adjust VR201 and repeat from Item 2 to Item 4 until the phase difference becomes 0 ± 3.7μsec (±20°).	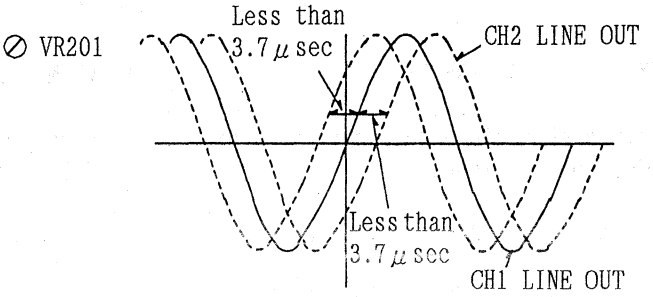 or Place scope in X-Y mode and observe the pattern. Confirm both circles are in phase. 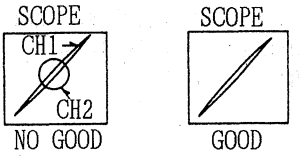

5-15-P. RECORDING PHASE ADJUSTMENT (FOR AU-65 PAL)

(W6 AUDIO)

TEST POINT	MODE	TAPE USED	M.EQ.	INPUT SIGNAL	ADJUSTMENT
CH1 LINE OUT CH2 LINE OUT	SELF REC/PB	BLANK TAPE	OSCILLOSCOPE	15KHz Sinewave Signal +0dBu	VR201 (REC P. S.)

Step 1.

MACHINE CONDITION

1. Refer to Set Up Conditions at the beginning of this SECTION (AUDIO - W6 Machine Condition 5-1-P).
2. The PLAYBACK MASTER PHASE ADJ. (5-6) should be completed before this adjustment is done.

Step 2.

1. SCOPE CH1 : CH1 LINE OUT
   SCOPE CH2 : CH2 LINE OUT
2. Make a recording.
3. Play back the just recorded portion.
4. Confirm that the phase difference is 0 ± 3.7μsec (±20°).
5. If it is not, adjust VR201 and repeat from Item 2 to Item 4 until the phase difference becomes 0 ± 3.7μsec (±20°).

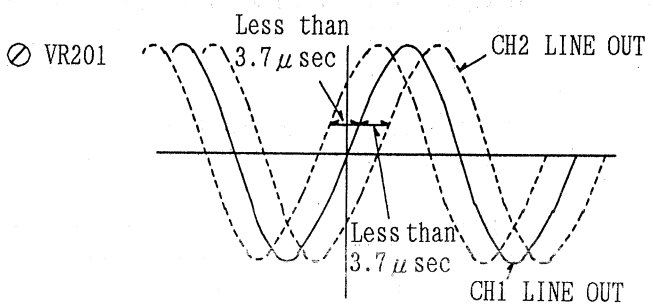

or Place scope in X-Y mode and observe the pattern. Confirm both circles are in phase.

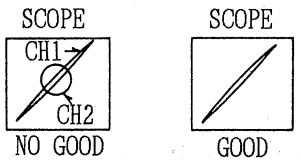

5-16-P. MACHINE CONDITION SETTING (FOR AU-63/62 PAL LINEAR AUDIO)

Set the switches on the Front Panel as follows except special condition for PAL VTR.

PB VR	PRESET (PUSH)
METER SELECT	LINEAR
DOLBY	OFF
OUTPUT LEVEL SELECT (on the Audio I/O Board)	+0dBu

5-16-N. MACHINE CONDITION SETTING (FOR AU-63/62 NTSC LINEAR AUDIO)

Set the switches on the Front Panel as follows except special condition for NTSC VTR.

PB VR	PRESET (PUSH)
METER SELECT	LINEAR
DOLBY	OFF
OUTPUT LEVEL SELECT (on the Audio I/O Board)	+4dBm

5-17. PLAYBACK EQ CONFIRMATION (FOR AU-62/63 NTSC & PAL)

(W6 AUDIO)

TEST POINT	MODE	TAPE USED	M.EQ.	INPUT SIGNAL	ADJUSTMENT
CH1 LINE OUT CH2 LINE OUT	PLAY	ALIGNMENT TAPE F. RESPONSE ADJ. PORTION	VTVM	----------	----------
Step 1. MACHINE CONDITION			Refer to Set Up Conditions at 5-16-N or 5-16-P Machine Condition Setting (for AU-63/62).		
Step 2. 1. Play back the Frequency Response portion of the Alignment Tape. 2. Confirm that the specification is met.			SPECIFICATION : 1KHz ~ 7.5KHz = ± 1dB 7.5KHz ~ 15KHz = +1.5dB -2.5dB (1KHz Reference)		

5-18. PLAYBACK MASTER PHASE CONFIRMATION (FOR AU-62/63 NTSC & PAL)

(W6 AUDIO)

TEST POINT	MODE	TAPE USED	M.EQ.	INPUT SIGNAL	ADJUSTMENT
CH1 LINE OUT CH2 LINE OUT	PLAY	ALIGNMENT TAPE 15KHz PORTION	OSCILLOSCOPE	----------	A/C HEAD AZIMUTH ADJUSTMENT (MECHANICAL)

Step 1. MACHINE CONDITION	1. Refer to Set Up Conditions at 5-16-N or 5-16-P Machine Condition Setting (for AU-63/62). 2. The PLAYBACK EQ CONFIRMATION (5-17) should be completed.
Step 2. SCOPE CH1 : CH1 LINE OUT SCOPE CH2 : CH2 LINE OUT 1. Play back the 15KHz portion of the Alignment Tape. 2. Confirm that the phase difference is 0 ± 2.8μsec (±15°). 3. If it is not, readjust the A/C Head Azimuth Mechanically (See Mech. Adj. Section). 4. After this adjustment is finished, reconfirm the PB EQ CONFIRMATION (5-17).	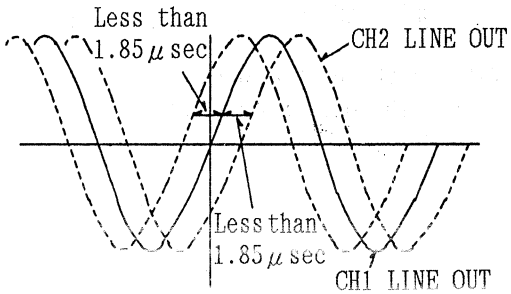 or Place scope in X-Y mode and observe the pattern. Confirm both circles are in phase. 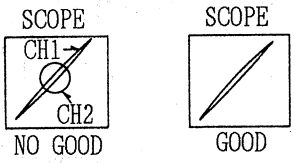

5-19. DOLBY DECODE LEVEL ADJUSTMENT (FOR AU-62/63 NTSC & PAL)

(W6 AUDIO)

TEST POINT	MODE	TAPE USED	M.EQ.	INPUT SIGNAL	ADJUSTMENT
TP101 (CH1) TP301 (CH2)	PLAY	ALIGNMENT TAPE 1KHz 0VU PORTION	VTVM	----------	VR103 (CH1 PB GAIN) VR303 (CH2 PB GAIN)

Step 1. MACHINE CONDITION	Refer to Set Up Conditions at 5-16-N or 5-16-P Machine Condition Setting (for AU-63/62).
Step 2. VTVM : TP101 (CH1) TP301 (CH2)	⊘ VR103, VR303 SPECIFICATION : -6dBm ± 0.2dB (387.5mVrms)

5-20-N. PLAYBACK OUTPUT LEVEL ADJUSTMENT (FOR AU-62/63 NTSC)

(W6 AUDIO)

TEST POINT	MODE	TAPE USED	M.EQ.	INPUT SIGNAL	ADJUSTMENT
CH1 LINE OUT CH2 LINE OUT	PLAY	ALIGNMENT TAPE 1KHz 0VU PORTION	VTVM	----------	VR3 (CH1 PB OUT) on Audio VR VR7 (CH2 PB OUT) on Audio VR
Step 1. MACHINE CONDITION			Refer to Set Up Conditions at 5-16-N Machine Condition Setting (for AU-63/62).		
Step 2. VTVM : CH1 LINE OUT CH2 LINE OUT 1. Adjust VR3 and VR7 on the Audio VR Board so that the output level is +4dBm ± 0.2dB.			⊘ VR3, 7 SPECIFICATION : +4dBm ± 0.2dB.		

5-20-P. PLAYBACK OUTPUT LEVEL ADJUSTMENT (FOR AU-62/63 PAL)

(W6 AUDIO)

TEST POINT	MODE	TAPE USED	M.EQ.	INPUT SIGNAL	ADJUSTMENT
CH1 LINE OUT CH2 LINE OUT	PLAY	ALIGNMENT TAPE 1KHz 0VU PORTION	VTVM	----------	VR3 (CH1 PB OUT) on Audio VR VR7 (CH2 PB OUT) on Audio VR
Step 1. MACHINE CONDITION			Refer to Set up Conditions at 5-16-P Machine Condition Setting (for AU-63/62).		
Step 2. VTVM : CH1 LINE OUT CH2 LINE OUT 1. Adjust VR3 and VR7 on the Audio VR Board so that the output level is +0dBu ± 0.2dB.			⊘ VR3, 7 SPECIFICATION : +0dBu ± 0.2dB.		

5-21-N. METER LEVEL ADJUSTMENT (FOR AU-62/63 NTSC)

(W6 AUDIO)

TEST POINT	MODE	TAPE USED	M.EQ.	INPUT SIGNAL	ADJUSTMENT
CH1 METER CH2 METER	EJECT	ALIGNMENT TAPE 1KHz 0VU PORTION	-------	----------	VR101 (CH1 METER) on Front Interface VR102 (CH2 METER) on Front Interface
Step 1. MACHINE CONDITION			Refer to Set Up Conditions at 5-16-N Machine Condition Setting (for AU-63/62).		
Step 2. 1. Adjust VR101 (CH1) and VR102 (CH2) on the Front Interface Board so that the meter indicates "0" VU as shown.			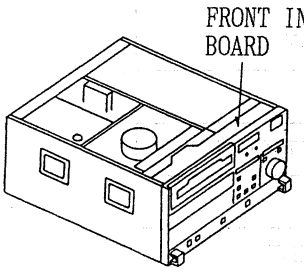 ⊘ VR101 ⊘ VR102 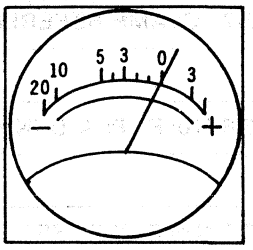		

5-21-P. METER LEVEL ADJUSTMENT (FOR AU-62/63 PAL)

(W6 AUDIO)

TEST POINT	MODE	TAPE USED	M.EQ.	INPUT SIGNAL	ADJUSTMENT
CH1 METER CH2 METER	EJECT	ALIGNMENT TAPE 1KHz 0VU PORTION	-------	----------	VR101 (CH1 METER) on Front Interface VR102 (CH2 METER) on Front Interface
Step 1. MACHINE CONDITION			Refer to Set Up Conditions at 5-16-P Machine Condition Setting (for AU-63/62).		
Step 2. 1. Adjust VR101 (CH1) and VR102 (CH2) on the Front Interface Board so that the meter indicates "-4" VU as shown.			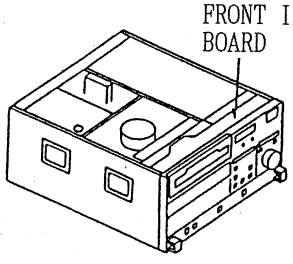 ⊘ VR101 ⊘ VR102 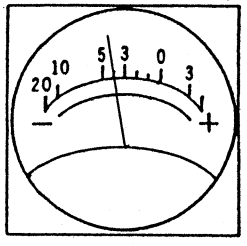		

6. DECODER & CTCM (W4) BOARD (1/2) (FOR AU-65 ONLY)

DECODER & CTCM SECTION (1/2) (W4) FLOWCHART FOR AU-65

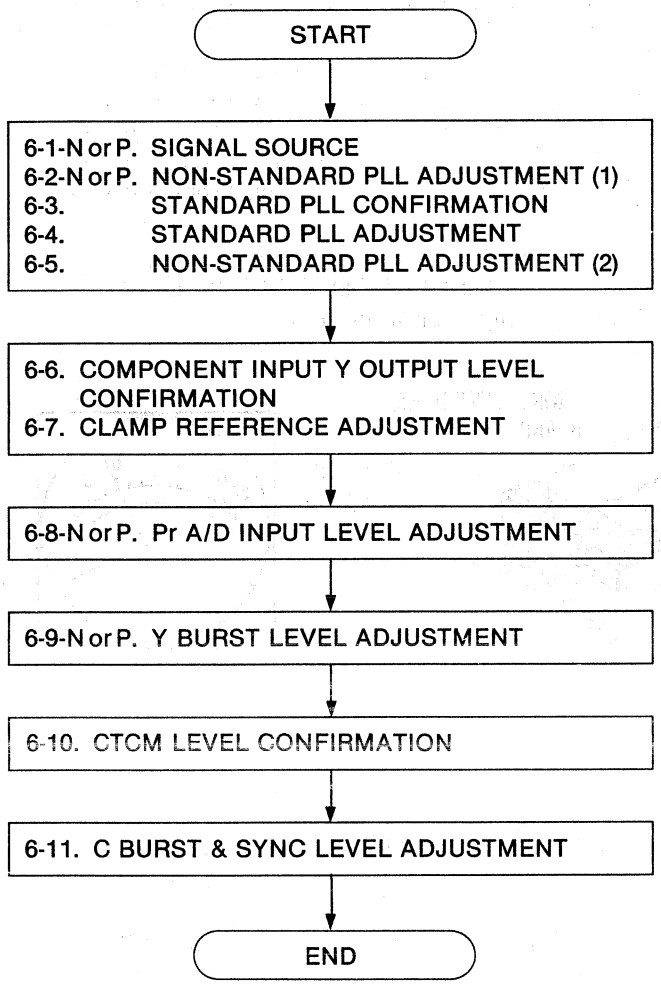

6. DECODER & CTCM (W4) BOARD (1/2) (FOR AU-65 ONLY)

6-1-N. SIGNAL SOURCE (NTSC)

(W4 DEC & CTCM)

Confirm the Signal Level of Signal Generator as follows.

1. COMPOSITE SIGNAL (NTSC)	75% (with 7.5% SET UP) VIDEO LEVEL = 0.714Vp-p SYNC LEVEL = 0.286Vp-p
2. COMPONENT SIGNAL (NTSC)	75% (with 7.5% SET UP) Y VIDEO LEVEL = 0.7Vp-p Y SYNC LEVEL = 0.3Vp-p PB LEVEL = 0.486Vp-p PR LEVEL = 0.486Vp-p
3. Y/C SIGNAL (NTSC)	75% (with 7.5% SET UP) Y VIDEO LEVEL = 0.714Vp-p Y SYNC LEVEL = 0.286Vp-p CHROMA LEVEL = 0.629Vp-p
4. DUB (CTCM) SIGNAL (NTSC)	75% (with 7.5% SET UP) Y VIDEO LEVEL = 0.714Vp-p Y SYNC LEVEL = 0.286Vp-p CTCM (PR) LEVEL = 0.7Vp-p

6-1-P. SIGNAL SOURCE (PAL)

(W4 DEC & CTCM)

Confirm the Signal Level of Signal Generator as follows.

1. COMPOSITE SIGNAL (PAL)	100% (without SET UP) VIDEO LEVEL = 0.7Vp-p SYNC LEVEL = 0.3Vp-p
2. COMPONENT SIGNAL (PAL)	100% (without SET UP) Y VIDEO LEVEL = 0.7Vp-p Y SYNC LEVEL = 0.3Vp-p PB LEVEL = 0.7Vp-p PR LEVEL = 0.7Vp-p
3. Y/C SIGNAL (PAL)	100% (without SET UP) Y VIDEO LEVEL = 0.7Vp-p Y SYNC LEVEL = 0.3Vp-p CHROMA LEVEL = 0.885Vp-p
4. DUB (CTCM) SIGNAL (PAL)	100% (without SET UP) Y VIDEO LEVEL = 0.7Vp-p Y SYNC LEVEL = 0.3Vp-p CTCM (PR) LEVEL = 0.7Vp-p

6-2-N. NON-STANDARD PLL ADJUSTMENT (1) (FOR AU-65 NTSC)

(W4 DEC & CTCM)

TEST POINT	MODE	TAPE USED	M.EQ.	INPUT SIGNAL	ADJUSTMENT
TP701	E-E (EJECT)	------	Digital Voltage Meter (OSCILLOSCOPE)	COMPONENT 75% COLOR BAR	VL701 (NSTD OFFSET) VR702 (PLL POS 1)
Step 1. MACHINE CONDITION			STD/NSTD SELECT : NSTD (Set Up Menu)		
Step 2. 1. D. V. M. (SCOPE) : TP701 2. Adjust VL701 so that the DC voltage is 0 ± 0.2V (DC) at TP701.			⊘ VL701 TP701 = 0 ± 0.2V (DC)		
Step 3. 1. Set VR702 as shown in figure.			VR702 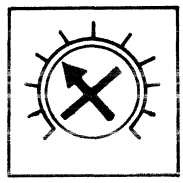		

6-2-P. NON-STANDARD PLL ADJUSTMENT (1) (FOR AU-65 PAL)

(W4 DEC & CTCM)

TEST POINT	MODE	TAPE USED	M.EQ.	INPUT SIGNAL	ADJUSTMENT
TP701	E-E (EJECT)	------	Digital Voltage Meter (OSCILLOSCOPE)	COMPONENT 100% COLOR BAR	VL701 (NSTD OFFSET) VR702 (PLL POS 1)
Step 1. MACHINE CONDITION			STD/NSTD SELECT : NSTD (Set Up Menu)		
Step 2. 1. D. V. M. (SCOPE) : TP701 2. Adjust VL701 so that the DC voltage is 0 ± 0.2V (DC) at TP701.			⊘ VL701 TP701 = 0 ± 0.2V (DC)		
Step 3. 1. Set VR702 as shown in figure.			VR702 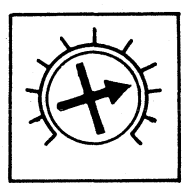		

6-3. STANDARD PLL CONFIRMATION (FOR AU-65 NTSC & PAL)

(W4 DEC & CTCM)

TEST POINT	MODE	TAPE USED	M.EQ.	INPUT SIGNAL	ADJUSTMENT
TP702	E-E (EJECT)	------	OSCILLOSCOPE	COMPONENT COLOR BAR	----------

Step 1. MACHINE CONDITION (STD mode)	1. Set-up Menu No. 1011 → 00 FRONT SWITCH 2. Input signal is standard signal from signal generator.
Step 2. 1. SCOPE : TP702 2. Confirm that the DC voltage is 0 ± 1V (DC) at TP702.	TP702 = 0 ± 1V (DC)

6-4. STANDARD PLL ADJUSTMENT (FOR AU-65 NTSC & PAL)

(W4 DEC & CTCM)

TEST POINT	MODE	TAPE USED	M.EQ.	INPUT SIGNAL	ADJUSTMENT
TP504	E-E (EJECT)	------	OSCILLOSCOPE	COMPONENT COLOR BAR	VR703 (PLL POS 2)

Step 1. MACHINE CONDITION (STD mode)	1. Set-up Menu No. 1011 → 00 FRONT SWITCH 2. Input signal is standard signal from signal generator.
Step 2. 1. SCOPE : TP504 2. Trigger the scope at composite sync of signal generator. 3. Change the STD/NSTD by Set-up Menu alternately. 4. Confirm that the phase difference ("A") is less than 10 nsec.	TP504 ⊘ VR703 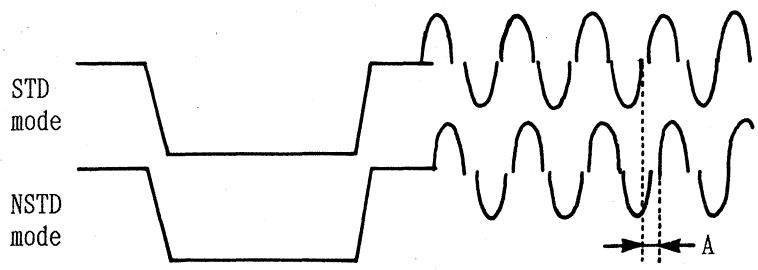 A = Less than 10 nsec.

6-5. NON-STANDARD PLL ADJUSTMENT (2)
(FOR AU-65 NTSC & PAL)

(W4 DEC & CTCM)

TEST POINT	MODE	TAPE USED	M.EQ.	INPUT SIGNAL	ADJUSTMENT
TP703	E-E (EJECT)	------	OSCILLOSCOPE	COMPONENT COLOR BAR	VR702 (PLL POS 1)

Step 1. MACHINE CONDITION (STD mode)	1. Set-up Menu No. 1011 → 00 FRONT SWITCH 2. Input signal is standard signal from signal generator.
Step 2. 1. SCOPE : TP703 2. Trigger the scope at composite sync of signal generator. 3. Change the STD/NSTD by Set-up Menu alternately. 4. Confirm that the pulse position is same at STD mode and NSTD mode. (STD mode is reference) 5. If it is not, adjust VR702 so that the NSTD pulse position is same as STD pulse position. (Less than ± 10nsec.)	TP703 ⊘ VR702 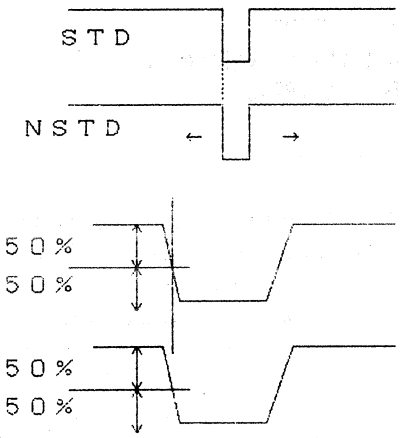

6-6. COMPONENT INPUT Y OUTPUT LEVEL CONFIRMATION (FOR AU-65 NTSC & PAL)

(W4 DEC & CTCM)

TEST POINT	MODE	TAPE USED	M.EQ.	INPUT SIGNAL	ADJUSTMENT
TP504	E-E (EJECT)	------	OSCILLOSCOPE	COMPONENT 100% COLOR BAR	----------

Step 1. MACHINE CONDITION	1. INPUT SELECT : COMPONENT (on Pull Out Drawer) 2. YC/COMPONENT SELECT : COMPONENT (on Front Sub Panel)
Step 2. [NTSC] 1. SCOPE : TP504 2. Confirm that the VIDEO Level (A) is 570 ± 30mVp-p.	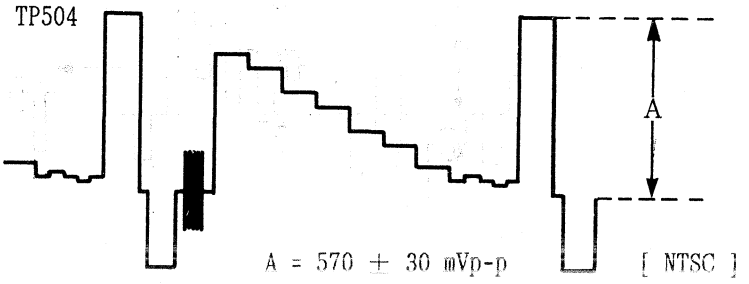
Step 2. [PAL] 1. SCOPE : TP504 2. Confirm that the VIDEO Level (A) is 570 ± 30mVp-p.	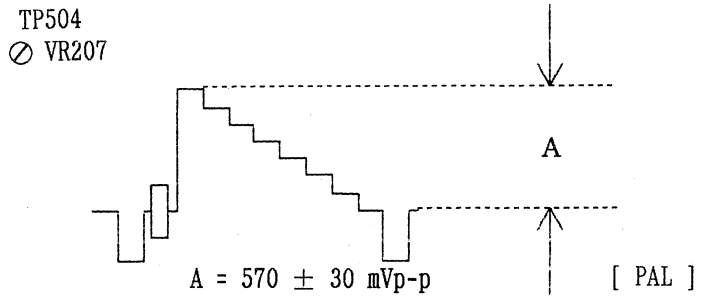

6-7. CLAMP REFERENCE ADJUSTMENTENT (FOR AU-65 NTSC & PAL)

(W4 DEC & CTCM)

TEST POINT	MODE	TAPE USED	M.EQ.	INPUT SIGNAL	ADJUSTMENT
TP601	E-E (EJECT)	-------	OSCILLOSCOPE	COMPONENT COLOR BAR	VR601 (PB CLAMP REF) VR602 (PR CLAMP REF)

Step 1.

1. Adjust VR601 and VR602 so that level differences of "A" and "B" portion are minimum as shown in figure.

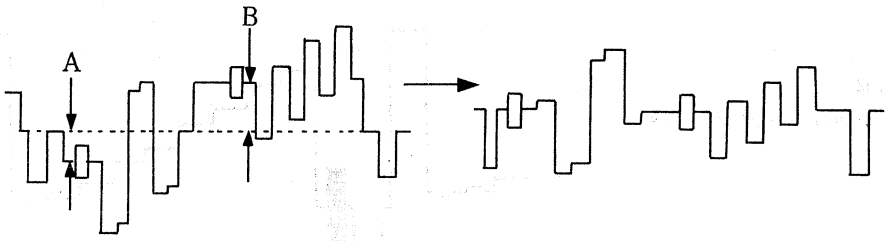

Note:
Expand the level of measurement portion on scope for precise adjustment.

6-8-N. Pr A/D INPUT LEVEL ADJUSTMENT (FOR AU-65 NTSC)

(W4 DEC & CTCM)

TEST POINT	MODE	TAPE USED	M.EQ.	INPUT SIGNAL	ADJUSTMENT
TP601	E-E (EJECT)	-------	OSCILLOSCOPE	COMPONENT 100% COLOR BAR	VR501 (Pr LEV. 2) SW701

Step 1.

CONDITION

SCOPE SETTING
1. This adjustment needs 1 : 1 probe.
2. MODE : ADD

Step 2.

1. SCOPE CH1 : TP601
   SCOPE CH2 : NO SIGNAL
2. SW701 : ADJ side
3. Adjust VR501 so that the cyan portion level becomes just saturated level as shown in figure.

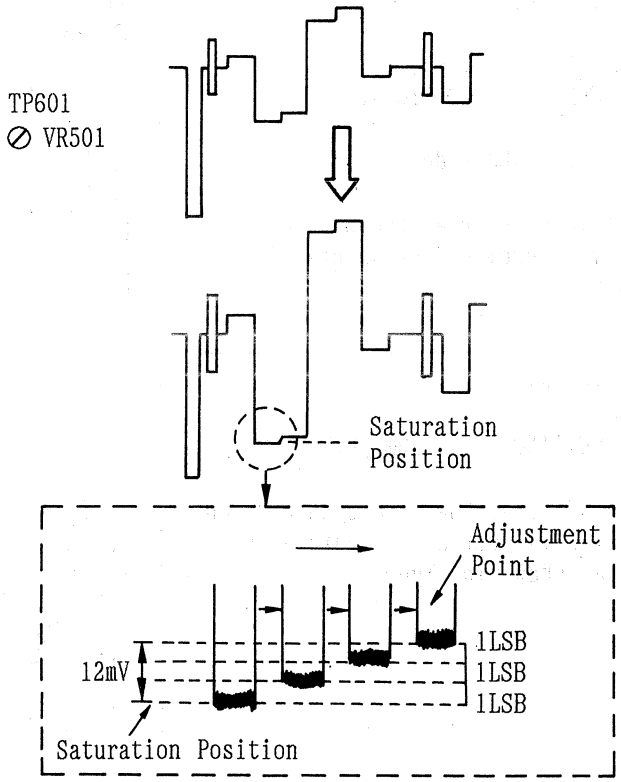

Step 3.

1. SCOPE SETTING : 50mV/DIV.
2. Adjust VR501 so that the cyan portion level is offset by 12mV from the saturated point as shown in figure.
3. SW701 : NORM side

6-8-P. Pr A/D INPUT LEVEL ADJUSTMENT (FOR AU-65 PAL)

(W4 DEC & CTCM)

TEST POINT	MODE	TAPE USED	M.EQ.	INPUT SIGNAL	ADJUSTMENT
TP601	E-E (EJECT)	-------	OSCILLOSCOPE	COMPONENT OVERSIZE RAMP	VR501 (Pr LEV. 2) SW701

Step 1.
CONDITION

SCOPE SETTING
1. This adjustment needs 1 : 1 probe.
2. MODE : ADD

Step 2. (CORSE)

1. SCOPE CH1 : TP601
   SCOPE CH2 : NO SIGNAL
2. SW701 : ADJ side
3. Adjust VR501 so that the portion (A) level becomes just saturated as shown in figure.

TP601
⊘ VR501

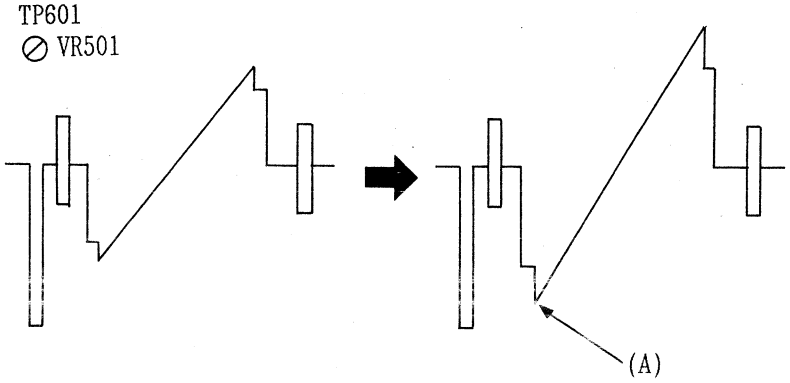

Step 3. (FINE)

1. SCOPE SETTING : 50mV/DIV.
2. Adjust VR501 so that the cyan portion (A) level is just at the saturation point as shown in figure.
3. SW701 : NORM side

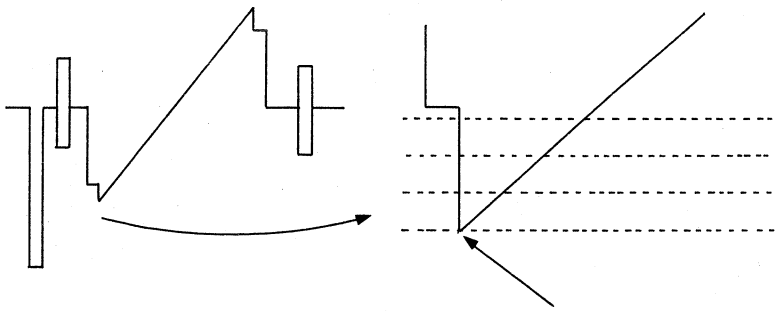

6-9-N. Y BURST LEVEL ADJUSTMENT (FOR AU-65 NTSC)

(W4 DEC & CTCM)

TEST POINT	MODE	TAPE USED	M.EQ.	INPUT SIGNAL	ADJUSTMENT
TP504	E-E (EJECT)	-------	OSCILLOSCOPE	COMPONENT 75% COLOR BAR	VR503 (Y BU LEV.)

Step 1.

1. SCOPE : TP504

2. Adjust VR503 so that A : B = 10 : 3 ± 0.3 as shown in figure.

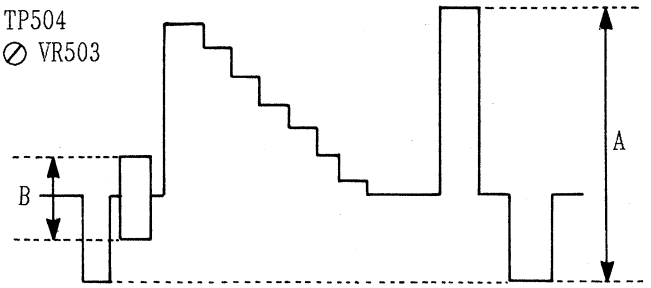

A : B = 10 : 3 ± 0.3

6-9-P. Y BURST LEVEL ADJUSTMENT (FOR AU-65 PAL)

(W4 DEC & CTCM)

TEST POINT	MODE	TAPE USED	M.EQ.	INPUT SIGNAL	ADJUSTMENT
TP504	E-E (EJECT)	-------	OSCILLOSCOPE	COMPONENT 100% COLOR BAR	VR503 (Y BU LEV.)

Step 1.

1. SCOPE : TP504

2. Adjust VR503 so that A : B = 7 : 3 ± 0.3 as shown in figure.

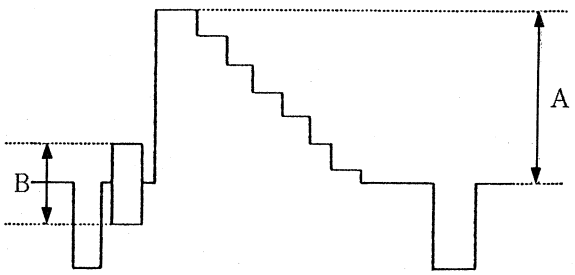

A : B = 7 : 3 ± 0.3

6-10. CTCM LEVEL CONFIRMATION (FOR AU-65 NTSC & PAL)

(W4 DEC & CTCM)

TEST POINT	MODE	TAPE USED	M.EQ.	INPUT SIGNAL	ADJUSTMENT
TP601	E-E (EJECT)	-------	OSCILLOSCOPE	COMPONENT COLOR BAR (NTSC 75%) (PAL 100%)	VR604 (CTCM LEV.)

Step 1.

1. SCOPE : TP601

2. Adjust VR604 so that the Pr peak to peak level (A) is 670 ± 8mVp-p.

TP601
⊘ VR604

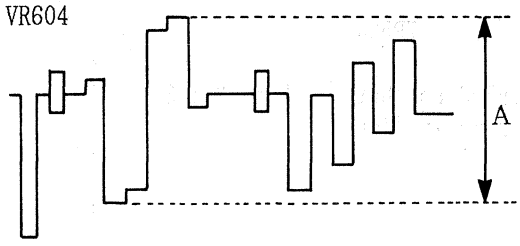

A = 670 ± 8mVp-p

6-11. C BURST & SYNC LEVEL ADJUSTMENT (FOR AU-65 NTSC & PAL)

(W4 DEC & CTCM)

TEST POINT	MODE	TAPE USED	M.EQ.	INPUT SIGNAL	ADJUSTMENT
TP601	E-E (EJECT)	-------	OSCILLOSCOPE	COMPONENT COLOR BAR (NTSC 75%) (PAL 100%)	VR504 (C BU LEV.) VR603 (C SY LEV.)

Step 1.

1. SCOPE : TP601

2. Adjust VR504 so that A : B (C) = 7 : 3 (± 0.09) as shown in figure set A to 7 divisions using uncal contorol.

3. Adjust VR603 so that A : D = 7 : 6.5 (± 0.2) as shown in figure.

Note:
When adjust VR504, expand the time/div of the scope.

TP601
⊘ VR504
⊘ VR603

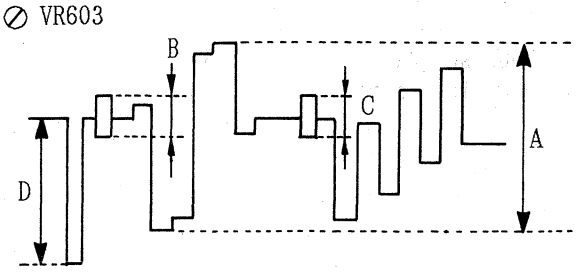

A : B (C) = 7 : 3 (± 0.09)
A : D = 7 : 6.5 (± 0.2)

7. MODULATION & DEMODULATION (W3) BOARD (1/2)

MODULATION & DEMODULATION SECTION (1/2) (W3) FLOWCHART FOR AU-65

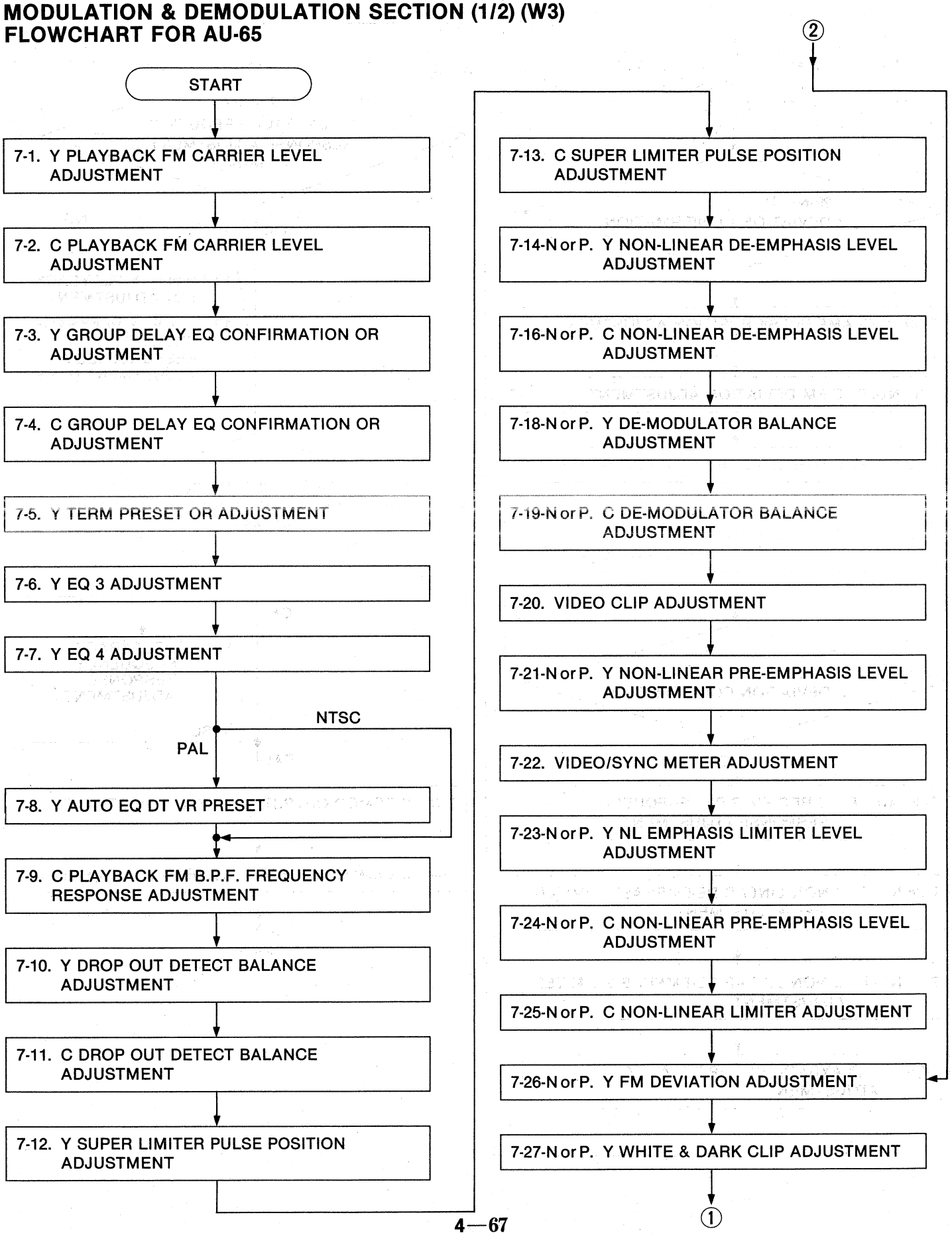

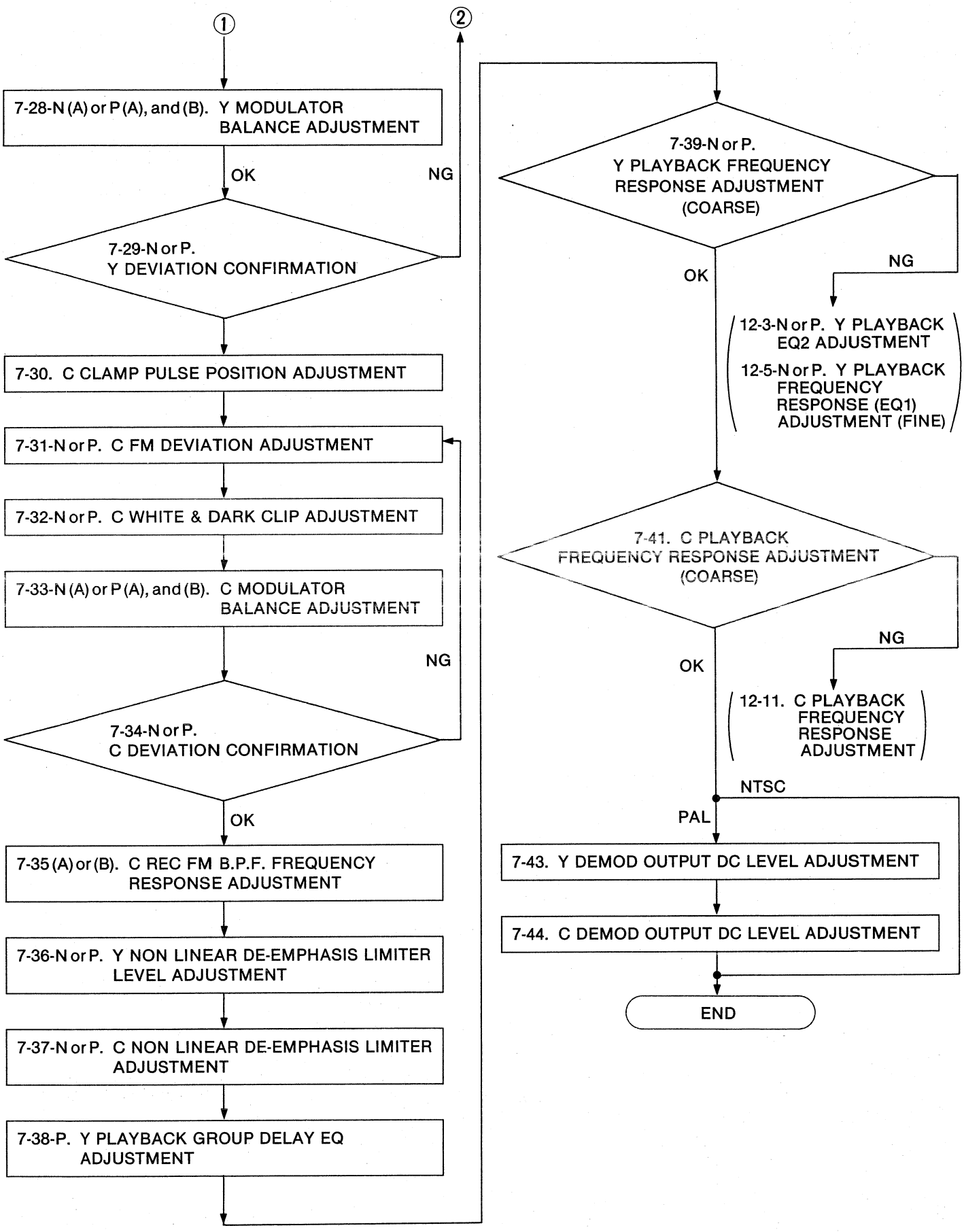
①
②
7-28-N (A) or P (A), and (B). Y MODULATOR BALANCE ADJUSTMENT
OK
NG
7-29-N or P. Y DEVIATION CONFIRMATION
7-30. C CLAMP PULSE POSITION ADJUSTMENT
7-31-N or P. C FM DEVIATION ADJUSTMENT
7-32-N or P. C WHITE & DARK CLIP ADJUSTMENT
7-33-N (A) or P (A), and (B). C MODULATOR BALANCE ADJUSTMENT
NG
7-34-N or P. C DEVIATION CONFIRMATION
OK
7-35 (A) or (B). C REC FM B.P.F. FREQUENCY RESPONSE ADJUSTMENT
7-36-N or P. Y NON LINEAR DE-EMPHASIS LIMITER LEVEL ADJUSTMENT
7-37-N or P. C NON LINEAR DE-EMPHASIS LIMITER ADJUSTMENT
7-38-P. Y PLAYBACK GROUP DELAY EQ ADJUSTMENT
7-39-N or P. Y PLAYBACK FREQUENCY RESPONSE ADJUSTMENT (COARSE)
NG
OK
12-3-N or P. Y PLAYBACK EQ2 ADJUSTMENT
12-5-N or P. Y PLAYBACK FREQUENCY RESPONSE (EQ1) ADJUSTMENT (FINE)
7-41. C PLAYBACK FREQUENCY RESPONSE ADJUSTMENT (COARSE)
NG
OK
12-11. C PLAYBACK FREQUENCY RESPONSE ADJUSTMENT
NTSC
PAL
7-43. Y DEMOD OUTPUT DC LEVEL ADJUSTMENT
7-44. C DEMOD OUTPUT DC LEVEL ADJUSTMENT
END

MODULATION & DEMODULATION SECTION (1/2) FLOWCHART (W3) FOR AU-63

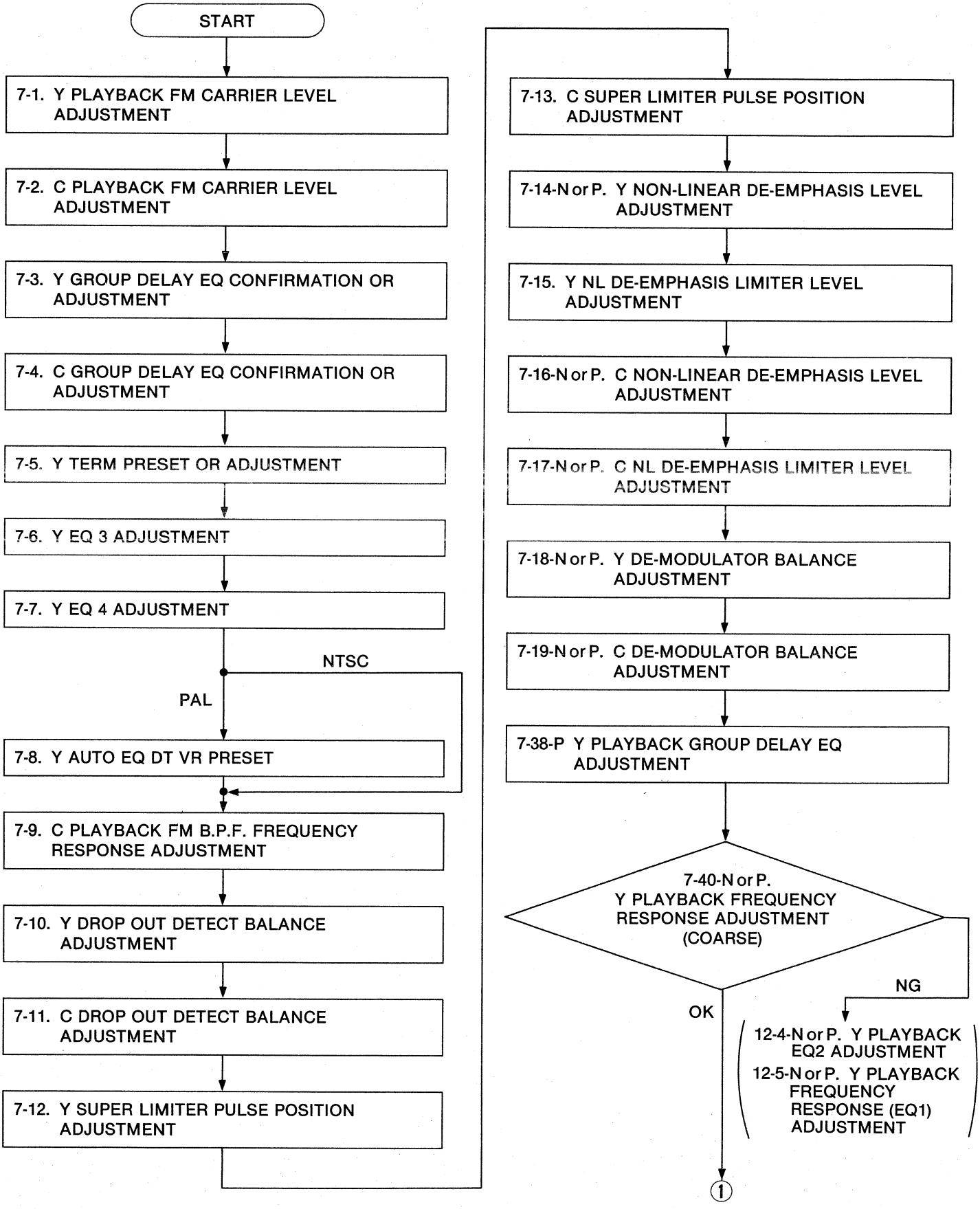

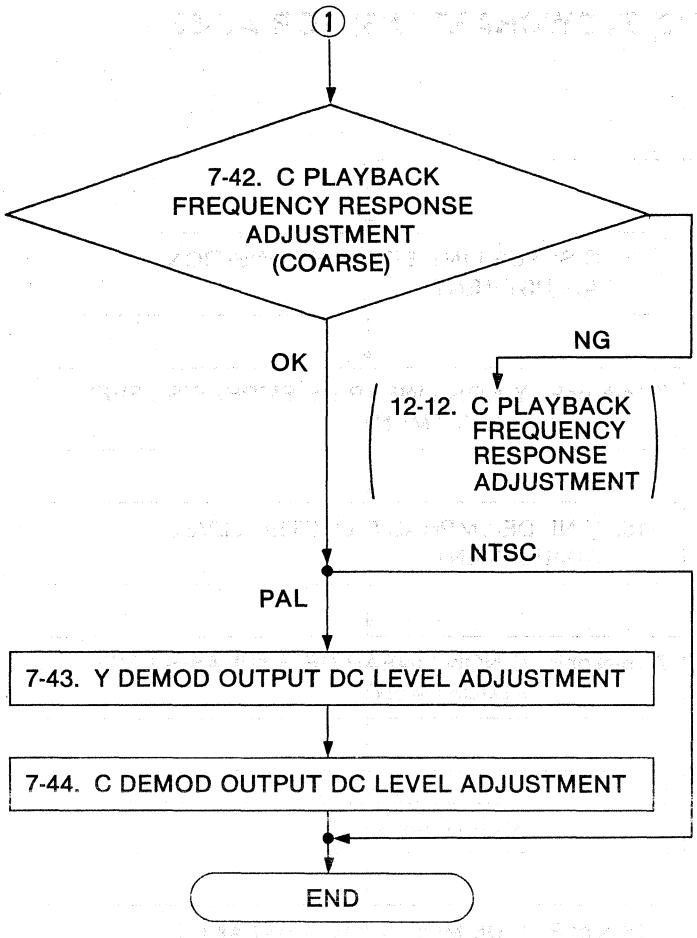
①
7-42. C PLAYBACK FREQUENCY RESPONSE ADJUSTMENT (COARSE)
NG
OK
12-12. C PLAYBACK FREQUENCY RESPONSE ADJUSTMENT
NTSC
PAL
7-43. Y DEMOD OUTPUT DC LEVEL ADJUSTMENT
7-44. C DEMOD OUTPUT DC LEVEL ADJUSTMENT
END

MODULATION & DEMODULATION SECTION (1/2) (W3) FLOWCHART FOR AU-62

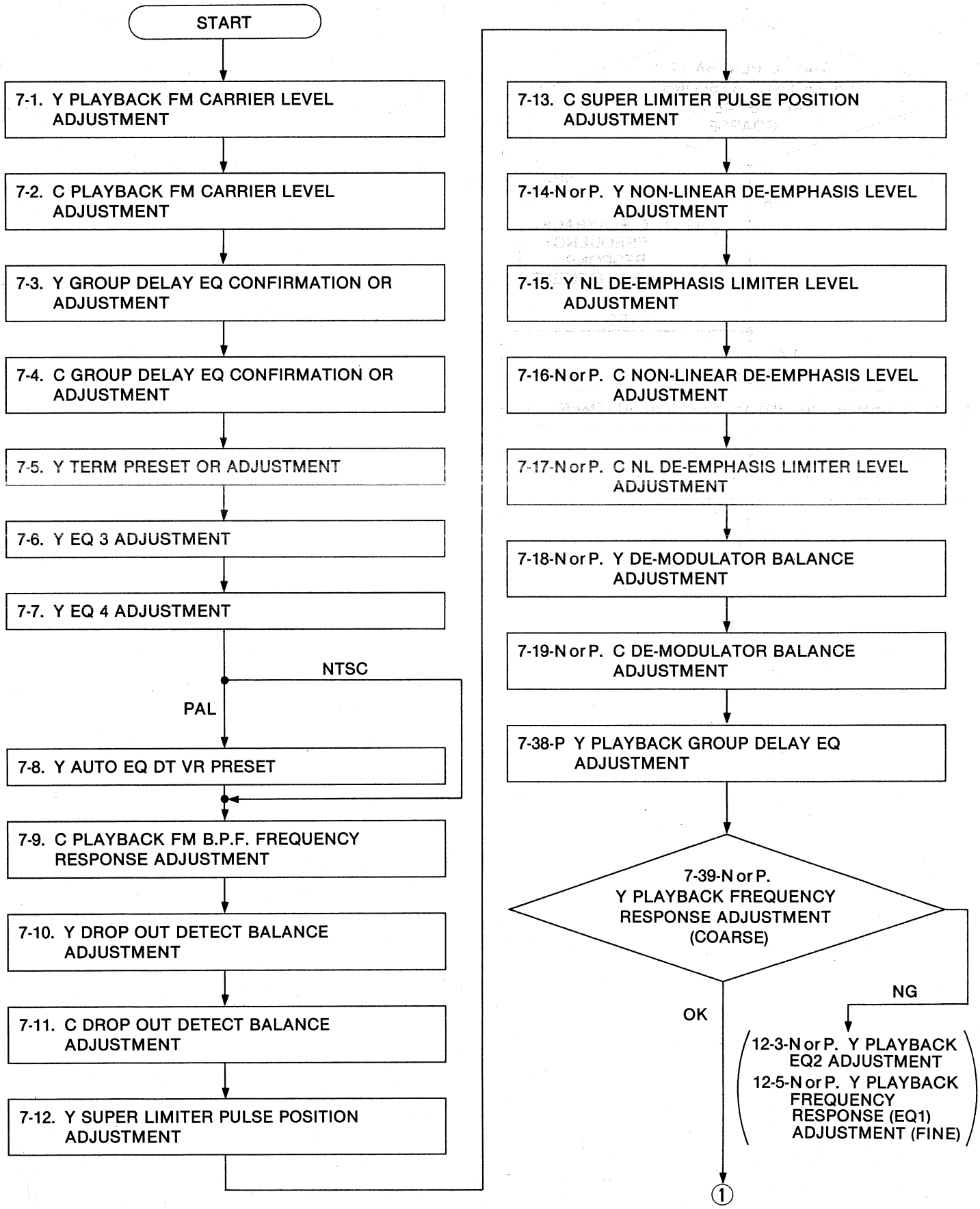

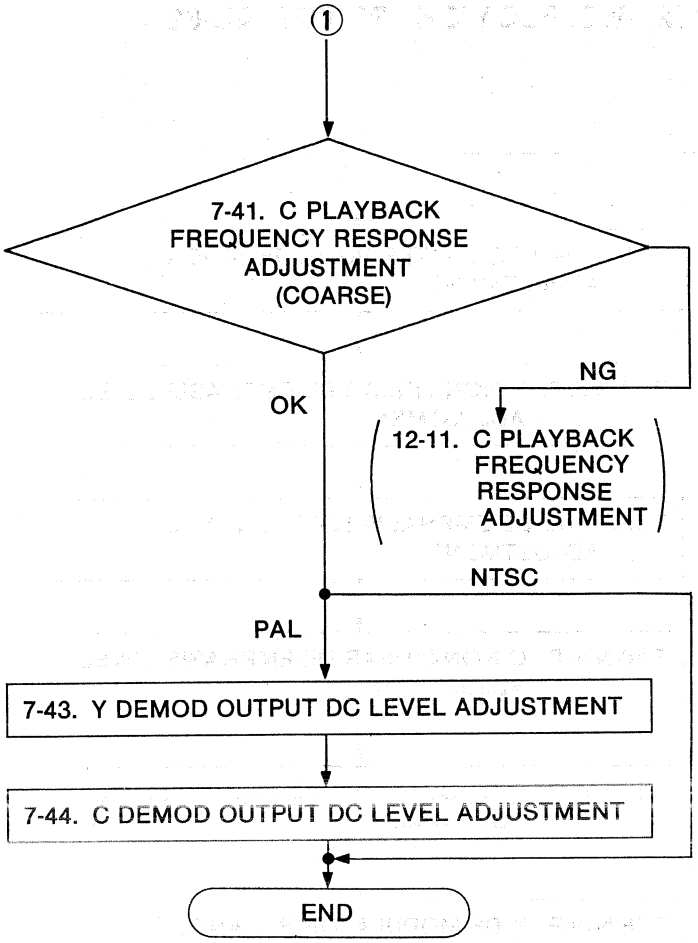
①
7-41. C PLAYBACK FREQUENCY RESPONSE ADJUSTMENT (COARSE)
NG
OK
12-11. C PLAYBACK FREQUENCY RESPONSE ADJUSTMENT
NTSC
PAL
7-43. Y DEMOD OUTPUT DC LEVEL ADJUSTMENT
7-44. C DEMOD OUTPUT DC LEVEL ADJUSTMENT
END

7. MODULATION & DEMODULATION (W3) BOARD (1/2)

7-1. Y PLAYBACK FM CARRIER LEVEL ADJUSTMENT (FOR AU-65/AU-63/AU-62 NTSC & PAL)

(W3: MOD & DEMOD)

TEST POINT	MODE	TAPE USED	M.EQ.	INPUT SIGNAL	ADJUSTMENT
TP301 F29·AB (Trigger)	PLAY	ALIGNMENT TAPE COLOR BAR	OSCILLOSCOPE	-------	VR301 <R/P (AT) CH2 LEV> VR303 <R/P (AT) CH1 LEV>

1. SCOPE CH1 : TP301
   SCOPE CH2 : F29·AB EDGE CONNECTOR (on W3) For Trigger
2. Adjust VR301 and VR303 so that the signal level at TP301 is 400 ± 20mVp-p.

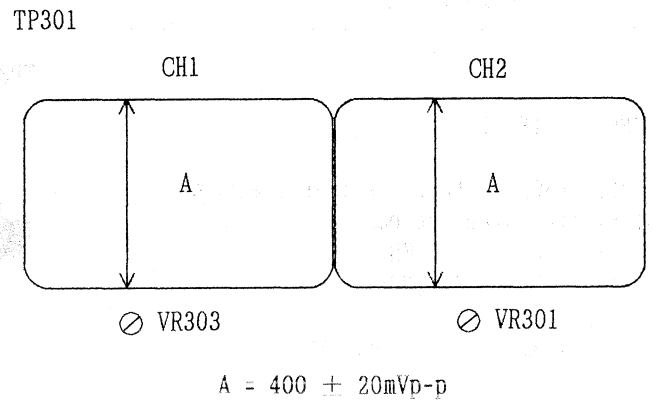

7-2. C PLAYBACK FM CARRIER LEVEL ADJUSTMENT (FOR AU-65/AU-63/AU-62 NTSC & PAL)

(W3: MOD & DEMOD)

TEST POINT	MODE	TAPE USED	M.EQ.	INPUT SIGNAL	ADJUSTMENT
TP701 F33·AB (Trigger)	PLAY	ALIGNMENT TAPE COLOR BAR	OSCILLOSCOPE	-------	VR701 (R/P CH2 LEV) VR702 (R/P CH1 LEV)

1. SCOPE CH1 : TP701
   SCOPE CH2 : F33·AB EDGE CONNECTOR (on W3) For Trigger
2. Adjust VR701 and VR702 so that the signal level at TP701 is 400 ± 20mVp-p.

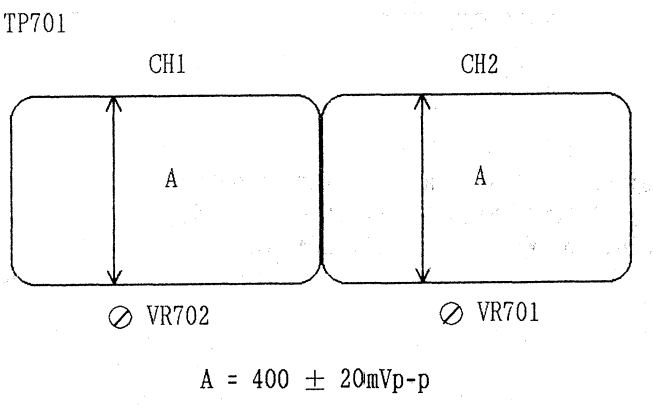

7-3. Y GROUP DELAY EQ CONFIRMATION OR ADJUSTMENT (FOR AU-65/AU-63/AU-62 NTSC & PAL)

(W3: MOD & DEMOD)

TEST POINT	MODE	TAPE USED	M.EQ.	INPUT SIGNAL	ADJUSTMENT
TP302	PLAY	ALIGNMENT TAPE RF SWEEP	OSCILLOSCOPE	-------	VL301 (Y G-D, EQ)

Step 1. MACHINE CONDITION	TJ301 (on W3) : OPEN CONTACT
Step 2. 1. SCOPE : TP302 2. Adjust VL301 so that the trap frequency (A) of line sweep becomes NTSC 8.0 ± 0.1MHz PAL 7.7 ± 0.1MHz 3. TJ301 (on W3) : CLOSE CONTACT	TP302 ⊘ VL301 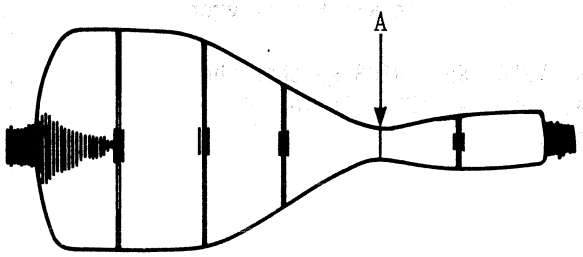 NTSC A = 8.0 ± 0.1MHz PAL A = 7.7 ± 0.1MHz

7-4. C GROUP DELAY EQ CONFIRMATION OR ADJUSTMENT (FOR AU-65/AU-63/AU-62 NTSC & PAL)

(W3: MOD & DEMOD)

TEST POINT	MODE	TAPE USED	M.EQ.	INPUT SIGNAL	ADJUSTMENT
TP702	PLAY	ALIGNMENT TAPE RF SWEEP	OSCILLOSCOPE	-------	VL701 (C G, D, EQ)

Step 1. MACHINE CONDITION	TJ701 (on W3) : OPEN CONTACT
Step 2. 1. SCOPE : TP702 2. Adjust VL701 so that the trap frequency (A) of line sweep becomes 6.0 ± 0.1MHz. 3. TJ701 (on W3) : CLOSE CONTACT	TP702 ⊘ VL701 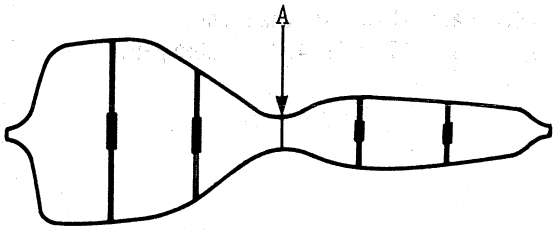 A = 6.0 ± 0.1MHz

7-5. Y TERM PRESET POSITION OR ADJUSTMENT (FOR AU-65/AU-63/AU-62 NTSC & PAL)

(W3: MOD & DEMOD)

Note : Before performing this adjustment STEP, you need to "PRE-SET" the following pots : VR309, VR311, VR310.

Step 1. 1. Preset VR309 (TERM) to the 3 o'clock position.	⊘ VR309 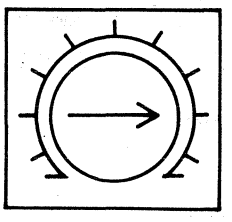

7-6. Y EQ 3 ADJUSTMENT (FOR AU-65/AU-63/AU-62 NTSC & PAL)

(W3: MOD & DEMOD)

Step 1. 1. Preset VR311 (EQ3) to the 10 o'clock position.	⊘ VR311 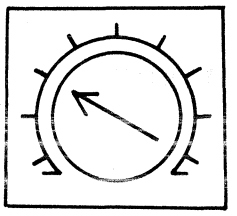

7-7. Y EQ 4 ADJUSTMENT (FOR AU-65/AU-63/AU-62 NTSC & PAL)

(W3: MOD & DEMOD)

Step 1. 1. Turn VR310 fully clockwise.	⊘ VR310 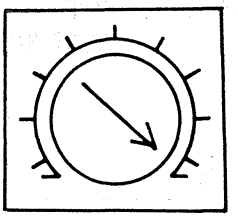

7-8. Y AUTO EQ DT VR PRESET (FOR AU-65/AU-63/AU-62 PAL)

(W3: MOD & DEMOD)

Step 1. Note: This adjustment is PAL model only. 1. Preset VR 328 (A EQ DT V) to the center position.	⊘ VR328 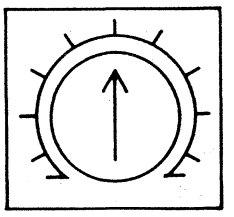

7-9. C PLAYBACK FM B.P.F. FREQUENCY RESPONSE ADJUSTMENT (FOR AU-65/AU-63/AU-62 NTSC & PAL)

(W3: MOD & DEMOD)

TEST POINT	MODE	TAPE USED	M.EQ.	INPUT SIGNAL	ADJUSTMENT
TP703	PLAY	ALIGNMENT TAPE RF SWEEP	OSCILLOSCOPE	-------	VL702 (C BPF F.R.)

Step 1. MACHINE CONDITION	SW704 (on W3) : OFF TJ702 (on W3) : OPEN CONTACT
Step 2. 1. SCOPE : TP703 2. Adjust VL702 so that the trap frequency (A) of line sweep becomes NTSC 6.3 ± 0.1MHz PAL 8.0 ± 0.1MHz	TP703 ⊘ VL702 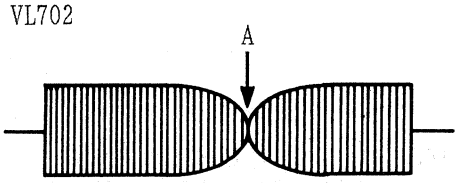 NTSC A = 6.3 ± 0.1MHz PAL A = 8.0 ± 0.1MHz
Step 3. RESET MACHINE CONDITION	SW704 (on W3) [NTSC] : OFF [PAL] : ON TJ702 (on W3) CLOSE CONTACT

7-10. Y DROP OUT DETECT BALANCE ADJUSTMENT (FOR AU-65/AU-63/AU-62 NTSC & PAL)

(W3: MOD & DEMOD)

TEST POINT	MODE	TAPE USED	M.EQ.	INPUT SIGNAL	ADJUSTMENT
TP307 F29·AB (Trigger) TP308	PLAY	ALIGNMENT TAPE COLOR BAR	OSCILLOSCOPE	-------	VR317 (LIM IN RF LEV.) VR321 (Y DO BAL)

Step 1. MACHINE CONDITION	SW304 (on W3) : OFF
Step 2. 1. SCOPE CH1 : TP307 SCOPE CH2 : F29·AB TERMINAL (Trigger) 2. Turn VL317 fully clockwise until the RF level becomes 0 (zero).	TP307 ⊘ VR317 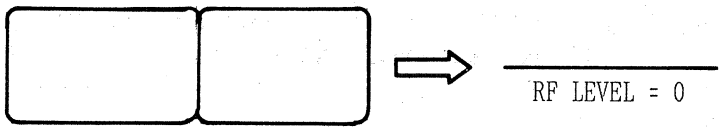
Step 3. 1. SCOPE : TP308 2. SCOPE MODE : DC MODE 3. Adjust VR321 for minimum DC Level.	

Step 4. 1. SCOPE CH1 : TP307 SCOPE CH2 : F29·AB TERMINAL (Trigger) 2. Adjust VR317 so that the RF level becomes 300mVp-p.	TP307 ⊘ VR317 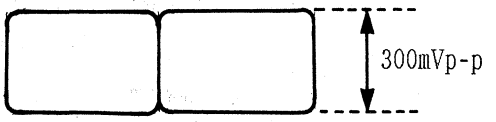
Step 5. 1. SW304 : ON (SUPER LIMITER ON)	

7-11. C DROP OUT DETECT BALANCE ADJUSTMENT (FOR AU-65/AU-63/AU-62 NTSC & PAL)

(W3: MOD & DEMOD)

TEST POINT	MODE	TAPE USED	M.EQ.	INPUT SIGNAL	ADJUSTMENT
TP703 TP704	PLAY	ALIGNMENT TAPE COLOR BAR	OSCILLOSCOPE	-------	VR714 (LIM IN RF LEV.) VR718 (Y DO BAL)

Step 1. MACHINE CONDITION	SW704 (on W3) : OFF
Step 2. 1. SCOPE CH1 : TP703 SCOPE CH2 : F33·AB TERMINAL (Trigger) 2. Turn VR714 fully clockwise until the RF level becomes 0 (zero).	TP703 ⊘ VR714 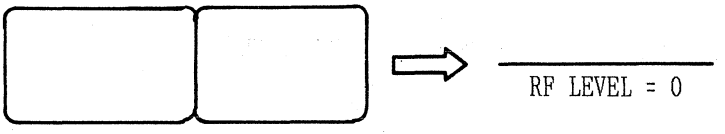
Step 3. 1. SCOPE : TP704 2. SCOPE MODE : DC MODE 3. Adjust VR718 for minimum DC Level.	
Step 4. 1. SCOPE CH1 : TP703 SCOPE CH2 : F33·AB TERMINAL (Trigger) 2. Adjust VR714 so that the RF level becomes 300mVp-p.	TP703 ⊘ VR714 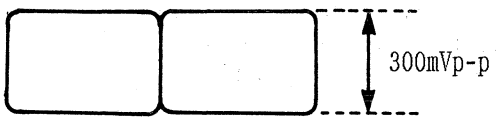
Step 5. 1. SW704 : OFF	At this time, SW704 isn't used, leave it in the OFF position.

7-12. Y SUPER LIMITER PULSE POSITION ADJUSTMENT (FOR AU-65/AU-63/AU-62 NTSC & PAL)

(W3: MOD & DEMOD)

TEST POINT	MODE	TAPE USED	M.EQ.	INPUT SIGNAL	ADJUSTMENT
TP307	PLAY	ALIGNMENT TAPE COLOR BAR	OSCILLOSCOPE	---------	VC301 (Y P. POS)

Step 1.

1. Play back the color bar portion of the Alignment Tape.
2. SCOPE : TP307
3. SCOPE SETTING : without 20MHz Filter
4. SW304 : ON (Super Limiter function)
5. Adjust VC301 so that the spike pulse is located on the RF peak position as shown in figure.

TP307 ⊘ VC301

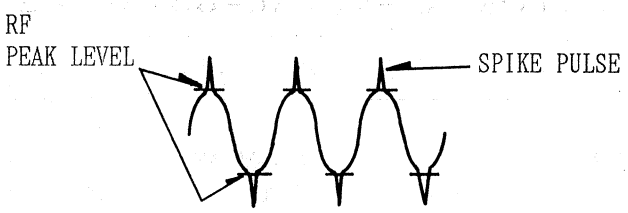

SCOPE TIME/DIV : 5 nsec (Max.)

7-13. C SUPER LIMITER PULSE POSITION ADJUSTMENT (FOR AU-65/AU-63/AU-62 NTSC & PAL)

(W3: MOD & DEMOD)

TEST POINT	MODE	TAPE USED	M.EQ.	INPUT SIGNAL	ADJUSTMENT
TP703	PLAY	ALIGNMENT TAPE COLOR BAR	OSCILLOSCOPE	---------	VC701 (C P. POS)

Step 1.

1. Play back the color bar portion of the Alignment Tape.
2. SCOPE : TP703
3. SCOPE SETTING : without 20MHz Filter
4. SW704 : ON (Super Limiter function)
5. Adjust VC701 so that the spike pulse is located on the RF peak position as shown in figure.

Note [NTSC]:
The chroma super limiter function is not used at this time in NTSC model.

TP703 ⊘ VC701

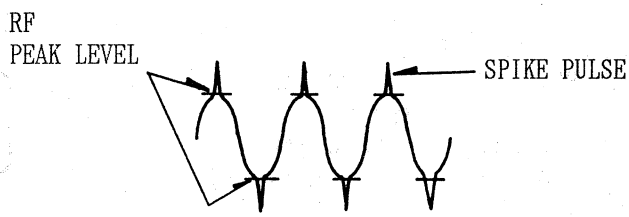

SCOPE TIME/DIV : 5 nsec (Max.)

7-14-N. Y NON-LINEAR DE-EMPHASIS LEVEL ADJUSTMENT (FOR AU-65/AU-63/AU-62 NTSC)

(W3: MOD & DEMOD)

TEST POINT	MODE	TAPE USED	M.EQ.	INPUT SIGNAL	ADJUSTMENT
TP309	PLAY	ALIGNMENT TAPE COLOR BAR	OSCILLOSCOPE	-------	VR322 (NL LEV)

TP309 ⊘ VR322

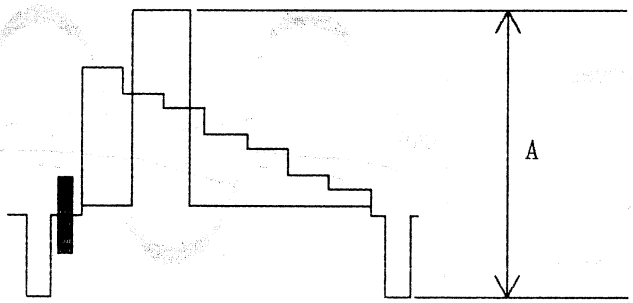

A = 2.5 ± 0.03Vp-p

7-14-P. Y NON-LINEAR DE-EMPHASIS LEVEL ADJUSTMENT (FOR AU-65/AU-63/AU-62 PAL)

(W3: MOD & DEMOD)

TEST POINT	MODE	TAPE USED	M.EQ.	INPUT SIGNAL	ADJUSTMENT
TP309	PLAY	ALIGNMENT TAPE COLOR BAR	OSCILLOSCOPE	-------	VR322 (NL LEV)

TP309 ⊘ VR322

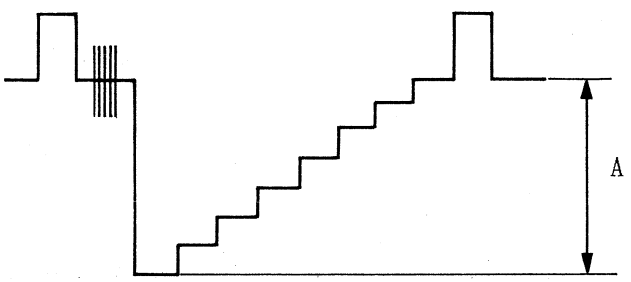

A = 1.1 ± 0.02Vp-p

7-15. Y NL DE-EMPHASIS LIMITER LEVEL ADJUSTMENT (FOR AU-62/63 NTSC & PAL)

(W3: MOD & DEMOD)

TEST POINT	MODE	TAPE USED	M.EQ.	INPUT SIGNAL	ADJUSTMENT
TP310	PLAY	ALIGNMENT TAPE 100% BOW TIE	OSCILLOSCOPE	-------	VR323 (NL LIM BAL) VR324 (NL LIM LEV)

1. Playback 100% BOW TIE signal and expand it.
2. Adjust VR324 so that V1 becomes
   NTSC : 340 ± 5mVp-p
   PAL : 360 ± 5mVp-p
3. SCOPE SETTING : DC Mode
4. Adjust VR323 so that the level V2 equals the level V3 (50 : 50%).

TP310

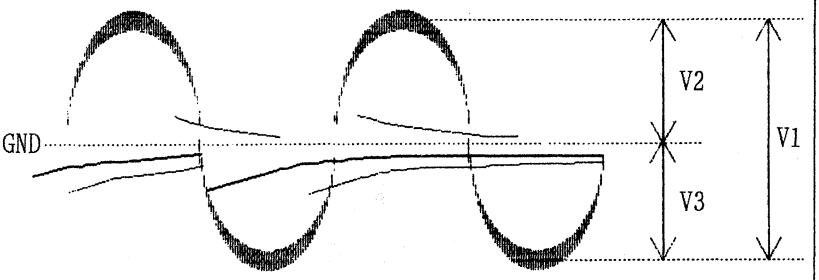

⊘ VR324 : (NTSC) V1 = 340 ± 5mVp-p
(PAL) V1 = 360 ± 5mVp-p
⊘ VR323 : V2 = V3

7-16-N. C NON-LINEAR DE-EMPHASIS LEVEL ADJUSTMENT (FOR AU-65/AU-63/AU-62 NTSC)

(W3: MOD & DEMOD)

TEST POINT	MODE	TAPE USED	M.EQ.	INPUT SIGNAL	ADJUSTMENT
TP706	PLAY	ALIGNMENT TAPE COLOR BAR	OSCILLOSCOPE	-------	VR719 (NL LEV)

1. Adjust VR719 so that the Pr signal level at TP706 is 1.68 ± 0.02Vp-p.

TP706 ⊘ VR719

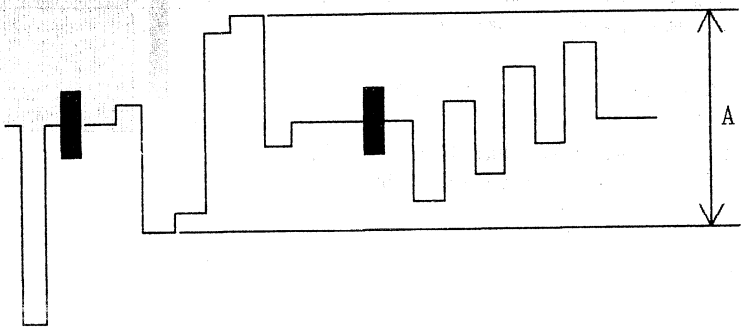

A = 1.68 ± 0.02Vp-p

7-16-P. C NON-LINEAR DE-EMPHASIS LEVEL ADJUSTMENT (FOR AU-65/AU-63/AU-62 PAL)

(W3: MOD & DEMOD)

TEST POINT	MODE	TAPE USED	M.EQ.	INPUT SIGNAL	ADJUSTMENT
TP706	PLAY	ALIGNMENT TAPE COLOR BAR	OSCILLOSCOPE	-------	VR719 (NL LEV)

1. Adjust VR719 so that the Pr signal level at TP706 is 1.1 ± 0.02Vp-p.

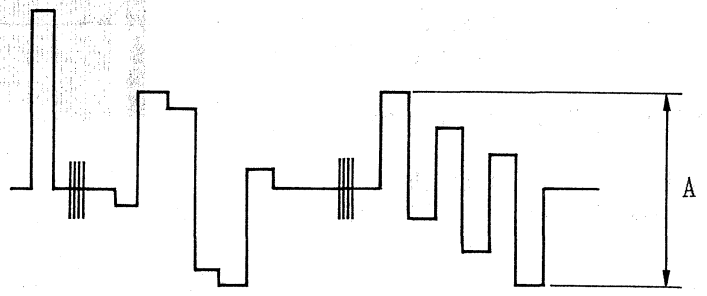

A = 1.1 ± 0.02Vp-p

7-17-N. C NL DE-EMPHASIS LIMITER LEVEL ADJUSTMENT (FOR AU-62/AU-63 NTSC)

(W3 MOD & DEMOD)

TEST POINT	MODE	TAPE USED	M.EQ.	INPUT SIGNAL	ADJUSTMENT
TP707	PLAY	ALIGNMENT TAPE 100% BOW TIE	OSCILLOSCOPE	-------	VR720 (LIM BAL) VR721 (NL LIM LEV)

1. Play back the 100% BOW TIE portion and expand Pb portion.
2. Adjust VR721 so that the level V1 becomes 340mV ± 5mVp-p.
3. SCOPE SETTING : DC mode.
4. Adjust VR720 so that the level V2 equals the level V3 (50 : 50%).

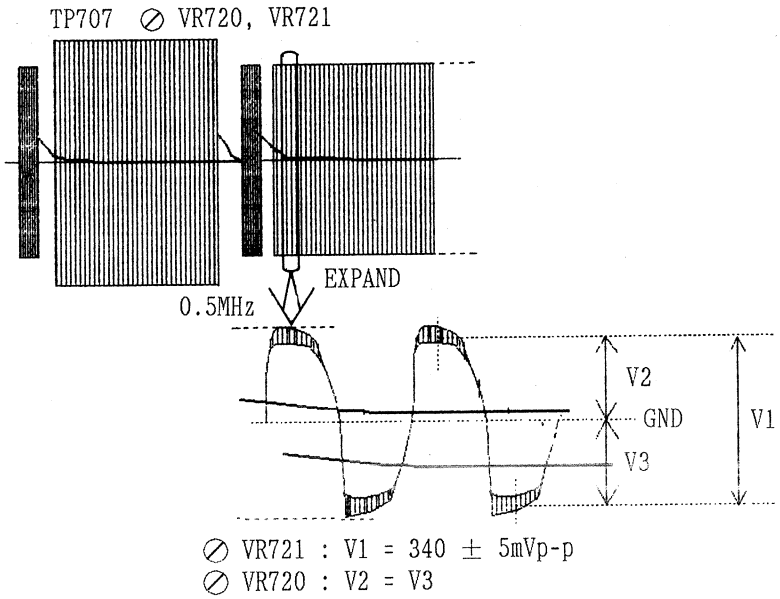

7-17-P. C NL DE-EMPHASIS LIMITER LEVEL ADJUSTMENT (FOR AU-62/AU-63 PAL)

(W3 MOD & DEMOD)

TEST POINT	MODE	TAPE USED	M.EQ.	INPUT SIGNAL	ADJUSTMENT
TP707	PLAY	ALIGNMENT TAPE 100% BOW TIE	OSCILLOSCOPE	-------	VR720 (LIM BAL) VR721 (NL LIM LEV)

1. Play back the 100% BOW TIE portion and expand Pb portion.
2. Adjust VR721 so that the level V1 becomes 400mV ± 5mVp-p.
3. SCOPE SETTING : DC mode.
4. Adjust VR720 so that the level V2 equals the level V3 (50 : 50%).

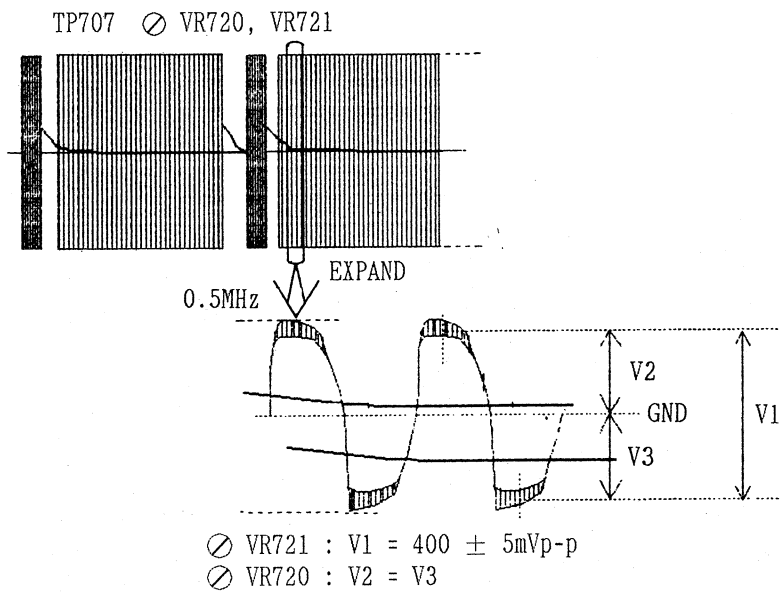

7-18-N. Y DE-MODULATOR BALANCE ADJUSTMENT (FOR AU-65/63/62 NTSC)

(W3 MOD & DEMOD)

TEST POINT	MODE	TAPE USED	M.EQ.	INPUT SIGNAL	ADJUSTMENT
COMPONENT Y OUT F28·AB TERMINAL (Trigger)	PLAY	ALIGNMENT TAPE SWEEP	WAVE FORM MONITOR (TEK 1750)	----------	VR318 (LIM BAL) VR319 (DEMOD BAL)

<FOR AU-63/62>
1. SCOPE CH1 : COMPONENT Y OUT
   SCOPE CH2 : F28·AB TERMINAL (Trigger)
2. Adjust VR318 and VR319 so that the moire is minimized at lower part of 3 ~ 4 MHz.

<FOR AU-65>
1. Supply a Component 60% H. SWEEP signal to Component Input.
2. MODE : E-E
3. SCOPE CH1 : COMPONENT Y OUT
   SCOPE CH2 : F28·AB (Trigger)
4. Adjust VR318 and VR319 so that the moire is minimized at lower part of 3 ~ 4MHz.

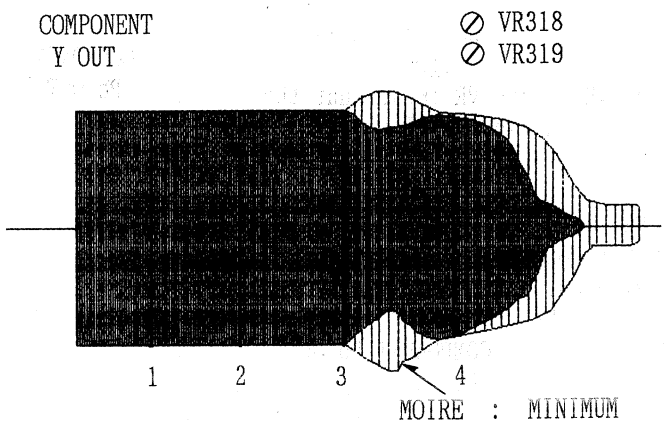

7-18-P. Y DE-MODULATOR BALANCE ADJUSTMENT (FOR AU-65/63/62 PAL)

(W3 MOD & DEMOD)

TEST POINT	MODE	TAPE USED	M.EQ.	INPUT SIGNAL	ADJUSTMENT
COMPONENT Y OUT F28·AB TERMINAL (Trigger)	PLAY	ALIGNMENT TAPE SWEEP	WAVE FORM MONITOR (TEK 1750)	----------	VR318 (LIM BAL) VR319 (DEMOD BAL)

<FOR AU-63/62>
1. SCOPE CH1 : COMPONENT Y OUT
   SCOPE CH2 : F28·AB TERMINAL (Trigger)
2. Adjust VR318 and VR319 so that the moire is minimized at lower part of 3 ~ 4 MHz.

<FOR AU-65>
1. Supply a Component 60% H. SWEEP signal to Component Input.
2. MODE : E-E
3. SCOPE CH1 : COMPONENT Y OUT
   SCOPE CH2 : F28·AB (Trigger)
4. Adjust VR318 and VR319 so that the moire is minimized at lower part of 3 ~ 4MHz.

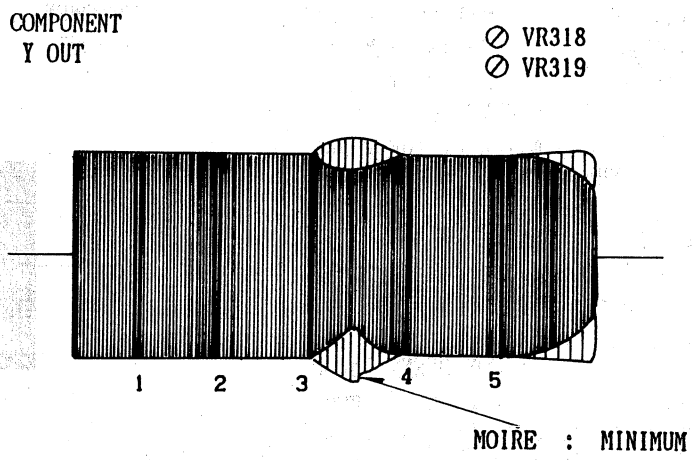

7-19-N. C DE-MODULATOR BALANCE ADJUSTMENT (FOR AU-65/63/62 NTSC)

(W3 MOD & DEMOD)

TEST POINT	MODE	TAPE USED	M.EQ.	INPUT SIGNAL	ADJUSTMENT
COMPONENT Pb OUT F33·AB TERMINAL (Trigger)	PLAY	ALIGNMENT TAPE SWEEP	WAVE FORM MONITOR (TEK 1750)	----------	VR715 (LIM BAL) VR716 (DEMOD BAL)

<FOR AU-63/62>
1. SCOPE CH1 : COMPONENT Pb OUT
   SCOPE CH2 : F33·AB TERMINAL (Trigger)
2. Adjust VR715 and VR716 so that the moire is minimized at lower part of 1 ~ 1.5MHz.

<FOR AU-65>
1. Supply a Component 60% H. SWEEP signal to Component Input.
2. MODE : E-E
3. SCOPE CH1 : COMPONENT Pb OUT
   SCOPE CH2 : F33·AB (Trigger)
4. Adjust VR715 and VR716 so that the moire is minimized at lower part of 1 ~ 1.5MHz.

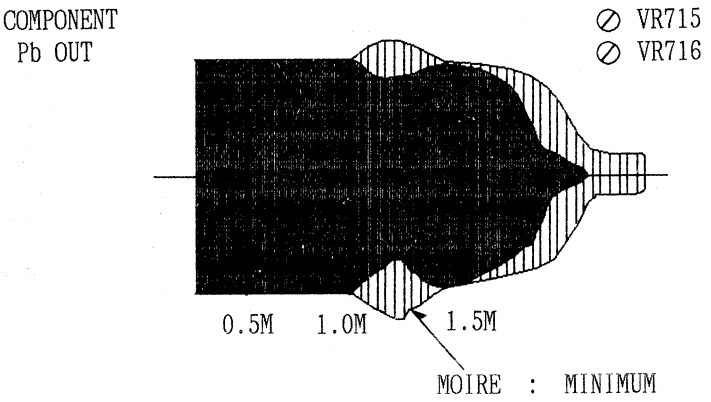

7-19-P. C DE-MODULATOR BALANCE ADJUSTMENT (FOR AU-65/63/62 PAL)

(W3 MOD & DEMOD)

TEST POINT	MODE	TAPE USED	M.EQ.	INPUT SIGNAL	ADJUSTMENT
COMPONENT Pb OUT F33·AB TERMINAL (Trigger)	PLAY	ALIGNMENT TAPE SWEEP	WAVE FORM MONITOR (TEK 1750)	----------	VR715 (LIM BAL) VR716 (DEMOD BAL)

<FOR AU-63/62>
1. SCOPE CH1 : COMPONENT Pb OUT
   SCOPE CH2 : F33·AB TERMINAL (Trigger)
2. Adjust VR715 and VR716 so that the moire is minimized at lower part of 1 ~ 1.5MHz.

<FOR AU-65>
1. Supply a Component 60% H. SWEEP signal to Component Input.
2. MODE : E-E
3. SCOPE CH1 : COMPONENT Pb OUT
   SCOPE CH2 : F33·AB (Trigger)
4. Adjust VR715 and VR716 so that the moire is minimized at lower part of 1 ~ 1.5MHz.

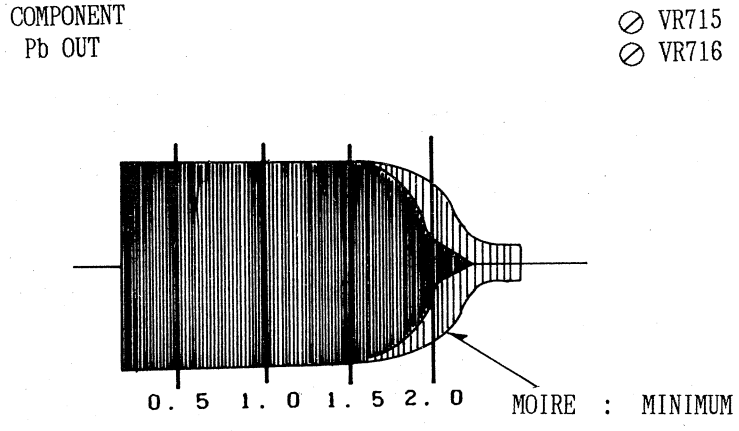

7-20. VIDEO CLIP ADJUSTMENT (FOR AU-65 NTSC & PAL)

(W3: MOD & DEMOD)

TEST POINT	MODE	TAPE USED	M.EQ.	INPUT SIGNAL	ADJUSTMENT
TP1	E-E (EJECT)	-------	WFM OR OSCILLOSCOPE	COMPONENT COLOR BAR LEVEL REFERENCE SIGNAL	VR3 (Y CLIP)

Step 1.

1. SCOPE : TP1

2. Adjust VR3 so that level B as shown in figure.

Note:
Measure from PEDESTAL LEVEL TO PEAK WHITE LEVEL.

TP1 ⊘ VR3

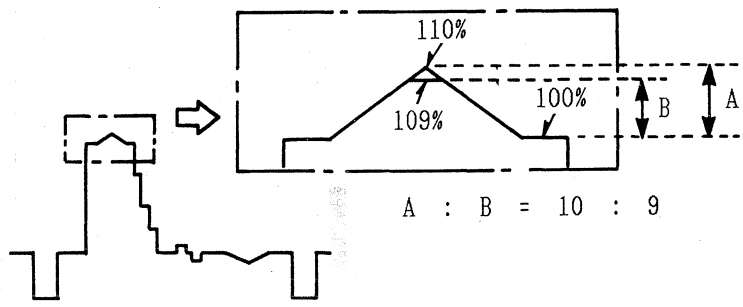

7-21-N. Y NON-LINEAR PRE-EMPHASIS LEVEL ADJUSTMENT (FOR AU-65 NTSC)

(W3 MOD & DEMOD)

TEST POINT	MODE	TAPE USED	M.EQ.	INPUT SIGNAL	ADJUSTMENT
TP1	E-E (EJECT)	-------	OSCILLOSCOPE	COMPONENT 75% COLOR BAR	VR1 (Y NLE LEV)

TP1 ⊘ VR1

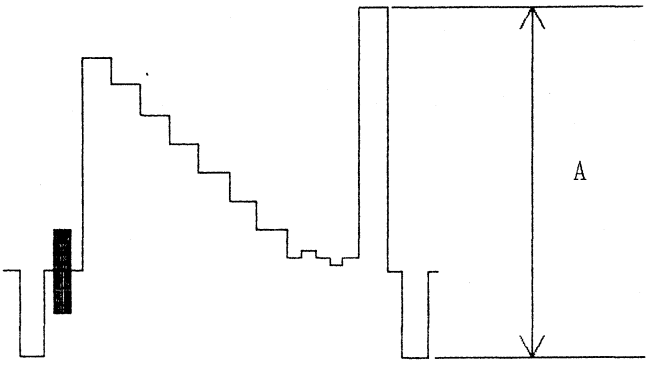

A = 2.45 ± 0.03Vp-p

7-21-P. Y NON-LINEAR PRE-EMPHASIS LEVEL ADJUSTMENT (FOR AU-65 PAL)

(W3 MOD & DEMOD)

TEST POINT	MODE	TAPE USED	M.EQ.	INPUT SIGNAL	ADJUSTMENT
TP 4	E-E (EJECT)	-------	OSCILLOSCOPE	COMPONENT COLOR BAR	VR1 (Y NLE LEV)

TP4 ⊘ VR1

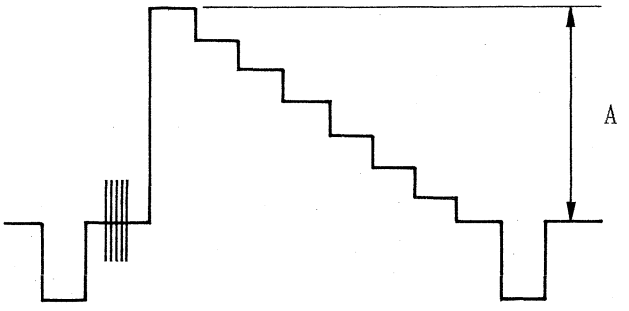

A = 1.1 ± 0.02Vp-p

7-22. VIDEO/SYNC METER ADJUSTMENT (FOR AU-65 NTSC & PAL)

(W3: MOD & DEMOD)

TEST POINT	MODE	TAPE USED	M.EQ.	INPUT SIGNAL	ADJUSTMENT
Video Level Meter (on Front Panel)	PLAY	COMPONENT 100% COLOR BAR	--------	--------	VR7 (V/S LEV.)

Step 1.

1. SW1 (on W3) : VIDEO POSITION
2. Adjust VR7 so that the meter indicates 100% as shown in figure.
3. SW1 (on W3) : SYNC POSITION
4. Confirm that the meter indicates 100 ± 10%.
5. SW1 (on W3) : VIDEO POSITION

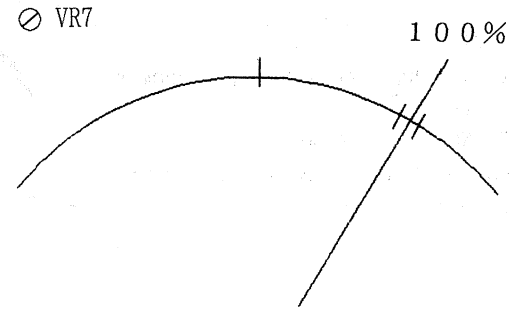

VIDEO/SYNC LEVEL METER

7-23-N. Y NL EMPHASIS LIMITER LEVEL ADJUSTMENT (FOR AU-65 NTSC)

(W3: MOD & DEMOD)

TEST POINT	MODE	TAPE USED	M.EQ.	INPUT SIGNAL	ADJUSTMENT
TP3	E-E (EJECT)	-------	OSCILLOSCOPE	COMPONENT 100% BOW TIE	VR5 (LIM BAL) VR4 (NL LIM LEV)

Step 1.

1. SCOPE : TP3
2. Adjust VR4 so that the level V1 becomes 340mV ± 5mVp-p.
3. SCOPE SETTING : DC mode
4. Adjust VR5 so that the level V2 equals the level V3 (50 - 50%).

TP3

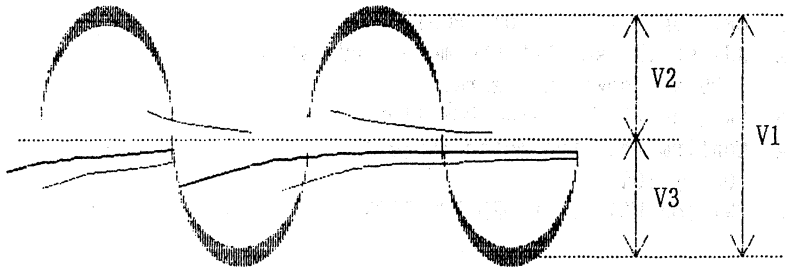

⊘ VR4 : V1 = 340mV ± 5mVp-p
⊘ VR5 : V2 = V3

7-23-P. Y NL EMPHASIS LIMITER LEVEL ADJUSTMENT (FOR AU-65 PAL)

(W3: MOD & DEMOD)

TEST POINT	MODE	TAPE USED	M.EQ.	INPUT SIGNAL	ADJUSTMENT
TP3	E-E (EJECT)	-------	OSCILLOSCOPE	COMPONENT 100% BOW TIE	VR5 (LIM BAL) VR4 (NL LIM LEV)

Step 1.

1. SCOPE : TP3
2. Adjust VR4 so that the level V1 becomes 360mV ± 5mVp-p.
3. SCOPE SETTING : DC mode
4. Adjust VR5 so that the level V2 equals the level V3 (50 - 50%).

TP3

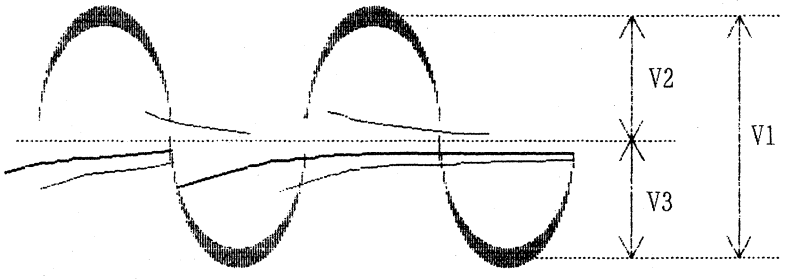

⊘ VR4 : V1 = 360mV ± 5mVp-p
⊘ VR5 : V2 = V3

7-24-N. C NON-LINEAR PRE-EMPHASIS LEVEL ADJUSTMENT (FOR AU-65 NTSC)

(W3 MOD & DEMOD)

TEST POINT	MODE	TAPE USED	M.EQ.	INPUT SIGNAL	ADJUSTMENT
TP201	E-E (EJECT)	-------	OSCILLOSCOPE	COMPONENT 75% COLOR BAR	VR201 (C NL LEV)

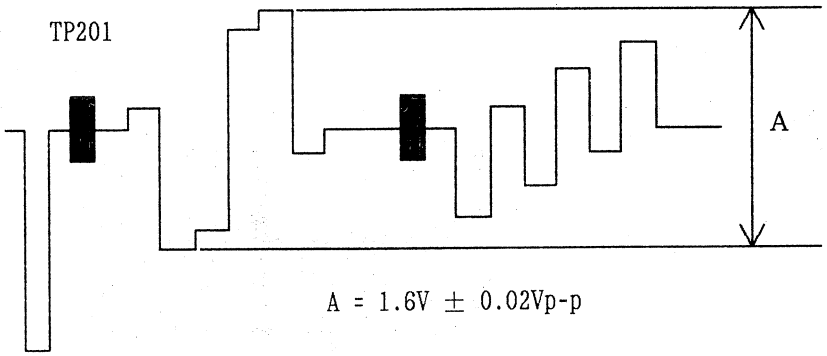

A = 1.6V ± 0.02Vp-p

7-24-P. C NON-LINEAR PRE-EMPHASIS LEVEL ADJUSTMENT (FOR AU-65 PAL)

(W3 MOD & DEMOD)

TEST POINT	MODE	TAPE USED	M.EQ.	INPUT SIGNAL	ADJUSTMENT
TP202	E-E (EJECT)	-------	OSCILLOSCOPE	COMPONENT 100% COLOR BAR	VR201 (C NL LEV)

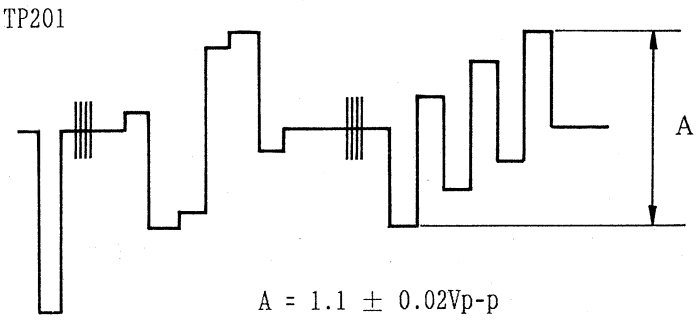

A = 1.1 ± 0.02Vp-p

7-25-N. C NON-LINEAR LIMITER ADJUSTMENT (FOR AU-65 NTSC)

(W3 MOD & DEMOD)

TEST POINT	MODE	TAPE USED	M.EQ.	INPUT SIGNAL	ADJUSTMENT
TP203	E-E (EJECT)	-------	OSCILLOSCOPE	COMPONENT 100% BOW TIE	VR202 (LIM BAL) VR203 (NL LIM LEV)

1. SCOPE : TP203
2. Observe the Pb signal of CTCM signal and expand the Time/Div of Pb signal.
3. Adjust VR203 so that the level V1 becomes 340mV ± 5mVp-p.
4. SCOPE SETTING : DC mode
5. Adjust VR202 so that the level V2 equals the level V3 (50 : 50%).

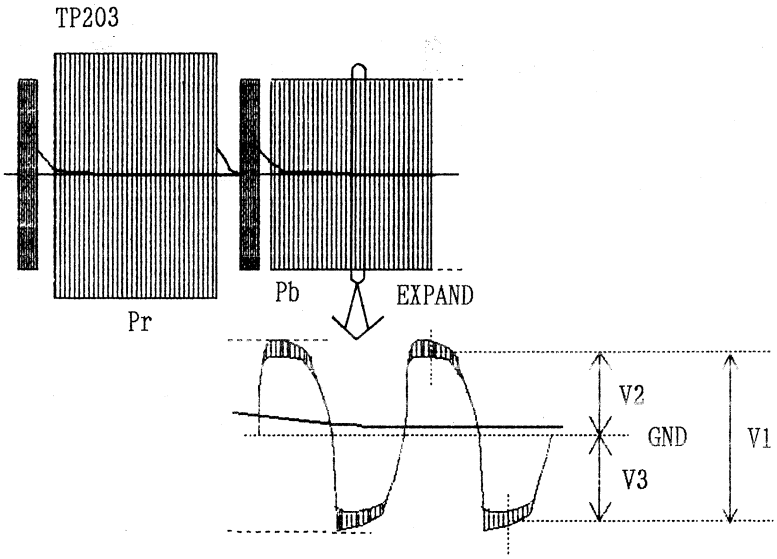

⊘ VR203 : V1 = 340mV ± 5mVp-p
⊘ VR202 : V2 = V3

7-25-P. C NON-LINEAR LIMITER ADJUSTMENT (FOR AU-65 PAL)

(W3 MOD & DEMOD)

TEST POINT	MODE	TAPE USED	M.EQ.	INPUT SIGNAL	ADJUSTMENT
TP203	E-E (EJECT)	-------	OSCILLOSCOPE	COMPONENT 100% BOW TIE	VR202 (LIM BAL) VR203 (NL LIM LEV)

1. SCOPE : TP203
2. Observe the CTCM signal and expand it.
3. Adjust VR203 so that the level V1 becomes 400mV ± 5mVp-p.
4. SCOPE SETTING : DC mode
5. Adjust VR202 so that the level V2 equals the level V3 (50 : 50%).

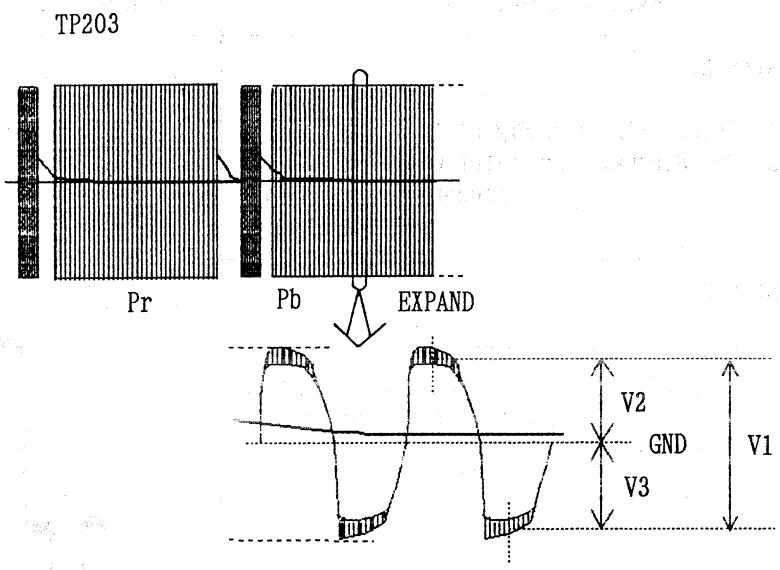

⊘ VR203 : V1 = 400mV ± 5mVp-p
⊘ VR202 : V2 = V3

7-26-N. Y FM DEVIATION ADJUSTMENT (FOR AU-65 NTSC)

(W3 MOD & DEMOD)

TEST POINT	MODE	TAPE USED	M.EQ.	INPUT SIGNAL	ADJUSTMENT
TP316 TP309	E-E (EJECT)	-------	OSCILLOSCOPE	COMPONENT 75% COLOR BAR	VR8 (DARK CLIP) VR10 (WHITE CLIP) VR6 (Y DEV.) VR9 (Y SYNC TIP FREQ.)

Step 1. MACHINE CONDITION	VR8 : Fully Counterclockwise (To release clip) VR10 : Fully Counterclockwise (To release clip)
Step 2. 1. Inject Sinewave Signal to TP316 2. Set Sinewave Generator Output Frequency Setting To :	5.6 MHz ± 0.01 MHz (0.2 ~ 0.4Vp-p)
Step 3. 1. Connect scope to TP309 2. Adjust VR9 so that frequency beat noise is nullified at sync tip portion as shown in figure 1.	TP309 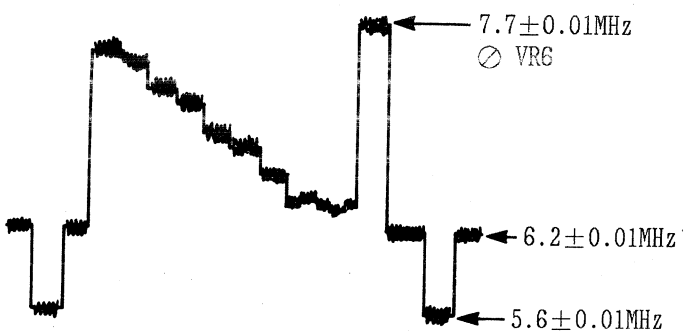 Figure 1
Step 4. <SYNC TIP ADJ.> Change Sinewave Generator Output Frequency Setting To :	7.7 MHz ± 0.01 MHz (0.2 ~ 0.4Vp-p)
Step 5. 1. Adjust VR6 so that frequency beat noise is nullified at white peak portion as shown in figure 1.	
Step 6. 1. After this adjustment, the video Clip, White/Dark Clip and Y Modulator Balance Adjustments are required.	Go to SECTION 5-24

7-26-P. Y FM DEVIATION ADJUSTMENT (FOR AU-65 PAL)

(W3 MOD & DEMOD)

TEST POINT	MODE	TAPE USED	M.EQ.	INPUT SIGNAL	ADJUSTMENT
TP316 TP309	E-E (EJECT)	-------	OSCILLOSCOPE	COMPONENT COLOR BAR	VR8 (DARK CLIP) VR10 (WHITE CLIP) VR6 (Y DEV.) VR9 (Y SYNC TIP FREQ.)

Step 1. MACHINE CONDITION	VR8 : Fully Counterclockwise (To release clip) VR10 : Fully Counterclockwise (To release clip)
Step 2. 1. Inject Sinewave Signal to TP316 2. Set Sinewave Generator Output Frequency Setting To :	6.63 MHz ± 0.01 MHz (0.2 ~ 0.4Vp-p)
Step 3. 1. Connect scope to TP309 2. Adjust VR9 so that frequency beat noise is nullified at sync tip portion as shown in figure 1.	TP309 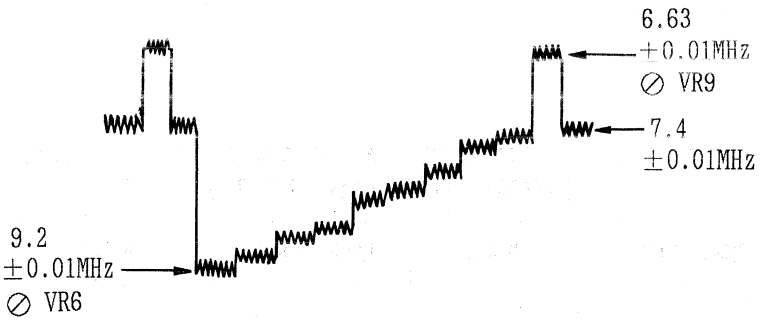 Figure 1
Step 4. <SYNC TIP ADJ.> Change Sinewave Generator Output Frequency Setting To :	9.2 MHz ± 0.01 MHz (0.2 ~ 0.4Vp-p)
Step 5. 1. Adjust VR6 so that frequency beat noise is nullified at white peak portion as shown in figure 1.	
Step 6. 1. After this adjustment, the video Clip, White/Dark Clip and Y Modulator Balance Adjustments are required.	Go to SECTION 5-24

7-27-N. Y WHITE & DARK CLIP ADJUSTMENT (FOR AU-65 NTSC)

(W3 MOD & DEMOD)

TEST POINT	MODE	TAPE USED	M.EQ.	INPUT SIGNAL	ADJUSTMENT
TP 5	E-E (EJECT)	-------	OSCILLOSCOPE	COMPONENT Sin2 2T PULSE & BAR	VR10 (WHITE CLIP) VR 8 (DARK CLIP)

Step 1.

1. SCOPE : TP 5
2. Adjust VR10 so that the 2T Pulse (Positive spike) level (A) becomes 280% ± 5% as shown in figure.
3. Adjust VR8 so that the 2T Pulse (Negative spike) level (B) becomes 180% ± 5% as shown in figure.

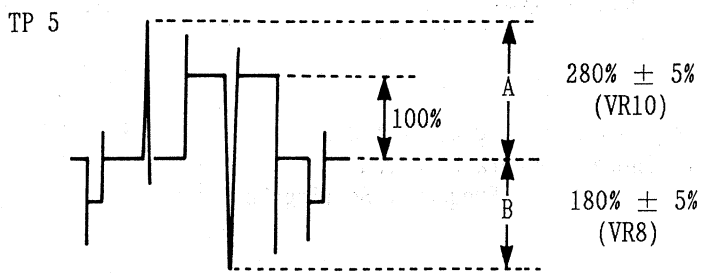

7-27-P. Y WHITE & DARK CLIP ADJUSTMENT (FOR AU-65 PAL)

(W3 MOD & DEMOD)

TEST POINT	MODE	TAPE USED	M.EQ.	INPUT SIGNAL	ADJUSTMENT
TP 5	E-E (EJECT)	-------	OSCILLOSCOPE	COMPONENT Sin2 2T PULSE & BAR	VR10 (WHITE CLIP) VR 8 (DARK CLIP)

Step 1.

1. SCOPE : TP 5
2. Adjust VR10 so that the 2T Pulse (Positive spike) level (A) becomes 260% ± 5% as shown in figure.
3. Adjust VR8 so that the 2T Pulse (Negative spike) level (B) becomes 170% ± 5% as shown in figure.

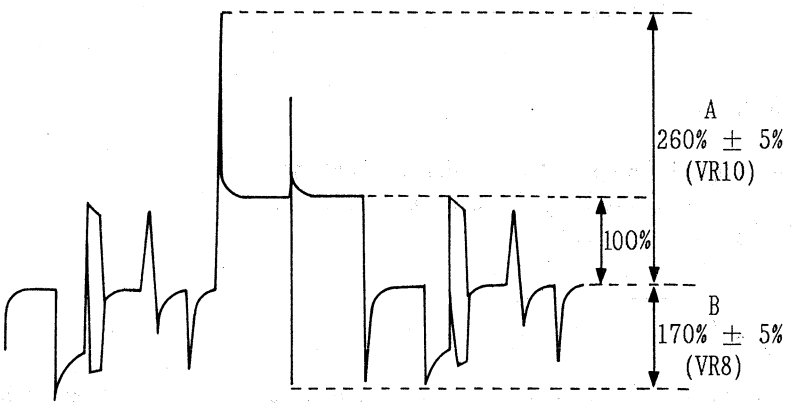

7-28-N(A). Y MODULATOR BALANCE ADJUSTMENT (BY USING SPECTRUM ANALYZER) (FOR AU-65 NTSC)

(W3 MOD & DEMOD)

TEST POINT	MODE	TAPE USED	M.EQ.	INPUT SIGNAL	ADJUSTMENT
TP7	E-E (EJECT)	-------	SPECTRUM ANALYZER	COMPONENT 50% WHITE	VR11 (Y MOD BAL)

1. Adjust VR11 so that the second harmonic (13.9 MHz) carrier level is minimized (Better than -38dB)

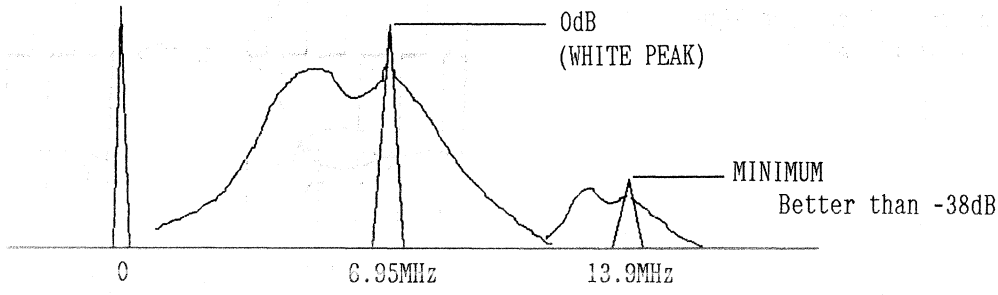

⊘ VR11 : 13.9MHz···MINIMUM

7-28-P(A). Y MODULATOR BALANCE ADJUSTMENT (BY USING SPECTRUM ANALYZER) (FOR AU-65 PAL)

(W3 MOD & DEMOD)

TEST POINT	MODE	TAPE USED	M.EQ.	INPUT SIGNAL	ADJUSTMENT
TP7	E-E (EJECT)	-------	SPECTRUM ANALYZER	COMPONENT 50% WHITE	VR11 (Y MOD BAL)

1. Adjust VR11 so that the second harmonic (16.6 MHz) carrier level is minimized (Better than -38dB)

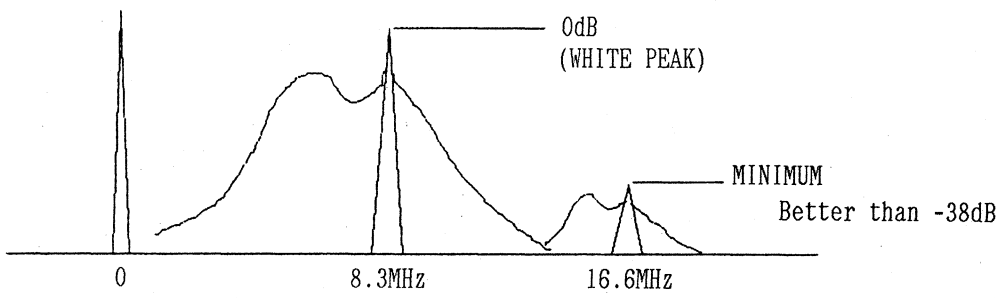

⊘ VR11 : 16.6MHz···MINIMUM

7-28(B). Y MODULATOR BALANCE ADJUSTMENT (BY USING OSCILLOSCOPE) (FOR AU-65 NTSC & PAL)

(W3 MOD & DEMOD)

TEST POINT	MODE	TAPE USED	M.EQ.	INPUT SIGNAL	ADJUSTMENT
COMPONENT Y OUT	E-E (EJECT)	-------	OSCILLOSCOPE	COMPONENT 60% H. SWEEP	VR11 (Y MOD BAL)

Step 1.

1. SCOPE : COMPONENT Y OUT

2. Adjust VR11 so the "A" portion High Frequency moire is minimized.

COMPONENT Y OUT

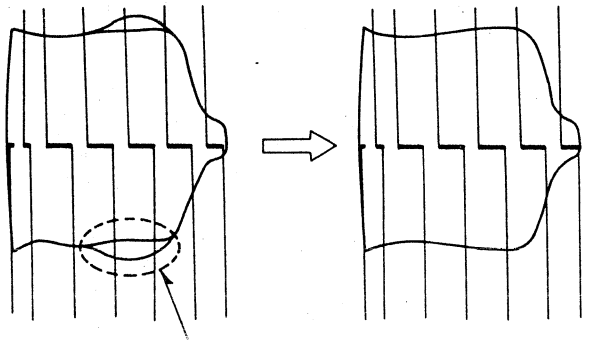

7-29-N. Y DEVIATION CONFIRMATION (FOR AU-65 NTSC)

(W3 MOD & DEMOD)

TEST POINT	MODE	TAPE USED	M.EQ.	INPUT SIGNAL	ADJUSTMENT
TP309	PLAY ↓ STOP	ALIGNMENT TAPE 75% COLOR BAR	OSCILLOSCOPE	COMPONENT 75% COLOR BAR	VR6 (Y DEV)

Step 1.

1. SCOPE : TP309
2. Play back the color bar portion of the Alignment Tape.
3. Measure the level A.
4. Place the unit in the E-E mode. (STOP)
5. Compare the level A of Alignment Tape Play back signal and the level B of E-E color bar.
6. If it is not same level *, adjust VR6 so that the E-E output level (B) becomes same level of Alignemtn Tape Play back color bar level (A).

*Note:
Make sure the Y WHITE & DARK CLIP are readjusted (7-27-N).

TP309

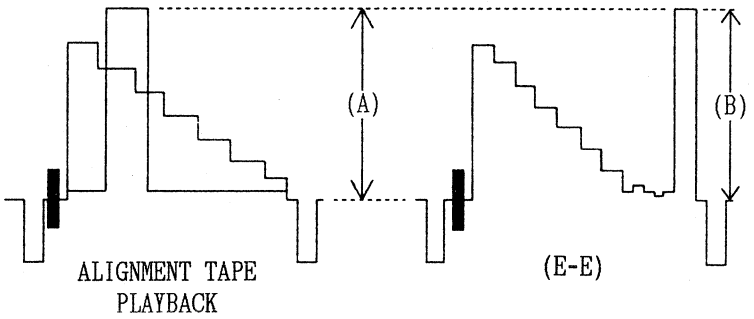

ALIGNMENT TAPE PLAYBACK SIGNAL LEVEL (A)
= E-E OUTPUT SIGNAL LEVEL (B)

7-29-P. Y DEVIATION CONFIRMATION (FOR AU-65 PAL)

(W3 MOD & DEMOD)

TEST POINT	MODE	TAPE USED	M.EQ.	INPUT SIGNAL	ADJUSTMENT
TP309	PLAY ↓ STOP	ALIGNMENT TAPE COLOR BAR	OSCILLOSCOPE	COMPONENT 100% COLOR BAR	VR6 (Y DEV)

Step 1.

1. SCOPE : TP309
2. Play back the color bar portion of the Alignment Tape.
3. Measure the level A.
4. Place the unit in the E-E mode. (STOP)
5. Compare the level of Alignment Tape Play back signal and the level of E-E color bar.
6. If it is not same level *, adjust VR6 so that the E-E output level becomes same level of Alignment Tape Play back color bar level.

*Note:
Make sure the Y WHITE & DARK CLIP are readjusted (7-27-P).

TP309

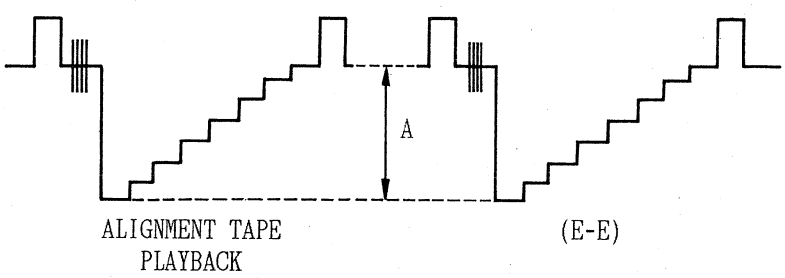

ALIGNMENT TAPE PLAYBACK SIGNAL LEVEL (A)
= E-E OUTPUT SIGNAL LEVEL (B)

7-30. C CLAMP PULSE POSITION ADJUSTMENT (FOR AU-65 NTSC & PAL)

(W3 MOD & DEMOD)

TEST POINT	MODE	TAPE USED	M.EQ.	INPUT SIGNAL	ADJUSTMENT
TP201 TP204	E-E (EJECT)	-------	OSCILLOSCOPE	COMPONENT 75% (NTSC) 100% (PAL) COLOR BAR	VR205 (C CLAMP POS)

Step 1.

MACHINE CONDITION

1. INPUT SELECT : COMPONENT
   (on Pull Out Drawer)
2. YC/COMPONENT SELECT : COMPONENT
   (on Front Sub Panel)
3. SW201 : NOT TEST POSITION

Step 2.

1. SCOPE CH1 : TP201
   SCOPE CH2 : TP204

2. Adjust VR205 so that the period (A) is $0.7 \pm 0.1\mu$sec.

3. Confirm that the pulse width (B) is $1.2 \pm 0.2\mu$sec.
   color bar level (A).

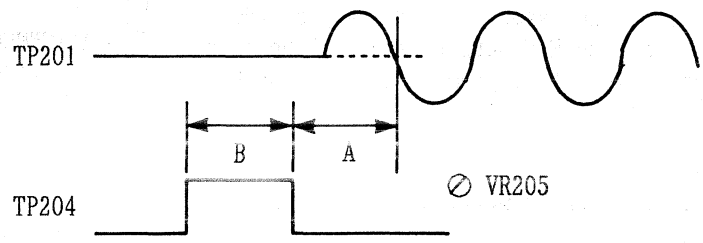

A = $0.7 \pm 0.1\mu$S (ADJ)
B = $1.2 \pm 0.2\mu$S (CONFIRMATION)

7-31-N. C FM DEVIATION ADJUSTMENT (FOR AU-65 NTSC)

(W3 MOD & DEMOD)

TEST POINT	MODE	TAPE USED	M.EQ.	INPUT SIGNAL	ADJUSTMENT
TP711 TP706	E-E (EJECT)	-------	OSCILLOSCOPE	Y/CTCM COLOR BAR	VR207 (DARK CLIP) VR208 (WHITE CLIP) VR204 (C DEV.) VR206 (C BLK FREQ)

Step 1. MACHINE CONDITION	VR207 : Fully Counterclockwise (To release clip) VR208 : Fully Counterclockwise (To release clip)
Step 2. 1. Sinewave Signal to TP711. 2. Set Sinewave Generator Out put Frequency Setting To :	5.5 MHz ± 0.01 MHz (0.2 ~ 0.4 Vp-p)
Step 3. 1. Connect scope to TP706 2. Adjust VR206 so that frequency beat noise is nullified at blanking portion as shown in figure.	TP706 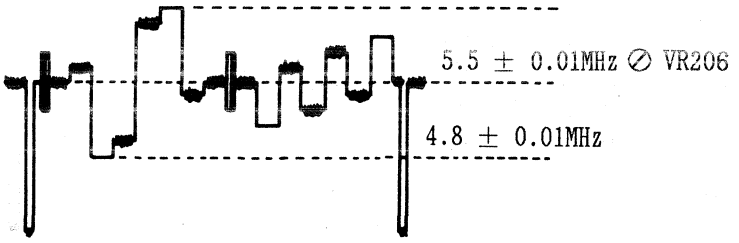
Step 4. Change Sinewave Generator Output Frequency Setting To :	6.2MHz ± 0.01MHz (0.2 ~ 0.4Vp-p)
Step 5. 1. Adjust VR204 so that frequency beat noise is nullified at red portion of Pr signal as shown in figure 1.	
Step 6. Then change the frequency of the sinewave generator to 4.8MHz (±0.01KHz) and confirm that the beat does not occur at cyan portion of Pr signal. If it is not, repeat from steps 5 and 6.	
Note: After this adjustment, the C WHITE/DARK CLIP adjustments are required.	Go to SECTION 5-29

7-31-P. C FM DEVIATION ADJUSTMENT (FOR AU-65 PAL)

(W3 MOD & DEMOD)

TEST POINT	MODE	TAPE USED	M.EQ.	INPUT SIGNAL	ADJUSTMENT
TP711 TP706	E-E (EJECT)	-------	OSCILLOSCOPE	Y/CTCM COLOR BAR	VR207 (DARK CLIP) VR208 (WHITE CLIP) VR204 (C DEV.) VR206 (C BLK FREQ)

Step 1. MACHINE CONDITION	VR207 : Fully Counterclockwise (To release clip) VR208 : Fully Counterclockwise (To release clip)
Step 2. 1. Sinewave Signal to TP711. 2. Set Sinewave Generator Out put Frequency Setting To :	6.2 MHz ± 0.01 MHz (0.2 ~ 0.4 Vp-p)
Step 3. 1. Connect scope to TP706 2. Adjust VR206 so that frequency beat noise is nullified at blanking portion as shown in figure.	TP706 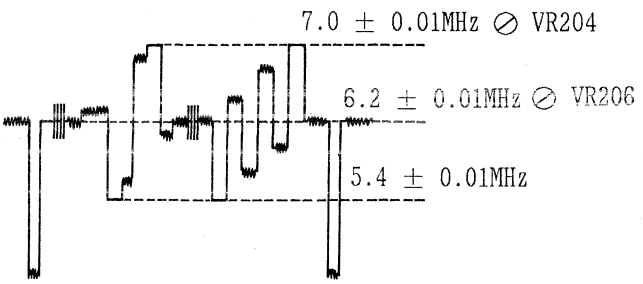
Step 4. Change Sinewave Generator Output Frequency Setting To :	7.0MHz ± 0.01MHz (0.2 ~ 0.4Vp-p)
Step 5. 1. Adjust VR204 so that frequency beat noise is nullified at red portion of Pr signal as shown in figure 1.	
Step 6. Then change the frequency of the sinewave generator to 4.8MHz (±0.01KHz) and confirm that the beat does not occur at cyan portion of Pr signal. If it is not, repeat from steps 5 and 6.	
Note: After this adjustment, the C WHITE/DARK CLIP adjustments are required.	Go to SECTION 5-29

7-32-N. C WHITE & DARK CLIP ADJUSTMENT (FOR AU-65 NTSC)

(W3 MOD & DEMOD)

TEST POINT	MODE	TAPE USED	M.EQ.	INPUT SIGNAL	ADJUSTMENT
TP205	E-E (EJECT)	-------	OSCILLOSCOPE	COMPONENT 75% COLOR BAR	VR208 (⊕ CLIP) VR207 (⊖ CLIP)

Step 1.

1. SCOPE : TP205
2. Adjust VR208 so that the A portion is 147.5% ± 5% as shown in figure.
3. Adjust VR207 so that the B portion is 180% ± 5% as shown in figure.

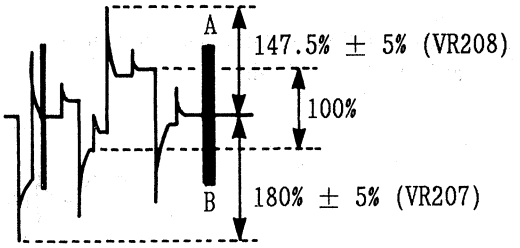

7-32-P. C WHITE & DARK CLIP ADJUSTMENT (FOR AU-65 PAL)

(W3 MOD & DEMOD)

TEST POINT	MODE	TAPE USED	M.EQ.	INPUT SIGNAL	ADJUSTMENT
TP205	E-E (EJECT)	-------	OSCILLOSCOPE	PULSE & BAR 3T 60% H SWEEP	VR208 (⊕ CLIP) VR207 (⊖ CLIP)

Step 1.

1. SCOPE : TP205
2. Adjust VR208 so that the A portion (top of sweep marker) 200 ± 5% as shown in figure .
3. Adjust VR207 so that the B portion is 200% ± 5% as shown in figure.

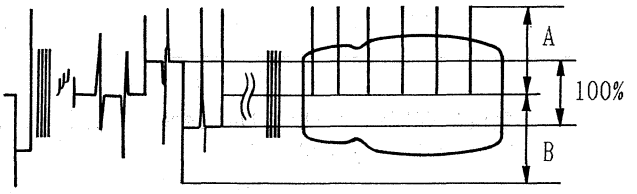

A = 200% ± 5% (VR208)
B = 200% ± 5% (VR207)

7-33-N(A). C MODULATOR BALANCE ADJUSTMENT (BY USING SPECTRAM ANALYZER) (FOR AU-65 NTSC)

(W3 MOD & DEMOD)

TEST POINT	MODE	TAPE USED	M.EQ.	INPUT SIGNAL	ADJUSTMENT
TP207	E-E (EJECT)	-------	SPECTRUM ANALYZER	COMPONENT 50% WHITE	VR209 (C MOD BAL)

1. Adjust VR209 so that the second harmonic (11.0 MHz) carrier level is minimized (Better than -40dB)

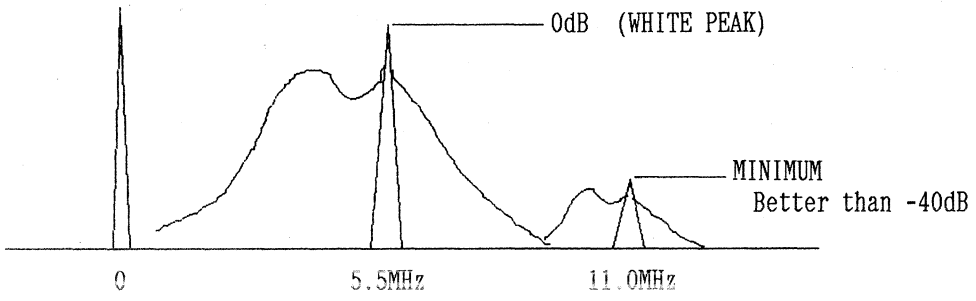

⊘ VR209 : 11.0MHz···MINIMUM

7-33-P(A). C MODULATOR BALANCE ADJUSTMENT (BY USING SPECTRAM ANALYZER) (FOR AU-65 PAL)

(W3 MOD & DEMOD)

TEST POINT	MODE	TAPE USED	M.EQ.	INPUT SIGNAL	ADJUSTMENT
TP207	E-E (EJECT)	-------	SPECTRUM ANALYZER	COMPONENT 50% WHITE	VR209 (C MOD BAL)

1. Adjust VR209 so that the second harmonic (12.4 MHz) carrier level is minimized (Better than -40dB)

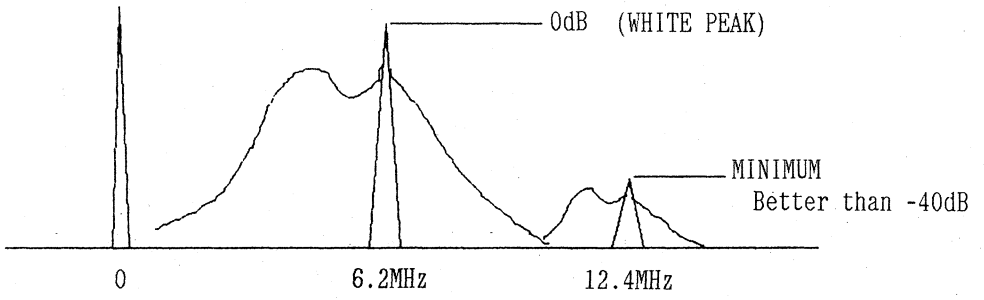

⊘ VR209 : 12.4MHz···MINIMUM

7-33(B). C MODULATOR BALANCE ADJUSTMENT (BY USING OSCILLOSCOPE) (FOR AU-65 NTSC & PAL)

(W3 MOD & DEMOD)

TEST POINT	MODE	TAPE USED	M.EQ.	INPUT SIGNAL	ADJUSTMENT
COMPONENT Pr/Pb OUT	E-E (EJECT)	-------	OSCILLOSCOPE	COMPONENT 60% H. SWEEP	VR209 (C MOD BAL)

Step 1.

1. SCOPE : COMPONENT Pr/Pb OUT

2. Adjust VR209 so the "A" portion High Frequency moire is minimized.

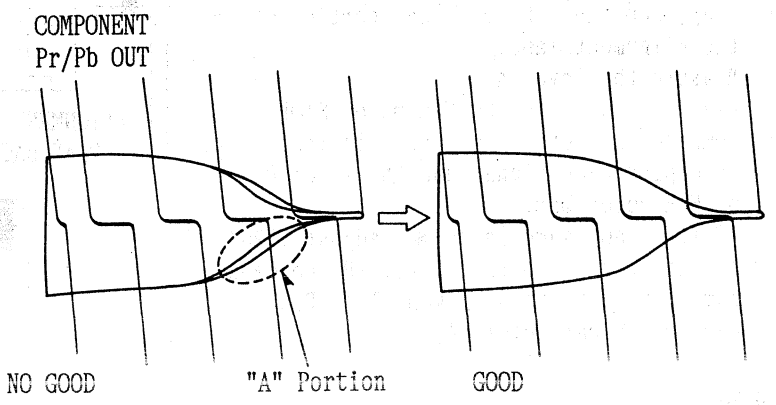

7-34-N. C DEVIATION CONFIRMATION (FOR AU-65 NTSC)

(W3 MOD & DEMOD)

TEST POINT	MODE	TAPE USED	M.EQ.	INPUT SIGNAL	ADJUSTMENT
TP706	PLAY ↓ STOP	ALIGNMENT TAPE COLOR BAR	OSCILLOSCOPE	COMPONENT 75% COLOR BAR	VR204 (C DEV)

Step 1.

1. SCOPE : TP706
2. Play back the 75% color bar portion of the Alignment Tape.
3. Measure the level A.
4. Place the unit in the E-E mode (STOP).
5. Compare the level A of the Alignment Tape play back signal and the level B of E-E color bar.
6. If it is not same level *, adjust VR204 so that the E-E output level (B) becomes same level of the Alignment Tape Play back color bar level (A).

*Note:
Make sure the C WHITE & DARK CLIP are adjusted (7-32-N).

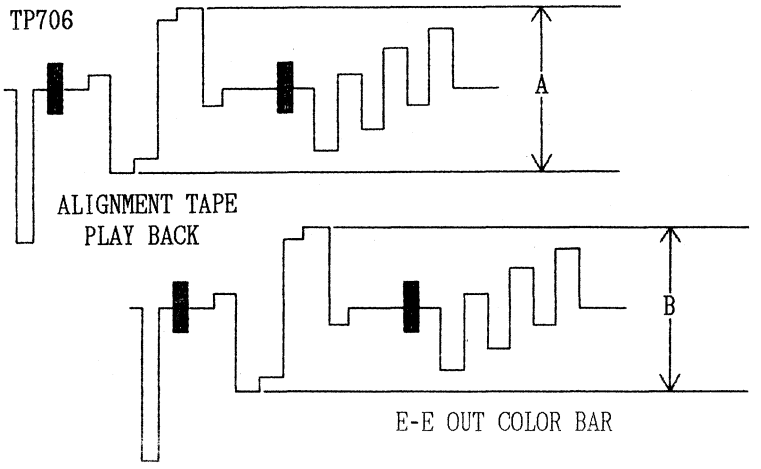

ALIGNMENT TAPE PLAYBACK SIGNAL LEVEL (A)
= E-E OUTPUT SIGNAL LEVEL (B)

7-34-P. C DEVIATION CONFIRMATION (FOR AU-65 PAL)

(W3 MOD & DEMOD)

TEST POINT	MODE	TAPE USED	M.EQ.	INPUT SIGNAL	ADJUSTMENT
TP706	PLAY ↓ STOP	ALIGNMENT TAPE COLOUR BAR	OSCILLOSCOPE	COMPONENT 100% COLOUR BAR	VR204 (C DEV)

Step 1.

1. SCOPE : TP706
2. Play back the 100% colour bar portion of the Alignment Tape.
3. Measure the level A.
4. Place the unit in the E-E mode (STOP).
5. Compare the level A of the Alignment Tape play back signal and the level B of E-E colour bar.
6. If it is not same level *, adjust VR204 so that the E-E output level (B) becomes same level of the Alignment Tape Play back colour bar level (A).

*Note:
Make sure the C WHITE & DARK CLIP are adjusted (7-32-P).

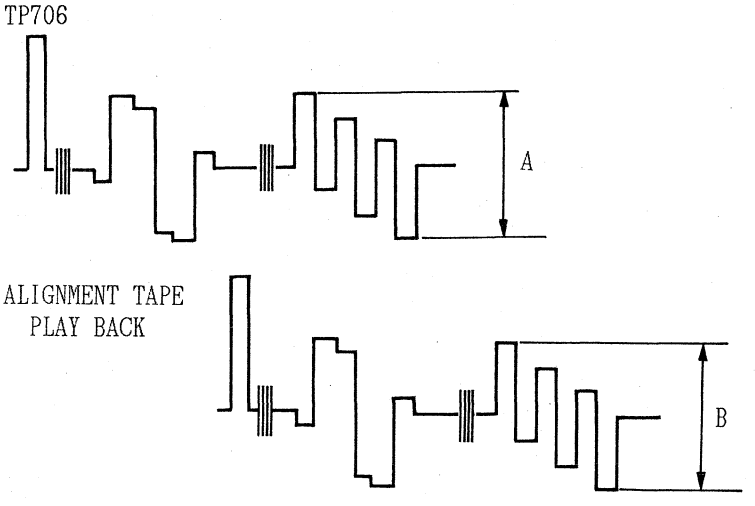

ALIGNMENT TAPE PLAYBACK SIGNAL LEVEL (A)
= E-E OUTPUT SIGNAL LEVEL (B)

7-35(A). C REC FM B.P.F. FREQUENCY RESPONSE ADJUSTMENT (FACTORY ADJ.)(FOR AU-65 NTSC & PAL)

TEST POINT	MODE	TAPE USED	M.EQ.	INPUT SIGNAL	ADJUSTMENT
TP206 TPG202 TP207	E-E (EJECT)	-------	OSCILLOSCOPE	LINE SWEEP (0.1MHz ~ 12MHz) Shibasoku TO TP206 (HOT) TPG202 (GND)	VL201 (C REC BPF F.R.)

Step 1.
MACHINE CONDITION

SW202 (on W3) : TEST POSITION
TJ201 (on W3) : OPEN CONTACT

Step 2.

1. Supply a Line Sweep Signal (0.1MHz ~ 12MHz, 500mVp-p at TP207 to TP206 (HOT) and TPG202 (GND).
2. SCOPE CH1 : TP207
   SCOPE CH2 : Trigger from Generator
3. Adjust VL201 so that the trap frequency (A) of line sweep becomes
   NTSC 7.0 ± 0.1MHz
   PAL 9.0 ± 0.1MHz
4. SW202 (on W3) : NOT TEST POSITION
   TJ201 (on W3) : CLOSE CONTACT

TP207 ⊘ VL201

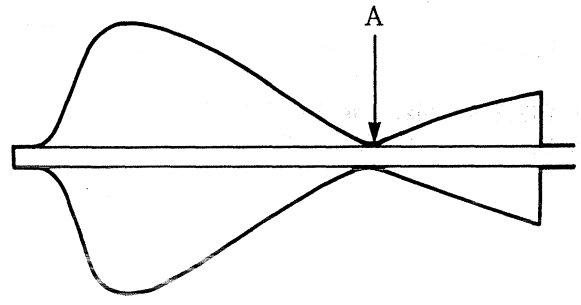

NTSC A = 7.0 ± 0.1MHz
PAL A = 9.0 ± 0.1MHz

7-35(B). C REC FM B.P.F. FREQUENCY RESPONSE ADJUSTMENT (FIELD ADJ.)(FOR AU-65 NTSC & PAL)

TEST POINT	MODE	TAPE USED	M.EQ.	INPUT SIGNAL	ADJUSTMENT
TP207 TP206 TP302	PLAY	ALIGNMENT TAPE RF SWEEP (0 ~ 12 MHz)	OSCILLOSCOPE	----------	VL201 (C REC BPF F.R.)

Step 1.
MACHINE CONDITION

SW202 (on W3) : TEST POSITION
TJ201 (on W3) : OPEN CONTACT

Step 2.

1. Connect a jumper wire between TP302 and TP206.
2. Play back the RF SWEEP portion of the Alignment Tape.
3. SCOPE : TP207
4. Adjust VL201 so that the trap frequency (A) of line sweep becomes
   NTSC 7.0 ± 0.1MHz
   PAL 9.0 ± 0.1MHz
5. SW202 (on W3) : NOT TEST POSITION
   TJ201 (on W3) : CLOSE CONTACT

TP207 ⊘ VL201

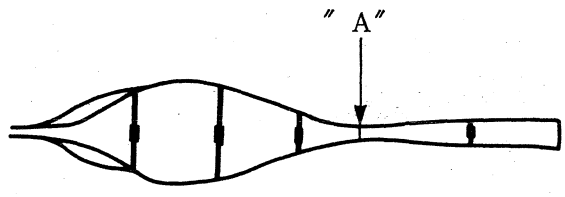

7-36-N.Y NON LINEAR DE-EMPHASIS LIMITER LEVEL ADJUSTMENT (FOR AU-65 NTSC)

(W3: MOD & DEMOD)

TEST POINT	MODE	TAPE USED	M.EQ.	INPUT SIGNAL	ADJUSTMENT
TP310	E-E (EJECT)	-------	OSCILLOSCOPE	COMPONENT 100% BOW TIE	VR323 (NL LIM BAL) VR324 (NL LIM LEV)

1. SCOPE : TP310
2. Adjust VR324 so that the level V1 becomes 340mV ± 5mVp-p.
3. SCOPE SETTING : DC mode
4. Adjust VR323 so that the level V2 equals the level V3 (50 : 50%).

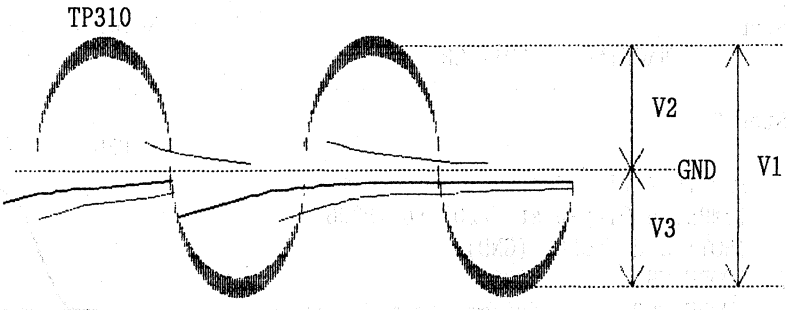

⊘ VR324 : V1 = 340mV ± 5mVp-p
⊘ VR323 : V2 = V3

7-36-P.Y NON LINEAR DE-EMPHASIS LIMITER LEVEL ADJUSTMENT (FOR AU-65 PAL)

(W3: MOD & DEMOD)

TEST POINT	MODE	TAPE USED	M.EQ.	INPUT SIGNAL	ADJUSTMENT
TP310	E-E (EJECT)	-------	OSCILLOSCOPE	COMPONENT 100% BOW TIE	VR323 (NL LIM BAL) VR324 (NL LIM LEV)

1. SCOPE : TP310
2. Adjust VR324 so that the level V1 becomes 360mV ± 5mVp-p.
3. SCOPE SETTING : DC mode
4. Adjust VR323 so that the level V2 equals the level V3 (50 : 50%).

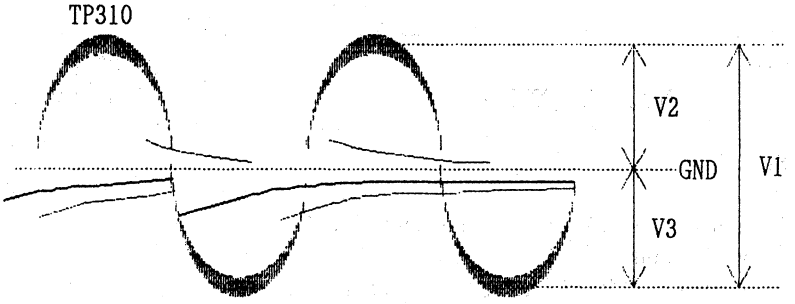

⊘ VR324 : V1 = 360mV ± 5mVp-p
⊘ VR323 : V2 = V3

7-37-N. C NON LINEAR DE-EMPHASIS LIMITER ADJUSTMENT (FOR AU-65 NTSC)

(W3 MOD & DEMOD)

TEST POINT	MODE	TAPE USED	M.EQ.	INPUT SIGNAL	ADJUSTMENT
TP707	E-E (EJECT)	-------	OSCILLOSCOPE	COMPONENT 100% BOW TIE	VR720 (LIM BAL) VR721 (NL LIM LEV)

1. Observe the Pb signal of CTCM signal and exapand the Time/Div. of Pb signal.
2. Adjust VR721 so that the level V1 becomes 340mV ± 5mVp-p.
3. SCOPE SETTING : DC mode
4. Adjust VR720 so that the level V2 equals the level V3 (50 : 50%).

TP309

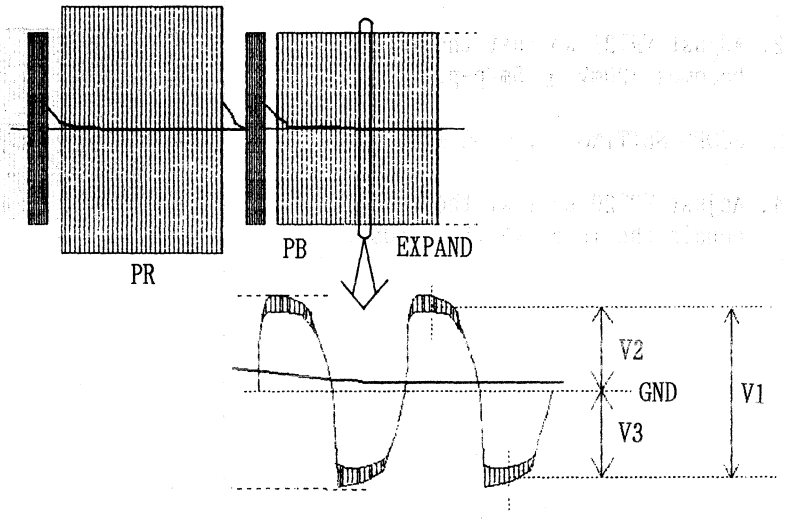

⊘ VR721 : V1 = 340mV ± 5mVp-p
⊘ VR720 : V2 = V3

7-37-P. C NON LINEAR DE-EMPHASIS LIMITER ADJUSTMENT (FOR AU-65 PAL)

(W3 MOD & DEMOD)

TEST POINT	MODE	TAPE USED	M.EQ.	INPUT SIGNAL	ADJUSTMENT
TP707	E-E (EJECT)	-------	OSCILLOSCOPE	COMPONENT 100% BOW TIE	VR720 (LIM BAL) VR721 (NL LIM LEV)

1. Observe the CTCM signal and expand it.
2. Adjust VR721 so that the level V1 becomes 400mV ± 5mVp-p.
3. SCOPE SETTING : DC mode
4. Adjust VR720 so that the level V2 equals the level V3 (50 : 50%).

TP309

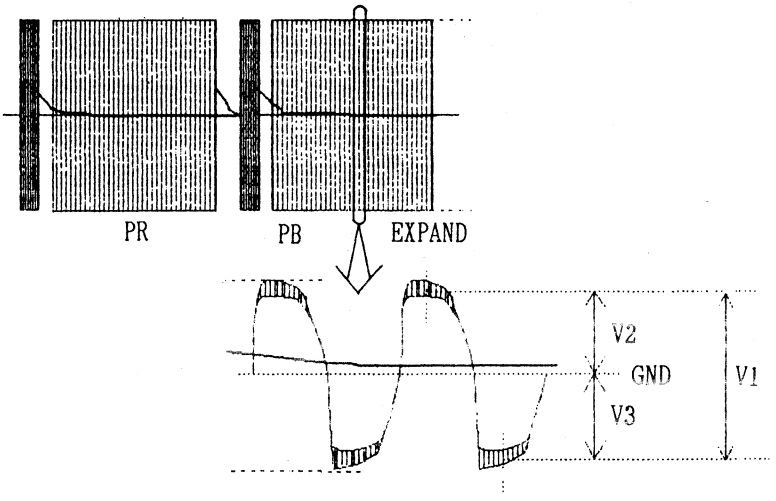

⊘ VR721 : V1 = 400mV ± 5mVp-p
⊘ VR720 : V2 = V3

7-38-P. Y PLAYBACK GROUP DELAY EQ ADJUSTMENT (FOR AU-65/63/62 PAL)

(W3 MOD & DEMOD)

TEST POINT	MODE	TAPE USED	M.EQ.	INPUT SIGNAL	ADJUSTMENT
TP309	PALY	ALIGNMENT SWEEP	OSCILLOSCOPE	---------	VL302

Note: This adjustment is PAL model only. Step 1. 1. Open the jumper TJ302.	TJ302 → OPEN
Step 2. 1. Adjust VL302 so that trap frequency (A) is 4.5 ± 0.1MHz.	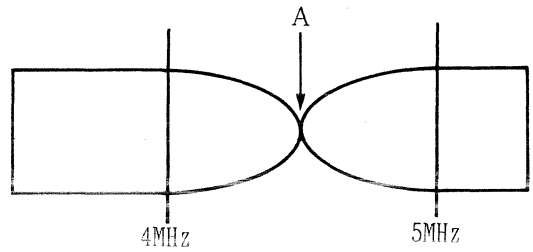 A = 4.5 ± 0.1 MHz
Step 3. 1. After this adjustment short the jumper TJ302.	TJ302 → SHORT

7-39-N. Y PLAYBACK FREQUENCY RESPONSE ADJUSTMENT (COARSE) (FOR AU-62/AU-65 NTSC)

(W3: MOD & DEMOD)

TEST POINT	MODE	TAPE USED	M.EQ.	INPUT SIGNAL	ADJUSTMENT
TP309 F29·AB EDGE CONNECTOR (Trigger)	PLAY	ALIGNMENT TAPE SWEEP	OSCILLOSCOPE	-------	VR315 R/P 1 (CH1) VR316 R/P 2 (CH2)

1. SCOPE CH1 : TP309
   SCOPE CH2 : F29·AB EDGE CONNECTOR (Trigger)
2. SCOPE SETTING : Trigger Slope (+)
3. Adjust VR315 so that the Y R/P CH1 frequency response is 95% ± 10% at 4.0MHz portion.
4. SCOPE SETTING : Trigger Slope (-)
5. Adjust VR316 so that the Y R/P CH2 frequency response is 95% ± 10% at 4.0MHz portion.

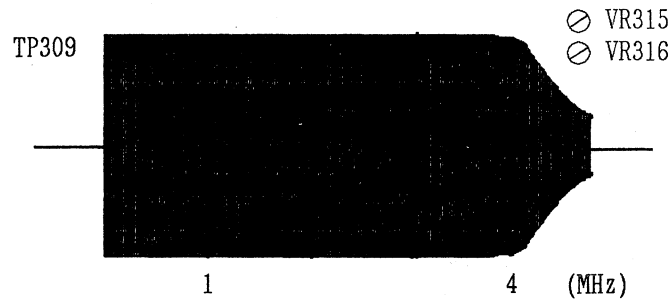

REF : 0.5MHz = 100%
SPEC : 4MHz - 95% ± 10%

7-39-P. Y PLAYBACK FREQUENCY RESPONSE ADJUSTMENT (COARSE) (FOR AU-62/AU-65 PAL)

(W3: MOD & DEMOD)

TEST POINT	MODE	TAPE USED	M.EQ.	INPUT SIGNAL	ADJUSTMENT
TP309 F29·AB EDGE CONNECTOR (Trigger)	PLAY	ALIGNMENT TAPE SWEEP	OSCILLOSCOPE	-------	VR315 R/P 1 (CH1) VR316 R/P 2 (CH2)

1. SCOPE CH1 : TP309
   SCOPE CH2 : F29·AB EDGE CONNECTOR (Trigger)
2. SCOPE SETTING : Trigger Slope (+)
3. Adjust VR315 so that the Y R/P CH1 frequency response is 95% ± 10% at 5.0MHz portion.
4. SCOPE SETTING : Trigger Slope (-)
5. Adjust VR316 so that the Y R/P CH2 frequency response is 95% ± 10% at 5.0MHz portion.

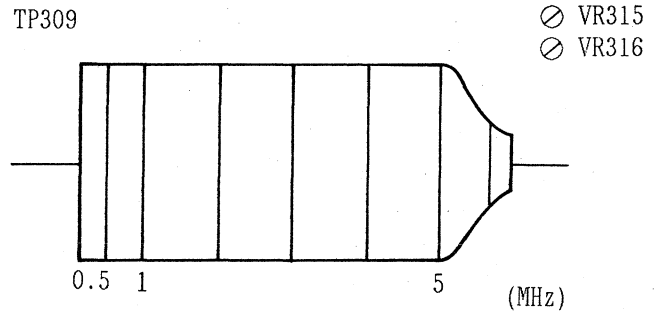

REF : 0.5MHz = 100%
SPEC : 5MHz = 95% ± 10%

7-40-N. Y PLAYBACK FREQUENCY RESPONSE ADJUSTMENT (COARSE) (FOR AU-63 NTSC)

(W3: MOD & DEMOD)

TEST POINT	MODE	TAPE USED	M.EQ.	INPUT SIGNAL	ADJUSTMENT
TP309 F28·AB EDGE CONNECTOR (Trigger)	PLAY	ALIGNMENT TAPE SWEEP	OSCILLOSCOPE	-------	VR313 AT 1 (CH1) VR314 AT 2 (CH2)

1. SCOPE CH1 : TP309
   SCOPE CH2 : F28·AB EDGE CONNECTOR (Trigger)
2. SCOPE SETTING : Trigger Slope (+)
3. Adjust VR313 so that the Y AT CH1 frequency response is 95% ± 10% at 4.0MHz portion.
4. SCOPE SETTING : Trigger Slope (-)
5. Adjust VR314 so that the Y AT CH2 frequency response is 95% ± 10% at 4.0MHz portion.

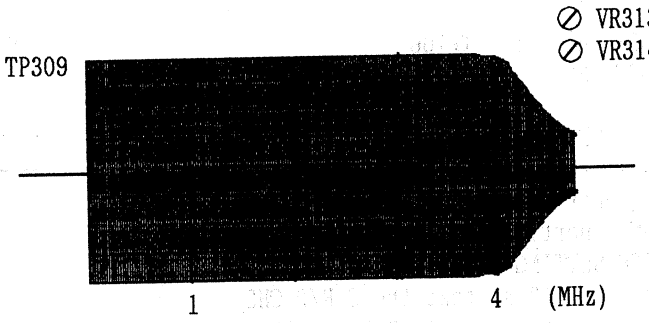

REF : 0.5MHz = 100%
SPEC : 4MHz = 95% ± 10%

7-40-P. Y PLAYBACK FREQUENCY RESPONSE ADJUSTMENT (COARSE) (FOR AU-63 PAL)

(W3: MOD & DEMOD)

TEST POINT	MODE	TAPE USED	M.EQ.	INPUT SIGNAL	ADJUSTMENT
TP309 F28·AB EDGE CONNECTOR (Trigger)	PLAY	ALIGNMENT TAPE SWEEP	OSCILLOSCOPE	-------	VR313 AT 1 (CH1) VR314 AT 2 (CH2)

1. SCOPE CH1 : TP309
   SCOPE CH2 : F28·AB EDGE CONNECTOR (Trigger)
2. SCOPE SETTING : Trigger Slope (+)
3. Adjust VR313 so that the Y AT CH1 frequency response is 95% ± 10% at 5.0MHz portion.
4. SCOPE SETTING : Trigger Slope (-)
5. Adjust VR314 so that the Y AT CH2 frequency response is 95% ± 10% at 5.0MHz portion.

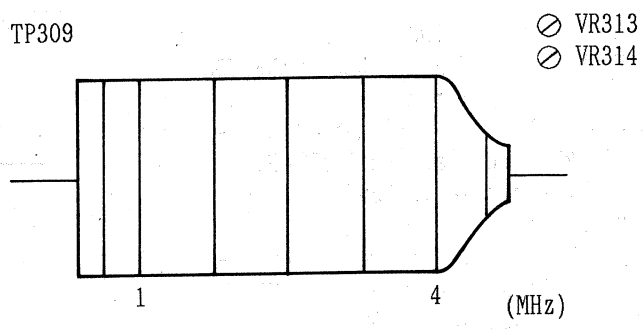

REF : 0.5MHz = 100%
SPEC : 5MHz = 95% ± 10%

7-41. C PLAYBACK FREQUENCY RESPONSE ADJUSTMENT (COARSE) (FOR AU-62/AU-65 NTSC & PAL)

TEST POINT	MODE	TAPE USED	M.EQ.	INPUT SIGNAL	ADJUSTMENT
TP706 F33·AB EDGE CONNECTOR (Trigger)	PLAY	ALIGNMENT TAPE SWEEP	OSCILLOSCOPE	-------	VR712 R/P 1 (CH1) VR713 R/P 2 (CH2)

1. SCOPE CH1 : TP706
   SCOPE CH2 : F33·AB EDGE CONNECTOR (Trigger)
2. SCOPE SETTING : Trigger Slope (+)
3. Adjust VR712 so that the C R/P CH1 frequency response is 95% ± 10% at 1.5MHz portion.
4. SCOPE SETTING : Trigger Slope (-)
5. Adjust VR713 so that the C R/P CH2 frequency response is 95% ± 10% at 1.5MHz portion.

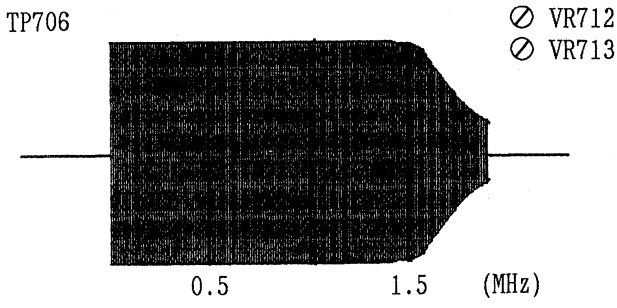

REF : 0.25MHz = 100%
SPEC : 1.5MHz = 95% ± 10%

7-42. C PLAYBACK FREQUENCY RESPONSE ADJUSTMENT (COARSE) (FOR AU-63 NTSC & PAL)

(W3: MOD & DEMOD)

TEST POINT	MODE	TAPE USED	M.EQ.	INPUT SIGNAL	ADJUSTMENT
TP706 F32·AB EDGE CONNECTOR (Trigger)	PLAY	ALIGNMENT TAPE SWEEP	OSCILLOSCOPE	-------	VR710 AT 1 (CH1) VR711 AT 2 (CH2)

1. SCOPE CH1 : TP706
   SCOPE CH2 : F32·AB EDGE CONNECTOR (Trigger)
2. SCOPE SETTING : Trigger Slope (+)
3. Adjust VR710 so that the C AT CH1 frequency response is 95% ± 10% at 1.5MHz portion.
4. SCOPE SETTING : Trigger Slope (-)
5. Adjust VR711 so that the C AT CH2 frequency response is 95% ± 10% at 1.5MHz portion.

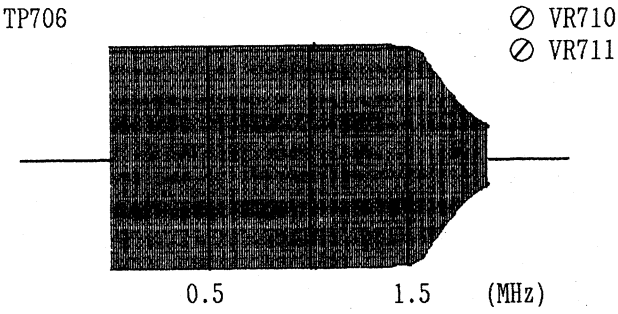

REF : 0.25MHz = 100%
SPEC : 1.5MHz = 95% ± 10%

7-43. Y DEMOD OUTPUT DC LEVEL ADJUSTMENT (FOR AU-65/63/62 PAL)

(W3: MOD & DEMOD)

TEST POINT	MODE	TAPE USED	M.EQ.	INPUT SIGNAL	ADJUSTMENT
TP311	PLAY	ALIGNMENT COLOUR BAR	OSCILLOSCOPE	-------	VR325 (OUT DC)

Note: This adjustment is PAL model only.

1. Adjust VR325 so that the pedestal level is DC 0 ± 0.1V.

7-44. C DEMOD OUTPUT DC LEVEL ADJUSTMENT (FOR AU-65/63/62 PAL)

(W3: MOD & DEMOD)

TEST POINT	MODE	TAPE USED	M.EQ.	INPUT SIGNAL	ADJUSTMENT
TP708	PLAY	ALIGNMENT COLOUR BAR	OSCILLOSCOPE	-------	VR722 (OUT DC)

Note:
This adjustment is PAL model only.

1. Adjust VR722 so that blanking DC level is DC 0 ± 0.1V.

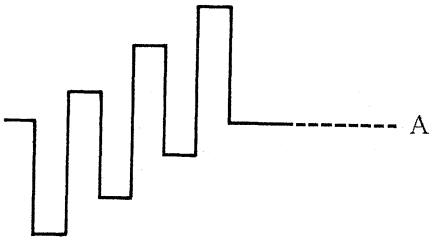

A = 0 ± 0.1V (DC)

8. TBC & SYNC GEN. (W1) BOARD (1/2)

TBC & SYNC GEN. SECTION (1/2) (W1) FLOWCHART FOR AU-65, AU-63 AND AU-62

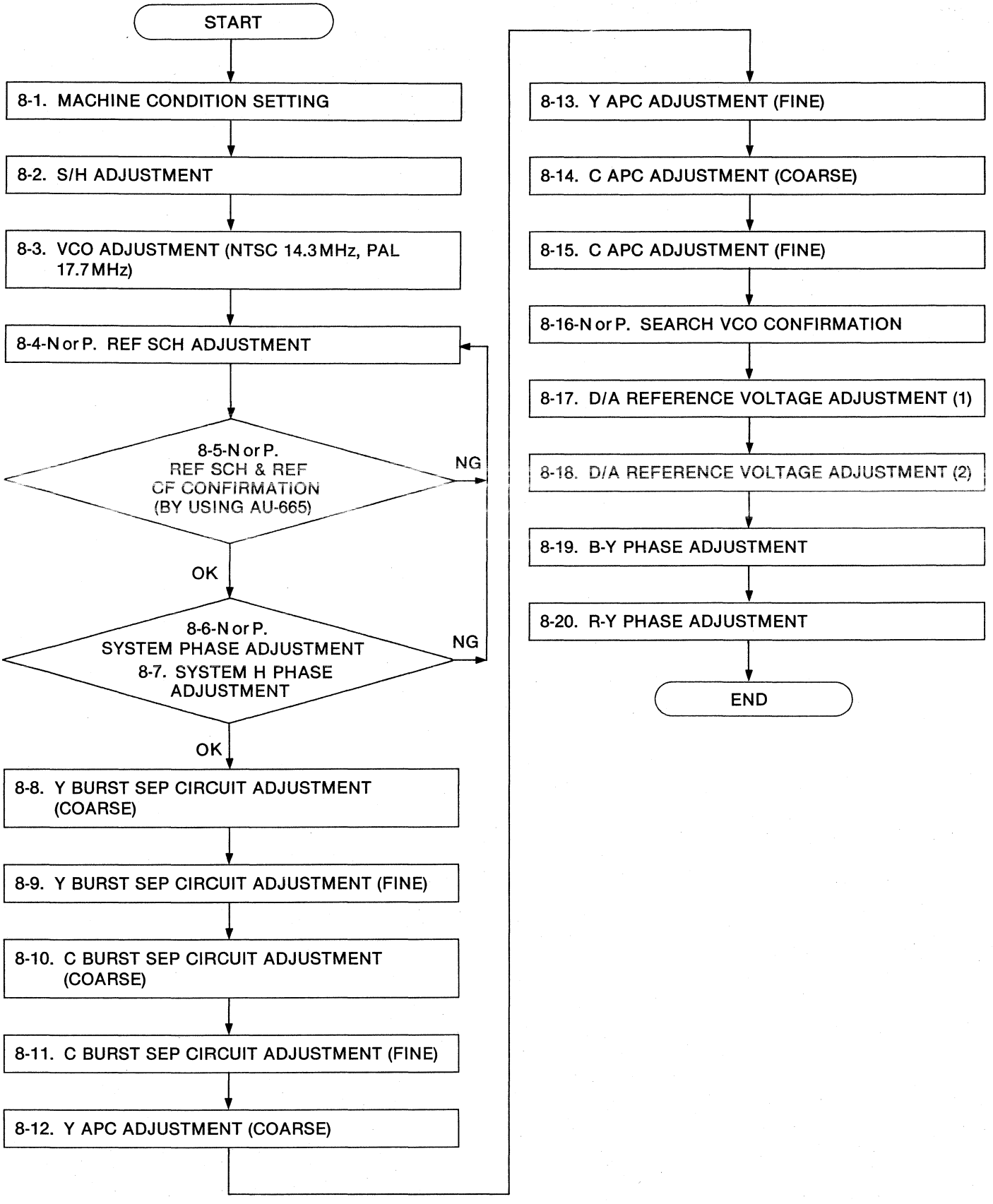

8. TBC & SYNC GEN. (W1) BOARD (1/2)

8-1. MACHINE CONDITION SETTING (FOR AU-65/63/62 NTSC & PAL)

To change the Input SCH Phase, another MII VTR is required Use the SCH Phase Adjustment Fixture as following adjustment section.

*NOTE:
1. When AU-665 is used for SCH Adjustment, use SYSTEM SC PHASE (COARSE & FINE) VR on the Front Sub Panel (Behind the Front Panel).

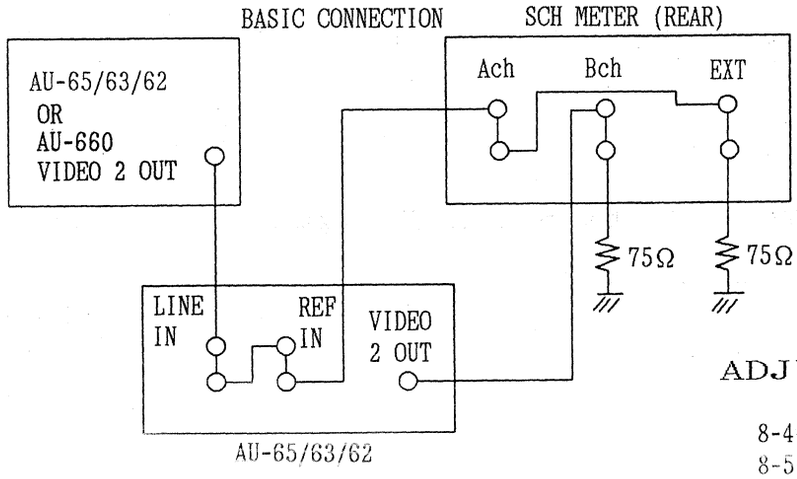

ADJUSTMENT SECTION

8-4-N or 8-4-P. REFERENCE SCH ADJUSTMENT
8-5-N or 8-5-P. REFERENCE SCH & REFERENCE CF CONFIRMATION
8-6-N or 8-6-P. SYSTEM PHASE ADJUSTMENT
8-7. SYSTEM H PHASE ADJUSTMENT

8-2. S/H ADJUSTMENT (FOR AU-65/63/62 NTSC & PAL)

(W1 TBC & SYNC GEN)

TEST POINT	MODE	TAPE USED	M.EQ.	INPUT SIGNAL	ADJUSTMENT
TP203 TP204	E-E (EJECT)	-----	OSCILLOSCOPE	COMPOSITE REF. VIDEO SIGNAL TO REF. VIDEO IN	VR201 (S/H PHASE)

Step 1. MACHINE CONDITION	Refer to SET UP Conditions at the beginning of this SECTION (TBC & SYNC GEN W1).
Step 2. 1. SCOPE CH1 : TP203 SCOPE CH2 : TP204 (Trigger) 2. Adjust VR201 so that the center point of S/H pulse at TP204 is in the center point of the burst signal at TP203.	⊘ VR201 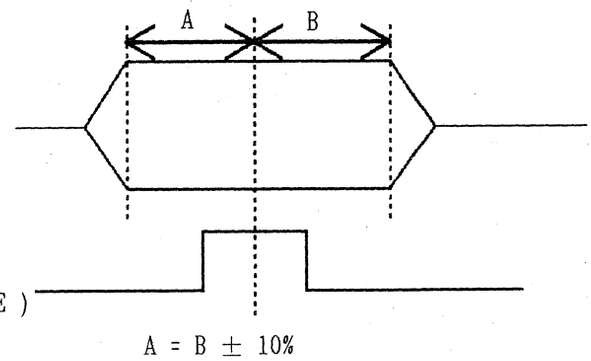 A = B ± 10%

8-3. VCO ADJUSTMENT (NTSC 14.3MHz, PAL 17.7MHz)
(FOR AU-65/63/62 NTSC & PAL)

(W1 TBC & SYNC GEN)

TEST POINT	MODE	TAPE USED	M.EQ.	INPUT SIGNAL	ADJUSTMENT
TP206	E-E (EJECT)	-------	OSCILLOSCOPE	COMPOSITE REF. VIDEO SIGNAL TO REF. VIDEO IN	C234

1. Connect the SCOPE to TP206.
2. Adjust C234 so that D.C. voltage at TP206 is 0V.
3. Confirm C234 so that D.C. voltage at TP206 is 0V with no reference VIDEO signal.

8-4-N. REF SCH DET ADJUSTMENT (FOR AU-65/63/62 NTSC)

(W1 TBC & SYNC GEN)

TEST POINT	MODE	TAPE USED	M.EQ.	INPUT SIGNAL	ADJUSTMENT
TP207 TP208 VIDEO 2 OUT	EJECT	-------	OSCILLOSCOPE SCH METER	REF VIDEO	VR202 (SCH DET)

Step 1.

1. Input reference signal to REF VIDEO input with SCH 0°.

Step 2.

1. Connect the scope to TP207 and TP208 with H rate.
2. Adjust VR202 so that rising dege at TP208 pulse is center of the pulse at TP208 as shown in figure.

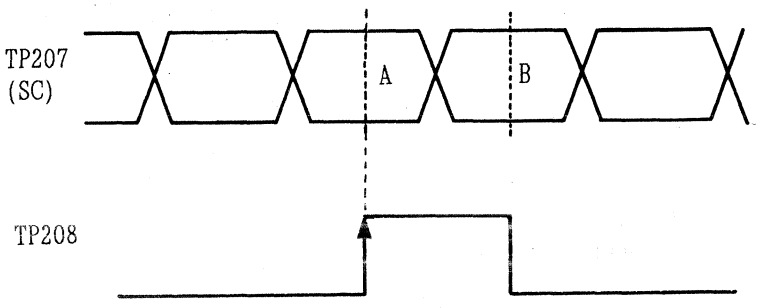

Step 3.

1. Connectthe SCH meter to VIDEO 2 OUT.
2. Confirm that SCH phase of VIDEO 2 OUT is near 0° with EXT REF mode.
3. If the SCH phase of VIDEO 2 OUT is near 180°, readjust Step 2. (When adjustment point of TP207 is "A", readjustment point is "B" as shown in figure.)

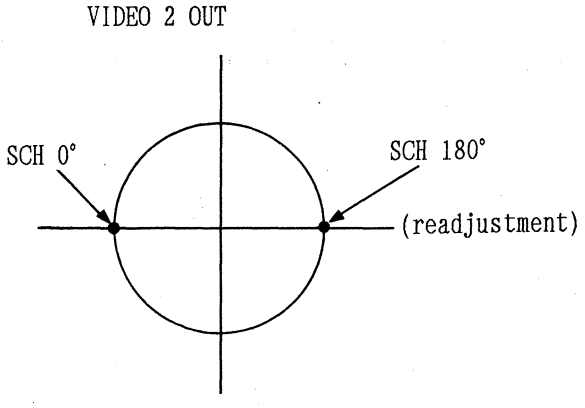

8-4-P. REF SCH DET ADJUSTMENT (FOR AU-65/63/62 PAL)

(W1 TBC & SYNC GEN)

TEST POINT	MODE	TAPE USED	M.EQ.	INPUT SIGNAL	ADJUSTMENT
FIELD REF AT SIGNAL GEN TP207 TP208 TP214	E-E (EJECT)	-------	OSCILLOSCOPE	REF VIDEO	VR202 (SCH DET)

Step 1. (CORASE)

1. Preset VR202 (SCH DET) to the 10 o'clock position.

⊘ VR202

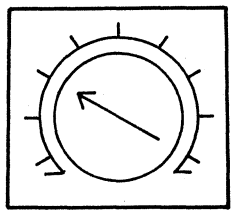

Step 2.

1. Confirm input reference signal to REF VIDEO input with SCH 0°.
2. Connect the scope to TP207 and TP208 with V rate.
3. Adjust VR202 so that the pulse at TP208 is center of the pulse at TP207 as shwon in figure.

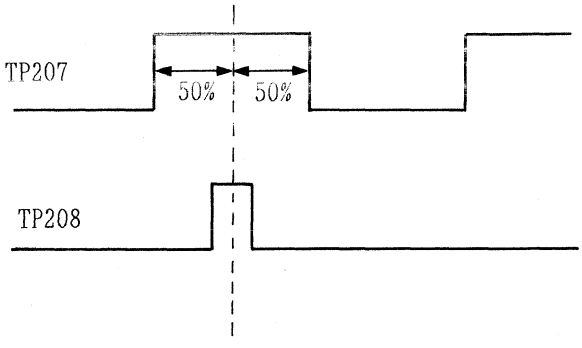

8-5-N. REF SCH & REF CF CONFIRMATION (BY USING AU-665)
(FOR AU-65/63/62 NTSC)

(W1 TBC & SYNC GEN)

TEST POINT	MODE	TAPE USED	M.EQ.	INPUT SIGNAL	ADJUSTMENT
REF SCH LAMP (on Front Panel) TP214	EJECT (E-E)	------	OSCILLOSCOPE	REF. INPUT	----------

Note:
This confirmation in case of having AU-665 only, for fine tune-up.

Step 1.
MACHINE CONDITION

Refer to Set Up Conditions at the beginning of this SECTION (TBC & SYNC GEN W1).

Step 2.

1. Set the REF. SCH Phase to +50° and -50°.
2. Confirm that the REF. SCH LAMP on the Front Panel turns "ON".

SCH PHASE = ±50°

REF. SCH ON

Step 3.

1. CONNECTION
2. CONFIRMATION
 1) Confirm that the CF Pulse of the Composite Signal Generator and TP214 (on W1) are the same phase.

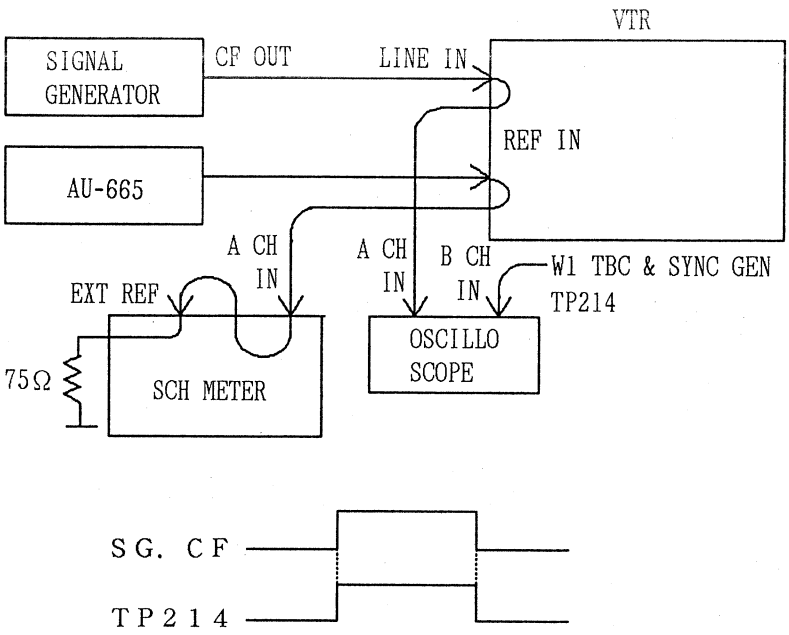

Step 4.

1. Set the REF. SCH Phase to +75° and -75°.
2. Confirm that the REF. SCH LAMP on the Front Panel turns "OFF".

SCH PHASE = ±75°

REF. SCH OFF

8-5-P. REF SCH CONFIRMATION (BY USING AU-665) (FOR AU-65/63/62 PAL)

(W1 TBC & SYNC GEN)

TEST POINT	MODE	TAPE USED	M.EQ.	INPUT SIGNAL	ADJUSTMENT
REF SCH LAMP (on Front Panel)	EJECT (E-E)	-------	OSCILLOSCOPE	REF VIDEO	----------

Note: This confirmation in case of having AU-665 only. Step 1. MACHINE CONDITION	Refer to Set Up Conditions at the beginning of this SECTION (TBC & SYNC GEN W1).
Step 2. 1. Change the REF SCH phase from -45° TO +45° by signal generator (TEK1411). 2. Confirm that the REF SCH LAMP on the Front Panel turns "ON".	REF. SCH ON SCH PHASE = ±45°
Step 3. 1. Change the REF SCH phase less than -65° and more than +65° by signal generator (TEK1411). 2. Confirm that the REF SCH LAMP on the Front Panel turns "OFF".	REF. SCH OFF SCH PHASE = Less than -65° = more than +65°
Step 4. 1. If it is not satisfied above condition, readjust, the REF. SCH adjustment 8-4-P and 8-5-P. (This adjustment.)	

8-6-N. SYSTEM PHASE ADJUSTMENT (FOR AU-65/63/62 NTSC)

(W1 TBC & SYNC GEN)

TEST POINT	MODE	TAPE USED	M.EQ.	INPUT SIGNAL	ADJUSTMENT
REF VIDEO VIDEO 2	E-E (EJECT) FOR AU-65 PLAY (FOR AU-63/62)	ALIGNMENT TAPE 75% COLOR BAR (FOR AU-63/62)	SCH METER	REF. VIDEO (SCH 0°)	VR203 (SYS SC PHASE) VR204 (SCH PHASE)

Step 1.
MACHINE CONDITION

Refer to the Set Up Conditions at the beginning of this SECTION (TBC & SYNC GEN W1).

Step 2.

1. Set the REF. SCH Phase to 0° with the another MII VTR.
2. SYS SC FINE (Pull Out Drawer) : DETENT POSITION
3. SCH METER'S trigger is EXT.
4. Change the SCH INPUT SELECT (A and B) alternatly.
5. Adjust VR203 so that the A channel REF VIDEO H phase and the B channel VIDEO 2 OUT H phase are the same phase on the SCH METER (0° ± 2°)
6. Adjust VR204 so that the burst phase becomes 0° ± 2° (Trigger : INT).

Note:
SCH ADJ. VR on the front pull out drawer is in detend position.

CONNECTION

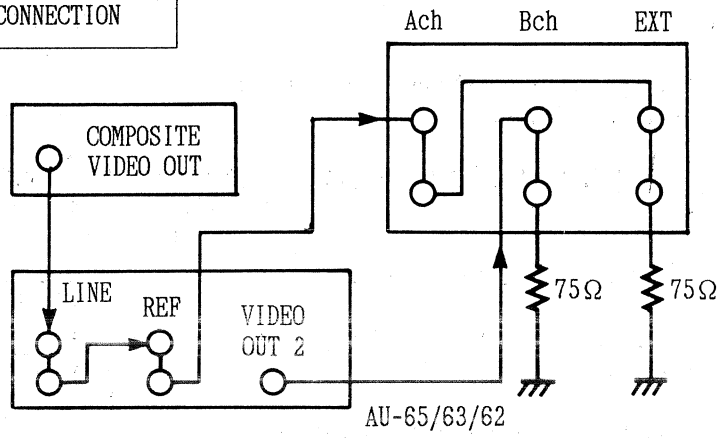

SPEC

SCH METER
(Trigger : EXT)

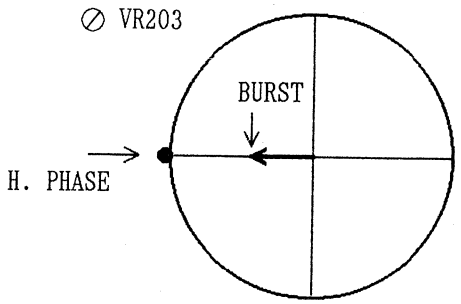

SPECIFICATION = 0° ± 2°

8-6-P. SYSTEM PHASE ADJUSTMENT (FOR AU-65/63/62 PAL)

(W1 TBC & SYNC GEN)

TEST POINT	MODE	TAPE USED	M.EQ.	INPUT SIGNAL	ADJUSTMENT
REF VIDEO VIDEO 2	E-E (EJECT) FOR AU-65 PLAY (FOR AU-63/62)	ALIGNMENT TAPE COLOR BAR (FOR AU-63/62)	SCH METER	REF. VIDEO (SCH 0°)	VR206 (CK1 PHASE) VR204 (SCH PHASE)

Step 1. MACHINE CONDITION

Refer to the Set Up Conditions at the beginning of this SECTION (TBC & SYNC GEN W1).

Step 2.

1. Set the REF. SCH Phase to 0° with the another MII VTR.
2. SYS SC FINE (Pull Out Drawer) : DETENT POSITION
3. SCH METER'S trigger is EXT.
4. Change the SCH INPUT SELECT (A and B) alternatly.
5. Adjust VR204 and VR206 so that the A channel REF VIDEO H phase and the B channel VIDEO 2 OUT H phase are the same (0° ± 2°).

CONNECTION

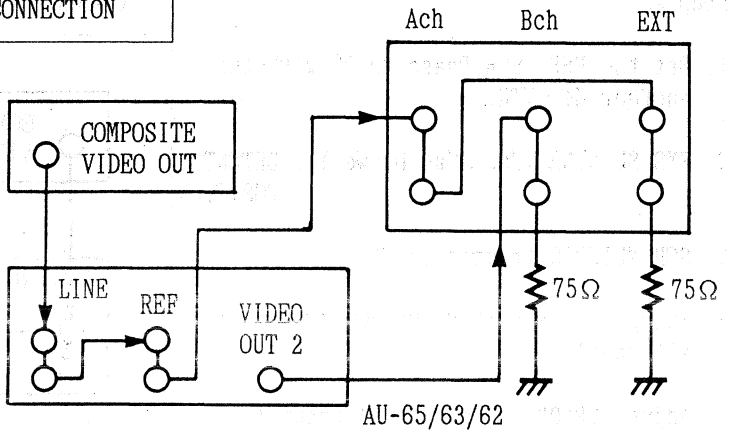

SPEC

SCH METER
(Trigger : EXT)

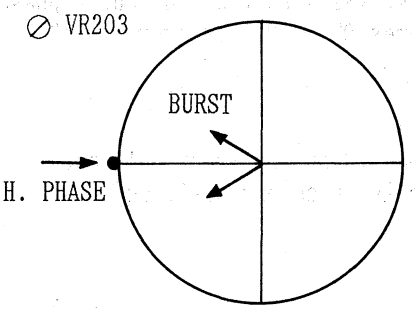

SPECIFICATION = 0° ± 2°

8-7. SYSTEM H PHASE ADJUSTMENT (FOR AU-65/63/62 NTSC & PAL)

(W1 TBC & SYNC GEN)

TEST POINT	MODE	TAPE USED	M.EQ.	INPUT SIGNAL	ADJUSTMENT
VIDEO 2 REF VIDEO	E-E (EJECT) FOR AU-65 PLAY (FOR AU-63/62)	ALIGNMENT TAPE COLOR BAR (FOR AU-63/62)	SCH METER (WFM Mode)	REF. VIDEO (SCH 0°)	VR205 (H PHASE)

1. CONNECTION

2. MACHINE CONDITION
   Refer to the Machine Set Up Condition for TBC & SYNC GEN (W1).

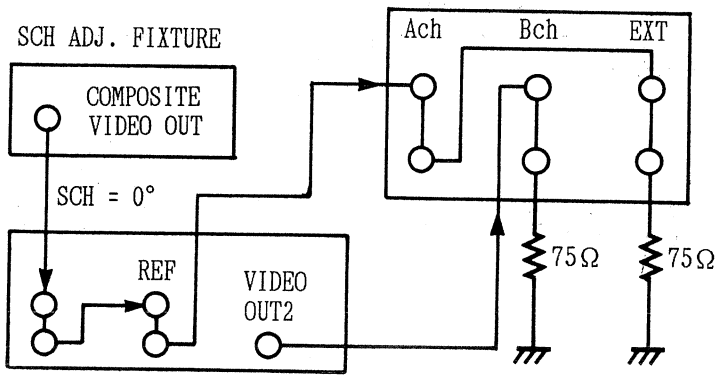

AU-62/AU-63/AU-65

3. SCH METER : WFM Mode
4. Change the channel A and B alternately.
5. Adjust VR205 so that the B channel's falling edge of Sync becomes the same as the A channel falling edge of Sync as shown.

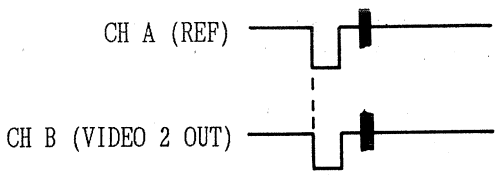

6. CONFIRMATION

   (1) REF VIDEO and VIDEO 2, H phase converge on same point when the power is turned ON and OFF.

   (2) When the SYSTEM SC COARSE (on Front Pull Out Drawer) is changed to ±90°, SYSTEM SC phase moves
   NTSC ± 70 n sec.
   PAL ± 57 n sec.

7. If it is not within specification, readjust VR205.

8-8. Y BURST SEP CIRCUIT ADJUSTMENT (COARSE) (FOR AU-65/63/62 NTSC & PAL)

(W1 TBC & SYNC GEN)

TEST POINT	MODE	TAPE USED	M.EQ.	INPUT SIGNAL	ADJUSTMENT
F15B (CONNECTOR) TP412	PLAY	ALIGNMENT TAPE COLOR BAR	OSCILLOSCOPE	-------	VR401 (Y SYNC PHASE)

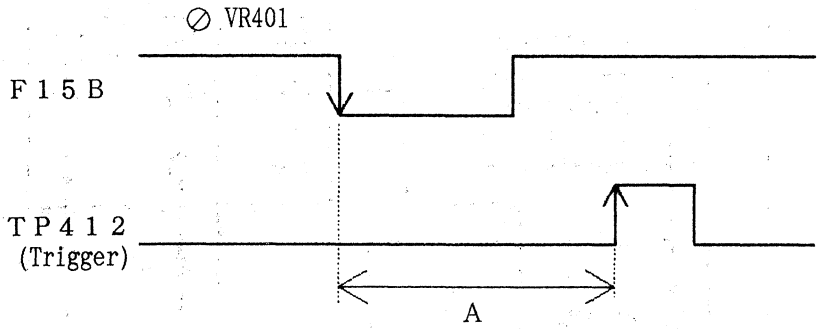

NTSC A = 7.2 μsec.
PAL A = 7.0 μsec.
(Trigger : TP412)

8-9. Y BURST SEP CIRCUIT ADJUSTMENT (FINE) (FOR AU-65/63/62 NTSC & PAL)

(W1 TBC & SYNC GEN)

TEST POINT	MODE	TAPE USED	M.EQ.	INPUT SIGNAL	ADJUSTMENT
TP412 TP413	PLAY	ALIGNMENT TAPE COLOR BAR	OSCILLOSCOPE	----------	VR401 (Y SYNC PHASE)

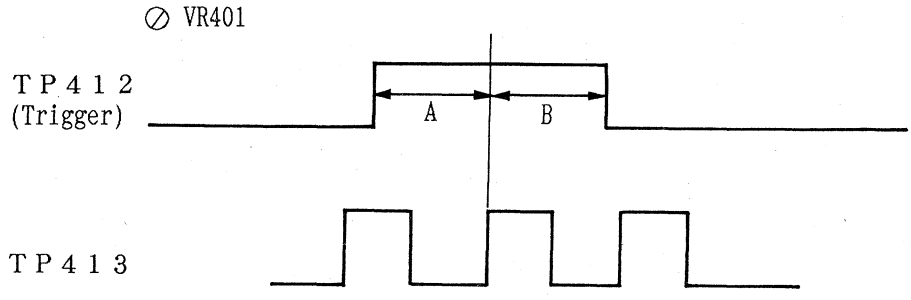

A = B ± 10%

(Trigger : TP412)

8-10. C BURST SEP CIRCUIT ADJUSTMENT (COARSE)
(FOR AU-65/63/62 NTSC & PAL)

(W1 TBC & SYNC GEN)

TEST POINT	MODE	TAPE USED	M.EQ.	INPUT SIGNAL	ADJUSTMENT
F16B (CONNECTOR) TP416	PLAY	ALIGNMENT TAPE COLOR BAR	OSCILLOSCOPE	----------	VR409 (C SYNC PHASE)

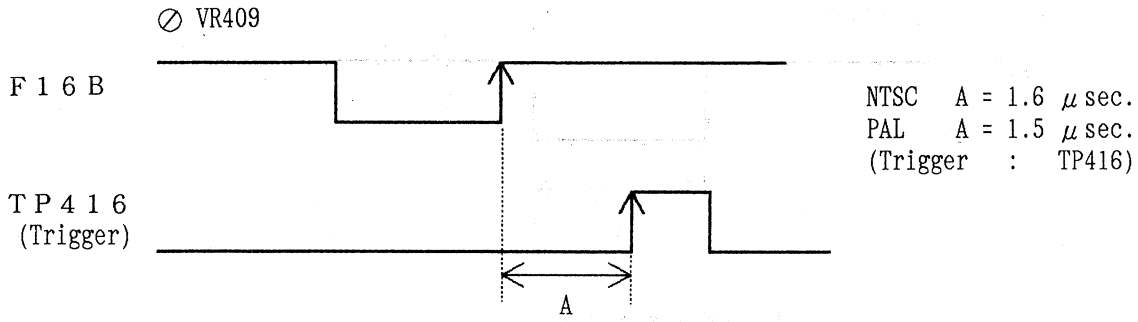

8-11. C BURST SEP CIRCUIT ADJUSTMENT (FINE)
(FOR AU-65/63/62 NTSC & PAL)

(W1 TBC & SYNC GEN)

TEST POINT	MODE	TAPE USED	M.EQ.	INPUT SIGNAL	ADJUSTMENT
TP416 TP417	PLAY	ALIGNMENT TAPE COLOR BAR	OSCILLOSCOPE	----------	VR409 (C SYNC PHASE)

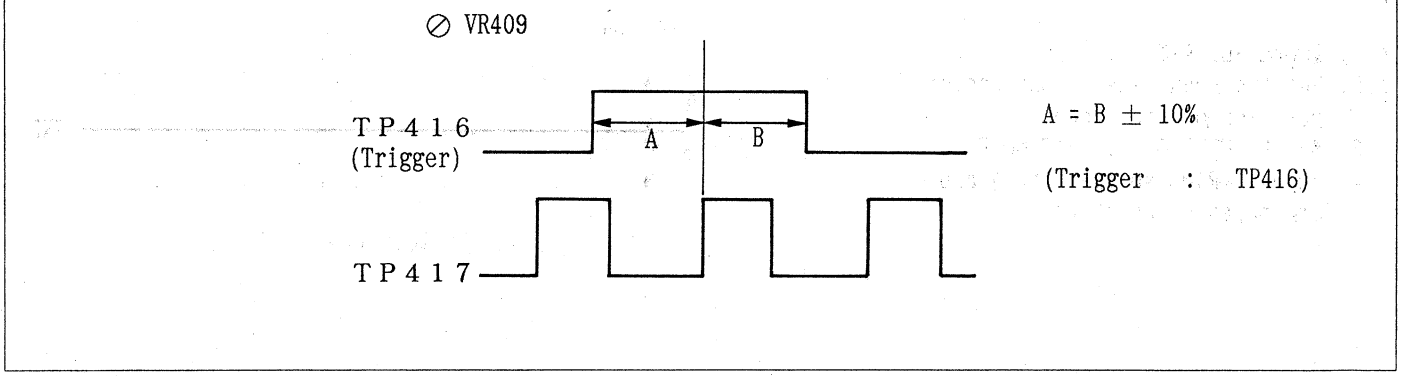

8-12. Y APC ADJUSTMENT (COARSE) (FOR AU-65/63/62 NTSC & PAL)

(W1 TBC & SYNC GEN)

TEST POINT	MODE	TAPE USED	M.EQ.	INPUT SIGNAL	ADJUSTMENT
TP427	PLAY	ALIGNMENT TAPE COLOR BAR	OSCILLOSCOPE	----------	VR403 (Y APC)

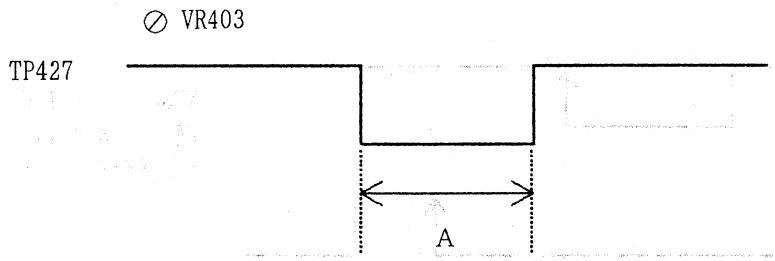

A = 150 n s ± 5 n s

8-13. Y APC ADJUSTMENT (FINE) (FOR AU-65/63/62 NTSC & PAL)

(W1 TBC & SYNC GEN)

TEST POINT	MODE	TAPE USED	M.EQ.	INPUT SIGNAL	ADJUSTMENT
TP425	PLAY	ALIGNMENT TAPE COLOR BAR	OSCILLOSCOPE	----------	VR403 (Y APC)

1. SCOPE SETTING : GND
2. Set the scan line to the center position on the scope.
3. SCOPE SETTING : AC MODE
4. Adjust VR403 so that the A and B are balanced as shown.

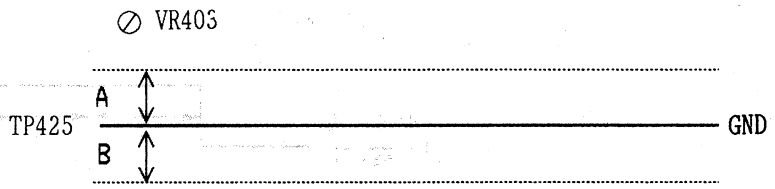

A = B ± 10% (V RATE)

8-14. C APC ADJUSTMENT (COARSE) (FOR AU-65/63/62 NTSC & PAL)

(W1 TBC & SYNC GEN)

TEST POINT	MODE	TAPE USED	M.EQ.	INPUT SIGNAL	ADJUSTMENT
TP426	PLAY	ALIGNMENT TAPE COLOR BAR	OSCILLOSCOPE	----------	VR408 (C APC)

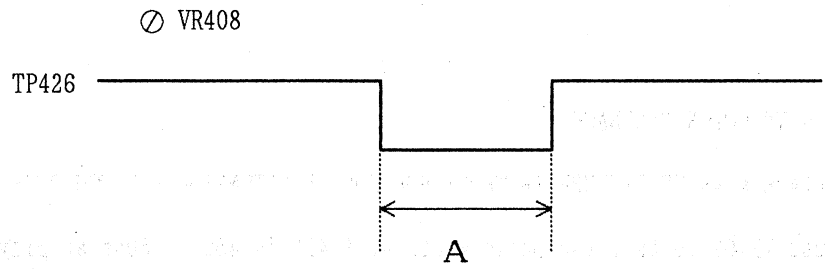

A = 150 n s ± 5 n s

8-15. C APC ADJUSTMENT (FINE) (FOR AU-65/63/62 NTSC & PAL)

(W1 TBC & SYNC GEN)

TEST POINT	MODE	TAPE USED	M.EQ.	INPUT SIGNAL	ADJUSTMENT
TP424	PLAY	ALIGNMENT TAPE COLOR BAR	OSCILLOSCOPE	----------	VR408 (C APC)

1. SCOPE SETTING : GND
2. Set the scan line to the center position on the scope.
3. SCOPE SETTING : AC MODE
4. Adjust VR408 so that the A and B are balanced as shown in figure.

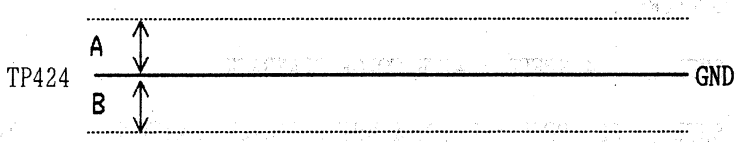

A = B ± 10% (V LATE)

8-16-N. SEARCH VCO CONFIRMATION (FOR AU-65/63/62 NTSC)

(W1: TBC & SYNC GEN)

TEST POINT	MODE	TAPE USED	M.EQ.	INPUT SIGNAL	ADJUSTMENT
TP422	SHTL & PLAY	ALIGNMENT TAPE COLOR BAR	OSCILLOSCOPE	----------	VR402 (SEARCH VCO)

CONFIRMATION

1. SHTL ± ×4 SPEED = WITH COLOR PLAYBACK.
2. SHTL ± 32 SPEED = BLACK & WHITE PICTURE (WITHOUT HORIZONTAL EXTENSION AND COMPRESSION)

   If it is not, readjust VR402 so that the pulse width at TP422 is 450 ± 50ns at playback.

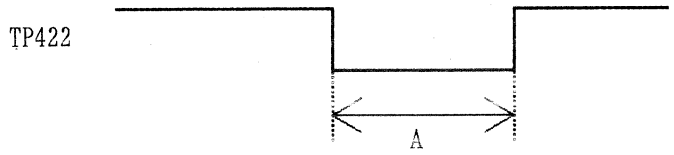

8-16-P. SEARCH VCO CONFIRMATION (FOR AU-65/63/62 PAL)

(W1: TBC & SYNC GEN)

TEST POINT	MODE	TAPE USED	M.EQ.	INPUT SIGNAL	ADJUSTMENT
TP422 F15B (W1 connector)	SHTL & PLAY	ALIGNMENT TAPE COLOR BAR	OSCILLOSCOPE	----------	VR402 (SEARCH VCO)

CONFIRMATION

1. SHTL ± ×4 SPEED = WITH COLOR PLAYBACK.
2. SHTL ± 32 SPEED = BLACK & WHITE PICTURE (WITHOUT HORIZONTAL EXTENSION AND COMPRESSION)

   If it is not, readjust VR402 so that the pulse width at TP422 is as shown in Figure at playback.

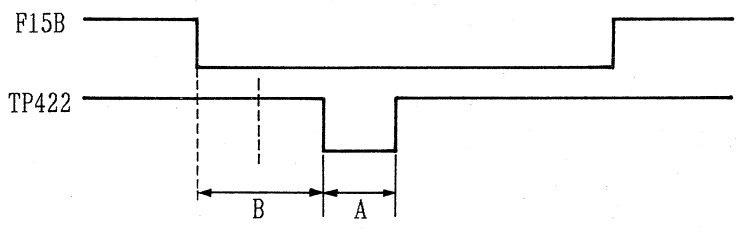

A × 2 = B ± 10%

8-17. D/A REFERENCE VOLTAGE ADJUSTMENT (1) (FOR AU-65/63/62 NTSC & PAL)

(W1 TBC & SYNC GEN)

TEST POINT	MODE	TAPE USED	M.EQ.	INPUT SIGNAL	ADJUSTMENT
TP1	PLAY	ALIGNMENT TAPE COLOR BAR	Digital Voltage Meter	-------	VR1 (AJ. REF. 1)
Step 1. MACHINE CONDITION			VIDEO LEVEL VR = CENTER (on Pull Out Drawer)		
Step 2. 1. Connect D.V.M. to TP1 and adjust VR1.			⊘ VR1 SPECIFICATION = 4.1 ± 0.01V (DC)		

8-18. D/A REFERENCE VOLTAGE ADJUSTMENT (2) (FOR AU-65/63/62 NTSC & PAL)

(W1 TBC & SYNC GEN)

TEST POINT	MODE	TAPE USED	M.EQ.	INPUT SIGNAL	ADJUSTMENT
TP2	PLAY	ALIGNMENT TAPE COLOR BAR	Digital Voltage Meter	-------	VR2 (AJ. REF. 2)
Step 1. MACHINE CONDITION			Set the switches on the Pull Out Drawer as follows. 1. VIDEO LEVEL VR : CENTER 2. CHROMA LEVEL : CENTER 3. PR LEVEL : CENTER 4. PB LEVEL : CENTER		
Step 2. 1. Connect D.V.M. to TP2 and adjust VR2.			⊘ VR2 SPECIFICATION = 4.1 ± 0.01V (DC)		

8-19. B-Y PHASE ADJUSTMENT (FOR AU-65/63/62 NTSC & PAL)

(W1 TBC & SYNC GEN)

Step 1. 1. Turn VR405 center position. Note: VR405 is for user, so confirm the user setting.	VR406 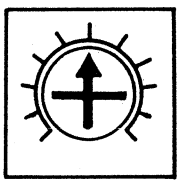

8-20. R-Y PHASE ADJUSTMENT (FOR AU-65/63/62 NTSC & PAL)

(W1 TBC & SYNC GEN)

Step 1. 1. Turn VR406 center position. Note: VR406 is for user, so confirm the user setting.	VR406 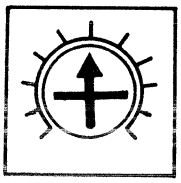

9. ENCODER (W2) BOARD (1/2)

ENCODER SECTION (1/2) (W2) FLOWCHART FOR AU-65, AU-63 AND AU-62

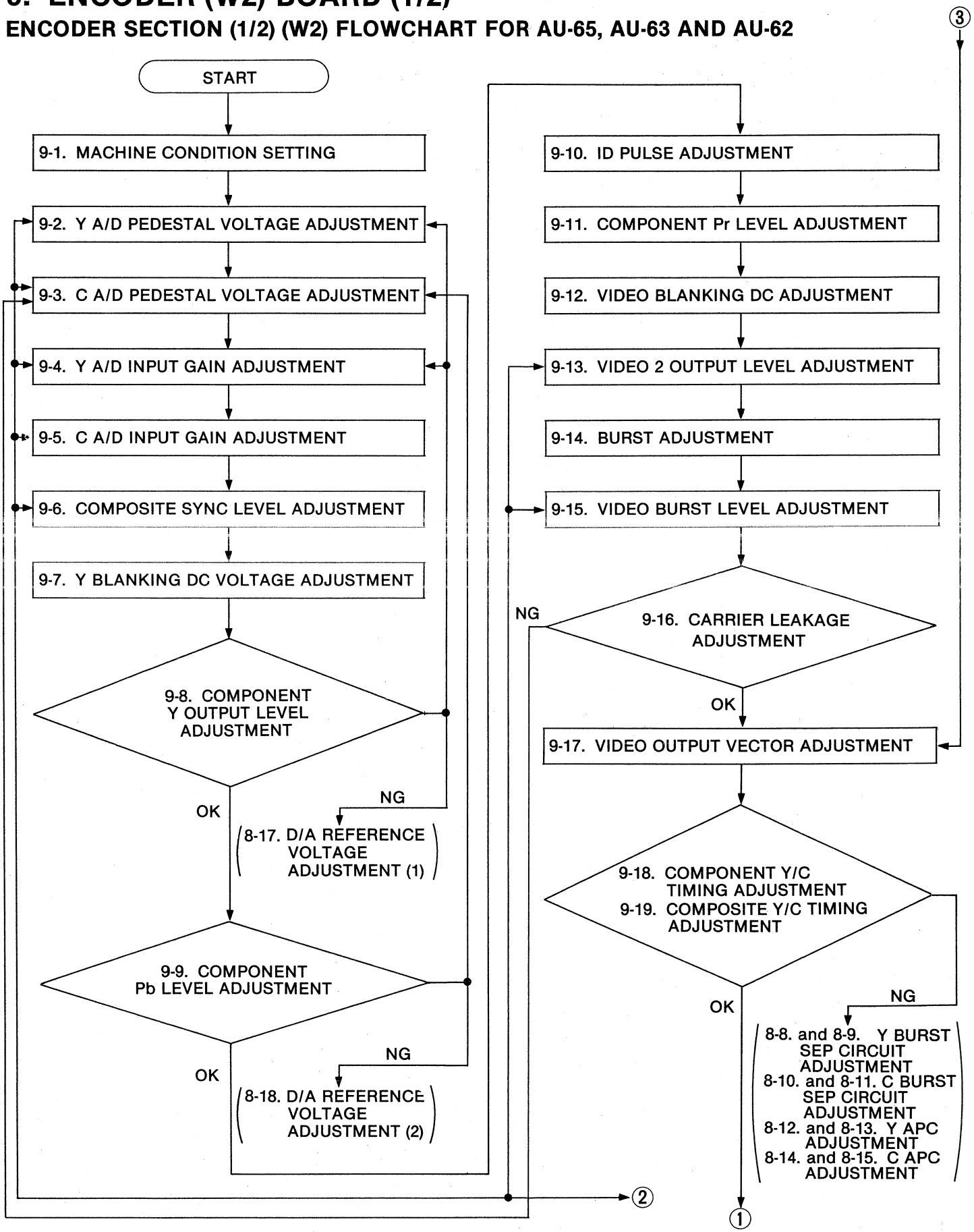

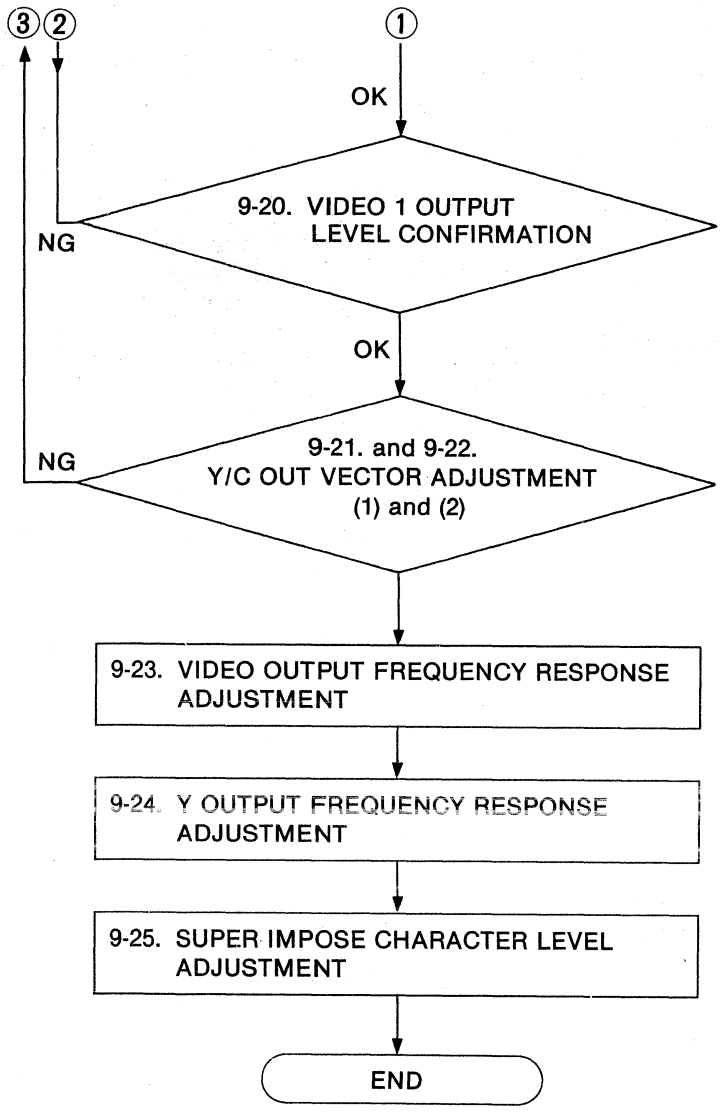
③ ②
①
OK
9-20. VIDEO 1 OUTPUT LEVEL CONFIRMATION
NG
OK
9-21. and 9-22. Y/C OUT VECTOR ADJUSTMENT (1) and (2)
NG
9-23. VIDEO OUTPUT FREQUENCY RESPONSE ADJUSTMENT
9-24. Y OUTPUT FREQUENCY RESPONSE ADJUSTMENT
9-25. SUPER IMPOSE CHARACTER LEVEL ADJUSTMENT
END

9. ENCODER (W2) BOARD (1/2)

9-1. MACHINE CONDITION SETTING (FOR AU-65/63/62 NTSC & PAL)

Use 75Ω terminator with Waveform Monitor or Oscilloscope for level adjustment.

1. CF SELECT SW (on Front Sub Panel) ---------- NTSC 4F, PAL 8F
2. SYNC SELECT SW (on Front Sub Panel) ---------- AUTO
3. COMPONENT Y/Pr/Pb LEVEL VR (on Pull Out Drawer) --- DETENT POSITION
4. VIDEO LEVEL VR ---------- DETENT POSITION
5. SET UP LEVEL VR ---------- DETENT POSITION
6. CHROMA LEVEL VR ---------- DETENT POSITION
7. HUE VR ---------- DETENT POSITION

9-2. Y A/D PEDESTAL VOLTAGE ADJUSTMENT (FOR AU-65/63/62 NTSC & PAL)

(W2 ENCODER)

TEST POINT	MODE	TAPE USED	M.EQ.	INPUT SIGNAL	ADJUSTMENT
TP201	PLAY	ALIGNMENT TAPE 100% COLOR BAR	OSCILLOSCOPE	----------	VR 2 (Y REF)

1. SCOPE : TP201
2. When VR2 is turned, a step will appear at pedestal.
3. Adjust VR2 so that "A" part is "FLAT".

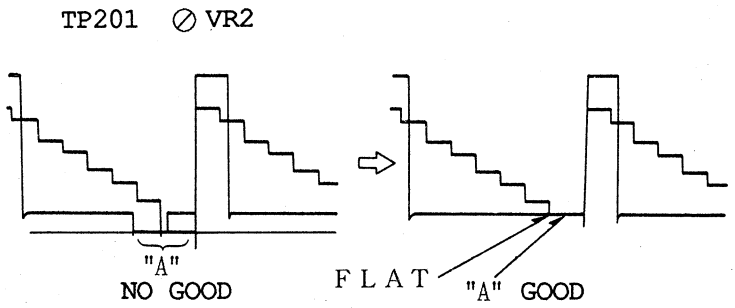

9-3. C A/D PEDESTAL VOLTAGE ADJUSTMENT (FOR AU-65/63/62 NTSC & PAL)

(W2 ENCODER)

TEST POINT	MODE	TAPE USED	M.EQ.	INPUT SIGNAL	ADJUSTMENT
COMPONENT Pb OUT	PLAY	ALIGNMENT TAPE 100% COLOR BAR	OSCILLOSCOPE	---------	VR 4 (C REF)

1. SCOPE : COMPONENT Pb OUT
2. When VR4 is turned, a step will appear appear at pedestal.
3. Adjust VR4 so that the step at pedestal is "FLAT".

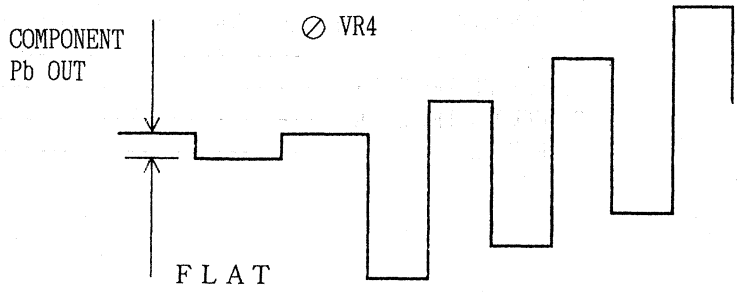

9-4. Y A/D INPUT GAIN ADJUSTMENT (FOR AU-65/63/62 NTSC & PAL)

(W2 ENCODER)

TEST POINT	MODE	TAPE USED	M.EQ.	INPUT SIGNAL	ADJUSTMENT
COMPONENT Y OUT	E-E (For AU-65) PLAY (For AU-63/62)	Pre-recorded Level Reference Color Bar (For AU-63/62)	WAVEFORM MONITOR OR OSCILLOSCOPE	COMPONENT COLOR BAR LEVEL REFERENCE SIGNAL	VR 1 (Y. G)

Step 1. (For AU-65)

1. SCOPE : COMPONENT Y OUT
2. Adjust VR1 so that the Top portion is clipped as shown in figure.

Step 2. (For AU-63/62)

1. SCOPE : COMPONENT Y OUT
2. Play back the Pre-recorded Color Bar Level Reference Signal.
3. Adjust VR1 so that the Top Portion of the Color Bar Level Reference Signal is clipped as shown in figure.

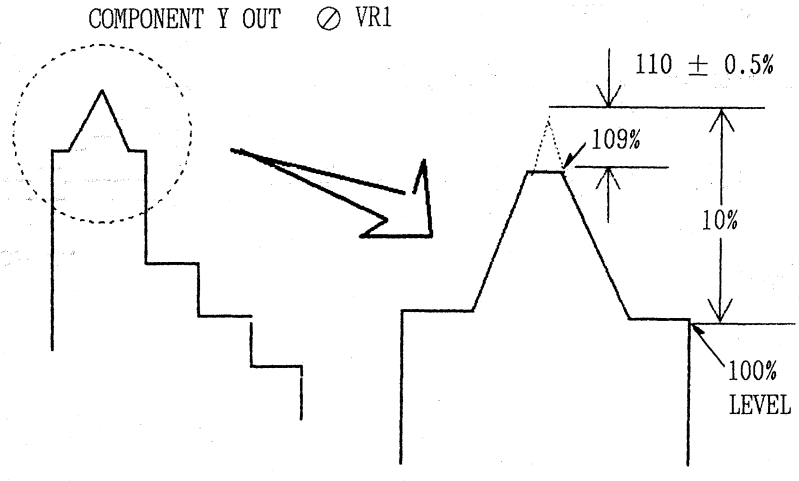

9-5. C A/D INPUT GAIN ADJUSTMENT (FOR AU-65/63/62 NTSC & PAL)

(W2 ENCODER)

TEST POINT	MODE	TAPE USED	M.EQ.	INPUT SIGNAL	ADJUSTMENT
TP 4	PLAY	ALIGNMENT COLOR BAR NTSC 75% PAL 100%	OSCILLOSCOPE	---------	VR 3 (C. G)

1. Adjust VR3 so that R-Y level is

   NTSC : 1.22 ± 0.02Vp-p
   PAL : 1.75 ± 0.02Vp-p

TP4 ⊘ VR3

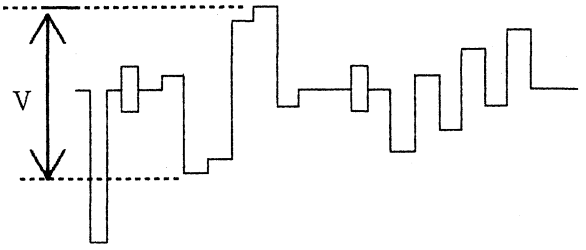

V = NTSC : 1.22 ± 0.02Vp-p
PAL : 1.75 ± 0.02Vp-p

9-6. COMPOSITE SYNC LEVEL ADJUSTMENT (FOR AU-65/63/62 NTSC & PAL)

(W2 ENCODER)

TEST POINT	MODE	TAPE USED	M.EQ.	INPUT SIGNAL	ADJUSTMENT
VIDEO 2 OUT	E-E (EJECT)	-------	OSCILLOSCOPE (with 75Ω terminator)	---------	VR210 (SYNC. G)

1. Adjust VR210 so that H-SYNC level is

   NTSC : 0.286 ± 0.004Vp-p
   PAL : 0.3 ± 0.006Vp-p

VIDEO 2 OUT

⊘ VR210

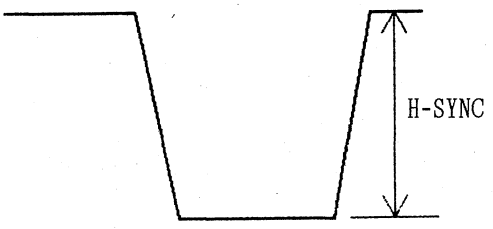

NTSC : H. SYNC LEVEL = 0.286 ± 0.004Vp-p
PAL : H. SYNC LEVEL = 0.3 ± 0.006Vp-p

9-7. Y BLANKING DC VOLTAGE ADJUSTMENT (FOR AU-65/63/62 NTSC & PAL)

(W2 ENCODER)

TEST POINT	MODE	TAPE USED	M.EQ.	INPUT SIGNAL	ADJUSTMENT
COMPONENT Y OUT	E-E (EJECT)	-----	OSCILLOSCOPE	---------	VR202 (Y. BLK DC)

1. Adjust VR202 so that H-BLANKING DC level is 0 ± 20mV at COMPONENT Y OUT.

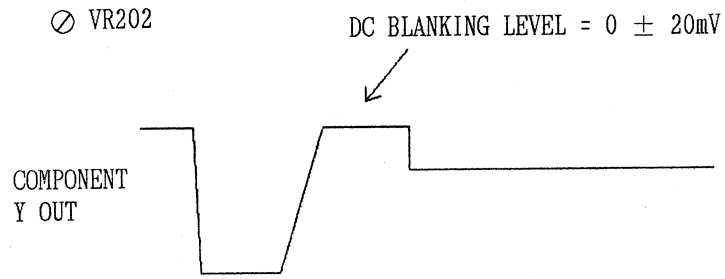

9-8. COMPONENT Y OUTPUT LEVEL ADJUSTMENT (FOR AU-65/63/62 NTSC & PAL)

(W2 ENCODER)

TEST POINT	MODE	TAPE USED	M.EQ.	INPUT SIGNAL	ADJUSTMENT
COMPONENT Y OUT	PLAY	ALIGNMENT TAPE COLOR BAR	OSCILLOSCOPE (with 75Ω terminator)	---------	VR200 (Y. G) VR201 (Y. DC)

1. Confirm that the sync level is 0.3 ± 0.005Vp-p.
2. If sync level is incorrect, readjust COMPOSITE SYNC LEVEL ADJ. (9-6)
3. Adjust VR200 so that the Y signal level is 0.7 ± 0.007Vp-p.
4. Adjust VR201 so that Y pedestal DC is 0 ± 5mV.

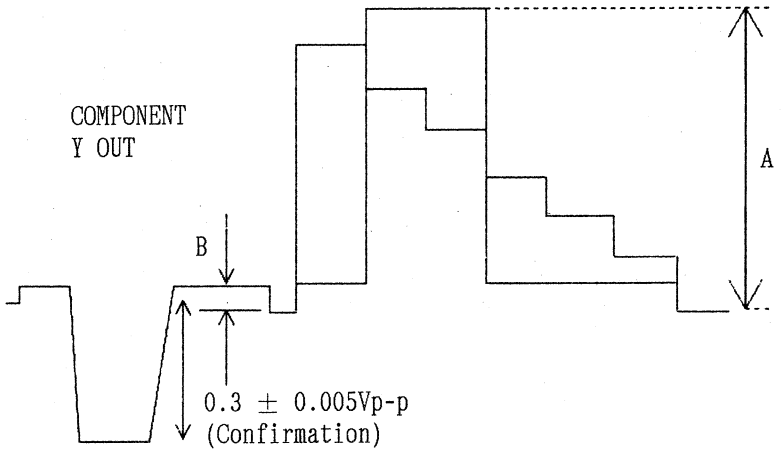

⊘ VR200 A = 0.7 ± 0.007Vp-p

⊘ VR201 B = 0 ± 5mV (DC)

9-9. COMPONENT Pb LEVEL ADJUSTMENT (FOR AU-65/63/62 NTSC & PAL)

(W2 ENCODER)

TEST POINT	MODE	TAPE USED	M.EQ.	INPUT SIGNAL	ADJUSTMENT
COMPONENT Pb OUT	PLAY	ALIGNMENT TAPE COLOR BAR (NTSC 75%) (PAL 100%)	OSCILLOSCOPE (with 75Ω terminator)	---------	VR203 (PB. G) VR204 (PB. DC)

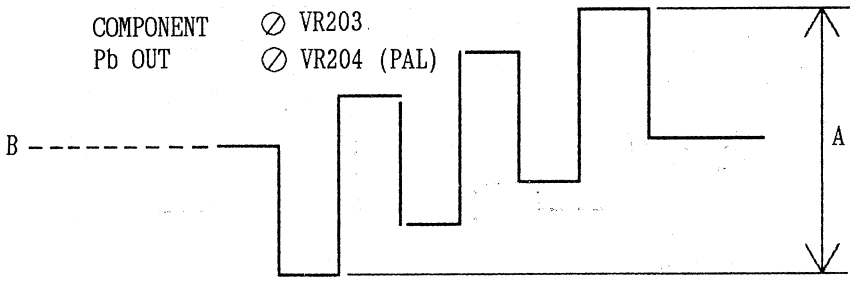

NTSC : A = 0.486 ± 0.005Vp-p
PAL : A = 0.7 ± 0.007Vp-p
"B" portion DC voltage = 0 ± 20mV

9-10. ID PULSE ADJUSTMENT (FOR AU-65/63/62 NTSC & PAL)

(W2 ENCODER)

TEST POINT	MODE	TAPE USED	M.EQ.	INPUT SIGNAL	ADJUSTMENT
COMPONENT Pb OUT	PLAY	ALIGNMENT TAPE COLOR BAR VISC	OSCILLOSCOPE (with 75Ω terminator)	---------	VR212 (ID BAL)

Step 1.
MACHINE CONDITION

Refer to SET UP Conditions at the beginning of this SECTION (ENCODER - W2).

Step 2.

1. Adjust VR212 so that the ID pulse levels A and B are equal (See fig.)

2. Confirm that the ID pulse level is

NTSC : A = B = 0.26 ~ 0.35V.
PAL : A = B = 0.3 ~ 0.35V

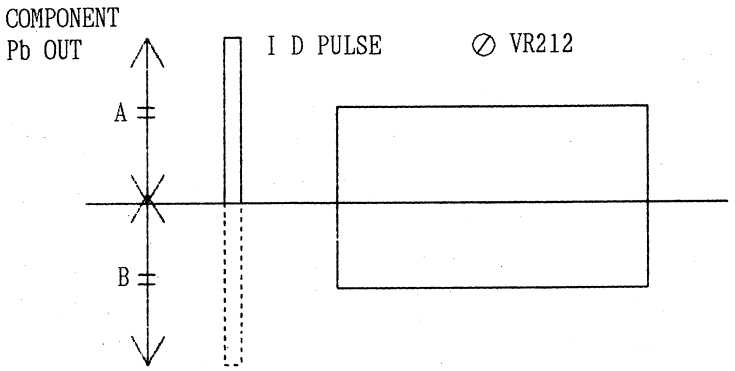

NTSC A = B = 0.26 ~ 0.35Vp-p
PAL A = B = 0.3 ~ 0.35Vp-p

9-11. COMPONENT Pr LEVEL ADJUSTMENT (FOR AU-65/63/62 NTSC & PAL)

(W2 ENCODER)

TEST POINT	MODE	TAPE USED	M.EQ.	INPUT SIGNAL	ADJUSTMENT
COMPONENT Pr OUT	PLAY	ALIGNMENT TAPE COLOR BAR (NTSC 75%) (PAL 100%)	OSCILLOSCOPE (with 75Ω terminator)	---------	VR205 (PR. G) VR206 (PR. DC)
Step 1. MACHINE CONDITION			Refer to SET UP Conditions at the beginning of this SECTION (ENCODER - W2).		

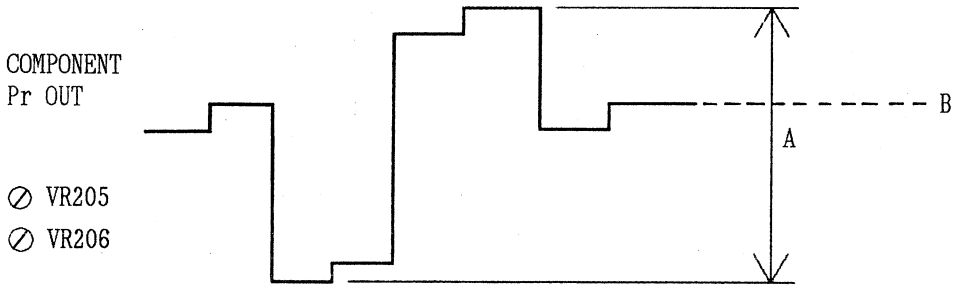

NTSC A = 0.486 ± 0.005Vp-p
PAL A = 0.7 ± 0.007Vp-p
"B" portion DC voltage 0 ± 20mVp-p

9-12. VIDEO BLANKING DC ADJUSTMENT (FOR AU-65/63/62 NTSC & PAL)

(W2 ENCODER)

TEST POINT	MODE	TAPE USED	M.EQ.	INPUT SIGNAL	ADJUSTMENT
VIDEO 2 OUT	EJECT	-----	OSCILLOSCOPE	---------	VR503 (V1, BLK, DC)

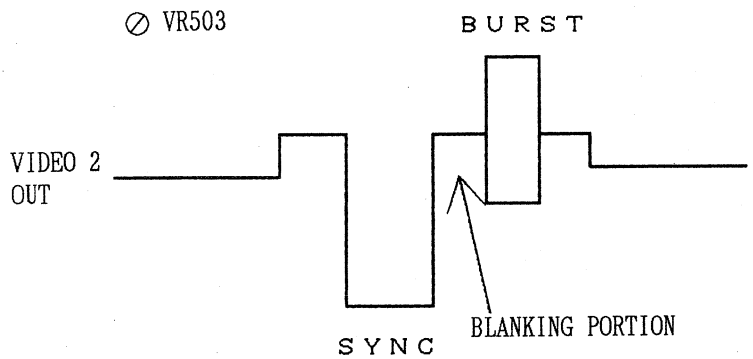

VIDEO DC BLANKING LEVEL = 0 ± 20mV

9-13. VIDEO 2 OUTPUT LEVEL ADJUSTMENT (FOR AU-65/63/62 NTSC & PAL)

(W2 ENCODER)

TEST POINT	MODE	TAPE USED	M.EQ.	INPUT SIGNAL	ADJUSTMENT
VIDEO 2 OUT	PLAY	ALIGNMENT TAPE COLOR BAR (NTSC 75%) (PAL 100%)	OSCILLOSCOPE (with 75Ω terminator)	---------	VR501 (VIDEO. G) VR502 (VIDEO. DC)

Step 1.
MACHINE CONDITION

Refer to SET UP Conditions at the beginning of this SECTION (ENCODER - W2).

Step 2. [NTSC]

1. Adjust VR501 so that the video level (A) is 0.714 ± 0.007Vp-p. (NTSC)
2. Adjust VR502 so that the video DC LEVEL (B) is 0 ± 5mV DC.

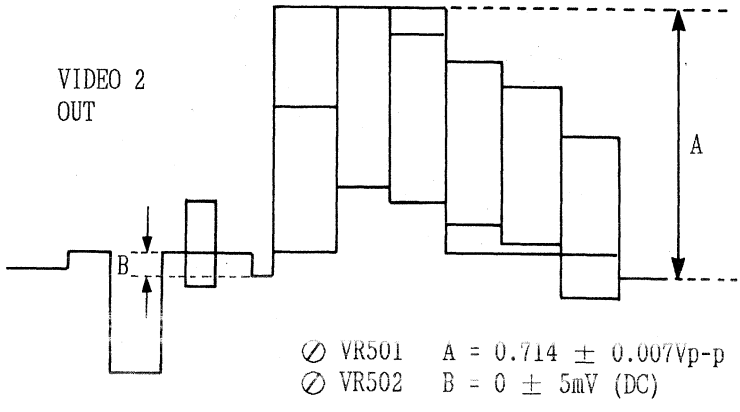

Step 2. [PAL]

1. Adjust VR501 so that the video level (A) is 0.7 ± 0.007Vp-p (PAL).
2. Adjust VR502 so that the Vidoe DC level (B) is 0 ± 5mV DC.

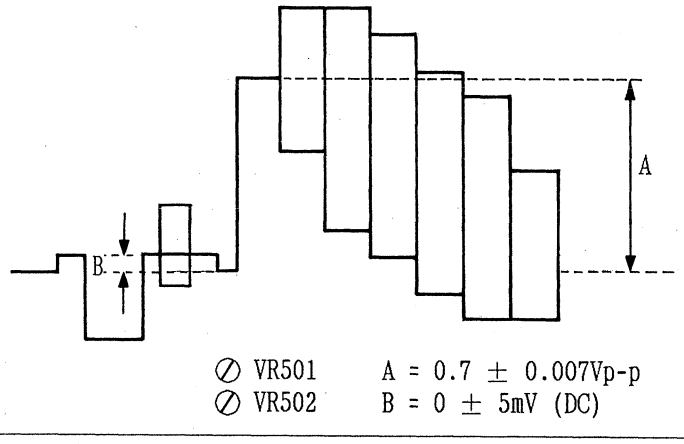

9-14. BURST ADJUSTMENT (FOR AU-65/63/62 NTSC & PAL)

(W2 ENCODER)

TEST POINT	MODE	TAPE USED	M.EQ.	INPUT SIGNAL	ADJUSTMENT
VIDEO 2 OUT	E-E (EJECT)	-----	OSCILLOSCOPE	COMPONENT 100% COLOR BAR	VR510 (BF ϕ) VR511 (BF. WID)

NTSC SPECIFICATIONS

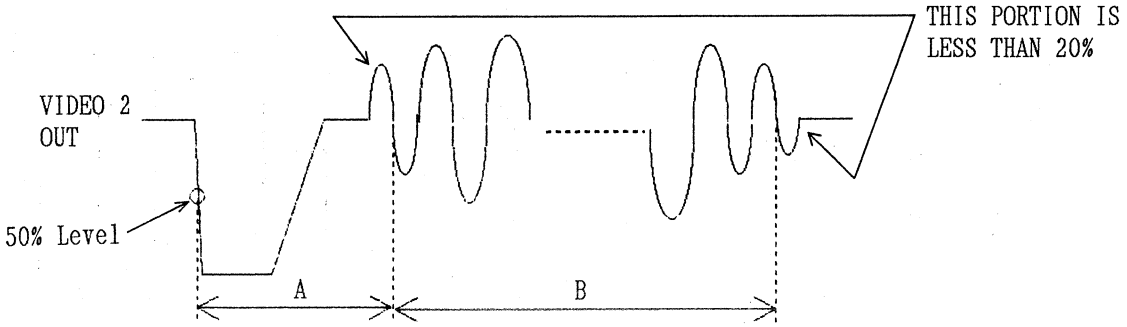

VIDEO 2 OUT THIS PORTION IS LESS THAN 20%

BURST POSITION : A = 5.3 ± 0.1 μsec.
(⊘ VR510)

BURST WIDTH : B = 9 ± 1 cycle
(⊘ VR511) (2.51 ± 0.29 μsec).

PAL SPECIFICATIONS

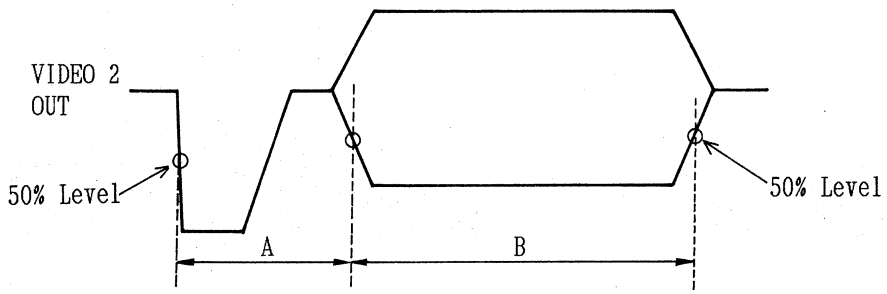

BURST POSITION : A = 5.6 ± 0.1 μsec.
(⊘ VR510)

BURST WIDTH : B = 2.25 ± 0.23 μsec.
(⊘ VR511)

9-15. VIDEO BURST LEVEL ADJUSTMENT (FOR AU-65/63/62 NTSC & PAL)

(W2 ENCODER)

TEST POINT	MODE	TAPE USED	M.EQ.	INPUT SIGNAL	ADJUSTMENT
VIDEO 2 OUT	E-E (EJECT)	-----	OSCILLOSCOPE (with 75Ω terminator)	---------	VR513 (V1. BURST. G) VR512 (BURST BAL)

1. Adjust VR513 so that the burst level (A) is
   NTSC 0.286 ± 0.004Vp-p
   PAL 0.3 ± 0.004Vp-p

2. Adjust VR512 so that the carrier leak is nulled.

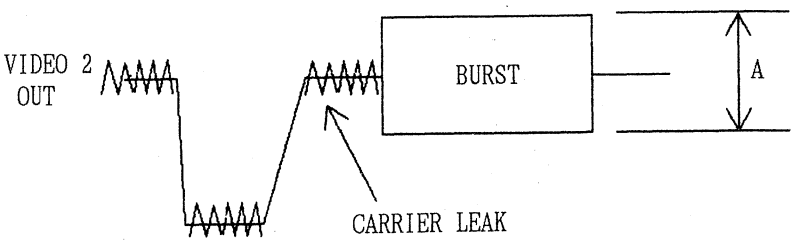

BURST LEVEL (⊘ VR513) : NTSC A = 0.286 ± 0.004Vp-p
PAL A = 0.3 ± 0.004Vp-p

CARRIER LEAK (⊘ VR512) → NULLED (less than 3mVp-p)

9-16. CARRIER LEAKAGE ADJUSTMENT (FOR AU-65/63/62 NTSC & PAL)

(W2 ENCODER)

TEST POINT	MODE	TAPE USED	M.EQ.	INPUT SIGNAL	ADJUSTMENT
VIDEO 2 OUT	PLAY	ALIGNMENT TAPE COLOR BAR	OSCILLOSCOPE (with 75Ω terminator)	---------	VR505 (PB BAL) VR506 (PR BAL)

1. Adjust VR505 and VR506 so that the carrier leakage of the white portion is nulled.

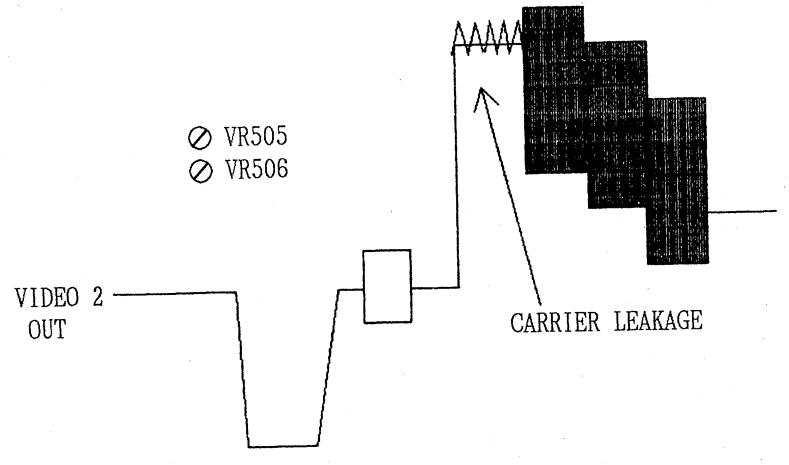

SPEC : CARRIER LEAKAGE IS LESS THAN 3mVp-p

2. If it is not, check the C A/D PEDESTAL VOLTAGE ADJ. (9-3)

9-17. VIDEO OUTPUT VECTOR ADJUSTMENT (FOR AU-65/63/62 NTSC & PAL)

(W2 ENCODER)

TEST POINT	MODE	TAPE USED	M.EQ.	INPUT SIGNAL	ADJUSTMENT
VIDEO 2 OUT	PLAY	ALIGNMENT COLOR BAR (NTSC 75%) (PAL 100%)	VECTOR SCOPE (or TEK 1750)	---------	VR209 (UV BAL) VR507 (VIDEO. CG) VR515 (HUE. OFS1) VR516 (QUAD) VR517 (HUE. OFS2)

Step 1.
MACHINE CONDITION

Refer to SET UP Conditions at the beginning of this SECTION (ENCODER - W2).

Step 2. [NTSC]
SET TO
1. VR517 : CENTER POSITION (FOR USER VR)
2. Adjust VR209/VR507/VR515/VR516 so that each of the vectors phase and levels are in the 2% Box of the vector scope.

VIDEO OUT 2

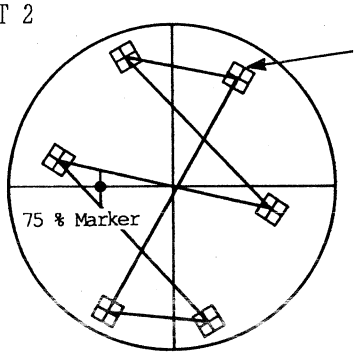

[NTSC]

Step 2. [PAL]

1. VR517 : CENTER POSITION (FOR USER VR)

2. Adjust VR209/VR507/VR515/VR516 so that each of the vectors phase and levels are in the 2% Box of the vector scope.

VIDEO OUT 2

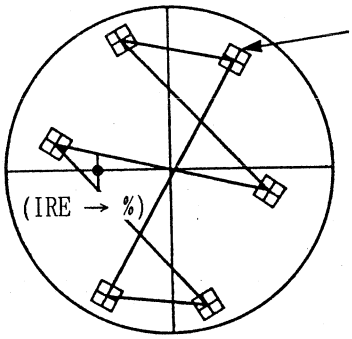

[PAL]

9-18. COMPONENT Y/C TIMING ADJUSTMENT (FOR AU-65/63/62 NTSC & PAL)

(W2 ENCODER)

TEST POINT	MODE	TAPE USED	M.EQ.	INPUT SIGNAL	ADJUSTMENT
COMPONENT Y OUT Pr OUT	PLAY	ALIGNMENT TAPE COLOR BAR	OSCILLOSCOPE OR W.F.M.	---------	VR213 (Y/Pr) Y/C TIMING PRESET VR (on Front Sub Panel) Y/C TIMING MANUAL VR (on Front Sub Panel)

Step 1.

1. Set the Y/C DELAY SW on the Front Sub Panel to MANUAL mode.

2. SCOPE CH1 : COMPONENT Y OUT (Ref.)
   SCOPE CH2 : COMPONENT Pb OUT

3. Adjust VR211 so that center of range which be able to be control by Y/C DELAY MANUAL VR, is Y/Pb timing 0sec. point.

4. Set the Y/C DELAY SW on the Front Sub Panel to PRESET mode.

5. Adjust the Y/C DELAY PRESET VR on the Front Sub Panel so that Y/Pb timing is 0 ± 10 n sec.

6. SCOPE CH1 : COMPONENT Y OUT (Ref.)
   SCOPE CH2 : COMPONENT Pr OUT

7. Adjust VR213 so that Y/Pr timing is 0 ± 10 n sec.

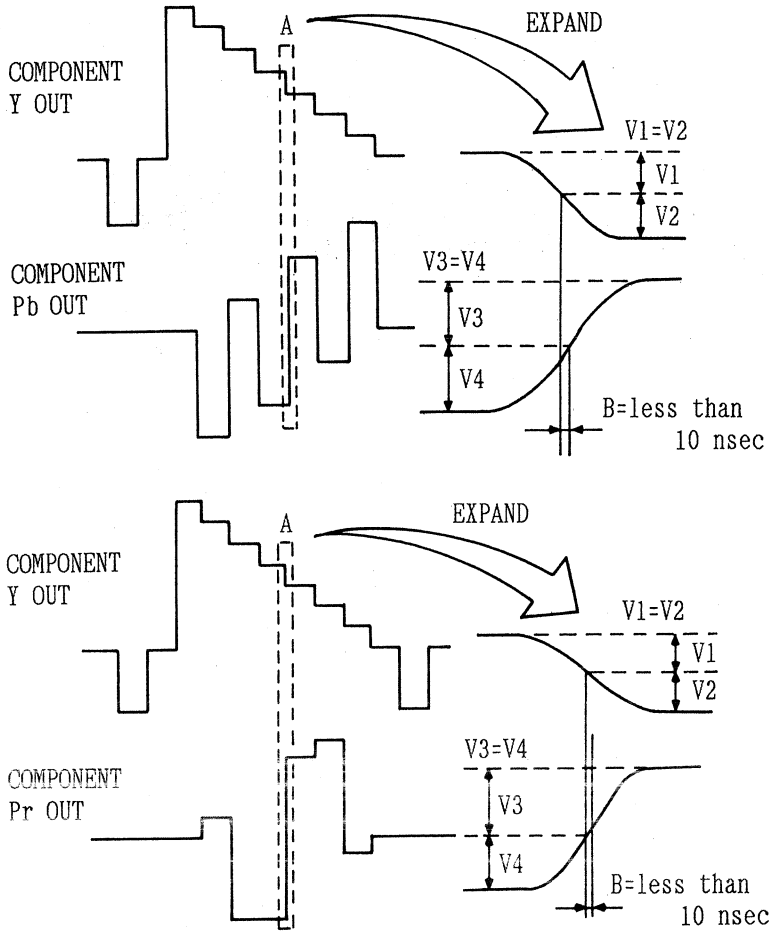

9-19. COMPOSITE Y/C TIMING ADJUSTMENT (FOR AU-65/63/62 NTSC & PAL)

(W2 ENCODER)

TEST POINT	MODE	TAPE USED	M.EQ.	INPUT SIGNAL	ADJUSTMENT
VIDEO 2 OUT	PLAY	ALIGNMENT TAPE PULSE & BAR (Y/C TIMING)	WAVEFORM MONITOR	---------	VR207 (Y/U) VR208 (Y/V)

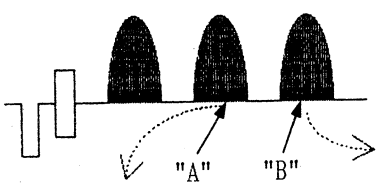

Adjust VR207 so the "B" portion is flat

Adjust VR208 so the "A" portion is flat

9-20. VIDEO 1 OUTPUT LEVEL CONFIRMATION (FOR AU-65/63/62 NTSC & PAL)

(W2 ENCODER)

TEST POINT	MODE	TAPE USED	M.EQ.	INPUT SIGNAL	ADJUSTMENT
VIDEO 1 OUT	PLAY	ALIGNMENT TAPE COLOR BAR (NTSC 75%) (PAL 100%)	OSCILLOSCOPE (with 75Ω termination)	---------	VR210 (SYNC G.) VR501 (VIDEO G.) VR513 (BURST G.)

Step 1.
MACHINE CONDITION

Refer to SET UP Conditions at the beginning of this SECTION (ENCODER - W2).

Step 2. [NTSC]

1. Confirm the following specifications.

[NTSC]
1) VIDEO LEVEL (A) = 0.714 ± 0.01Vp-p
2) SYNC LEVEL (B) = 0.286 ± 0.004Vp-p
3) BURST LEVEL (C) = 0.286 ± 0.004Vp-p

2. If it is not within specification, readjust VR210, VR501, VR513 (9-6 COMPOSITE SYNC LEVEL, 9-13 VIDEO 2 OUTPUT LEVEL, 9-15 VIDEO BURST LEVEL.)

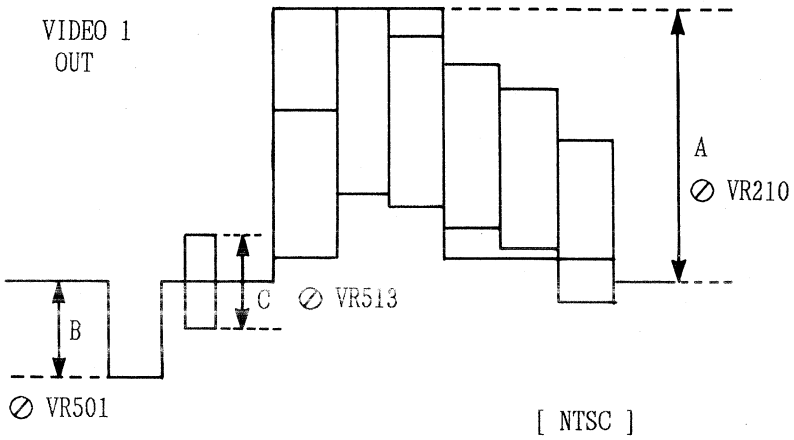

[NTSC]

Step 2. [PAL]

1. Confirm the following specifications.

[PAL]
1) VIDEO LEVEL (A) = 0.7 ± 0.01Vp-p
2) SYNC LEVEL (B) = 0.3 ± 0.006Vp-p
3) BURST LEVEL (C) = 0.3 ± 0.004Vp-p

2. If it is not within specification, readjust VR210, VR501, VR513 (9-6 COMPOSITE SYNC LEVEL, 9-13 VIDEO 2 OUTPUT LEVEL, 9-15 VIDEO BURST LEVEL.)

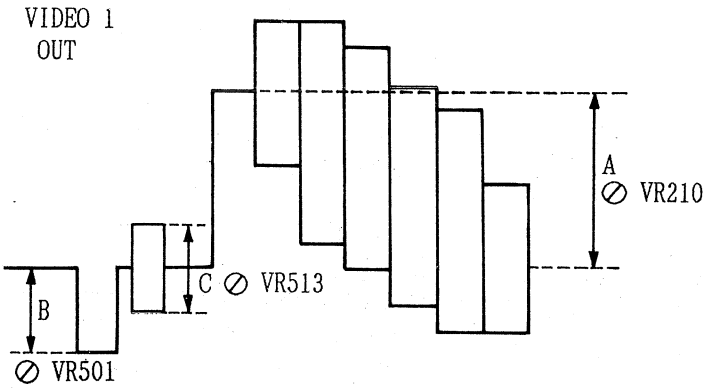

[PAL]

9-21. Y/C OUT VECTOR ADJUSTMENT (1)
(FOR AU-65/63/62 NTSC & PAL)

(W2 ENCODER)

TEST POINT	MODE	TAPE USED	M.EQ.	INPUT SIGNAL	ADJUSTMENT
Y/C OUT (S-VIDEO)	PLAY	ALIGNMENT COLOR BAR (NTSC 75%) (PAL 100%)	VECTOR SCOPE	---------	VR508 (Y/C C. PHASE) VR509 (Y/C C. G)

Step 1. [CONNECTION]

1. Please use S-Video to BNC Conversion CONNECTOR (4P→BNC).
2. Connect the vector scope to Y & C Output through the conversion cable as shown in figure.

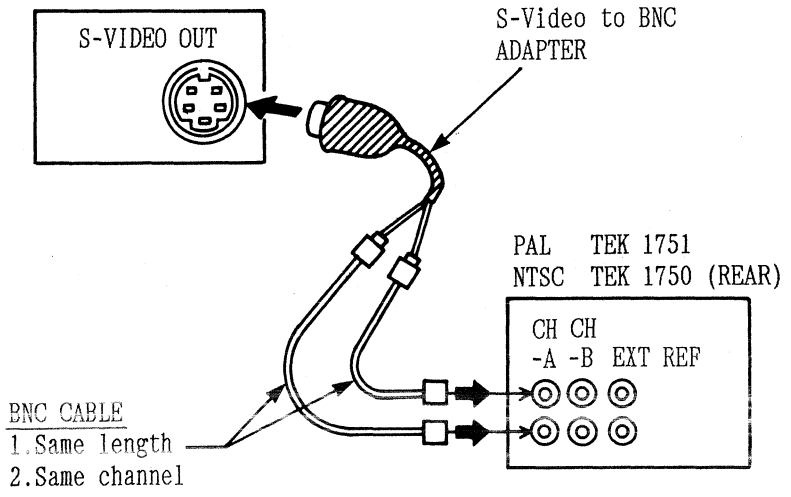

Step 2. [NTSC]

1. Adjust VR508 and VR509 so that the each vector is within the 2% box on the vector scope.

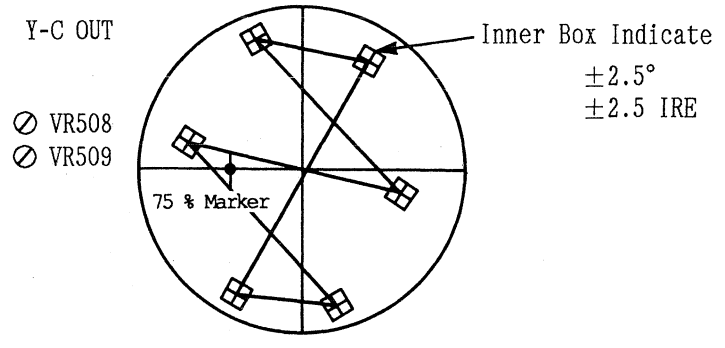

[NTSC]

Step 2. [PAL]

1. Connect the vector scope to signal generator, and set the vector scope the burst level 100%
2. Reconnect the vector scope to S-VIDEO OUT on the Rear Panel. (Refer to Step 1.)
3. Adjust VR508 and VR509 so that the each vector is within the 2% box on the vector scope.

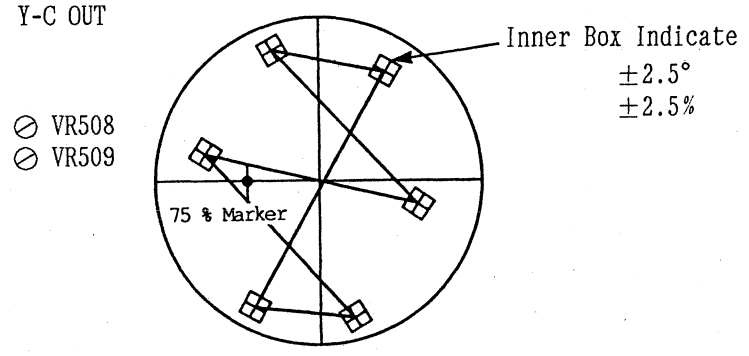

[PAL]

9-22. Y/C OUT VECTOR ADJUSTMENT (2) (FOR AU-65/63/62 NTSC & PAL)

(W2 ENCODER)

TEST POINT	MODE	TAPE USED	M.EQ.	INPUT SIGNAL	ADJUSTMENT
Y/C OUT	PLAY	ALIGNMENT COLOR BAR (NTSC 75%) (PAL 100%)	OSCILLOSCOPE (with 75Ω terminator)	---------	VR514 (Y/C BURST. G)
NTSC : BURST LEVEL = 0.286 ± 0.004Vp-p PAL : BURST LEVEL = 0.3 ± 0.004Vp-p					

9-23. VIDEO OUTPUT FREQUENCY RESPONSE ADJUSTMENT (FOR AU-65/63/62 NTSC & PAL)

(W2 ENCODER)

TEST POINT	MODE	TAPE USED	M.EQ.	INPUT SIGNAL	ADJUSTMENT
TP502 TP 1	PLAY	ALIGNMENT TAPE SWEEP	OSCILLOSCOPE	---------	VC501 (VIDEO F.R.)
Step 1. MACHINE CONDITION			1. Refer to SET UP Conditions at the beginning of this SECTION (ENCODER - W2). 2. Connect a jumper wire between F15A (card edge) and GND to cut chroma signal.		
Step 2. [NTSC] 1. SCOPE CH1 : TP 1 (Ref.) SCOPE CH2 : TP502 2. Adjust VC501 so that the frequency response at TP502 is the same as it at TP1.			⊘ VC501 SPECIFICATION [NTSC] TP502 = TP1 Frequency Characteristic is same. (0.5MHz = 100%) (4MHz = 100% ± 2%)		
Step 2. [PAL] 1. SCOPE CH1 : TP 1 (Ref.) SCOPE CH2 : TP502 2. Adjust VC501 so that the frequency response at TP502 is the same as it at TP1.			⊘ VC501 SPECIFICATION [PAL] TP502 = TP1 Frequency Characteristic is same. (0.5MHz = 100%) (4MHz = 100% ± 3%)		

9-24. Y OUTPUT FREQUENCY RESPONSE ADJUSTMENT (FOR AU-65/63/62 NTSC & PAL)

(W2 ENCODER)

TEST POINT	MODE	TAPE USED	M.EQ.	INPUT SIGNAL	ADJUSTMENT
TP202 TP 1	PLAY	ALIGNMENT TAPE SWEEP	OSCILLOSCOPE	---------	VC201 (Y FREQ. RES.)

Step 1. [NTSC] 1. SCOPE CH1 : TP 1 (Ref.) SCOPE CH2 : TP202 2. Adjust VC201 so that the frequency response at TP502 is the same as it at TP1.	⊘ VC201 SPECIFICATION [NTSC] TP202 = TP1 Frequency Characteristic is same. (0.5MHz = 100%) (4MHz = 100% ± 2%)
Step 1. [PAL] 1. SCOPE CH1 : TP 1 (Ref.) SCOPE CH2 : TP202 2. Adjust VC201 so that the frequency response at TP502 is the same as it at TP1.	⊘ VC201 SPECIFICATION [PAL] TP202 = TP1 Frequency Characteristic is same. (0.5MHz = 100%) (4MHz = 100% ± 3%)

9-25. SUPER IMPOSE CHARACTER LEVEL ADJUSTMENT (FOR AU-65/63/62 NTSC & PAL)

(W2 ENCODER)

TEST POINT	MODE	TAPE USED	M.EQ.	INPUT SIGNAL	ADJUSTMENT
TP503	PLAY	ALIGNMENT TAPE COLOR BAR	OSCILLOSCOPE (with 75Ω terminator)	---------	VR504 (V3 BLK. DC.)

Step 1. 1. SCOPE : TP503 2. Check that the Character Level "A" is 1.14 ± 0.1Vp-p as shown. 3. Adjust VR504 so that the DC level of Character is same as DC level of H. Blanking.	TP503 ⊘ VR504 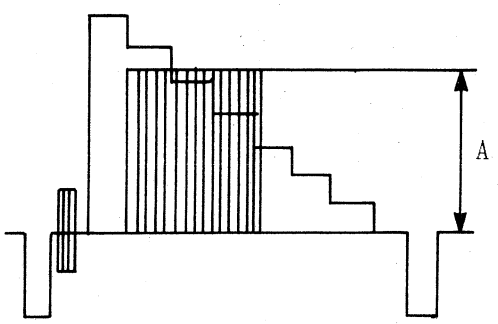

10. TBC & SYNC GEN (W1) BOARD (2/2)

TBC & SYNC GEN. SECTION (2/2) (W1) FLOWCHART FOR AU-65

* BEFORE ADJUSTMENT
The adjustment with this comment is necessary to adjust after the following adjustments are completed.

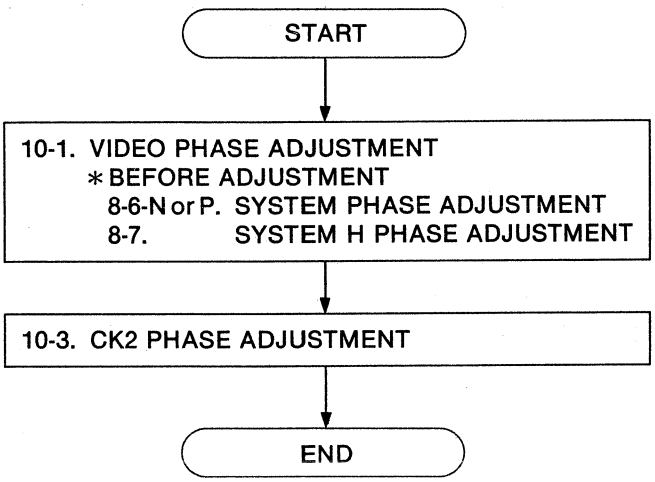

TBC & SYNC GEN. SECTION (2/2) (W1) FLOWCHART FOR AU-63 AND AU-62

* BEFORE ADJUSTMENT
The adjustment with this comment is necessary to adjust after the following adjustments are completed.

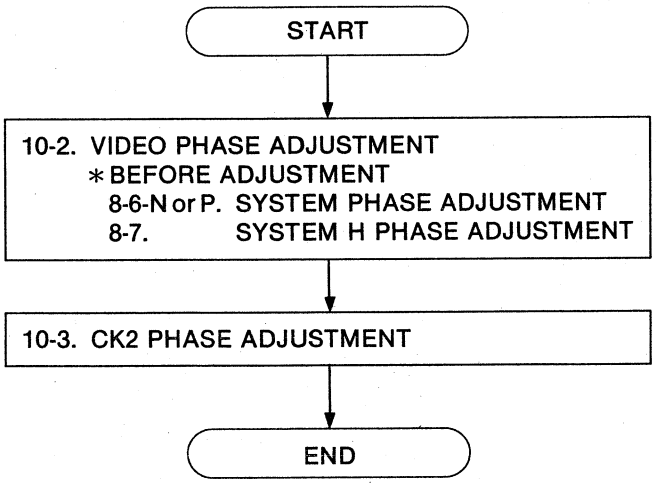

10. TBC & SYNC GEN (W1) BOARD (2/2)

10-1. VIDEO PHASE ADJUSTMENT (FOR AU-65 NTSC & PAL)

(W1 TBC & SYNC GEN)

TEST POINT	MODE	TAPE USED	M.EQ.	INPUT SIGNAL	ADJUSTMENT
VIDEO 2 OUT	E-E (EJECT)	------	SCH METER (NTSC TEK 1750) (PAL TEK 1751)	LINE IN	SW203 (V. PHASE COARSE) VR207 (V. PHASE FINE)

Step 1.

CONNECTION METHOD

SCH METER TRIGGER : EXT

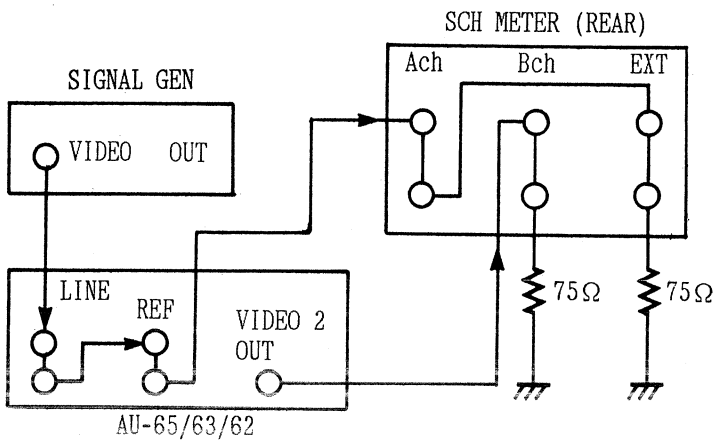

Step 2.

1. Confirm the SYSTEM PHASE Adjustments in TBC & SYNC GEN (W1) 1/2 section.

Step 3.

1. Confirm that the VIDEO phase of VIDEO 2 OUTPUT (B ch of WFM Monitor) is same as VIDEO phase of REF. VIDEO (A ch of WFM Monitor).
2. If it is not, adjust SW203 and VR207 so that the VIDEO phase of VIDEO 2 OUTPUT (Bch of WFM Monitor) and the REF. VIDEO (A ch of WFM Monitor) are the same phase as shown.

Note:
Don't check (A) portion, because this edge is mode by blanking circuit. So, check other portion.

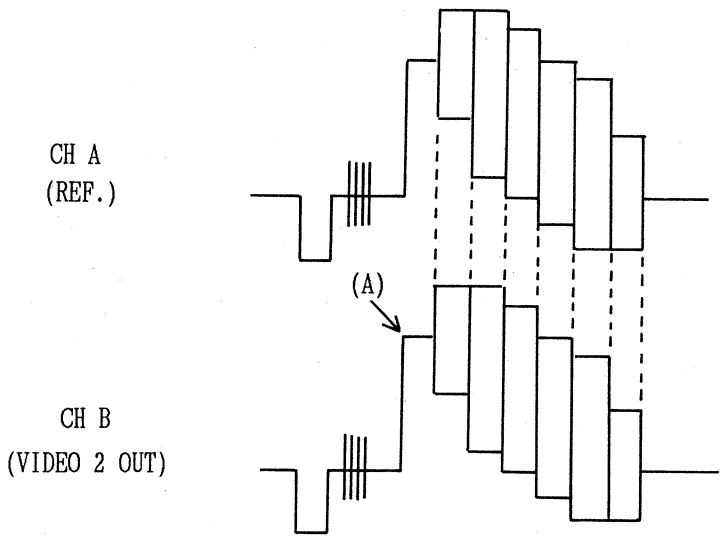

10-2. VIDEO PHASE ADJUSTMENT (FOR AU-63/62 NTSC & PAL)

(W1 TBC & SYNC GEN)

TEST POINT	MODE	TAPE USED	M.EQ.	INPUT SIGNAL	ADJUSTMENT
VIDEO 2 OUT	PLAY	ALIGNMENT TAPE COLOR BAR	SCH METER (NTSC TEK 1750) (PAL TEK 1751)	SCH ADJ. FIXTURE TO REF. IN	SW203 (V. PHASE COARSE) VR207 (V. PHASE FINE)

Step 1.

CONNECTION METHOD

SCH METER TRIGGER : EXT

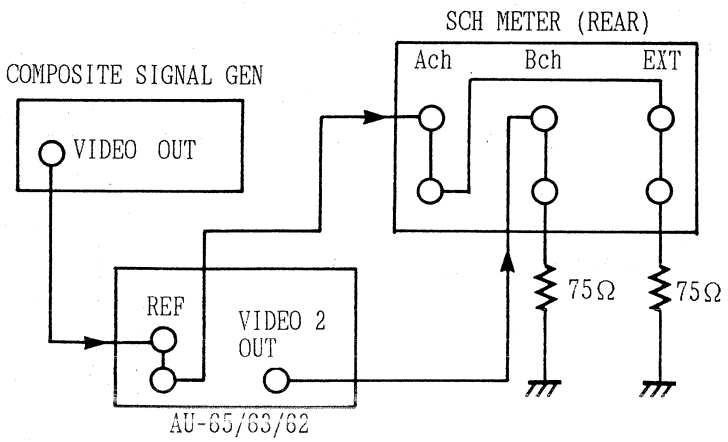

Step 2.

1. Confirm the SYSTEM PHASE Adjustments in TBC & SYNC GEN (W1) 1/2 section.

Step 3.

1. Confirm that the VIDEO phase of VIDEO 2 OUTPUT (B ch of WFM Monitor) is same as VIDEO phase of REF. VIDEO (A ch of WFM Monitor).
2. If it is not, adjust SW203 and VR207 so that the VIDEO phase of VIDEO 2 OUTPUT (Bch of WFM Monitor) and the REF. VIDEO (A ch of WFM Monitor) are the same phase as shown.

Note:
1. Don't check (A) portion, because this edge is made by blacking circuit. So, check other portion.
2. If the VIDEO phase is not same perfectly, adjust the average is the same.

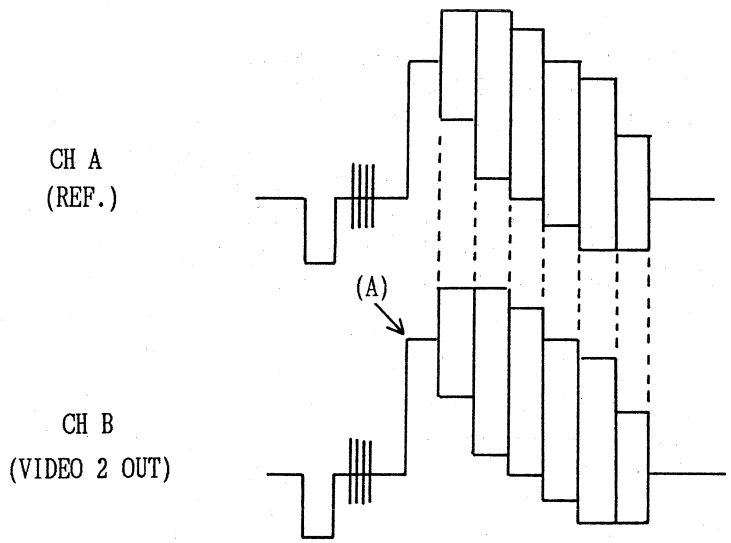

10-3. CK 2 PHASE ADJUSTMENT (FOR AU-65/63/62 NTSC & PAL)

(W1 TBC & SYNC GEN)

TEST POINT	MODE	TAPE USED	M.EQ.	INPUT SIGNAL	ADJUSTMENT
VIDEO 2 OUT	PLAY	ALIGNMENT TAPE VISC	VECTOR SCOPE	---------	VR207 (CK2 PHASE)

Step 1.

MACHINE CONDITION

SW7 (on W1) : OFF

Step 2.

CONNECTION METHOD

SCH METER TRIGGER : EXT

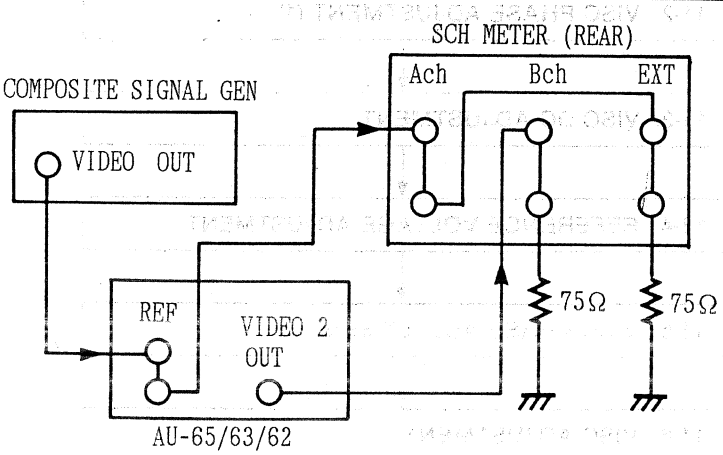

Step 3.

1. Adjust VR207 so that the VISC signal phase is center of Burst axis. (0° ±2°)
2. SW7 : ON

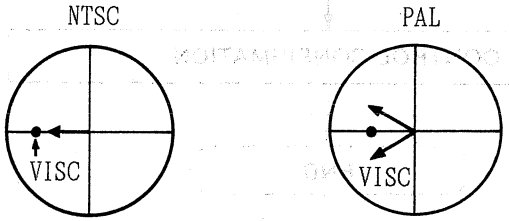

11. ENCODER (W2) BOARD (2/2)
— VISC CONTROL SECTION (PAL ONLY) —

VISC CONTROL SECTION (2/2) (W2) FLOWCHART FOR AU-65, AU-63 AND AU-62, PAL MODEL

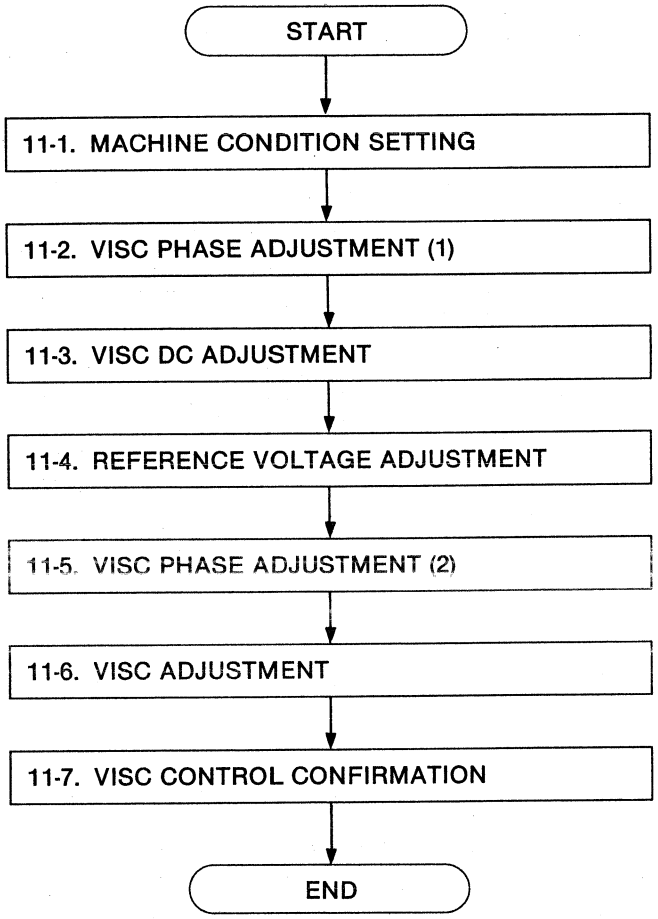

*This Section is PAL only. This Section have no connection with NTSC.

11. ENCODER (W2 BOARD (2/2)
— VISC CONTROL SECTION (PAL ONLY) —

11-1. MACHINE CONDITION SETTING (FOR AU-65/63/62 PAL)

1. CF SELECT SW (on Front Sub Panel)	8F
2. TAPE/EE SELECT (on Pull Out Drawer)	EE
3. HEAD SELECT (on Pull Out Drawer)	R/P
4. SYNC SELECT SW (on Front Sub Panel)	AUTO
5. COMPONENT Y/Pr/Pb LEVEL VR (on Pull Out Drawer)	DETENT POSITION
6. VIDEO LEVEL VR	DETENT POSITION
7. SET UP LEVEL VR	DETENT POSITION
8. CHROMA LEVEL VR	DETENT POSITION
9. HUE VR	DETENT POSITION

11-2. VISC PHASE ADJUSTMENT (1)
(FOR AU-65/63/62 PAL)

(W2 ENCODER)

TEST POINT	MODE	TAPE USED	M.EQ.	INPUT SIGNAL	ADJUSTMENT
TP801 TP802	PLAY	ALIGNMENT TAPE VISC	VECTORSCOPE	---------	VR800 (VISC ϕ1)

Step 1.
MACHINE CONDITION

SW800 (on W2) : OFF
SW801 (on W2) : OFF

Step 2.
CONNECTION METHOD

VECTORSCOPE
(Trigger : EXT)

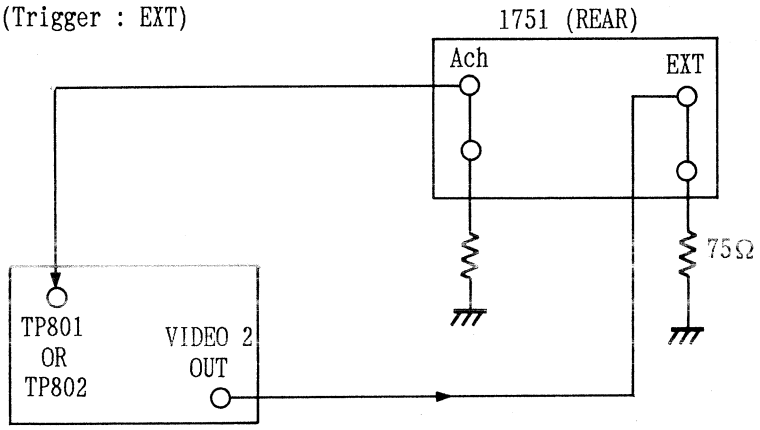

Step 3.

1. Connect the vectorscope to TP801 and set the vectorscope to 12 o'clock position.
2. Connect the vectorscope to TP802 and adjust VR800 so that the phase at TP802 comes to 9 o'clock position.

VR800

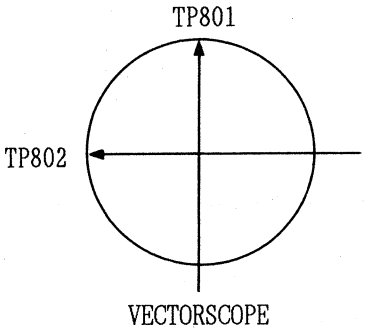

11-3. VISC DC ADJUSTMENT (FOR AU-65/63/62 PAL)

(W2 ENCODER)

TEST POINT	MODE	TAPE USED	M.EQ.	INPUT SIGNAL	ADJUSTMENT
TP803	PLAY	ALIGNMENT TAPE VISC	OSCILLOSCOPE	---------	VR802 (VISC. DC)

Step 1. MACHINE CONDITION	SW800 (on W2) : OFF SW801 (on W2) : OFF
Step 2. SCOPE : TP803 1. Adjust VR802 so that the reading of DC voltage is 0 ± 0.005V.	⊘ VR802 SPECIFICATION : 0 ± 0.005V DC

11-4. REFERENCE VOLTAGE ADJUSTMENT (FOR AU-65/63/62 PAL)

(W2 ENCODER)

TEST POINT	MODE	TAPE USED	M.EQ.	INPUT SIGNAL	ADJUSTMENT
SW801	PLAY	ALIGNMENT TAPE VISC	OSCILLOSCLPE AND VECTORSCOPE	---------	VR803 (REF. VOLT)

Step 1. MACHINE CONDITION	SW800 (on W2) : OFF
Step 2. 1. Adjust VR803 so that the voltage in difference between leads of SW801 becomes 0 ± 0.005V. 2. Confirm that the phase of VISC is not changed even if the SW801 is on and off.	⊘ VR803 SPECIFICATION : 0 ± 0.005V DC

11-5. VISC PHASE ADJUSTMENT (2)
(FOR AU-65/63/62 PAL)

(W2 ENCODER)

TEST POINT	MODE	TAPE USED	M.EQ.	INPUT SIGNAL	ADJUSTMENT
VIDEO 2 OUT	PLAY	ALIGNMENT TAPE VISC	VECTOR SCOPE	---------	VR801 (VISC. ϕ2)

Note:
Confirm the Adjustment of W1 and W2 (1/2), completeness.

Step 1. MACHINE CONDITION	1. Refer to Machine Condition at the beginning of this section. (W2-ENCODER 2/2) 2. SW800 (on W2) → OFF SW801 (on W2) → ON SW 7 (on W1) → OFF
Step 2. 1. Check and mark VR207 on the W1 P.C.Board, and set so that the VISC phase is on the R-Y axis upper portion.	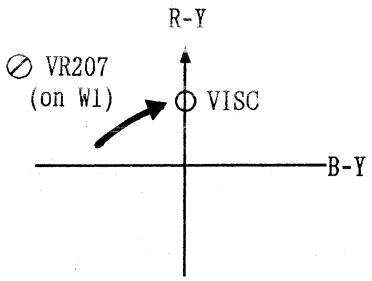
Step 3. 1. Observe the vector scope the VISC phase is pulled in the horizontal axis between the burst when SW800 is "ON" mode. 2. Check the moving speed of VISC with SW800 "ON". It has 2 pattern.	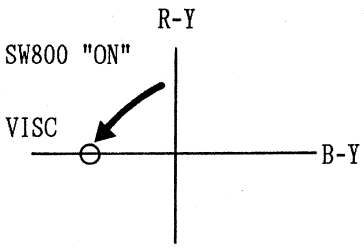 VISC MOVING PATTERN (1) Pulling in VISC is slowly by Analog Control. (2) Pulling in VISC is quick by Digital Control.

Step 4.

1. When VR801 is turned, changing point of moving pattern is appeared in range of VR801.

2. Adjust VR801 so that the VR position is changing point of VISC moving pattern.

Note:
In this adjustment, repeat SW800 "ON" and "OFF".

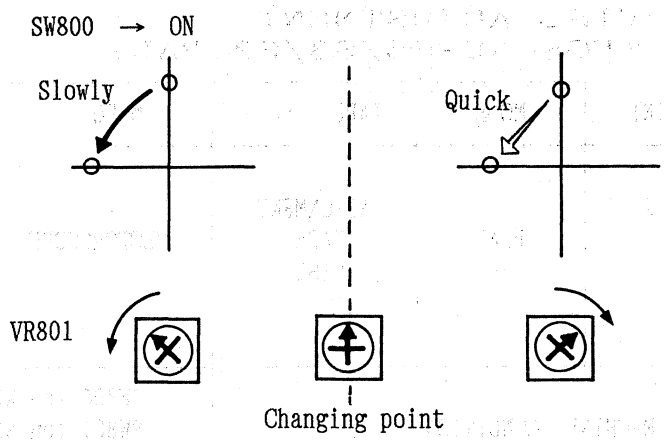

Step 5.

If the changing point of moving pattern is 2 in the range of VR801, adjust this procedure as following.

1. Set the VR801 (on W2) changing points of moving pattern.
2. Reset the VR207 on W1 P.C.Board so that VISC phase is 45°.
3. VR801 have 2 changing points (A) and (B) at VISC 90° condition. When VISC is 45° and SW800 is "ON", one is pulled in U axis slowly but another is quick it.
4. Adjustment position VR is changing point at VISC 90° and slowly pulling as VISC 45°.

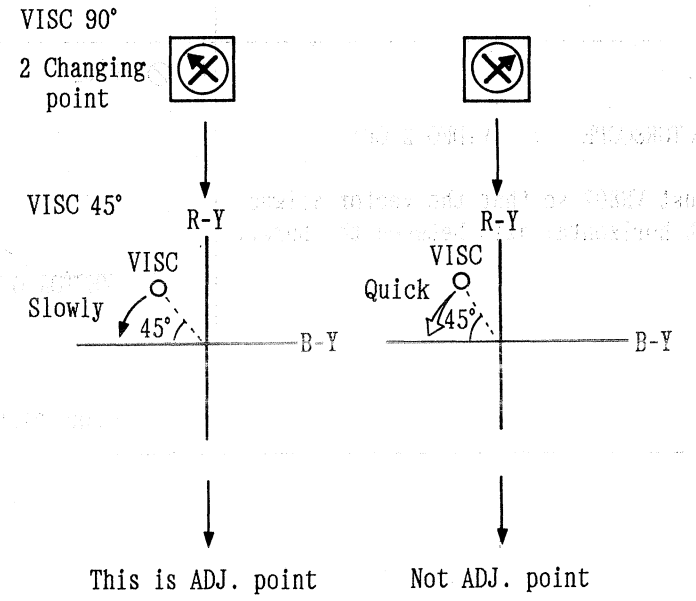

Step 6.

1. Set VR207 on W1 P.C.Board so that VISC phase is R-Y under side.
2. Confirm the function of VISC control is same of Step 3, 4 and 5.

Step 7.

1. After adjustment, set SW800 "OFF" mode.
2. Adjust VR207 on W1 P.C.Board so that the VISC signal is horizontal axis (B-Y) between the burst.

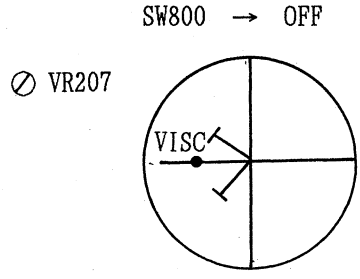

Step 8.

1. Reset SW800 "ON" mode.
2. Reset SW7 on W1 P.C.Board "ON" mode.

SW800 (on W2) → ON

SW 7 (on W1) → ON

11-6. VISC ADJUSTMENT (FOR AU-65/63/62 PAL)

(W2 ENCODER)

TEST POINT	MODE	TAPE USED	M.EQ.	INPUT SIGNAL	ADJUSTMENT
VIDEO 2 OUT	PLAY	ALIGNMENT TAPE VISC	VECTORSCOPE	---------	VR802 (VISC. DC)

Step 1. MACHINE CONDITION	SW800 (on W2) : ON SW801 (on W2) : ON
Step 2. VECTORSCOPE : VIDEO 2 OUT 1. Adjust VR802 so that the vector aligns with horizontal axis between the burst.	⊘ VR802 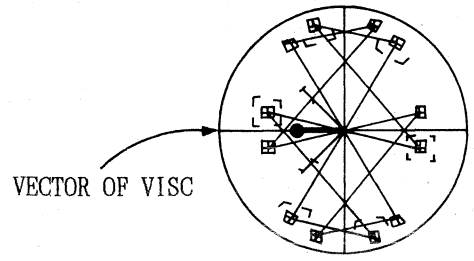 PHASE DIFFERENCE BTWEEN BURST AND VISC = 0 ± 5°

11-7. VISC CONTROL CONFIRMATION (FOR AU-65/63/62 PAL)

(W2 ENCODER)

TEST POINT	MODE	TAPE USED	M.EQ.	INPUT SIGNAL	ADJUSTMENT
VIDEO 2 OUT	PLAY	ALIGNMENT TAPE VISC	VECTOR SCOPE	---------	VR206 (on W1) (CK2 PHASE)

Step 1.
MACHINE CONDITION

SW800 (on W2) : OFF → ON
SW801 (on W2) : OFF → ON

Step 2.

CONNECTION METHOD

1. Set the SW800 to off and set the CK2 phase VR206 so that the VISC phase is -120° apart from burst phase. Then confirm that the VISC phase aligns to horizontal axis between the burst when turning SW800 on.
2. Next, set the SW801 to off and set the CK2 phase VR206 so that the VISC phase is +120° apart from burst phase. Then confirm that the VISC phase aligns to horizontal axis between the barst when turning SW800 on.
3. If it does not work correctly, repeat the CK2 phase adjustment (VR206).

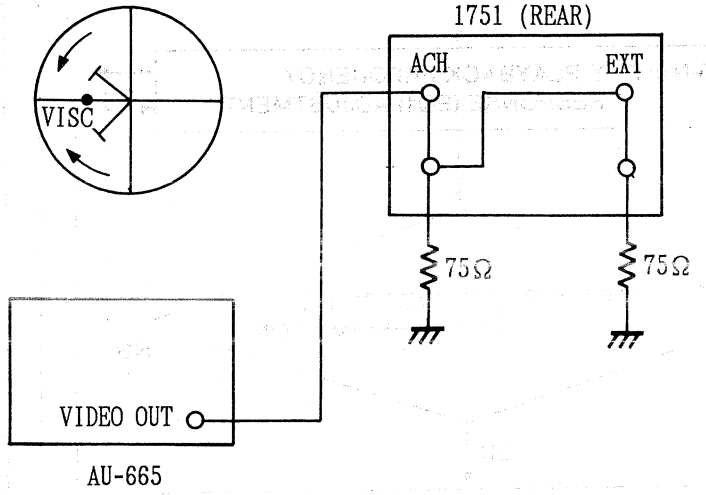

12. MODULATION & DEMODULATION (W3) BOARD (2/2)

MODULATION & DEMODULATION SECTION (2/2) (W3) FLOWCHART FOR AU-65

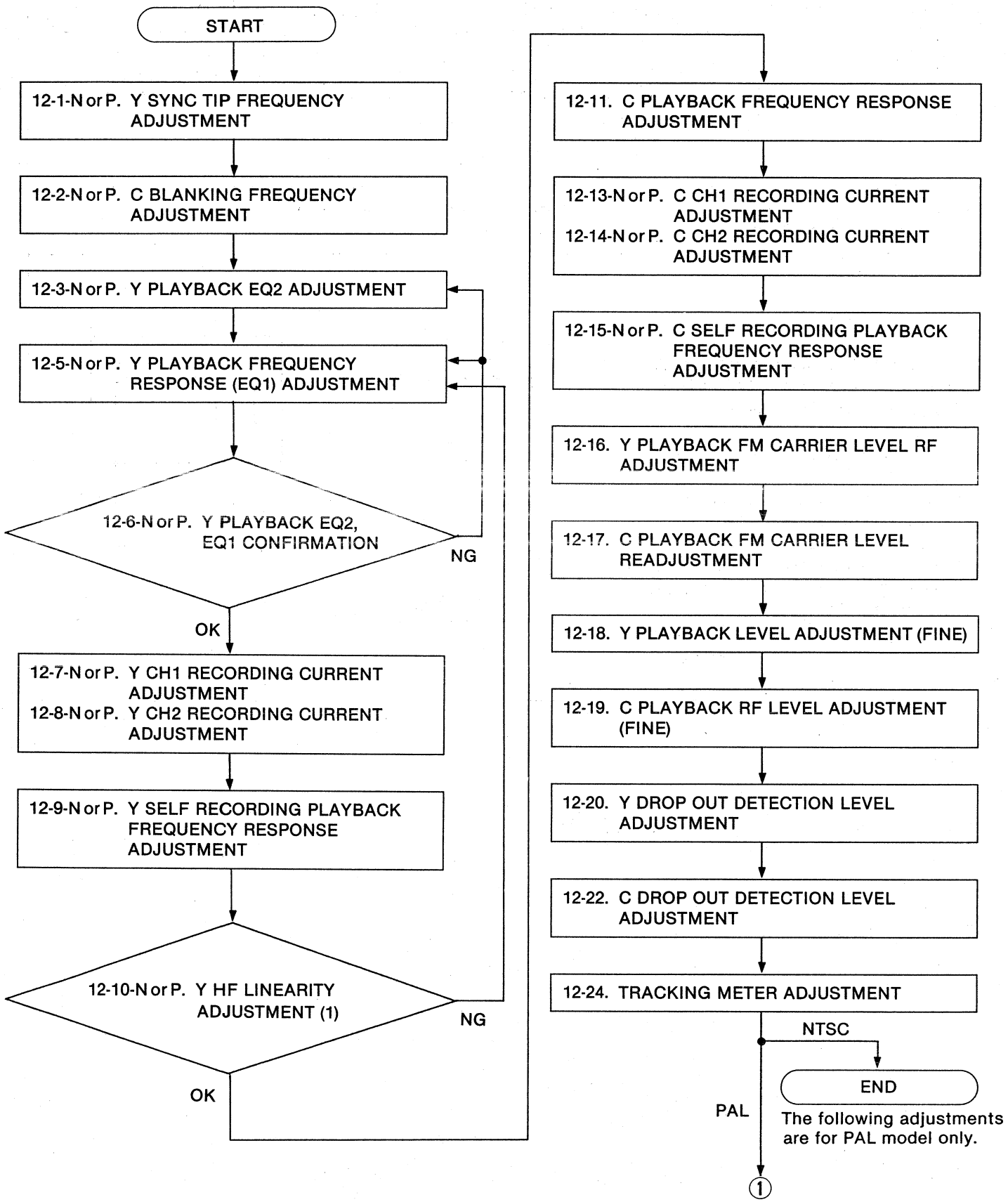

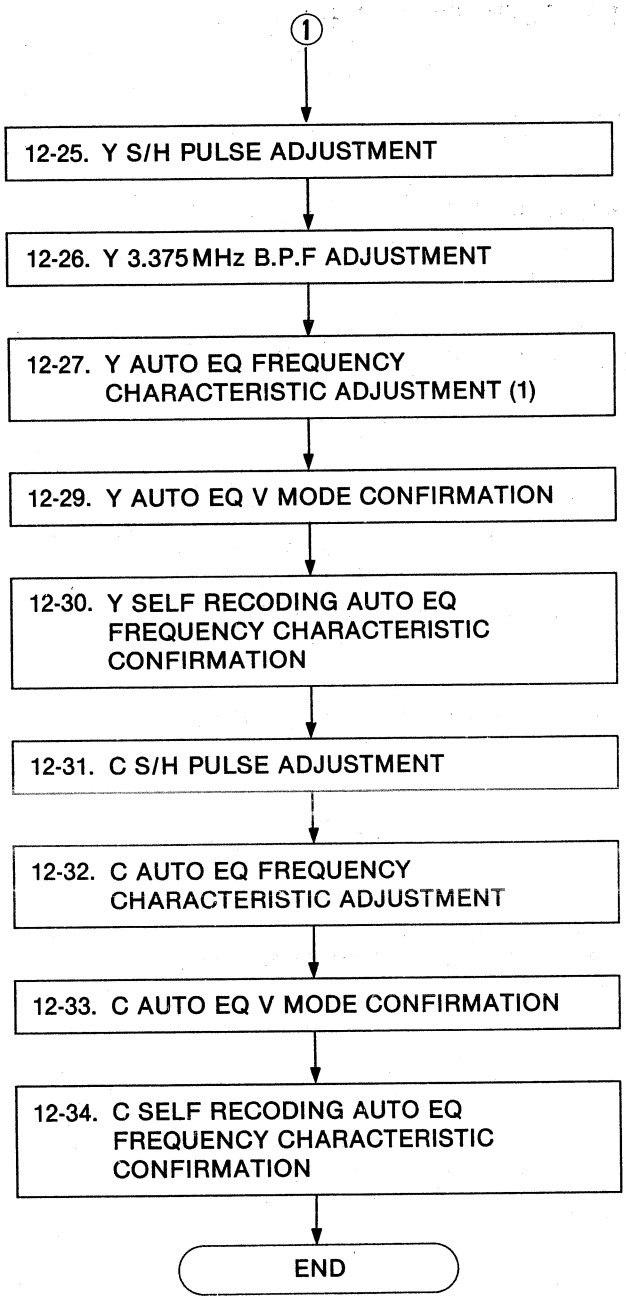
①
12-25. Y S/H PULSE ADJUSTMENT
12-26. Y 3.375MHz B.P.F ADJUSTMENT
12-27. Y AUTO EQ FREQUENCY CHARACTERISTIC ADJUSTMENT (1)
12-29. Y AUTO EQ V MODE CONFIRMATION
12-30. Y SELF RECODING AUTO EQ FREQUENCY CHARACTERISTIC CONFIRMATION
12-31. C S/H PULSE ADJUSTMENT
12-32. C AUTO EQ FREQUENCY CHARACTERISTIC ADJUSTMENT
12-33. C AUTO EQ V MODE CONFIRMATION
12-34. C SELF RECODING AUTO EQ FREQUENCY CHARACTERISTIC CONFIRMATION
END

MODULATION & DEMODULATION SECTION (2/2) (W3) FLOWCHART FOR AU-63

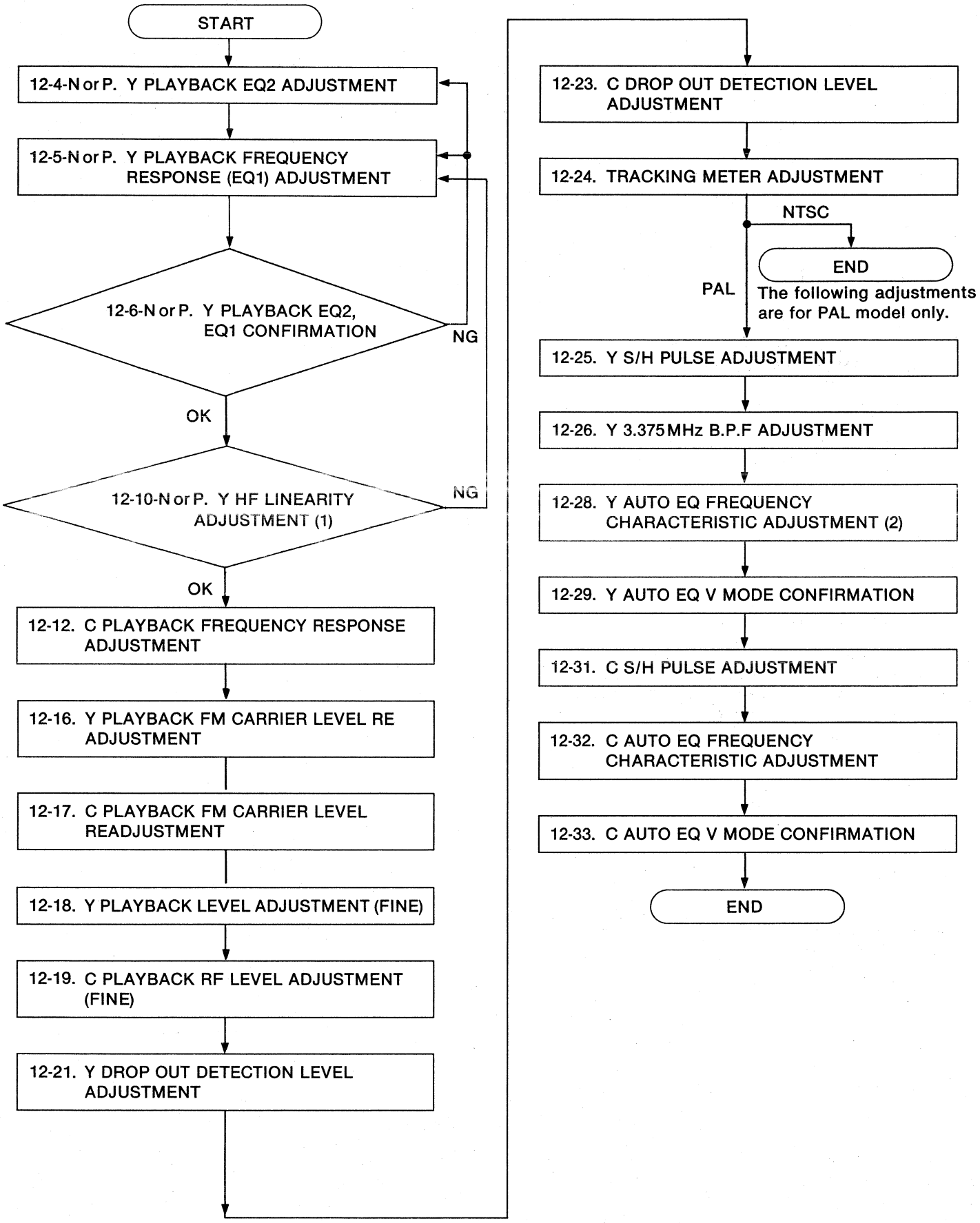

MODULATION & DEMODULATION SECTION (2/2) (W3) FLOWCHART FOR AU-62

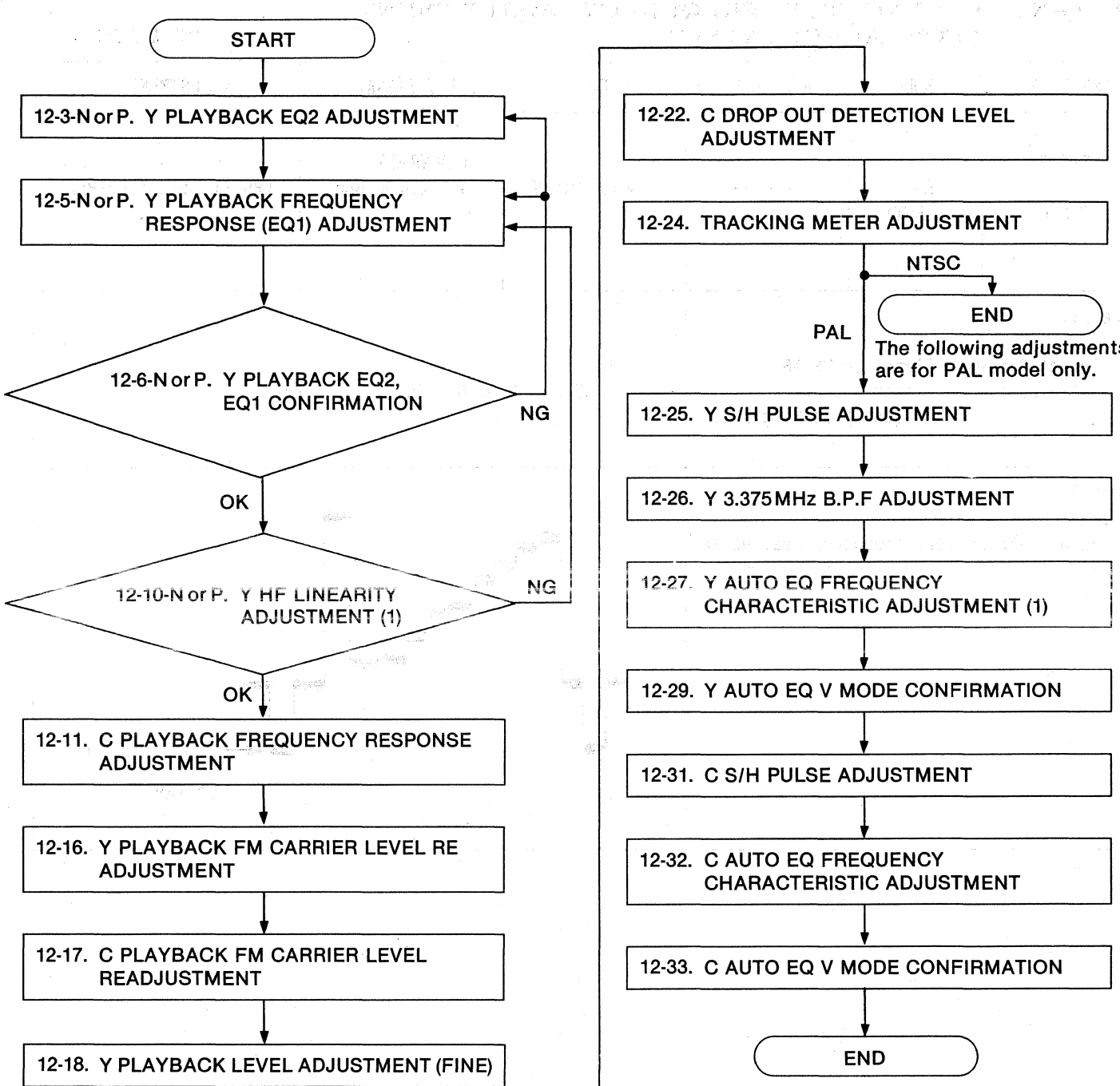

12. MODULATION & DEMODULATION (W3) BOARD (2/2)

12-1-N. Y SYNC TIP FREQUENCY ADJUSTMENT (FOR AU-65 NTSC)

(W3 MOD & DEMOD)

TEST POINT	MODE	TAPE USED	M.EQ.	INPUT SIGNAL	ADJUSTMENT
TP309 TP316	E-E (EJECT)	-------	OSCILLOSCOPE	COMPONENT 75% COLOR BAR	VR9 (Y SYNC TIP FREQ.)

Step 1. 1. Inject Sinewave Signal to TP316 2. Set Sinewave Generator Output Frequency Setting To :	5.6 MHz ± 0.01 MHz (0.2 ~ 0.4Vp-p)
Step 2. 1. Adjust VR9 so that frequency beat noise is nullified at sync tip portion as shown in figure.	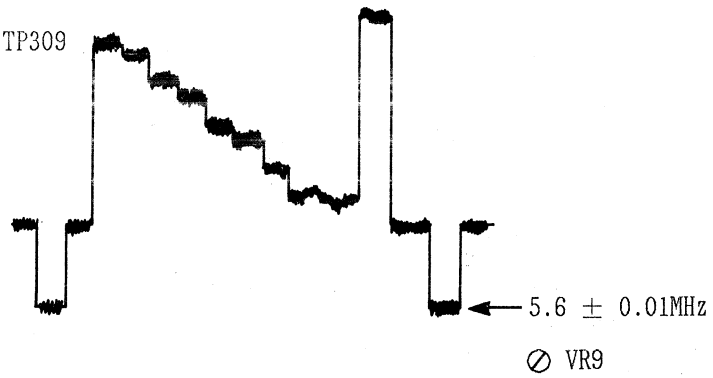

12-1-P. Y SYNC TIP FREQUENCY ADJUSTMENT (FOR AU-65 PAL)

(W3 MOD & DEMOD)

TEST POINT	MODE	TAPE USED	M.EQ.	INPUT SIGNAL	ADJUSTMENT
TP309 TP316	E-E (EJECT)	-------	OSCILLOSCOPE	COMPONENT COLOR BAR	VR9 (Y SYNC TIP FREQ.)

Step 1. 1. Inject Sinewave Signal to TP316 2. Set Sinewave Generator Output Frequency Setting To :	6.63 MHz ± 0.01 MHz (0.2 ~ 0.4Vp-p)
Step 2. 1. Adjust VR9 so that frequency beat noise is nullified at sync tip portion as shown in figure.	TP309 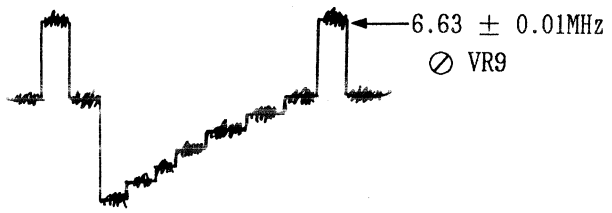

12-2-N. C BLANKING FREQUENCY ADJUSTMENT (FOR AU-65 NTSC)

(W3 MOD & DEMOD)

TEST POINT	MODE	TAPE USED	M.EQ.	INPUT SIGNAL	ADJUSTMENT
TP706 TP711	E-E (EJECT)	-------	OSCILLOSCOPE	Y/CTCM 75% COLOR BAR	VR206 (C BLK FREQ.)
Step 1. 1. Inject Sinewave Signal to TP711 2. Set Sinewave Generator Output Frequency Setting To :			4.8 MHz ± 0.01 MHz (0.2 ~0.4Vp-p)		
Step 2. 1. SCOPE : TP706 2. Adjust VR206 so that frequency beat noise is nullified at cyan portion of Pr signal as shown in figure.			TP706 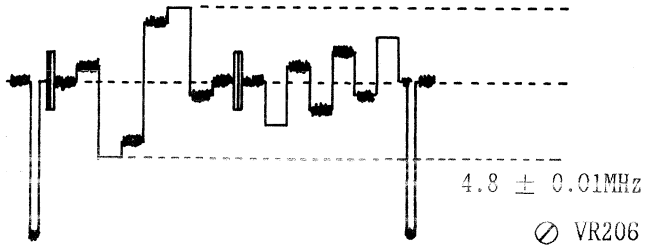 		

12-2-P. C BLANKING FREQUENCY ADJUSTMENT (FOR AU-65 PAL)

(W3 MOD & DEMOD)

TEST POINT	MODE	TAPE USED	M.EQ.	INPUT SIGNAL	ADJUSTMENT
TP706 TP711	E-E (EJECT)	-------	OSCILLOSCOPE	Y/CTCM COLOR BAR	VR206 (C BLK FREQ.)
Step 1. 1. Inject Sinewave Signal to TP711 2. Set Sinewave Generator Output Frequency Setting To :			5.4 MHz ± 0.01 MHz (0.2 ~0.4Vp-p)		
Step 2. 1. SCOPE : TP706 2. Adjust VR206 so that frequency beat noise is nullified at cyan portion of Pr signal as shown in figure.			TP706 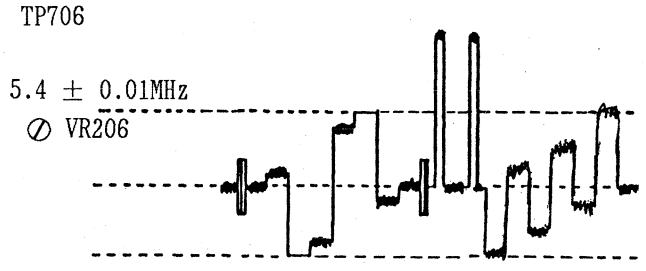 		

12-3-N. Y PLAYBACK EQ2 ADJUSTMENT (FOR AU-62/AU-65 NTSC)

(W3 MOD & DEMOD)

TEST POINT	MODE	TAPE USED	M.EQ.	INPUT SIGNAL	ADJUSTMENT
TP307 F28·AB TERMINAL (Trigger)	PLAY	ALIGNMENT TAPE RF SWEEP	OSCILLOSCOPE	----------	VR315 (Y PB EQ2 R/P1) VR316 (Y PB EQ2 R/P2)

1. SW304 (on W3) : OFF
2. SCOPE CH1 : TP307
   SCOPE CH2 : F28·AB TERMINAL (Trigger)
3. Adjust VR315 and VR316 (CH1 and CH2)
   RF signals For :
   6MHz Level = 100%
   10MHz Level = 65%
4. SW304 (on W3) : ON

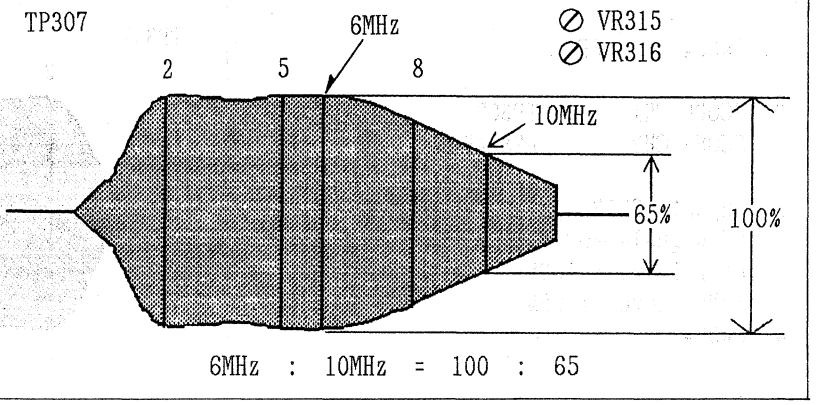

6MHz : 10MHz = 100 : 65

12-3-P. Y PLAYBACK EQ2 ADJUSTMENT (FOR AU-62/AU-65 PAL)

(W3 MOD & DEMOD)

TEST POINT	MODE	TAPE USED	M.EQ.	INPUT SIGNAL	ADJUSTMENT
TP307 F28·AB TERMINAL (Trigger)	PLAY	ALIGNMENT TAPE RF SWEEP	OSCILLOSCOPE	----------	VR315 (Y PB EQ2 R/P1) VR316 (Y PB EQ2 R/P2)

1. SW304 (on W3) : OFF
2. SCOPE CH1 : TP307
   SCOPE CH2 : F28·AB TERMINAL (Trigger)
3. Adjust VR315 and VR316 (CH1 and CH2)
   RF signals For :
   8MHz Level = 100%
   12MHz Level = 40% ± 5%
4. SW304 (on W3) : ON

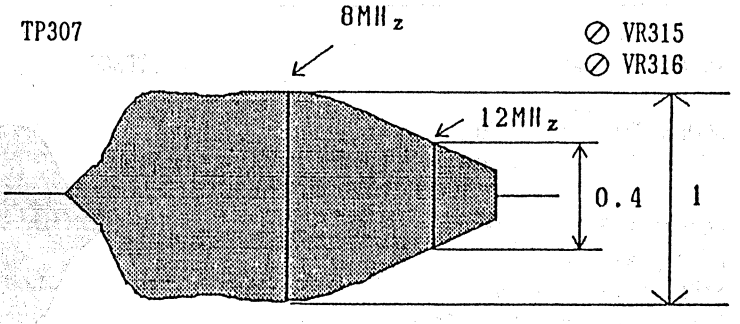

8MHz : 12MHz = 100 : 40 ± 5

12-4-N. Y PLAYBACK EQ2 ADJUSTMENT (FOR AU-63 NTSC)

(W3 MOD & DEMOD)

TEST POINT	MODE	TAPE USED	M.EQ.	INPUT SIGNAL	ADJUSTMENT
TP307 F28·AB EDGE CONNECTOR (Trigger)	PLAY	ALIGNMENT TAPE RF. SWEEP	OSCILLOSCOPE	----------	VR313 (Y PB EQ2 AT1) VR314 (Y PB EQ2 AT2)

1. SW304 : OFF

2. SCOPE CH1 : TP307
   SCOPE CH2 : F28·AB (Trigger)

3. Adjust VR313 and VR314 (CH1 and CH2)
   RF signals For :
   6MHz Level = 100%
   10MHz Level = 65%
4. SW304 : ON

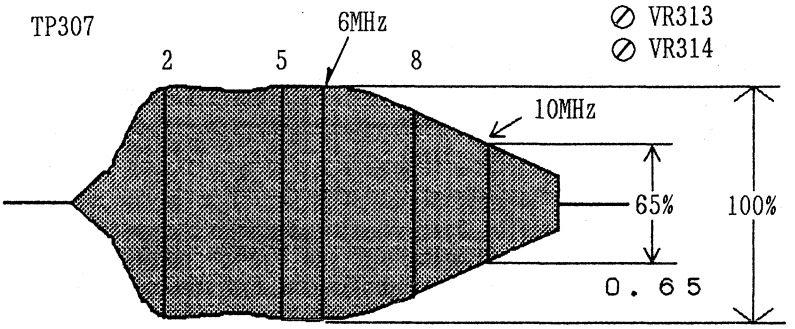

6MHz : 10MHz = 100 : 65

12-4-P. Y PLAYBACK EQ2 ADJUSTMENT (FOR AU-63 PAL)

(W3 MOD & DEMOD)

TEST POINT	MODE	TAPE USED	M.EQ.	INPUT SIGNAL	ADJUSTMENT
TP307 F28·AB EDGE CONNECTOR (Trigger)	PLAY	ALIGNMENT TAPE RF. SWEEP	OSCILLOSCOPE	----------	VR313 (Y PB EQ2 AT1) VR314 (Y PB EQ2 AT2)

1. SW304 : OFF

2. SCOPE CH1 : TP307
   SCOPE CH2 : F28·AB (Trigger)

3. Adjust VR313 and VR314 (CH1 and CH2)
   RF signals For :
   8MHz Level = 100%
   12MHz Level = 40% ± 5%
4. SW304 : ON

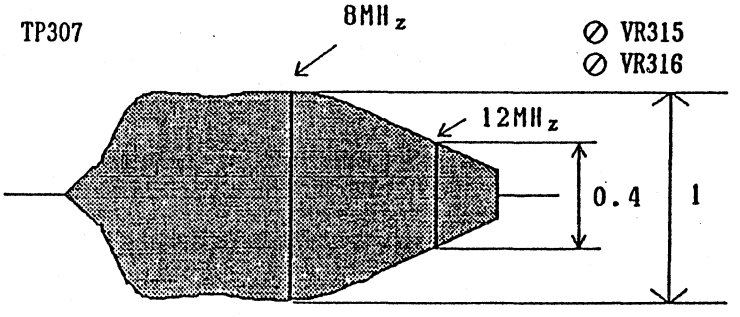

8MHz : 12MHz = 100 : 40 ± 5

12-5-N. Y PLAYBACK FREQUENCY RESPONSE (EQ1) ADJUSTMENT (FINE) (FOR AU-62/AU-63/AU-65 NTSC) (W3 MOD & DEMOD)

TEST POINT	MODE	TAPE USED	M.EQ.	INPUT SIGNAL	ADJUSTMENT
COMPONENT Y OUT F28·AB TERMINAL (Trigger)	PLAY	ALIGNMENT TAPE SWEEP	WAVE FORM MONITOR (TEK 1750)	-------	VR302 (R/P CH2) VR304 (R/P CH1)

1. SW304 : ON

2. SCOPE CH1 : COMPONENT Y OUT
   SCOPE CH2 : F28·AB (Trigger)

3. Adjust VR302 and VR304 so that the frequency response becomes For :
   0.5MHz = 100%
   4.0MHz = 95 ~ 100%

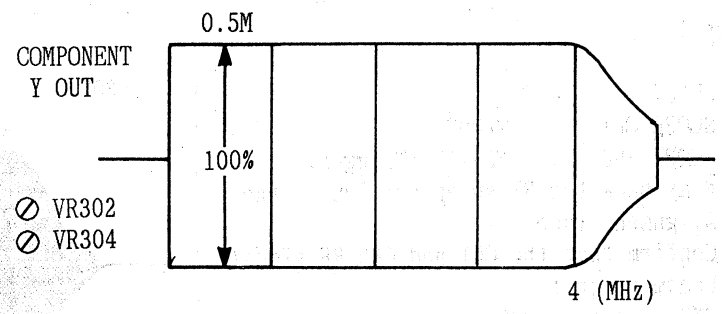

REFERENCE : 0.5MHz = 100%
SPEC : 4MHz = 95 ~ 100%

12-5-P. Y PLAYBACK FREQUENCY RESPONSE (EQ1) ADJUSTMENT (FINE) (FOR AU-62/AU-63/AU-65 PAL) (W3 MOD & DEMOD)

TEST POINT	MODE	TAPE USED	M.EQ.	INPUT SIGNAL	ADJUSTMENT
COMPONENT Y OUT F28·AB TERMINAL (Trigger)	PLAY	ALIGNMENT TAPE SWEEP	WAVE FORM MONITOR (TEK 1751)	-------	VR302 (R/P CH2) VR304 (R/P CH1)

1. SW304 : ON

2. SCOPE CH1 : COMPONENT Y OUT
   SCOPE CH2 : F28·AB (Trigger)

3. Adjust VR302 and VR304 so that the frequency response becomes For :
   0.5MHz = 100%
   5.0MHz = 95% ± 5%

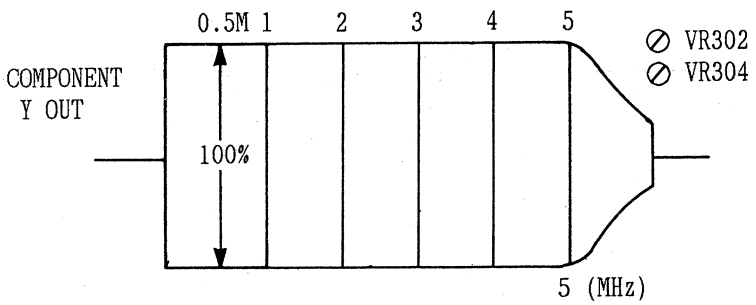

REFERENCE : 0.5MHz = 100%
SPEC : 5MHz = 95 ± 5%

12-6-N. Y PLAYBACK EQ2·EQ1 CONFIRMATION (FOR AU-65/63/62 NTSC)

(W3 MOD & DEMOD)

TEST POINT	MODE	TAPE USED	M.EQ.	INPUT SIGNAL	ADJUSTMENT
TP307 COMPONENT Y OUT F28·AB TERMINAL (Trigger)	PLAY	ALIGNMENT TAPE RF SWEEP & VIDEO SWEEP	WAVE FORM MONITOR (TEK OR 1750) OSCILLOSCOPE	-------	----------

Step 1.

1. SW304 : OFF
2. SCOPE CH1 : TP307
   SCOPE CH2 : F28·AB (Trigger)
3. Play back the RF sweep portion of the Alignment Tape.
4. Confirm that the CH1 and CH2 RF signals becomes For :
   6MHz Level = 100%
   10MHz Level = 65%
5. If it is not, readjust VR315/316 (AU-65/62), VR313/314 (AU-63).
6. SW304 : ON

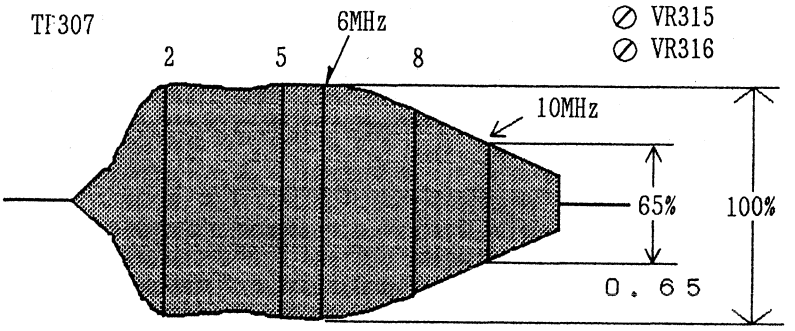

6MHz : 10MHz = 100 : 65

Step 2.

1. SW304 : ON
2. SCOPE CH1 : COMPONENT Y OUT
   SCOPE CH2 : F28·AB (Trigger)
3. Play back the Sweep portion of the Alignment Tape.
4. Comfirm that the frequency response becomes For :
   0.5MHz = 100%
   4MHz = 95 ~ 100%
5. If it is not, readjust VR302 and VR304.

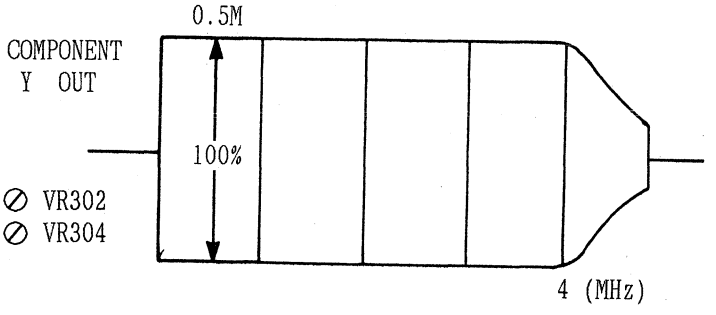

REFIRENCE : 0.5MHz = 100%
SPEC : 4MHz = 95 ~ 100%

12-6-P. Y PLAYBACK EQ2·EQ1 CONFIRMATION (FOR AU-65/63/62 PAL)

(W3 MOD & DEMOD)

TEST POINT	MODE	TAPE USED	M.EQ.	INPUT SIGNAL	ADJUSTMENT
TP307 COMPONENT Y OUT F28·AB TERMINAL (Trigger)	PLAY	ALIGNMENT TAPE RF SWEEP & VIDEO SWEEP	WAVE FORM MONITOR (TEK1751) OR OSCILLOSCOPE	-------	----------

Step 1.

1. SW304 : OFF
2. SCOPE CH1 : TP307
   SCOPE CH2 : F28·AB (Trigger)
3. Play back the RF sweep portion of the Alignment Tape.
4. Confirm that the CH1 and CH2 RF signals becomes For :
   8MHz Level = 100%
   12MHz Level = 40%
5. If it is not, readjust VR315/316 (AU-65/62), VR313/314 (AU-63).
6. SW304 : ON

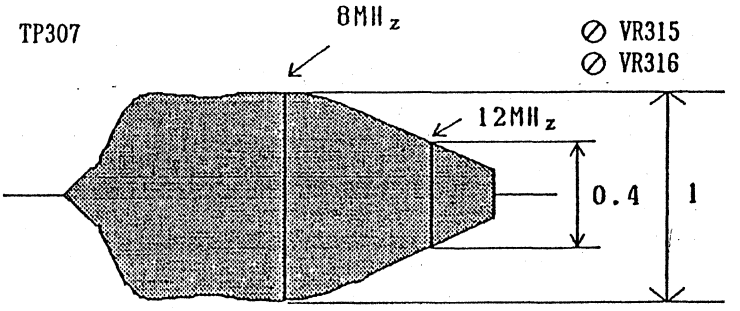

8MHz : 12MHz = 100 : 40

Step 2.

1. SW304 : ON
2. SCOPE CH1 : COMPONENT Y OUT
   SCOPE CH2 : F28·AB (Trigger)
3. Play back the Sweep portion of the Alignment Tape.
4. Confirm that the frequency response becomes For :
   0.5MHz = 100%
   5MHz = 95% ± 5%
5. If it is not, readjust VR302 and VR304.

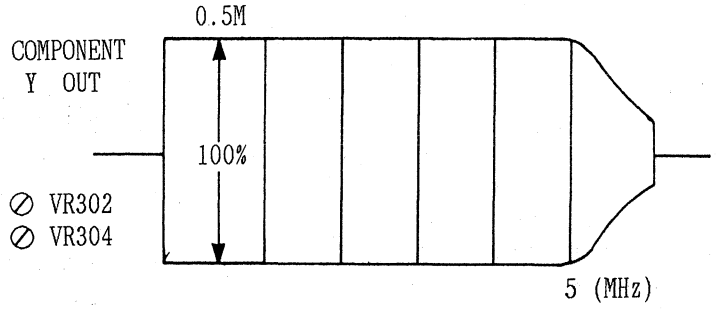

REFIRENCE : 0.5MHz = 100%
SPEC : 5MHz = 95 ± 5%

12-7-N. Y CH1 RECORDING CURRENT ADJUSTMENT (FOR AU-65 NTSC)

(RA / HA BOARD)

TEST POINT	MODE	TAPE USED	M.EQ.	INPUT SIGNAL	ADJUSTMENT
TP3 (on RA/HA) TP201 (on RA/HA) F28·AB (on W3) (Trigger)	SELF REC/PLAY	BLANK TAPE	OSCILLOSCOPE	COMPONENT 50% WHITE	VC1 (Y CH1 REC EQ) (on RA/HA BOARD) VR3 (Y CH1 CURR) (on RA/HA BOARD)

Step 1.

1. VR3 : CENTER
2. Place the unit in the recording mode.
3. SCOPE CH1 : TP3 (on RA/HA)
   SCOPE CH2 : F28·AB (Trigger) (on W3)
4. During the recording mode, turn VC1 and measure the maximum level and minimum level.
5. Adjust VC1 for the carrier level becomes middle level as shown.

TP3
⊘ VC1

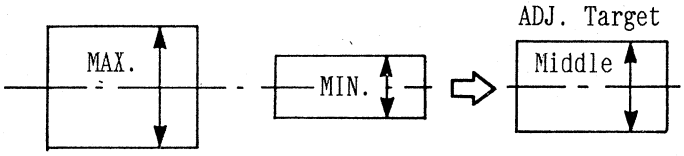

Step 2.

1. SCOPE CH1 : TP3 (on RA/HA)
   SCOPE CH2 : F28·AB (Trigger) (W3)
2. Place the unit in the recording mode.
3. Turn VR3 so that the FM Carrier level of 50% White portion becomes 640mVp-p, 800mVp-p and 960mVp-p record about 10 sec. for each level.
4. SCOPE : TP201 (on RA/HA)
5. Play back the just recorded portion.
6. Find the maximum playback level.
7. Set VR3 to maximum playback level point (640mVp-p, 800mVp-p or 960mVp-p) at TP3.

Note:
If the playback maximum level is all the same level (±1.5%), set VR3 to lower playback level point. (640mVp-p or 800mVp-p)

TP3
⊘ VR3

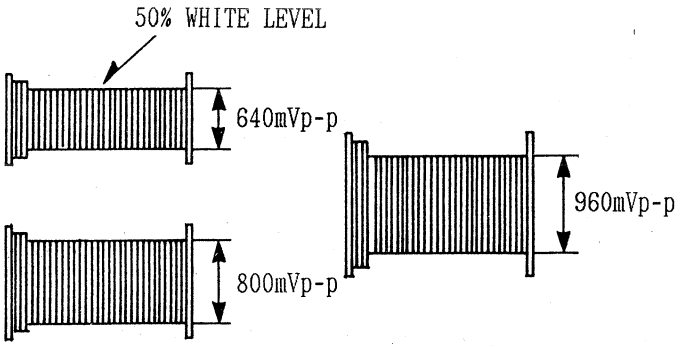

Note:
This is because AU-65 doesn't have a Confidence PB Head.

12-7-P. Y CH1 RECORDING CURRENT ADJUSTMENT (FOR AU-65 PAL)

(RA / HA BOARD)

TEST POINT	MODE	TAPE USED	M.EQ.	INPUT SIGNAL	ADJUSTMENT
TP3 (on RA/HA) TP201 (on RA/HA) F28·AB (on W3) (Trigger)	SELF REC/PLAY	BLANK TAPE	OSCILLOSCOPE	COMPONENT 50% WHITE	VC1 (Y CH1 REC EQ) (on RA/HA BOARD) VR3 (Y CH1 CURR) (on RA/HA BOARD)

Step 1.

1. VR3 : CENTER
2. Place the unit in the recording mode.
3. SCOPE CH1 : TP3 (on RA/HA)
   SCOPE CH2 : F28·AB (Trigger) (on W3)
4. During the recording mode, turn VC1 and measure the maximum level and minimum level.
5. Adjust VC1 for the carrier level becomes middle level as shown.

TP3
⊘ VC1

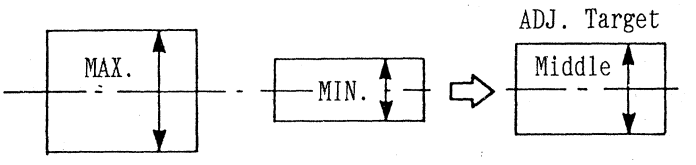

Step 2.

1. SCOPE CH1 : TP3 (on RA/HA)
   SCOPE CH2 : F28·AB (Trigger) (W3)
2. Place the unit in the recording mode.
3. Turn VR3 so that the FM Carrier level of 50% White portion becomes 630mVp-p, 780mVp-p and 940mVp-p record about 10 sec. for each level.
4. SCOPE : TP201 (on RA/HA)
5. Play back the just recorded portion.
6. Find the maximum playback level.
7. Set VR3 to maximum playback level point (630mVp-p, 780mVp-p or 940mVp-p) at TP3.

Note:
If the playback maximum level is all the same level (±1.5%), set VR3 to lower playback level point. (630mVp-p or 780mVp-p)

TP3
⊘ VR3

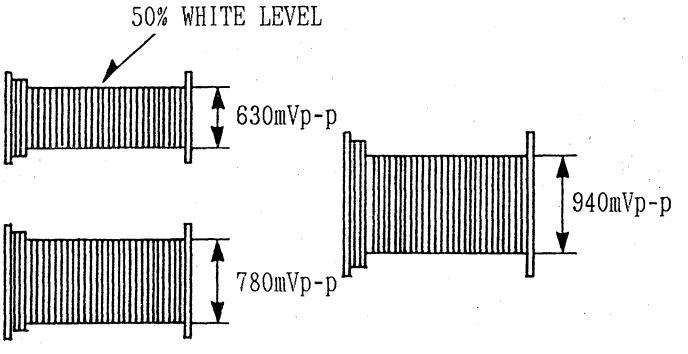

Note:
This is because AU-65 doesn't have a Confidence PB Head.

12-8-N. Y CH2 RECORDING CURRENT ADJUSTMENT (FOR AU-65 NTSC)

(RA / HA BOARD)

TEST POINT	MODE	TAPE USED	M.EQ.	INPUT SIGNAL	ADJUSTMENT
TP4 (on RA/HA) TP202 (on RA/HA) F33·AB (on W3) (Trigger)	SELF REC/PLAY	BLANK TAPE	OSCILLOSCOPE	COMPONENT 50% WHITE	VC2 (Y CH2 REC EQ) (on RA/HA BOARD) VR4 (Y CH2 CURR) (on RA/HA BOARD)

Step 1.

1. VR4 : CENTER
2. Place the unit in the recording mode.
3. SCOPE CH1 : TP4 (on RA/HA)
   SCOPE CH2 : F33·AB (Trigger) (on W3)
4. During the recording mode, turn VC2 and measure the maximum level and minimum level.
5. Adjust VC2 for the carrier level becomes middle level as shown.

TP4
⊘ VC2

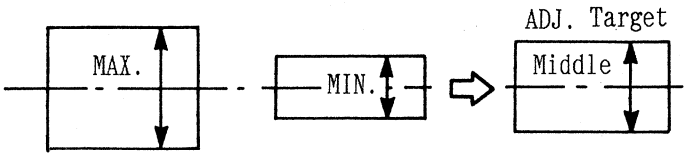

Step 2.

1. SCOPE CH1 : TP4 (on RA/HA)
   SCOPE CH2 : F33·AB (Trigger) (on W3)
2. Place the unit in the recording mode.
3. Turn VR4 so that the FM Carrier level of 50% White portion becomes 640mVp-p, 800mVp-p and 960mVp-p record about 10 sec. for each level.
4. SCOPE : TP202 (on RA/HA)
5. Play back the just recorded portion.
6. Find the maximum playback level.
7. Set VR4 to maximum playback level point (640mVp-p, 800mVp-p or 960mVp-p) at TP3.

Note:
If the playback maximum level is all the same level (±1.5%), set VR4 to lower playback level point. (640mVp-p or 800mVp-p)

TP4
⊘ VR4

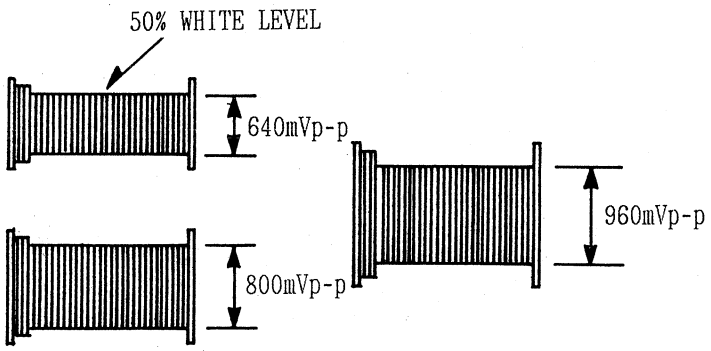

Note:
This is because AU-65 doesn't have a Confidence PB Head.

12-8-P. Y CH2 RECORDING CURRENT ADJUSTMENT (FOR AU-65 PAL)

(RA / HA BOARD)

TEST POINT	MODE	TAPE USED	M.EQ.	INPUT SIGNAL	ADJUSTMENT
TP4 (on RA/HA) TP202 (on RA/HA) F33·AB (on W3) (Trigger)	SELF REC/PLAY	BLANK TAPE	OSCILLOSCOPE	COMPONENT 50% WHITE	VC2 (Y CH2 REC EQ) (on RA/HA BOARD) VR4 (Y CH2 CURR) (on RA/HA BOARD)

Step 1.

1. VR4 : CENTER
2. Place the unit in the recording mode.
3. SCOPE CH1 : TP4 (on RA/HA)
   SCOPE CH2 : F33·AB (Trigger) (on W3)
4. During the recording mode, turn VC2 and measure the maximum level and minimum level.
5. Adjust VC2 for the carrier level becomes middle level as shown.

TP4
⊘ VC2

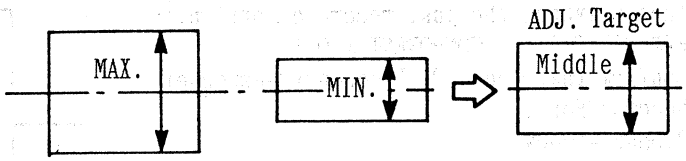

Step 2.

1. SCOPE CH1 : TP4 (on RA/HA)
   SCOPE CH2 : F33·AB (Trigger) (on W3)
2. Place the unit in the recording mode.
3. Turn VR4 so that the FM Carrier level of 50% White portion becomes 630mVp-p, 780mVp-p and 940mVp-p record about 10 sec. for each level.
4. SCOPE : TP202 (on RA/HA)
5. Play back the just recorded portion.
6. Find the maximum playback level.
7. Set VR4 to maximum playback level point (630mVp-p, 780mVp-p or 940mVp-p) at TP3.

Note:
If the playback maximum level is all the same level (±1.5%), set VR4 to lower playback level point. (630mVp-p or 780mVp-p)

TP4
⊘ VR4

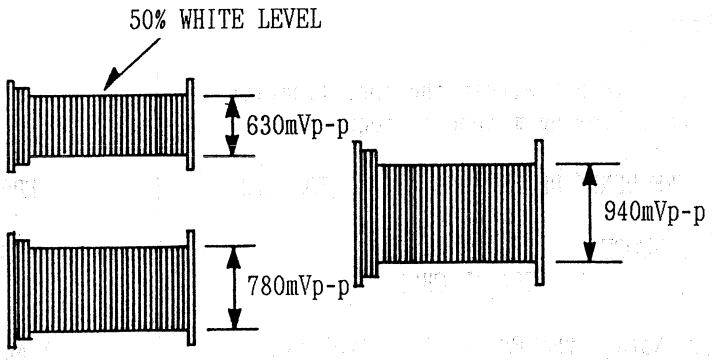

Note:
This is because AU-65 doesn't have a Confidence PB Head.

12-9-N. Y SELF RECORDING PLAYBACK FREQUENCY RESPONSE ADJUSTMENT (FOR AU-65 NTSC)

(RA / HA BOARD)

TEST POINT	MODE	TAPE USED	M.EQ.	INPUT SIGNAL	ADJUSTMENT
COMPONENT Y OUT TP3(CH1) (on RA/HA) TP4(CH2) (on RA/HA)	SELF REC/PLAY	BLANK TAPE	OSCILLOSCOPE WAVEFORM MONITOR	COMPONENT 60% H. SWEEP	VC1, VR3 (CH1) (on RA/HA BOARD) VC2, VR4 (CH2) (on RA/HA BOARD)

Step 1.

1. Make a recording.
2. Then playback the just recorded portion.
3. WFM MONITOR : COMPONENT Y OUT
4. Confirm that the Y PB Frequency Response becomes For :
   0.5MHz = 100%
   4MHz = 95% ± 5%

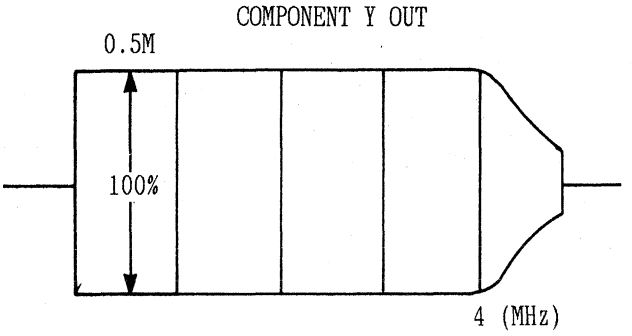

REF : 0.5MHz - 100%
SPEC : 4MHz = 90 ~ 95%

Step 2.

If it is not within the specification, the following method is required.

FREQUENCY RESPONSE LEVEL IS TOO HIGH.

1) SCOPE : TP3 (Y CH1)
   TP4 (Y CH2)
2) Notate the FM Carrier Level at TP3 (CH1) and TP4 (CH2) on RA/HA.
3) Turn VC1 (CH1) and VC2 (CH2) slightly to increase the FM Carrier Level at TP3 (CH1) and TP4 (CH2).
4) Adjust VR3 (CH1) and VR4 (CH2) so that the FM Carrier Level matches the notated FM Carrier Level in item 2.

FREQUENCY RESPONSE IS COMPRESSED.

1) SCOPE : TP3 (Y CH1)
   TP4 (Y CH2)
2) Notate the FM Carrier Level at TP3 (CH1) and TP4 (CH2) on RA/HA.
3) Turn VC1 (CH1) and VC2 (CH2) slightly to decrease the FM Carrier Level at TP3 (CH1) and TP4 (CH2).
4) Adjust VR3 (CH1) and VR4 (CH2) so that the FM Carrier Level matches notated FM Carrier Level in item 2.

Step 3.

1. Finally confirm the Y Self Rec Frequency Response (Step1).

12-9-P. Y SELF RECORDING PLAYBACK FREQUENCY RESPONSE ADJUSTMENT (FOR AU-65 PAL)

(RA / HA BOARD)

TEST POINT	MODE	TAPE USED	M.EQ.	INPUT SIGNAL	ADJUSTMENT
COMPONENT Y OUT TP3 (on RA/HA) TP4 (on RA/HA)	SELF REC/PLAY	BLANK TAPE	OSCILLOSCOPE WAVEFORM MONITOR	COMPONENT 60% H. SWEEP	VC1, VR3 (CH1) (on RA/HA BOARD) VC2, VR4 (CH2) (on RA/HA BOARD)

Step 1.

1. Make a recording.
2. Then playback the just recorded portion.
3. WFM MONITOR : COMPONENT Y OUT
4. Confirm that the Y PB Frequency Response becomes For :
   0.5MHz = 100%
   5MHz = 95% ± 5%

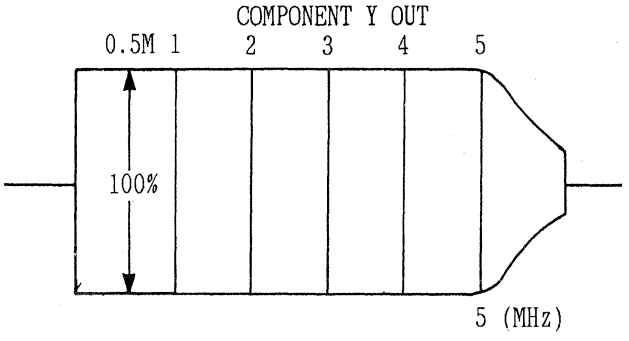

REF : 0.5MHz = 100%
SPEC : 5MHz = 95% ± 5%

Step 2.

If it is not within the specification, the following method is required.

FREQUENCY RESPONSE LEVEL IS TOO HIGH.

1) SCOPE : TP3 (Y CH1)
TP4 (Y CH2)

2) Notate the FM Carrier Level at TP3 (CH1) and TP4 (CH2) on RA/HA.

3) Turn VC1 (CH1) and VC2 (CH2) slightly to increase the FM Carrier Level at TP3 (CH1) and TP4 (CH2).
4) Adjust VR3 (CH1) and VR4 (CH2) so that the FM Carrier Level matches the notated FM Carrier Level in item 2.

FREQUENCY RESPONSE IS COMPRESSED.

1) SCOPE : TP3 (Y CH1)
TP4 (Y CH2)

2) Notate the FM Carrier Level at TP3 (CH1) and TP4 (CH2) on RA/HA.

3) Turn VC1 (CH1) and VC2 (CH2) slightly to decrease the FM Carrier Level at TP3 (CH1) and TP4 (CH2).
4) Adjust VR3 (CH1) and VR4 (CH2) so that the FM Carrier Level matches notated FM Carrier Level in item 2.

Step 3.

1. Finally confirm the Y Self Rec Frequency Response (Step1).

12-10-N. Y HF LINEARITY ADJUSTMENT (1) (FOR AU-65/63/62 NTSC)

(W3 MOD & DEMOD)

TEST POINT	MODE	TAPE USED	M.EQ.	INPUT SIGNAL	ADJUSTMENT
COMPONENT Y OUT	PLAY	ALIGNMENT TAPE 80IRE RAMP SIGNAL	WFM/VECTOR MONITOR (TEK 1750)	----------	VR310 (EQ4)

Step 1.
WFM MONITOR CONDITION

1. MODE : WFM mode
2. FILTER : CHROMA

Step 2.

1. WFM MONITOR : COMPONENT Y OUT
2. Adjust VR310 so that the HF linearity becomes for :
   A = 100% B = 100 ± 10%
3. Confirm the Y PLAYBACK FREQUENCY RESPONSE (EQ1) ADJUSTMENT (FINE) (12-5-N).
4. If it is not, readjust Section 12-5-N and 12-10-N.

COMPONENT Y OUT ⊘ VR310

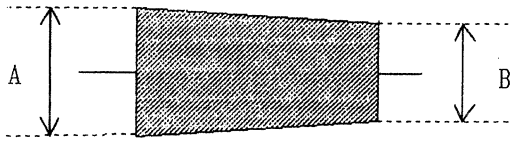

A : B = 100 : 100 ± 10

12-10-P. Y HF LINEARITY ADJUSTMENT (1) (FOR AU-65/63/62 PAL)

(W3 MOD & DEMOD)

TEST POINT	MODE	TAPE USED	M.EQ.	INPUT SIGNAL	ADJUSTMENT
COMPONENT Y OUT	PLAY	ALIGNMENT TAPE RAMP SIGNAL	WFM/VECTOR MONITOR (TEK 1751)	----------	VR310 (EQ4)

Step 1.
WFM MONITOR CONDITION

1. MODE : WFM mode
2. FILTER : CHROMA

Step 2.

1. WFM MONITOR : COMPONENT Y OUT
2. Adjust VR310 so that the HF linearity becomes for :
   A = 100% B = 100 ± 10%
3. Confirm the Y PLAYBACK FREQUENCY RESPONSE (EQ1) ADJUSTMENT (FINE) (12-5-P).
4. If it is not, readjust Section 12-5-P and 12-10-P.

COMPONENT Y OUT ⊘ VR310

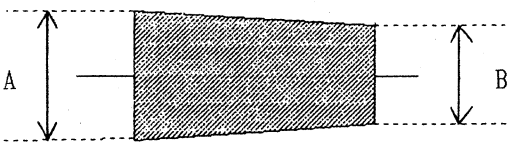

A : B = 100 : 100 ± 10

12-11. C PLAYBACK FREQUENCY RESPONSE ADJUSTMENT (FINE) (FOR AU-65/AU-62 NTSC & PAL)

(W3 MOD & DEMOD)

TEST POINT	MODE	TAPE USED	M.EQ.	INPUT SIGNAL	ADJUSTMENT
COMPONENT Pr/Pb OUT F33·AB (Trigger)	PLAY	ALIGNMENT TAPE SWEEP	WAVEFORM MONITOR OR OSCILLOSCOPE	-------	VR712 (R/P 1) VR713 (R/P 2)

1. SCOPE CH1 : COMPONENT Pr/Pb OUT
   SCOPE CH2 : F33·AB (Trigger)
2. Adjust VR712 and VR713 so that the frequency response becomes for :
   0.25MHz = 100%
   1.5MHz = 95% ± 5%

COMPONENT Pr/Pb OUT

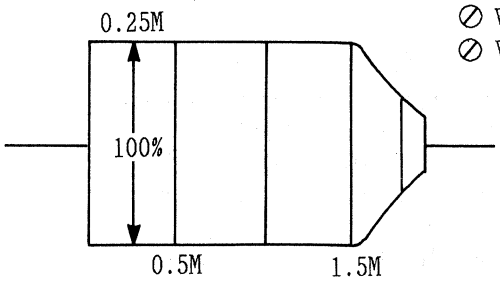

REF : 0.25MHz = 100%
SPEC : 1.5MHz = 95% ± 5%

12-12. C PLAYBACK FREQUENCY RESPONSE ADJUSTMENT (FINE) (FOR AU-63 NTSC & PAL)

(W3 MOD & DEMOD)

TEST POINT	MODE	TAPE USED	M.EQ.	INPUT SIGNAL	ADJUSTMENT
COMPONENT Pr/Pb OUT F33·AB (Trigger)	PLAY	ALIGNMENT TAPE SWEEP	WAVEFORM MONITOR (TEK 1750)	-------	VR710 (AT1) VR711 (AT1)

1. SCOPE CH1 : COMPONENT Pr/Pb OUT
   SCOPE CH2 : F33·AB (Trigger)
2. Adjust VR710 and VR711 so that the frequency response becomes for :
   0.25MHz = 100%
   1.5MHz = 95% ± 5%

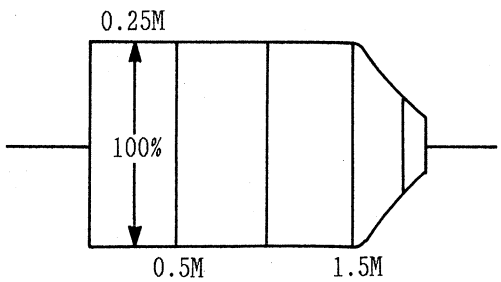

REF : 0.25MHz =100%
SPEC : 1.5MHz = 95% ± 5%

12-13-N.C CH1 RECORDING CURRENT ADJUSTMENT (FOR AU-65 NTSC)

(RA / HA BOARD)

TEST POINT	MODE	TAPE USED	M.EQ.	INPUT SIGNAL	ADJUSTMENT
TP5 (on RA/HA) TP203 (on RA/HA)	SELF REC/PLAY	BLANK TAPE	OSCILLOSCOPE	COMPONENT 50% WHITE	VC3 (C CH1 REC EQ) (on RA/HA BOARD) VR5 (C CH1 CURR) (on RA/HA BOARD)

Step 1.

1. VR5 : CENTER
2. Place the unit in the recording mode.
3. SCOPE : TP5 (on RA/HA)
4. During the recording mode, turn VC3 and measure the maximum level and minimum level.
5. Adjust VC3 for the carrier level becomes middle level as shown.

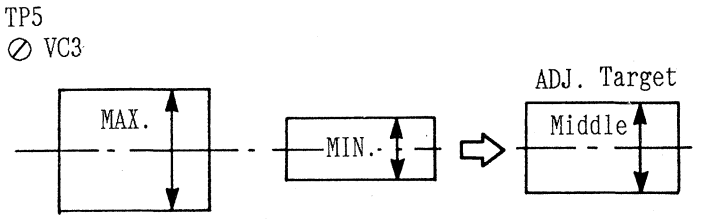

Step 2.

1. SCOPE : TP5 (on RA/HA)
2. Place the unit in the recording mode.
3. Turn VR5 so that the FM Carrier A level becomes 640mVp-p, 800mVp-p and 960mVp-p record about 10 sec. for each level.
4. SCOPE : TP203 (on RA/HA)
5. Play back the just recorded portion.
6. Find the maximum playback level.
7. Set VR5 to maximum playback level point (640mVp-p, 800mVp-p or 960mVp-p) at TP5.

Note:
If the playback maximum level is all the same level (±1.5%), set VR5 to lower playback level point.

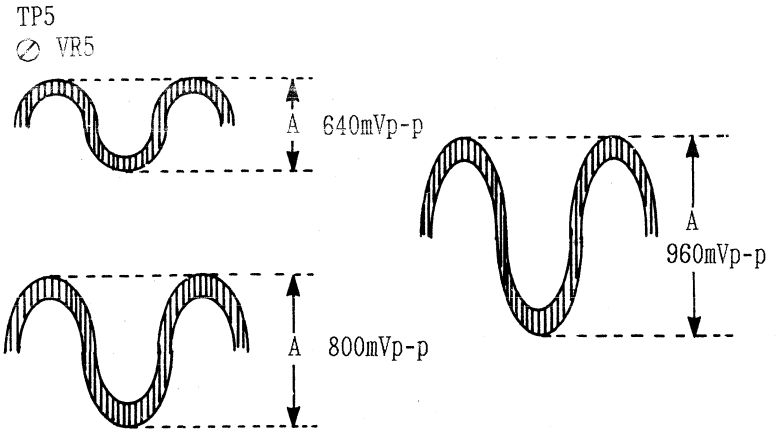

Note : This is because AU-65 doesn't have a Confidence PB Head.

12-13-P. C CH1 RECORDING CURRENT ADJUSTMENT (FOR AU-65 PAL)

(RA / HA BOARD)

TEST POINT	MODE	TAPE USED	M.EQ.	INPUT SIGNAL	ADJUSTMENT
TP5 (on RA/HA) TP203 (on RA/HA)	SELF REC/PLAY	BLANK TAPE	OSCILLOSCOPE	COMPONENT 50% WHITE	VC3 (C CH1 REC EQ) (on RA/HA BOARD) VR5 (C CH1 CURR) (on RA/HA BOARD)

Step 1.

1. VR5 : CENTER
2. Place the unit in the recording mode.
3. SCOPE : TP5 (on RA/HA)
4. During the recording mode, turn VC3 and measure the maximum level and minimum level.
5. Adjust VC3 for the carrier level becomes middle level as shown.

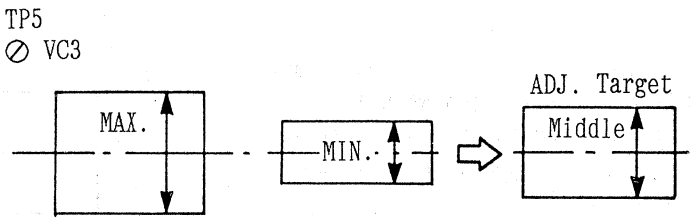

Step 2.

1. SCOPE : TP5 (on RA/HA)
2. Place the unit in the recording mode.
3. Turn VR5 so that the FM Carrier A level becomes 530mVp-p, 660mVp-p and 800mVp-p record about 10 sec. for each level.
4. SCOPE : TP203 (on RA/HA)
5. Play back the just recorded portion.
6. Find the maximum playback level.
7. Set VR5 to maximum playback level point (530mVp-p, 660mVp-p or 800mVp-p) at TP5.

Note:
If the playback maximum level is all the same level (±1.5%), set VR5 to lower playback level point.

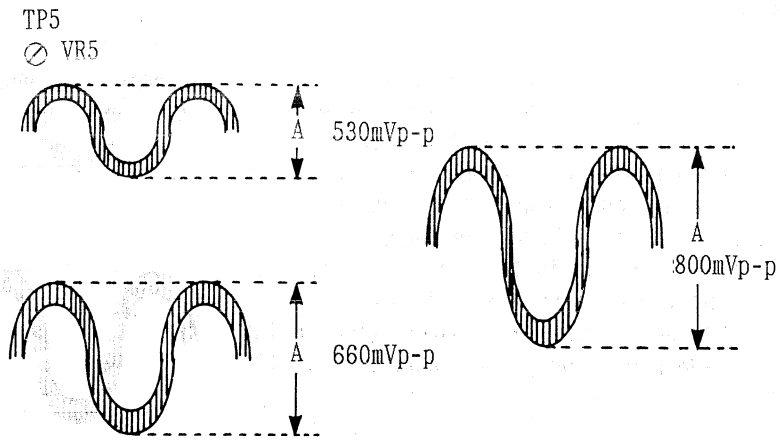

Note : This is because AU-65 doesn't have a Confidence PB Head.

12-14-N. C CH2 RECORDING CURRENT ADJUSTMENT (FOR AU-65 NTSC)

(RA / HA BOARD)

TEST POINT	MODE	TAPE USED	M.EQ.	INPUT SIGNAL	ADJUSTMENT
TP6 (on RA/HA) TP204 (on RA/HA)	SELF REC/PLAY	BLANK TAPE	OSCILLOSCOPE	COMPONENT 50% WHITE	VC4 (C CH2 REC EQ) (on RA/HA BOARD) VR6 (C CH2 CURR) (on RA/HA BOARD)

Step 1.

1. VR6 : CENTER
2. Place the unit in the recording mode.
3. SCOPE : TP6 (on RA/HA)
4. During the recording mode, turn VC4 and measure the maximum level and minimum level.
5. Adjust VC4 for the carrier level becomes middle level as shown in figure.

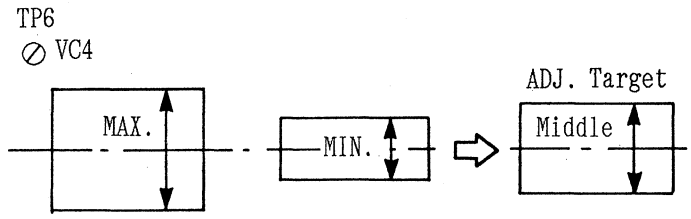

Step 2.

1. SCOPE : TP6 (on RA/HA)
2. Place the unit in the recording mode.
3. Turn VR6 so that the FM Carrier A level becomes 640mVp-p, 800mVp-p and 960mVp-p record about 10 sec. for each level.
4. SCOPE : TP204 (on RA/HA)
5. Play back the just recorded portion.
6. Find the maximum playback level.
7. Set VR6 to maximum playback level point (640mVp-p, 800mVp-p or 960mVp-p) at TP6.

Note:
If the playback maximum level is all the same level (±1.5%), set VR6 to lower playback level point.

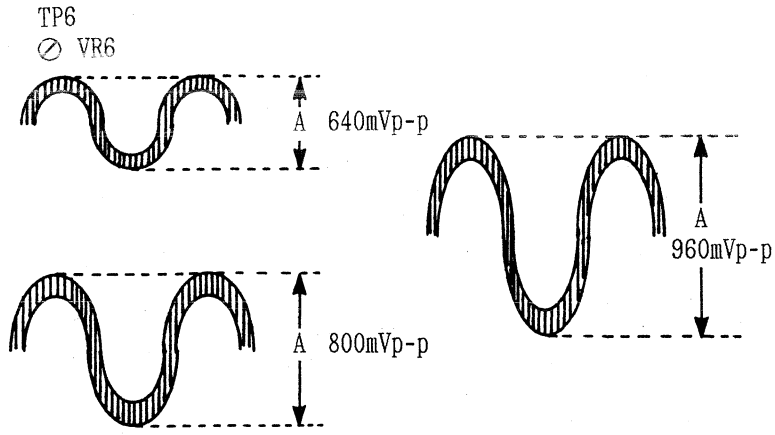

Note : This is because AU-65 doesn't have a Confidence PB Head.

12-14-P. C CH2 RECORDING CURRENT ADJUSTMENT (FOR AU-65 PAL)

(RA / HA BOARD)

TEST POINT	MODE	TAPE USED	M.EQ.	INPUT SIGNAL	ADJUSTMENT
TP6 (on RA/HA) TP204 (on RA/HA)	SELF REC/PLAY	BLANK TAPE	OSCILLOSCOPE	COMPONENT 50% WHITE	VC4 (C CH2 REC EQ) (on RA/HA BOARD) VR6 (C CH2 CURR) (on RA/HA BOARD)

Step 1.

1. VR6 : CENTER
2. Place the unit in the recording mode.
3. SCOPE : TP6 (on RA/HA)
4. During the recording mode, turn VC4 and measure the maximum level and minimum level.
5. Adjust VC4 for the carrier level becomes middle level as shown in figure.

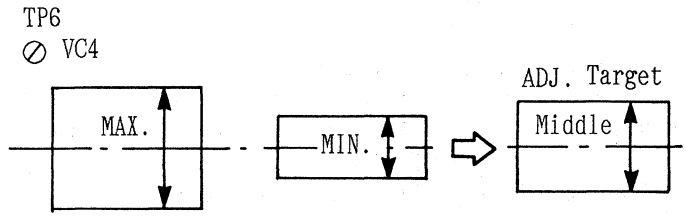

Step 2.

1. SCOPE : TP6 (on RA/HA)
2. Place the unit in the recording mode.
3. Turn VR6 so that the FM Carrier A level becomes 530mVp-p, 660mVp-p and 800mVp-p record about 10 sec. for each level.
4. SCOPE : TP204 (on RA/HA)
5. Play back the just recorded portion.
6. Find the maximum playback level.
7. Set VR6 to maximum playback level point (530mVp-p, 660mVp-p or 800mVp-p) at TP6.

Note:
If the playback maximum level is all the same level (±1.5%), set VR6 to lower playback level point.

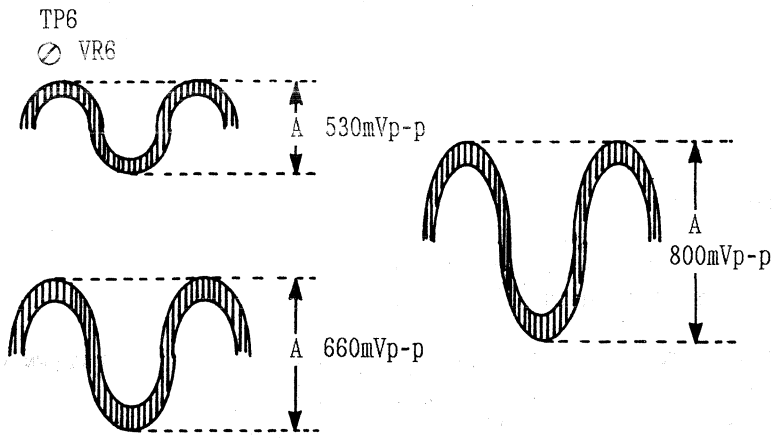

Note : This is because AU-65 doesn't have a Confidence PB Head.

12-15-N. C SELF RECORDING PLAYBACK FREQUENCY RESPONSE ADJUSTMENT (FOR AU-65 NTSC)

(RA / HA BOARD)

TEST POINT	MODE	TAPE USED	M.EQ.	INPUT SIGNAL	ADJUSTMENT
COMPONENT Pr/Pb OUT TP5 (on RA/HA) TP6 (on RA/HA)	SELF REC/PLAY	BLANK	OSCILLOSCOPE WAVEFORM MONITOR	COMPONENT 60% H. SWEEP	VC3, VR5 (CH1) (on RA/HA BOARD) VC4, VR6 (CH2) (on RA/HA BOARD)

Step 1.

1. Make a recording for a few minutes.
2. Then playback the just recorded portion.
3. WFM MONITOR : COMPONENT Pr OUT
   COMPONENT Pb OUT
4. Confirm that the C PB Frequency Response becomes for :
   0.25MHz = 100%
   1.5MHz = 80% ± 5%

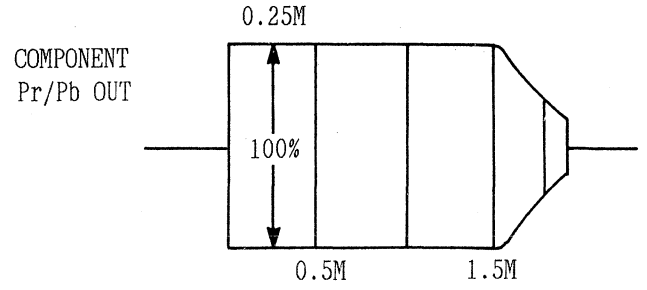

REF : 0.25MHz = 100%
SPEC : 1.5MHz = 80% ± 5%

Step 2.

If it is not within the specification, the following method is required.

* FREQUENCY RESPONSE LEVEL IS TOO HIGH AT 1.5MHz PORTION.

1) SCOPE : TP5 (C CH1)
   TP6 (C CH2)

2) Notate the FM Carrier Level at TP5 (CH1) and TP6 (CH2).

3) Turn VC3 (CH1) and VC4 (CH2) slightly to increase the FM Carrier Level at TP5 (CH1) and TP6 (CH2).
4) Adjust VR5 (CH1) and VR6 (CH2) so that the FM Carrier Level matches the notated FM Carrier Level in item 2.

* FREQUENCY RESPONSE IS COMPRESSED AT 1.5MHz PORTION.

1) SCOPE : TP5 (C CH1)
   TP6 (C CH2)

2) Notate the FM Carrier Level at TP5 (CH1) and TP6 (CH2).

3) Turn VC3 (CH1) and VC4 (CH2) slightly to decrease the FM Carrier Level at TP5 (CH1) and TP6 (CH2).
4) Adjust VR5 (CH1) and VR6 (CH2) so that the FM Carrier Level matches the notated FM Carrier Level in item 2.

12-15-P. C SELF RECORDING PLAYBACK FREQUENCY RESPONSE ADJUSTMENT (FOR AU-65 PAL)

(RA / HA BOARD)

TEST POINT	MODE	TAPE USED	M.EQ.	INPUT SIGNAL	ADJUSTMENT
COMPONENT Pr/Pb OUT TP5 (on RA/HA) TP6 (on RA/HA)	SELF REC/PLAY	BLANK	OSCILLOSCOPE WAVEFORM MONITOR	COMPONENT 60% H. SWEEP	VC3, VR5 (CH1) (on RA/HA BOARD) VC4, VR6 (CH2) (on RA/HA BOARD)

Step 1.

1. Make a recording for a few minutes.
2. Then playback the just recorded portion.
3. WFM MONITOR : COMPONENT Pr OUT
   COMPONENT Pb OUT
4. Confirm that the C PB Frequency Response becomes for :
   0.25MHz = 100%
   1.5MHz = 95% ± 5%

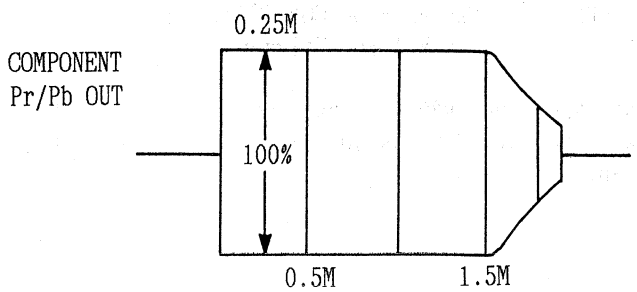

REF : 0.25MHz = 100%
SPEC : 1.5MHz = 95% ± 5%

Step 2.

If it is not within the specification, the following method is required.

* FREQUENCY RESPONSE LEVEL IS TOO HIGH AT 1.5MHz PORTION.

1) SCOPE : TP5 (C CH1)
   TP6 (C CH2)

2) Notate the FM Carrier Level at TP5 (CH1) and TP6 (CH2).

3) Turn VC3 (CH1) and VC4 (CH2) slightly to increase the FM Carrier Level at TP5 (CH1) and TP6 (CH2).
4) Adjust VR5 (CH1) and VR6 (CH2) so that the FM Carrier Level matches the notated FM Carrier Level in item 2.

* FREQUENCY RESPONSE IS COMPRESSED AT 1.5MHz PORTION.

1) SCOPE : TP5 (C CH1)
   TP6 (C CH2)

2) Notate the FM Carrier Level at TP5 (CH1) and TP6 (CH2).

3) Turn VC3 (CH1) and VC4 (CH2) slightly to decrease the FM Carrier Level at TP5 (CH1) and TP6 (CH2).
4) Adjust VR5 (CH1) and VR6 (CH2) so that the FM Carrier Level matches the notated FM Carrier Level in item 2.

12-16. Y PLAYBACK FM CARRIER LEVEL READJUSTMENT (FOR AU-65/AU-63/AU-62 NTSC & PAL) (W3: MOD & DEMOD)

TEST POINT	MODE	TAPE USED	M.EQ.	INPUT SIGNAL	ADJUSTMENT
TP301 F29·AB (Trigger)	PLAY	ALIGNMENT TAPE COLOR BAR	OSCILLOSCOPE	-------	VR301 <R/P (AT) CH2 LEV> VR303 <R/P (AT) CH1 LEV>

1. SCOPE CH1 : TP301
   SCOPE CH2 : F29·AB EDGE CONNECTOR (on W3) For Trigger

2. Adjust VR301 and VR303 so that the signal level at TP301 is 400 ± 20mVp-p.

TP301

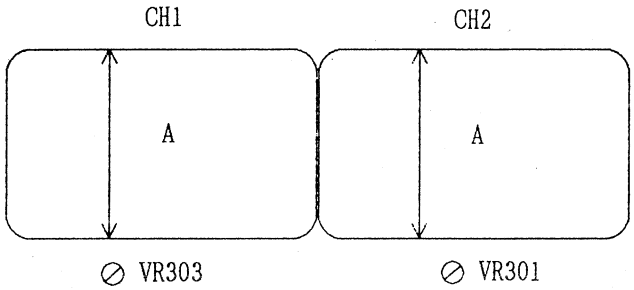

A = 400 ± 50mVp-p

12-17. C PLAYBACK FM CARRIER LEVEL READJUSTMENT (FOR AU-65/AU-63/AU-62 NTSC & PAL) (W3: MOD & DEMOD)

TEST POINT	MODE	TAPE USED	M.EQ.	INPUT SIGNAL	ADJUSTMENT
TP701 F33·AB (Trigger)	PLAY	ALIGNMENT TAPE COLOR BAR	OSCILLOSCOPE	-------	VR701 (R/P CH2 LEV) VR702 (R/P CH1 LEV)

1. SCOPE CH1 : TP701
   SCOPE CH2 : F33·AB EDGE CONNECTOR (on W3) For Trigger

2. Adjust VR701 and VR702 so that the signal level at TP701 is 400 ± 20mVp-p.

TP701

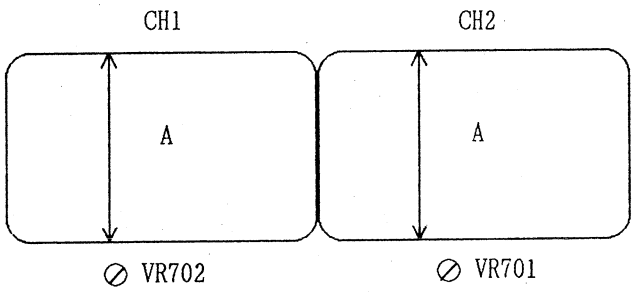

A = 400 ± 50mVp-p

12-18. Y PLAYBACK RF LEVEL ADJUSTMENT (FINE) (FOR AU-65/63/62 NTSC & PAL)

(W3 MOD & DEMOD)

TEST POINT	MODE	TAPE USED	M.EQ.	INPUT SIGNAL	ADJUSTMENT
TP307	PLAY	ALIGNMENT TAPE COLOR BAR	OSCILLOSCOPE	-------	VR317 (LIM RF LEV)
Step 1. MACHINE CONDITION			SW304 → OFF		
Step 2. Adjust VR317 so that the RF level at TP307 is 300 ± 20mVp-p.			⊘ VR317 TP307 : 300 ± 20mVp-p		
Step 3. SW304 → ON					

12-19. C PLAYBACK RF LEVEL ADJUSTMENT (FINE) (FOR AU-65/63/62 NTSC & PAL)

(W3 MOD & DEMOD)

TEST POINT	MODE	TAPE USED	M.EQ.	INPUT SIGNAL	ADJUSTMENT
TP703	PLAY	ALIGNMENT TAPE COLOR BAR	OSCILLOSCOPE	-------	VR714 (LIM IN RF LEV)
Step 1. MACHINE CONDITION			SW704 → OFF		
Step 2. Adjust VR714 so that the signal level at TP703 is 300 ± 20mVp-p.			⊘ VR714 TP703 : 300 ± 20mVp-p		
Step 3. SW704 → OFF Note: The Chroma Super Limiter Function is not used at this time.					

12-20. Y DROP OUT DETECTION LEVEL ADJUSTMENT (FOR AU-65/62 NTSC & PAL)

(W3 MOD & DEMOD)

TEST POINT	MODE	TAPE USED	M.EQ.	INPUT SIGNAL	ADJUSTMENT
TP307 TP315	JOG (STILL)	ALIGNMENT TAPE COLOR BAR	OSCILLOSCOPE	-------	VR320 (D.O. DET)

Step 1. MACHINE CONDITION	SW304 → OFF MODE : JOG (STOP) in the Color Bar portion.
Step 2. 1. Place the unit in the JOG STILL mode.	
Step 3. 1. SCOPE CH1 : TP307 SCOPE CH2 : TP315 2. Adjust VR320 so that the DO pulses appear when level A is 50 ± 5mVp-p at TP307. 3. Finally reset SW304 to "ON".	⊘ VR320 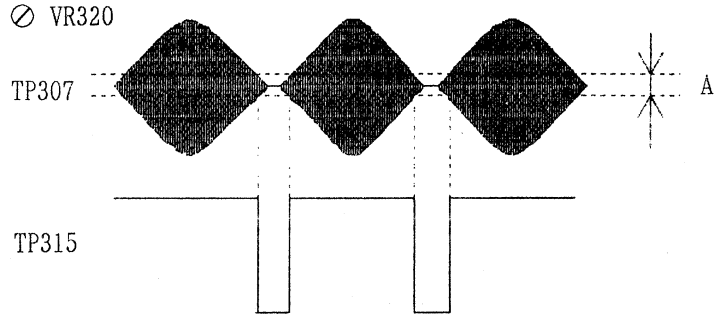 A = 50 ± 5mVp-p

12-21. Y DROP OUT DETECTION LEVEL ADJUSTMENT (FOR AU-63 NTSC & PAL)

(W3 MOD & DEMOD)

TEST POINT	MODE	TAPE USED	M.EQ.	INPUT SIGNAL	ADJUSTMENT
TP307 TP315	PLAY	ALIGNMENT TAPE COLOR BAR	OSCILLOSCOPE	-------	VR317 (LIM IN RF LEV) VR320 (D.O. DET)

Step 1. MACHINE CONDITION	SW304 → OFF
Step 2. 1. SCOPE : TP307 2. Adjust VR317 so that the RF level (A) becomes 50 ± 5mVp-p as shown in figure.	⊘ VR317 A = 50 ± 5mVp-p
Step 3. 1. SCOPE SETTING : 1) Set GND LEVEL 2) Set AC Mode 2. SCOPE : TP315 3. Adjust VR320 so that level (A) equals level (B). 4. After that adjust VR317 so that the RF level becomes 300 ± 20mVp-p at TP307. 5. SW304 → ON	⊘ VR320 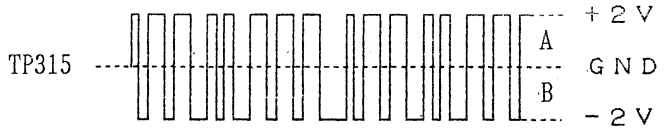 A = B

12-22. C DROP OUT DETECTION LEVEL ADJUSTMENT (FOR AU-65/62 NTSC & PAL)

(W3 MOD & DEMOD)

TEST POINT	MODE	TAPE USED	M.EQ.	INPUT SIGNAL	ADJUSTMENT
TP703 TP705	JOG (STILL)	ALIGNMENT TAPE COLOR BAR	OSCILLOSCOPE	-------	VR717 (D.O. DET)

Step 1. MACHINE CONDITION	SW704 → OFF MODE : JOG (STOP) at Color Bar portion.
Step 2. 1. Place the unit in the JOG STILL mode.	
Step 3. 1. SCOPE CH1 : TP703 SCOPE CH2 : TP705 2. Adjust VR717 so that the DO pulses are appeared when level A of TP703 is 50 ± 5mVp-p. 3. SW704 : NTSC : OFF PAL : ON Note [NTSC]: The Chroma Super Limiter Function is not used at this time in NTSC model.	⊘ VR717 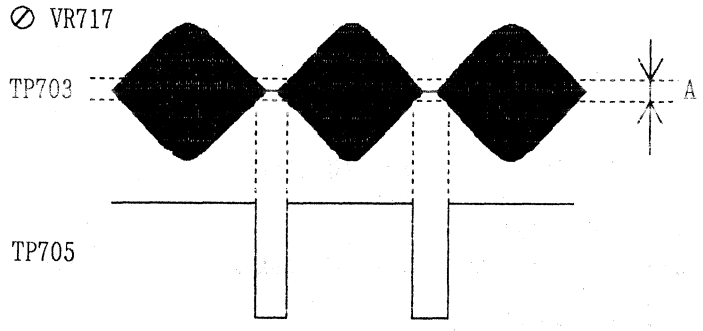 A = 50 ± 5mVp-p

12-23. C DROP OUT DETECTION LEVEL ADJUSTMENT (FOR AU-63 NTSC & PAL)

(W3 MOD & DEMOD)

TEST POINT	MODE	TAPE USED	M.EQ.	INPUT SIGNAL	ADJUSTMENT
TP703 TP705	PLAY	ALIGNMENT TAPE COLOR BAR	OSCILLOSCOPE	-------	VR714 (LIM IN RF LEV) VR717 (D.O. DET)

Step 1. MACHINE CONDITION	SW704 → OFF
Step 2. 1. SCOPE : TP703 2. Adjust VR714 so that the RF level (A) becomes 50 ± 5mVp-p as shown in figure.	⊘ VR714 A = 50 ± 5mVp-p
Step 3. 1. SCOPE SETTING : AC Mode 2. SCOPE : TP705 3. Adjust VR717 so that (A) level equals (B) level. 4. After that adjust VR714 so that the RF level becomes 300 ± 20mVp-p at TP703.	⊘ VR717 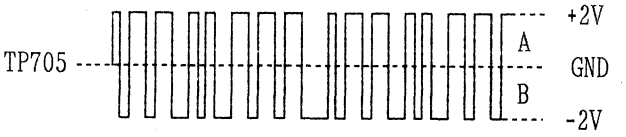
Step 4. SW704 : NTSC : OFF PAL : ON Note [NTSC] : The Chroma Super Limiter Function is is not used in NTSC model.	

12-24. TRACKING METER ADJUSTMENT (FOR AU-65/63/62 NTSC & PAL)

(W3 MOD & DEMOD)

TEST POINT	MODE	TAPE USED	M.EQ.	INPUT SIGNAL	ADJUSTMENT
TRACKING METER	PLAY	ALIGNMENT COLOR BAR	--------	-------	VR312

1. Adjust VR312 so that the TRACKING METER indicates 100% point.

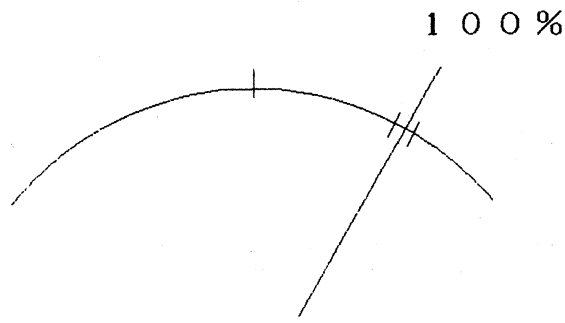

12-2 . Y S/H PULSE ADJUSTMENT (FOR AU-65/63/62 PAL)

(W3 MOD & DEMOD)

TEST POINT	MODE	TAPE USED	M.EQ.	INPUT SIGNAL	ADJUSTMENT
TP312 TP313	PLAY	ALIGNMENT SWEEP	OSCILLOSCOPE	-------	VR331 (S/H POS)

Note:
This adjustment is PAL model only.

1. Adjust VR311 as shown in figure.

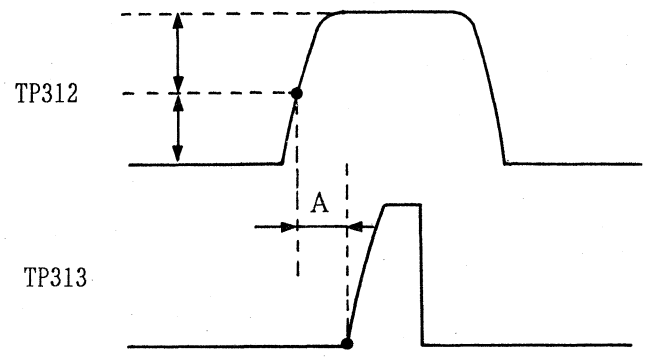

⊘ VR311
A = 0.8 ± 0.1 μsec.

12-26. Y 3.375MHz B.P.F ADJUSTMENT (FOR AU-65/63/62 PAL)

(W3 MOD & DEMOD)

TEST POINT	MODE	TAPE USED	M.EQ.	INPUT SIGNAL	ADJUSTMENT
TP312	PLAY	ALIGNMENT SWEEP	OSCILLOSCOPE	-------	VL303 (VR326)

Note:
This adjustment is PAL model only.

Step 1.

1. Connect the scope TP312 and set VR326 so that signal level at TP312 is minimum.
2. Adjust VL303 so that the signal peak is 3.375MHz.

12-27. Y AUTO EQ FREQUENCY CHARACTERISTIC ADJUSTMENT (1) (FOR AU-65/62 PAL)

(W3 MOD & DEMOD)

TEST POINT	MODE	TAPE USED	M.EQ.	INPUT SIGNAL	ADJUSTMENT
TP317 COMPONENT Y OUT	PLAY	ALIGNMENT SWEEP	OSCILLOSCOPE AND WAVE FORM MONITOR	-------	VR326 (A EQ PS) VR329 (A EQ R/P BAL)

Note:
This adjustment is PAL model only.

Step 1.

1. Set the machine condition SW306 "ON" and SW305 "OFF" mode.

SW306 ----→ ON
(A EQ SW)
SW305 ----→ OFF
(A EQ VAR)

Step 2.

1. Set the oscilloscope DC mode and playback alignment tape sweep portion.
2. Adjust VR329 and VR326 so that the channel DC difference is minimum (less than 0.5V) and center level of DC difference is GND at TP317.

TP317

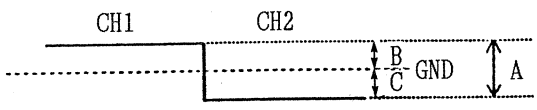

⊘ VR329 A = MINIMUM
⊘ VR326 B = C

Step 3. 1. Confirm COMPONENT Y OUT waveform by waveform monitor so that the frequency characteristic is not change with SW306 "ON" and "OFF". 2. If it is not same frequency characteristic with SW306 "ON" and "OFF", readjust Step 2.	
Step 4. 1. After adjustment reset the SW305 and the SW306 user setting mode. Note: Initial setting in factory is SW305 and SW306 "OFF" mode.	SW305, SW306 → USER SETTING MODE

12-28. Y AUTO EQ FREQUENCY CHARACTERISTIC ADJUSTMENT (2) (FOR AU-63 PAL)

(W3 MOD & DEMOD)

TEST POINT	MODE	TAPE USED	M.EQ.	INPUT SIGNAL	ADJUSTMENT
TP317 COMPONENT Y OUT	PLAY	ALIGNMENT SWEEP	OSCILLOSCOPE AND WAVE FORM MONITOR	-------	VR326 (A EQ PS) VR330 (A EQ DT BAL)

Note: This adjustment is PAL model only.	
Step 1. 1. Set the machine condition SW306 "ON" and SW305 "OFF" mode.	SW306 ----→ ON (A EQ SW) SW305 ----→ OFF (A EQ VAR)
Step 2. 1. Set the oscilloscope DC mode and playback alignment tape sweep portion. 2. Adjust VR330 and VR326 so that the channel DC difference is minimum (less than 0.5V) and center level of DC difference is GND at TP317.	TP317 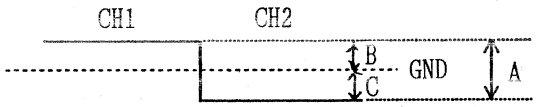 ⊘ VR330 A = MINIMUM ⊘ VR326 B = C
Step 3. 1. Confirm COMPONENT Y OUT waveform by waveform monitor so that the frequency characteristic is not change with SW306 "ON" and "OFF". 2. If it is not same frequency characteristic with SW306 "ON" and "OFF", readjust Step 2.	
Step 4. 1. After adjustment reset the SW305 and the SW306 user setting mode. Note: Initial setting in factory is SW305 and SW306 "OFF" mode.	SW305, SW306 → USER SETTING MODE

12-29. Y AUTO EQ V MODE CONFIRMATION (FOR AU-65/63/62 PAL)

(W3 MOD & DEMOD)

TEST POINT	MODE	TAPE USED	M.EQ.	INPUT SIGNAL	ADJUSTMENT
COMPONENT Y OUT	PLAY	ALIGNMENT SWEEP	WAVEFORM MONITOR	-------	VR327 (A EQ V)

Note:
This adjustment is PAL model only.

1. Set the machine condition SW306 and SW305 "ON" mode.
2. Confirm so that frequency characteristic is able to be changed by VR327.
3. After adjustment, reset the SW306 and SW305 user setting mode.

12-30. Y SELF RECODING AUTO EQ FREQUENCY CHARACTERISTIC COMFIRMATION (FOR AU-65 PAL)

(W3 MOD & DEMOD)

TEST POINT	MODE	TAPE USED	M.EQ.	INPUT SIGNAL	ADJUSTMENT
TP317 (on W3 P.C.Board) CONPONENT Y OUT	REC ↓ PLAY	BLANK TAPE	OSCILLOSCOPE AND WAVEFORM MONITOR	COMPONENT 60% SWEEP	VR503 (Y BU LEV.) (on W4 P.C.Board)

Note:
This adjustment AU-65 PAL only.

Step 1.

1. Set the machine condition SW306 "ON" and SW305 "OFF" mode.

SW306 ⟶ ON
(A EQ SW)
SW305 ⟶ OFF
(A EQ VAR)

Step 2.

1. Make a recording sweep signal.
2. Then playback the just recording portion.
3. Connect the scope to TP317 and confirm that DC level difference is less than 1V and center point of the DC level difference is GND.

TP317

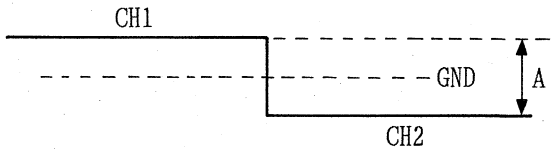

A = Less than 1V

Step 3. 1. Connect the waveform monitor to COMPONENT Y OUT and confirm that the frequency characteristic is same with SW306 "ON" and "OFF". 2. If it is not same frequency characteristic, adjust VR503 so that the selfrecording and playback frequency characteristic with SW306 "ON" and "OFF" is same.	
Step 4. 1. However if the frequency characteristic is unbalance between CH1 and CH2, adjust VR503 so that the frequency characteristic of two channels average with SW306 "ON" and with SW306 "OFF" are same. And adjust recording current without channels difference. 2. When Step 4 adjustment is done readjust recording frequency adjustment.	

12-31. C S/H PULSE ADJUSTMENT (FOR AU-65/63/62 PAL)

(W3 MOD & DEMOD)

TEST POINT	MODE	TAPE USED	M.EQ.	INPUT SIGNAL	ADJUSTMENT
TP709 TP710	PLAY	ALIGNMENT SWEEP	OSCILLOSCOPE	-------	VR726 (S/H POS)

Note:
This adjustment is PAL model only.

1. Adjust VR726 as shown in figure.

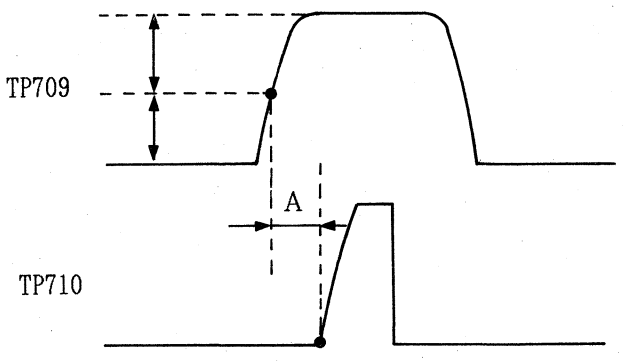

A = 0.5 ± 0.1μ sec.

12-32.C AUTO EQ FREQUENCY CHARACTERISTIC ADJUSTMENT (FOR AU-65/63/62 PAL)

(W3 MOD & DEMOD)

TEST POINT	MODE	TAPE USED	M.EQ.	INPUT SIGNAL	ADJUSTMENT
TP712 COMPONENT Pb OUT	PLAY	ALIGNMENT SWEEP	OSCILLOSCOPE AND WAVEFORM MONITOR	-------	VR723 (A EQ PS) VR725 (A EQ BAL)

Note:
This adjustment is PAL model only.

Step 1.

1. Set the machine condition SW306 "ON" and SW305 "OFF".

SW306 ⟶ ON
(A EQ SW)
SW305 ⟶ OFF
(A EQ VAR)

Step 2.

1. Set the oscilloscope DC mode and playback alignment tape sweep portion.
2. Adjust VR725 and VR723 so that the channel DC difference is minimum (less than 0.5V) and center level of DC difference is GND at TP721.

TP712

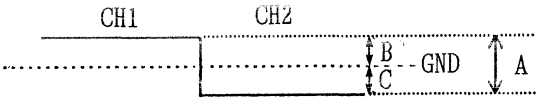

⊘ VR725 A = MINIMUM
⊘ VR723 B = C

Step 3.

1. Confirm COMPONENT Pb OUT waveform by waveform monitor so that the frequency characteristic is not change with SW306 "ON" and "OFF".
2. If it is not same frequency characteristic with SW306 "ON" and "OFF", readjust Step 2.

Step 4.

1. After adjustment reset the SW305 and the SW306 user setting mode.

Note:
Initial setting in factory is SW305 and SW306 "OFF".

SW305, SW306 → USER SETTING MODE

12-33. C AUTO EQ V MODE CONFIRMATION (FOR AU-65/63/62 PAL)

(W3 MOD & DEMOD)

TEST POINT	MODE	TAPE USED	M.EQ.	INPUT SIGNAL	ADJUSTMENT
COMPONENT Pb OUT	PLAY	ALIGNMENT SWEEP	WAVEFORM MONITOR	-------	VR724 (A EQ V)

Note:
This adjustment is PAL model only.

1. Set the machine condition SW306 and SW305 "ON" mode.
2. Confirm so that frequency characteristic is able to be change by VR724
3. After adjustment, reset the SW306 and SW305 user setting mode.

12-34. C SELF RECODING AUTO EQ FREQUENCY CHARACTERISTIC COMFIRMATION (FOR AU-65 PAL) (W3 MOD & DEMOD)

TEST POINT	MODE	TAPE USED	M.EQ.	INPUT SIGNAL	ADJUSTMENT
TP712 (on W3 P.C.Board) CONPONENT Pb OUT	REC ↓ PLAY	BLANK TAPE	OSCILLOSCOPE AND WAVEFORM MONITOR	COMPONENT 60% SWEEP	VR504 (C BU LEV.) (on W4 P.C.Board)

Note: This adjustment AU-65 PAL only.	
Step 1. 1. Set the machine condition SW306 "ON" and SW305 "OFF" mode.	SW306 ——→ ON (A EQ SW) SW305 ——→ OFF (A EQ VAR)
Step 2. 1. Make a recording sweep signal. 2. Then playback the just recording portion. 3. Connect the scope to TP712 and confirm that DC level difference is less than 1V and center point of the DC level difference is GND.	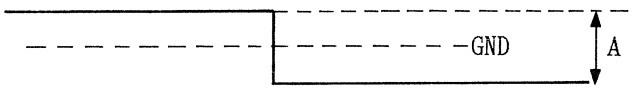 A = Less than 1V
Step 3. 1. Connect the waveform monitor to COMPONENT Pb OUT and confirm that the frequency characteristic is same with SW306 "ON" and "OFF". 2. If it is not same frequency characteristic, adjust VR504 so that the selfrecording and playback frequency characteristic with SW306 "ON" and "OFF" is same.	
Step 4. 1. However if the frequency characteristic is unbalance between CH1 and CH2, adjust VR504 so that the frequency characteristic of two channels average with SW306 "ON" and with SW306 "OFF" are same. And adjust recording current without channels difference. 2. When Step 4 adjustment is done readjust recording frequency adjustment.	
Step 5. 1. After adjustment reset the SW305 and the SW306 user setting mode. Note: Initial setting in factory is SW305 and SW306 "OFF".	SW305, SW306 → USER SETTING MODE

13. DECODER & CTCM (W4) BOARD (2/2)

DECODER & CTCM SECTION (2/2) (W4) FLOWCHART FOR AU-65

＊BEFORE ADJUSTMENT
The adjustment with this comment is necessary to adjust after the following adjustments are completed.

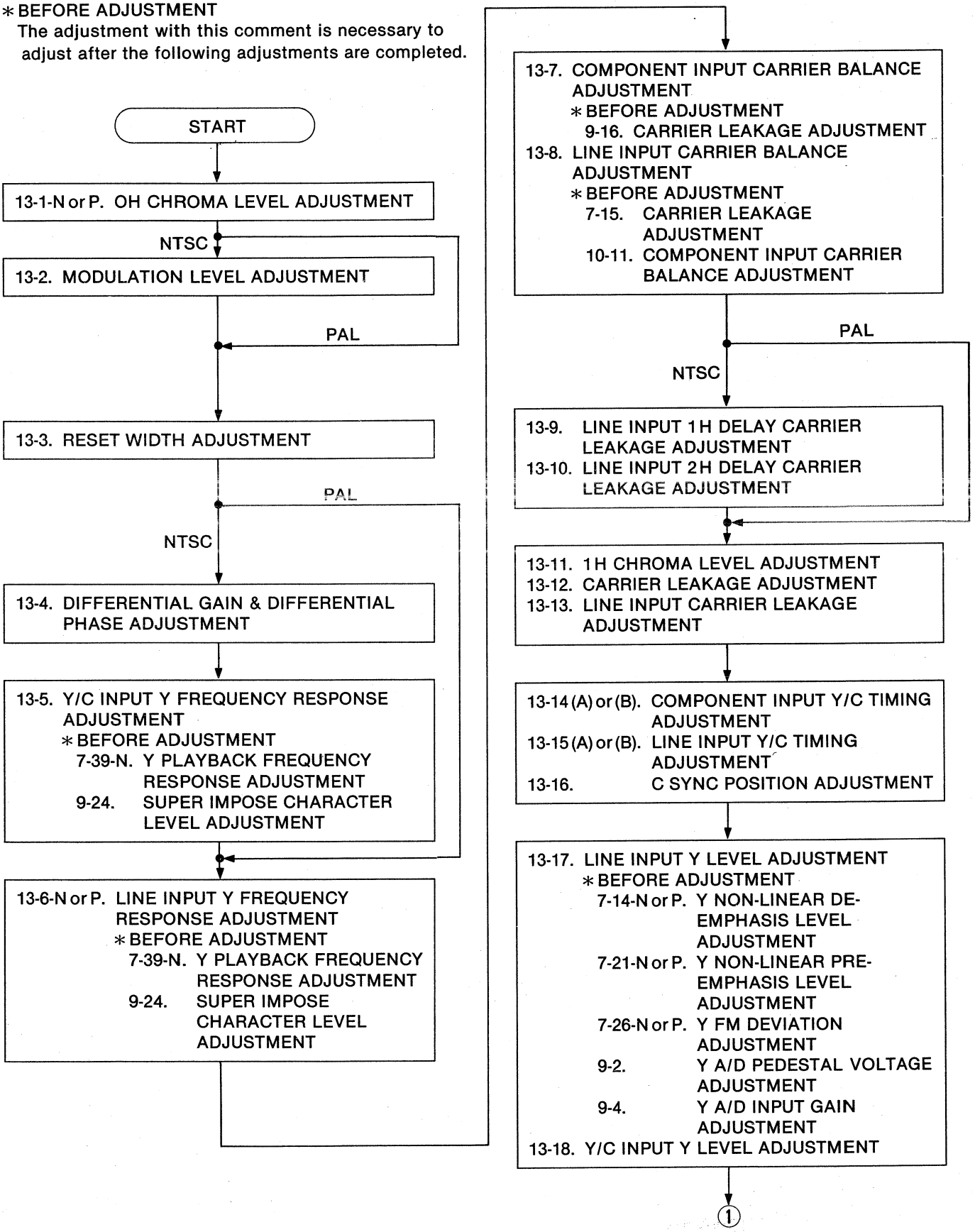

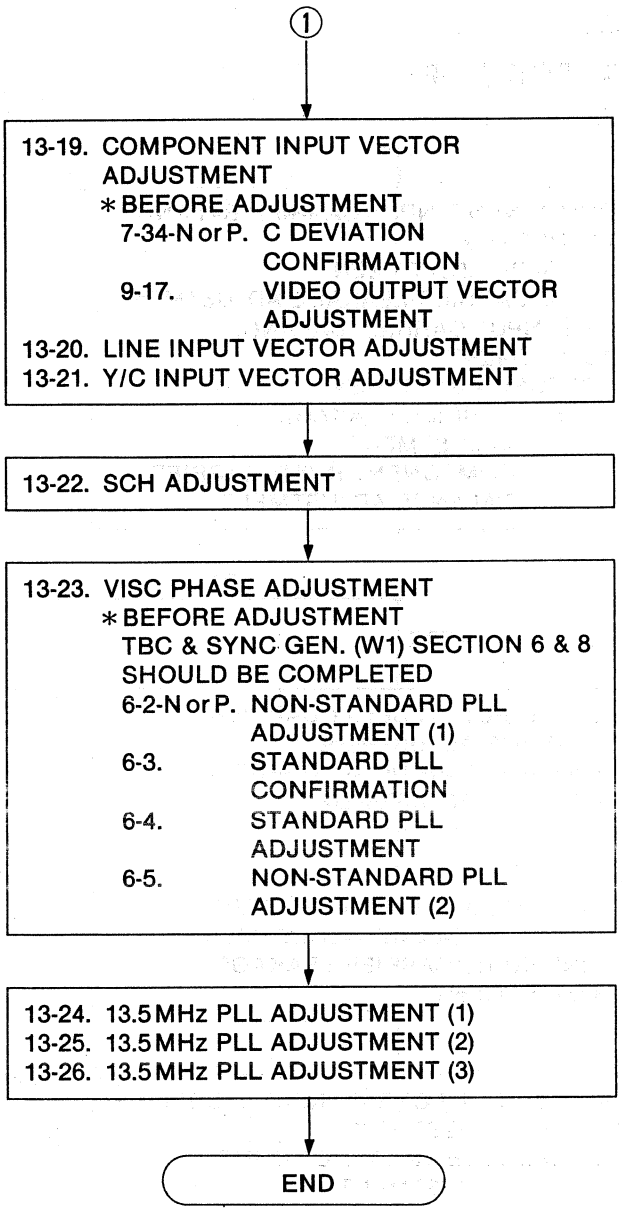
①
13-19. COMPONENT INPUT VECTOR ADJUSTMENT
* BEFORE ADJUSTMENT
7-34-N or P. C DEVIATION CONFIRMATION
9-17. VIDEO OUTPUT VECTOR ADJUSTMENT
13-20. LINE INPUT VECTOR ADJUSTMENT
13-21. Y/C INPUT VECTOR ADJUSTMENT
13-22. SCH ADJUSTMENT
13-23. VISC PHASE ADJUSTMENT
* BEFORE ADJUSTMENT
TBC & SYNC GEN. (W1) SECTION 6 & 8 SHOULD BE COMPLETED
6-2-N or P. NON-STANDARD PLL ADJUSTMENT (1)
6-3. STANDARD PLL CONFIRMATION
6-4. STANDARD PLL ADJUSTMENT
6-5. NON-STANDARD PLL ADJUSTMENT (2)
13-24. 13.5MHz PLL ADJUSTMENT (1)
13-25. 13.5MHz PLL ADJUSTMENT (2)
13-26. 13.5MHz PLL ADJUSTMENT (3)
END

13. DECODER & CTCM (W4) BOARD (2/2)

13-1-N. OH CHROMA LEVEL ADJUSTMENT (FOR AU-65 NTSC)

(W4 DEC & CTCM)

TEST POINT	MODE	TAPE USED	M.EQ.	INPUT SIGNAL	ADJUSTMENT
TP3	E-E (EJECT)	-------	OSCILLOSCOPE	LINE INPUT 75% COLOR BAR	VR1 (INPUT LEV.)

Step 1.

1. SCOPE : TP3

2. Adjust VR1 so that the level (A) is 0.8 ± 0.01Vp-p as shown in figure.

NOTE:
BAND WIDTH FILTER of SCOPE = 20MHz

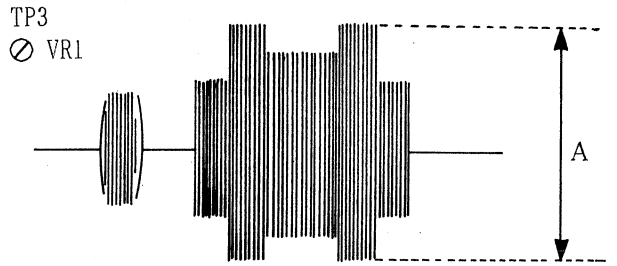

A = 0.8 ± 0.01Vp-p

13-1-P. OH CHROMA LEVEL ADJUSTMENT (FOR AU-65 PAL)

(W4 DEC & CTCM)

TEST POINT	MODE	TAPE USED	M.EQ.	INPUT SIGNAL	ADJUSTMENT
TP3	E-E (EJECT)	-------	OSCILLOSCOPE	LINE INPUT 100% COLOR BAR	VR1 (INPUT LEV.)

Step 1.

1. SCOPE : TP3

2. Adjust VR1 so that the level (A) is 1.14 ± 0.01Vp-p as shown in figure.

Note:
BAND WIDTH FILTER of SCOPE = 20MHz

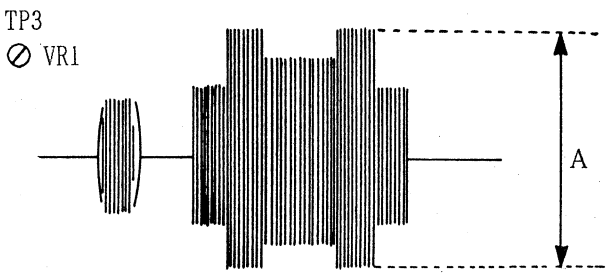

A = 1.14 ± 0.01Vp-p

13-2. MODULATION LEVEL ADJUSTMENT (FOR AU-65 NTSC)

(W4 DEC & CTCM)

TEST POINT	MODE	TAPE USED	M.EQ.	INPUT SIGNAL	ADJUSTMENT
TP1	E-E (EJECT)	-------	OSCILLOSCOPE	LINE INPUT 75% COLOR BAR	VR2 (MOD. LEV.)

Note:
This adjustment is NTSC only.

Step 1.

1. SCOPE : TP1
2. Adjust VR2 so that the level (A) is 0.6 ± 0.01Vp-p as shown in figure.

TP1
⊘ VR2

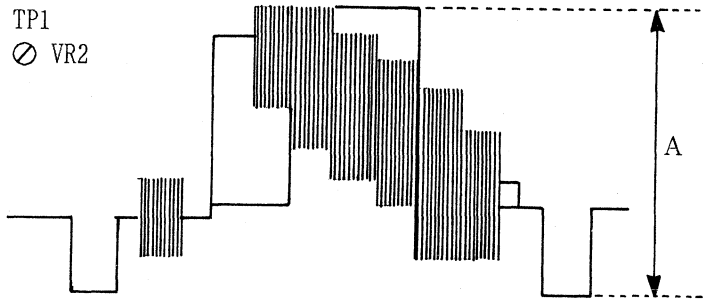

A = 0.6 ± 0.01Vp-p

13-3. RESET WIDTH ADJUSTMENT (FOR AU-65 NTSC & PAL)

(W4 DEC & CTCM)

TEST POINT	MODE	TAPE USED	M.EQ.	INPUT SIGNAL	ADJUSTMENT
IC401 Pin 12	E-E (EJECT)	-------	OSCILLOSCOPE	LINE INPUT COLOR BAR	VR403 (RSTW)

Step 1.

1. SCOPE : IC401
2. Adjust VR403 so that the pulse width (A) is 4.0 ± 0.05 μsec as shown in figure.

IC401 Pin 12
⊘ VR403

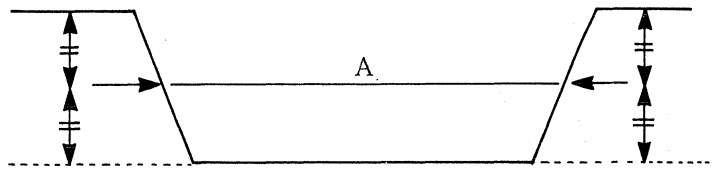

A = 4.0 ± 0.05μsec

13-4. DIFFERENCIAL GAIN & DIFFERENCIAL PHASE ADJUSTMENT (FOR AU-65 NTSC)

(W4 DEC & CTCM)

TEST POINT	MODE	TAPE USED	M.EQ.	INPUT SIGNAL	ADJUSTMENT
TP501 TP502	E-E (EJECT)	-------	OSCILLOSCOPE	COMPOSITE 80IRE MOD. RAMP TO LINE INPUT	VR3 (LIN.)

Note:
This adjustment is NTSC only.

Step 1.

1. SCOPE CH1 : TP501
   SCOPE CH2 : TP502
2. Adjust VR3 so that the B and C are flat.
3. Confirm that the B and C are less than 1.5% against the level (A).
4. If it is not, readjust VR3.

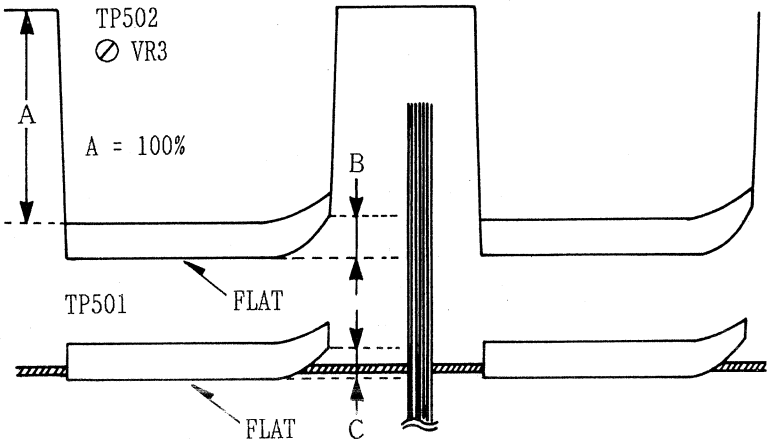

B = C = Less than 1.5%

13-5. Y/C INPUT Y FREQUENCY RESPONSE ADJUSTMENT (FINE) (FOR AU-65 NTSC)

(W4 DEC & CTCM)

TEST POINT	MODE	TAPE USED	M.EQ.	INPUT SIGNAL	ADJUSTMENT
COMPONENT Y OUT	E-E (EJECT)	-----	WAVEFORM MONITOR OR SCOPE	H SWEEP (Y/C INPUT)	VC201 (Y/C FREQ. RESP.)

Note:
This adjustment is NTSC only.

Step 1.

MACHINE CONDITION

1. INPUT SELECT : Y/C side
   (on Pull Out Drawer)
2. YC/COMPONENT SELECT : YC side
   (on Front Sub Panel)

Step 2.

The following adjustments should be completed before this adjustment.

1) 7-39-N Y PLAYBACK FREQUENCY RESPONSE ADJ. (W3)
2) 9-24 Y OUT FREQUENCY RESPONSE ADJ. (W2)

Y OUT

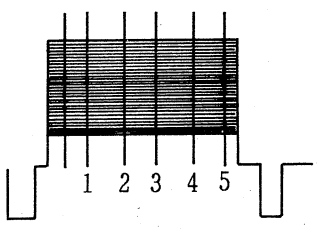

0.1MHz : 4MHz = 100 : 100 ± 2

13-6-N. LINE INPUT Y FREQUENCY RESPONSE ADJUSTMENT (FINE) (FOR AU-65 NTSC)

(W4 DEC & CTCM)

TEST POINT	MODE	TAPE USED	M.EQ.	INPUT SIGNAL	ADJUSTMENT
COMPONENT Y OUT	E-E (EJECT)	-----	WAVEFORM MONITOR OR SCOPE	H SWEEP (LINE INPUT)	VC1 (FREQ)

Note:
This adjustment is NTSC mode only.

Step 1.
MACHINE CONDITION

INPUT SELECT : LINE

Step 2.

Note:
The following adjustments should be completed before this adjustment.
1) 7-39-N Y PLAYBACK FREQUENCY RESPONSE ADJ. (W3)
2) 9-24 Y OUT FREQUENCY RESPONSE ADJ. (W2)
3) 13-5 Y/C INPUT Y FREQUENCY RESPONSE ADJ. (W4)

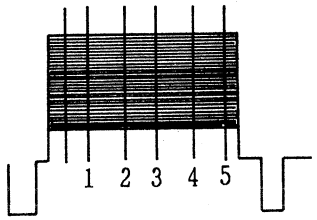

0.1MHz : 4MHz = 100 : 100 ± 2

13-6-P. LINE INPUT Y FREQUENCY RESPONSE ADJUSTMENT (FINE) (FOR AU-65 PAL)

(W4 DEC & CTCM)

TEST POINT	MODE	TAPE USED	M.EQ.	INPUT SIGNAL	ADJUSTMENT
VIDEO 2 OUT	E-E (EJECT)	-----	WAVEFORM MONITOR OR SCOPE	SWEEP (LINE INPUT)	VC201 (Y FREQ)

Step 1.

MACHINE CONDITION

INPUT SELECT : LINE

Connect a jumper wire between F15 and GND on W2 P.C.Board to out chroma signal.

Step 2.

Note:
The following adjustments should be completed before this adjustment.
1) 7-39-P Y PLAYBACK FREQUENCY RESPONSE ADJ. (W3)
2) 9-24 Y OUT FREQUENCY RESPONSE ADJ. (W2)

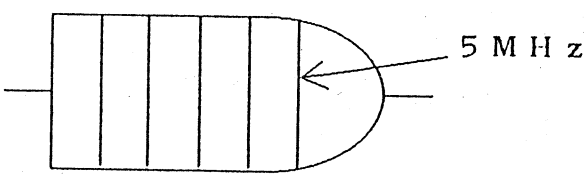

0.1 ~ 5MHz : FLAT (± 1.0dB)

13-7. COMPONENT INPUT CARRIER BALANCE ADJUSTMENT (FINE) (FOR AU-65 NTSC & PAL)

(W4 DEC & CTCM)

TEST POINT	MODE	TAPE USED	M.EQ.	INPUT SIGNAL	ADJUSTMENT
COMPONENT Pr/Pb OUT	E-E (EJECT)	-----	OSCILLOSCOPE	COMPONENT COLOR BAR	VR601 (Pb CLAMP REF) VR602 (Pr CLAMP REF)

Step 1.

CARRIER LEAKAGE ADJ. (9-16) (W2) should be completed.

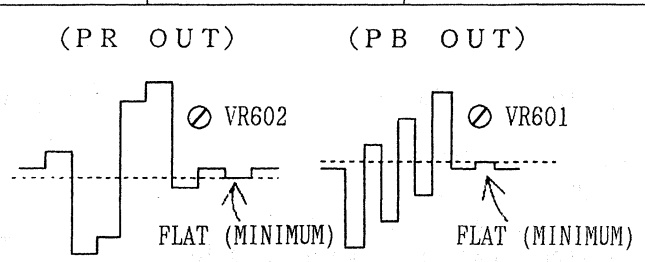

13-8. LINE INPUT CARRIER BALANCE ADJUSTMENT (FINE) (FOR AU-65 NTSC & PAL)

(W4 DEC & CTCM)

TEST POINT	MODE	TAPE USED	M.EQ.	INPUT SIGNAL	ADJUSTMENT
COMPONENT Pr/Pb OUT	E-E (EJECT)	-----	WAVEFORM MONITOR	LINE INPUT COLOR BAR	VR216 (Pb BLK DC) VR217 (Pr BLK DC)

Step 1.

The following adjustments should be completed before this adjustment.

1) CARRIER LEAKAGE ADJ. (9-16) (W2)
2) COMPONENT INPUT CARRIER BALANCE ADJ. (13-7) (W4)

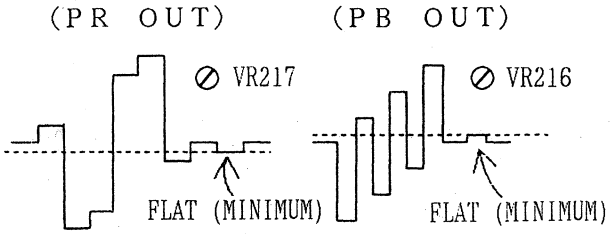

13-9. LINE INPUT 1H DELAY CARRIER LEAKAGE ADJUSTMENT (FINE) (FOR AU-65 NTSC)

(W4 DEC & CTCM)

TEST POINT	MODE	TAPE USED	M.EQ.	INPUT SIGNAL	ADJUSTMENT
TP3 TP4	EJECT	-----	OSCILLOSCOPE	LINE INPUT 75% COLOR BAR	VR6 (1H DELAY) VR7 (1H LEV)

Note:
This adjustment is NTSC only.

1. SCOPE CH1 : TP3
   SCOPE CH2 : TP4
   Set CH1 & CH2's range to be equal VOLTS/DIV.
2. Set the scope CH2 to INV mode and select ADD mode.
3. Adjust VR6 and VR7 so that the level (A) is minimized as shown in figure.

⊘ VR6, VR7

TP3 + INV. TP4

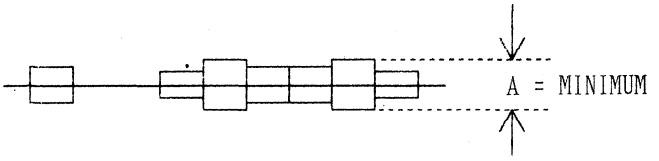

13-10. LINE INPUT 2H DELAY CARRIER LEAKAGE ADJUSTMENT (FINE) (FOR AU-65 NTSC)

(W4 DEC & CTCM)

TEST POINT	MODE	TAPE USED	M.EQ.	INPUT SIGNAL	ADJUSTMENT
TP3 TP5	EJECT	-----	OSCILLOSCOPE	LINE INPUT 75% COLOR BAR	VR8 (2H DELAY) VR9 (2H LEV)

Note:
This adjustment is NTSC only.

1. SCOPE CH1 : TP3
   SCOPE CH2 : TP5
   Set CH1 & CH2's range to be equal VOLTS/DIV.
2. Set the scope CH2 to INV mode and select ADD mode.

⊘ VR8, VR9

TP3 + INV. TP5

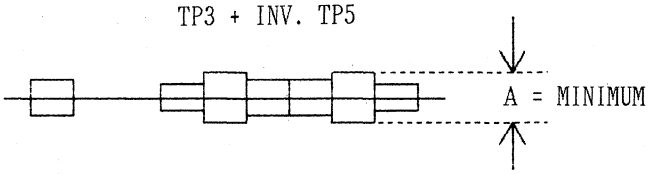

13-11. 1H CHROMA LEVEL ADJUSTMENT (FOR AU-65 NTSC & PAL)

(W4 DEC & CTCM)

TEST POINT	MODE	TAPE USED	M.EQ.	INPUT SIGNAL	ADJUSTMENT
TP202	E-E (EJECT)	-----	OSCILLOSCOPE	LINE INPUT COLOR BAR (NTSC 75%) (PAL 100%)	VR204 (C LEV.)

Step 1.

1. SCOPE CH1 : TP202

2. Adjust VR204 so that the level (A) is
   NTSC 1.1 ± 0.05Vp-p
   PAL 1.4 ± 0.05Vp-p

Note:
BAND WIDTH FILTER of SCOPE = 20MHz

TP202 ⊘ VR204

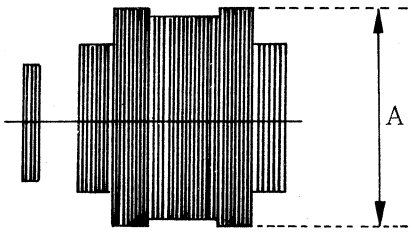

13-12. CARRIER LEAKAGE ADJUSTMENT (FOR AU-65 NTSC & PAL)

(W4 DEC & CTCM)

TEST POINT	MODE	TAPE USED	M.EQ.	INPUT SIGNAL	ADJUSTMENT
COMPONENT Y OUT	E-E (EJECT)	-----	OSCILLOSCOPE	LINE INPUT COLOR BAR	SW201 VR205 (C REJ.) VR202 (1H V TMG)

Step 1.

MACHINE CONDITION
(STD mode)

1. Set-up Menu No. 1011 → 00 FRONT SWITCH

2. Input signal is standard signal from signal generator.

Step 2.

1. SCOPE CH1 : COMPONENT Y OUT

2. SW201 : ADJ. side

3. Adjust VR205 and VR202 and nullify the carrier leakage.

4. SW201 : NORM side

TP504

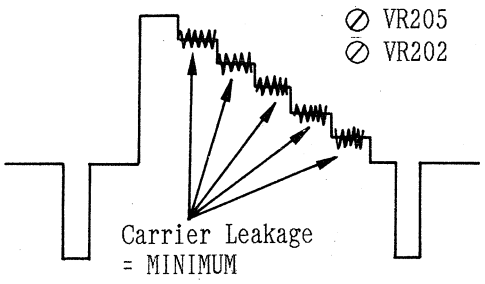

13-13. LINE INPUT CARRIER LEAKAGE ADJUSTMENT (FINE) (3) (FOR AU-65 NTSC & PAL)

(W4 DEC & CTCM)

TEST POINT	MODE	TAPE USED	M.EQ.	INPUT SIGNAL	ADJUSTMENT
COMPONENT Y OUT TP201	E-E (EJECT)	-----	OSCILLOSCOPE	LINE IN COLOR BAR	SW201 VR203 (1H ADJ) VR205 (C REJ) VR202 (1HV TMG) VR10 (NSTD C LEV)

Step 1. MACHINE CONDITION (STD mode)	1. Set-up Menu No. 1011 → 00 FRONT SWITCH 2. Input signal is standard signal from signal generator.
Step 2. 1. SCOPE : COMPONENT Y OUT 2. SW201 : NORM side • Adjust VR203 and VR205 so that the carrier leakage is minimized (Less than 10mVp-p). • SCOPE : TP201 • Adjust VR202 so that the DC level is 0 ± 0.1Vp-p.	VR203, VR205, VR10 COMPONENT Y OUT 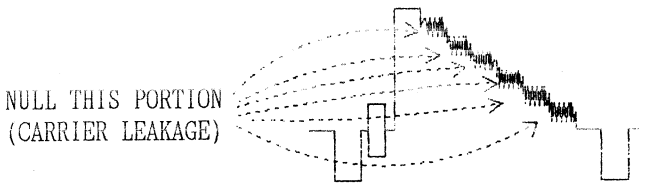
Step 3. (NTSC only) MACHINE CONDITION (NSTD mode)	1. Set-up Menu No. 1011 → 01 NON-STD
Step 4. (NTSC only) 1. SCOPE : COMPONENT Y OUT 2. Adjust VR10 so that the carrier leakage is minimized (Less than 10mVp-p).	

13-14(A). COMPONENT INPUT Y/C TIMING ADJUSTMENT (FINE)(BY USING WAVEFORM MONITOR) (FOR AU-65 NTSC & PAL)

(W4 DEC & CTCM)

TEST POINT	MODE	TAPE USED	M.EQ.	INPUT SIGNAL	ADJUSTMENT
COMPONENT Y OUT Pb OUT Pr OUT	SELF REC/PLAY	BLANK TAPE	WAVEFORM MONITOR	COMPONENT PULSE & BAR (MOD. 20T)	VR505 (Y/C TMG)

Step 1.

1. WAVEFORM MONITOR CONDITION

RESPONSE : DIFFD STEP
VOLTS FULL SCALE : MAX (UNCAL)
DISPLAY : ×1 (5)
MAGNIFIER : ×50 (0.1)
TRIGGER : VIDEO OUT OF VTR

Step 2.

1. Make a recording, then play back the recorded portion.
2. WFM MONITOR

   CHA : COMPONENT Y OUT

   CHB : COMPONENT Pr (Pb) OUT

   EXT SYNC CH1 : VIDEO OUT
   CH2 : VIDEO OUT

3. COMPONENT OUTPUT CABLE LENGTH : Same Length
4. Observe the falling portion of modulated 20T pulse signal.
5. Adjust the vertical and horizontal position of WFM Monitor so that the center of falling edge is set to 0.3 axis as shown in figure.
6. Change the Input Select of WFM Monitor from A ch (COMPONENT Y OUT) to B ch (COMPONENT Pr OUT).
7. Measure the difference between Y and Pr (Pb) signal timing.
8. If it is not within ± 20nsec, readjust VR505 and repeat item 1 to 8 of Step 2.

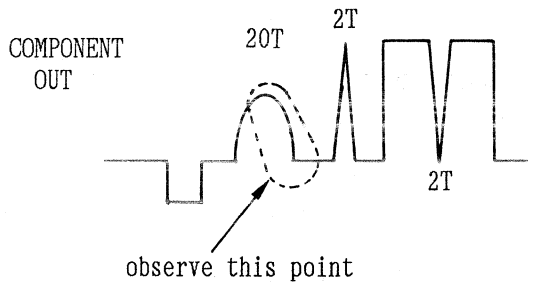

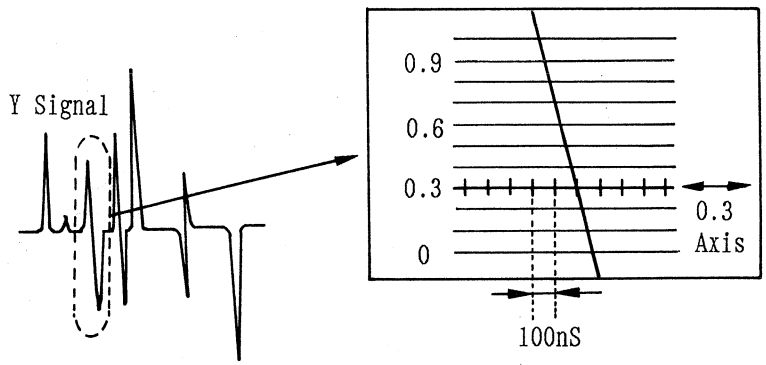

13-14(B). COMPONENT INPUT Y/C TIMING ADJUSTMENT (FINE)(BY USING OSCILLOSCOPE) (FOR AU-65 NTSC & PAL)

(W4 DEC & CTCM)

TEST POINT	MODE	TAPE USED	M.EQ.	INPUT SIGNAL	ADJUSTMENT
COMPONENT Y OUT Pb OUT Pr OUT	SELF REC/PLAY	BLANK TAPE	OSCILLOSCOPE	COMPONENT COLOR BAR	VR505 (Y/C TMG)

Step 1.

1. Make a recording.
2. Then play back the recorded portion.
3. SCOPE CH1 : COMPONENT Y OUT

   SCOPE CH2 : COMPONENT Pr (Pb) OUT

*Note:
COMPONENT OUTPUT CABLE LENGTH should be the Same Length.

4. Confirm that the Y/C Timing of component output is less than 20nsec.
5. If it is not, readjust VR505 and repeat from item 1 to 4.

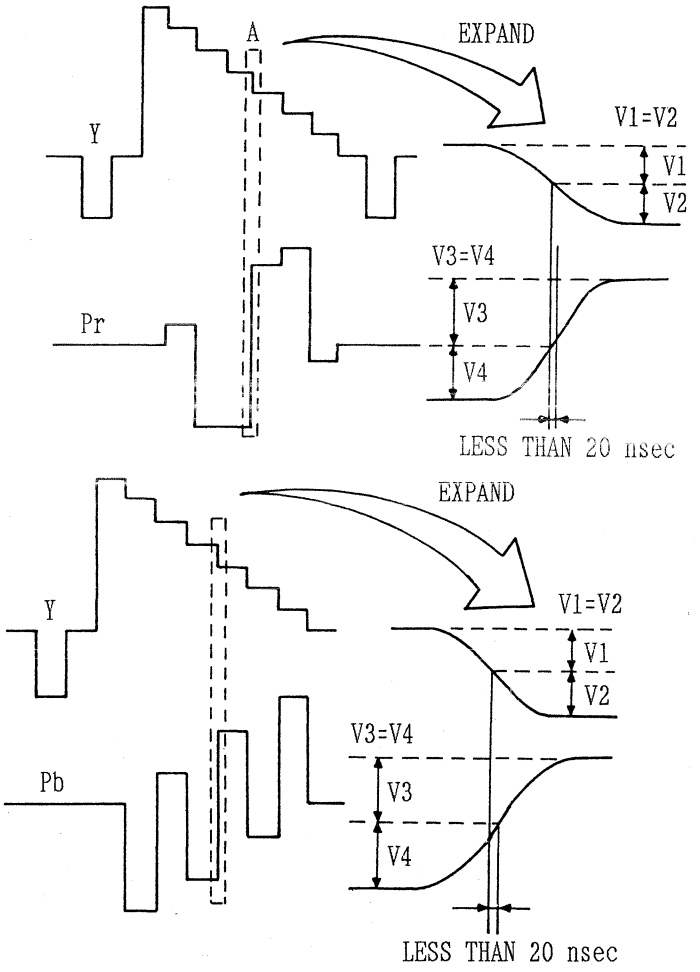

13-15(A). LINE INPUT Y/C TIMING ADJUSTMENT (FINE) (BY USING WAVEFORM MONITOR) (FOR AU-65 NTSC & PAL)

(W4 DEC & CTCM)

TEST POINT	MODE	TAPE USED	M.EQ.	INPUT SIGNAL	ADJUSTMENT
COMPONENT Y OUT Pb OUT Pr OUT	SELF REC/PLAY	BLANK TAPE	WAVEFORM MONITOR	LINE IN Mod. 12.5T W/RAMP SIGNAL	VR214 (Pr TMG) VR212 (Pb TMG)

Step 1.

1. WAVEFORM MONITOR CONDITION

RESPONSE : DIFFD STEP
VOLTS FULL SCALE : MAX (UNCAL)
DISPLAY : ×1 (5)
MAGNIFIER : ×50 (0.1)
TRIGGER : VIDEO OUT OF VTR

Step 2.

1. Make a recording then, play back the just recorded portion.
2. WFM MONITOR

   CH A INPUT : COMPONENT Y OUT

   CH B INPUT : COMPONENT Pr (Pb) OUT

   EXT SYNC CH A : VIDEO OUT
   CH B : VIDEO OUT

3. Observe the falling portion of modulated 12.5T pulse signal.
4. Adjust the vertical and horizontal position of WFM Monitor so that the center of falling edge is set to 0.3 axis as shown in figure.
5. Change the Input Select of WFM Monitor from A ch (COMPONENT Y OUT) to B ch (COMPONENT Pr OUT).
6. Measure the difference between Y and Pr (Pb) signal timing.
7. If it is not within ± 20nsec, readjust VR214 (Pr) and VR212 (Pb) and repeat item 1 to 7 of STEP 2.

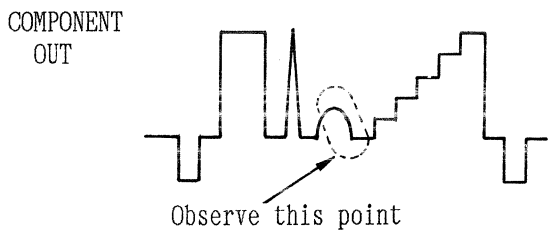

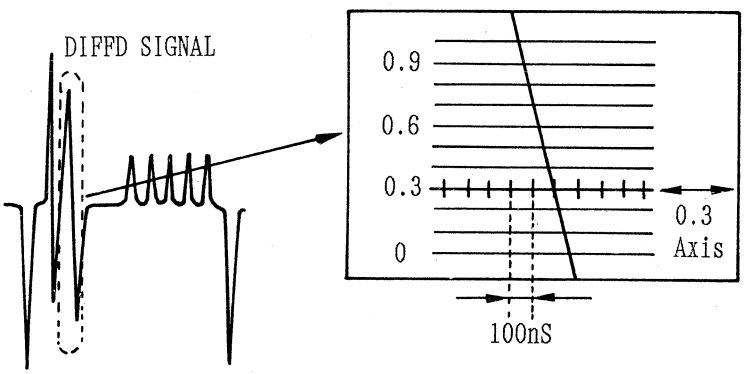

13-15(B). LINE INPUT Y/C TIMING ADJUSTMENT (FINE) (BY USING OSCILLOSCOPE) (FOR AU-65 NTSC & PAL)

(W4 DEC & CTCM)

TEST POINT	MODE	TAPE USED	M.EQ.	INPUT SIGNAL	ADJUSTMENT
COMPONENT Y OUT Pb OUT Pr OUT	SELF REC/PLAY	BLANK TAPE	OSCILLOSCOPE	LINE IN COLOR BAR	VR214 (Pr TMG) VR212 (Pb TMG)

Step 1.

1. Make a recording for a few minutes.

2. Play back the just recorded portion.

3. SCOPE CH1 : COMPONENT
   Y OUT
   SCOPE CH2 : COMPONENT
   Pr (Pb) OUT

*Note :
COMPONENT OUTPUT CABLE LENGTH
should be the Same Length.

4. Confirm that the Y/C Timing of component output is less than 20nse.

5. If it is not, readjust VR214 (Pr), VR212 (Pb) and repeat from item 1 to 4.

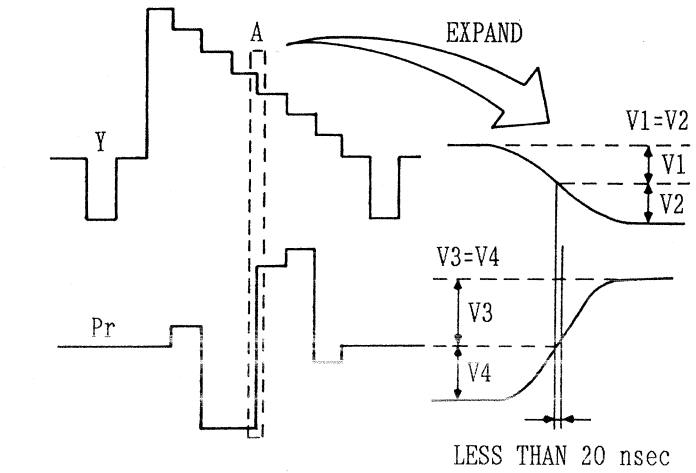

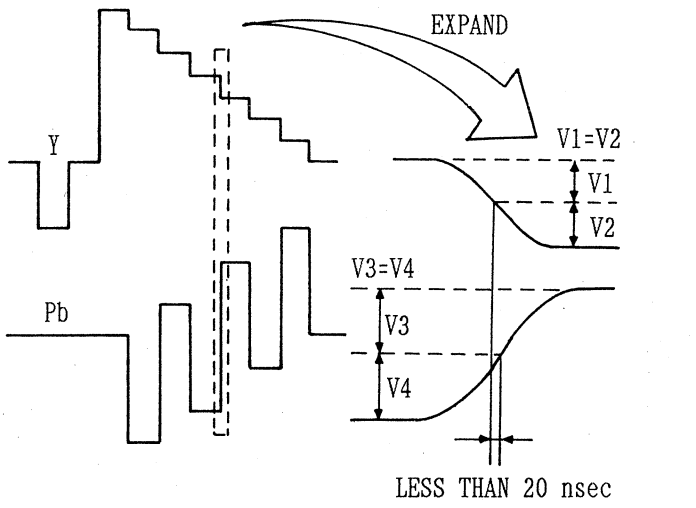

13-16. C SYNC POSITION ADJUSTMENT (FINE) (FOR AU-65 NTSC & PAL)

(W4 DEC & CTCM)

TEST POINT	MODE	TAPE USED	M.EQ.	INPUT SIGNAL	ADJUSTMENT
TP601 TP704	E-E (EJECT)	------	OSCILLOSCOPE	COMPONENT COLOR BAR	VR704 (C SY POS)

Step 1. MACHINE CONDITION (STD mode)	1. Set-up Menu No. 1011 → 00 FRONT SWITCH 2. Input signal is standard signal from signal generator.
Step 2. 1. SCOPE CH1 : TP601 SCOPE CH2 : TP704 2. Delay the scope at C Sync and Burst portion. 3. Adjust VR704 so that the B period is 18 cycles ± 5 nsec. Note: When the scope CH1 and CH2 is connected to TP601 and TP704 at the same time, a beat noise occurs the waveform. Please measure the period "A" separately.	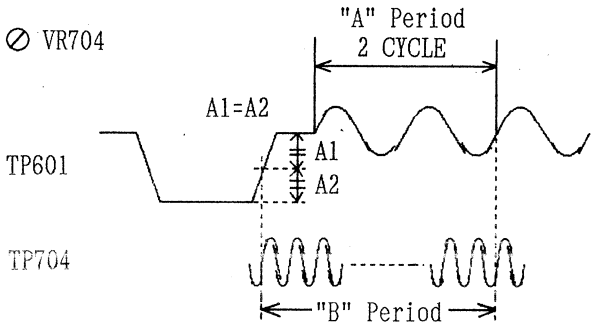 "B" = 18 cycles ± 5 nsec

13-17. LINE INPUT Y LEVEL ADJUSTMENT (FINE) (FOR AU-65 NTSC & PAL)

(W4 DEC & CTCM)

TEST POINT	MODE	TAPE USED	M.EQ.	INPUT SIGNAL	ADJUSTMENT
VIDEO 2 OUT	E-E (EJECT)	------	WAVEFORM MONITOR	LINE IN COLOR BAR (NTSC 75%) (PAL 100%)	VR207 (Y LEV)

Step 1. MACHINE CONDITION	The following adjustments should be completed before this adjustment is done. Please confirm them. 1) Y NON LINEAR DE-EMPHASIS LEVEL (7-14-N or P) 2) Y NON LINEAR PRE-EMPHASIS LEVEL (7-21-N or P) 3) Y FM DEVIATION (7-26-N or P) 4) Y A/D PEDESTAL VOLTAGE (9-2) 5) Y A/D INPUT GAIN (9-4) 6) VIDEO 2 OUT LEVEL (9-13) 7) OH CHROMA LEVEL (13-1-N or P)

Step 2. [NTSC] 1. VIDEO VR : Push In to PRESET POSITION 2. Adjust VR207 so that the Video Level (V) becomes 0.714 ± 0.007Vp-p.	⊘ VR207 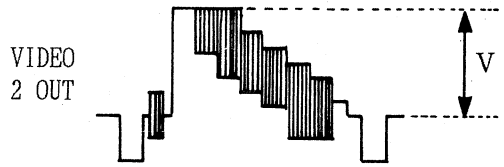 NTSC V = 0.714V
Step 2 [PAL] 1. VIDEO VR : Push In to PRESET POSITION 2. Adjust VR207 so that the Video Level (V) becomes 0.7V ± 0.007Vp-p.	⊘ VR206 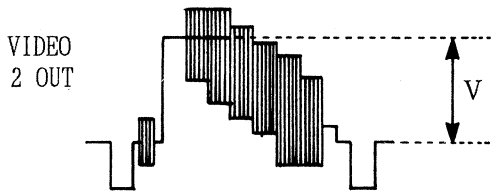 PAL V = 0.7V

13-18. Y/C INPUT Y LEVEL ADJUSTMENT (FINE) (FOR AU-65 NTSC & PAL)

(W4 DEC & CTCM)

TEST POINT	MODE	TAPE USED	M.EQ.	INPUT SIGNAL	ADJUSTMENT
VIDEO 2 OUT	E-E (EJECT)	------	WAVEFORM MONITOR	Y/C IN COLOR BAR (NTSC 75%) (PAL 100%)	VR206 (4P Y LEV)

Step 1. MACHINE CONDITION	The following adjustments should be completed before this adjustment is done. Please confirm them. 1) COMPOSITE Y INPUT LEVEL ADJUSTMENT (3-17) 2) Y NON LINEAR DE-EMPHASIS LEVEL (7-14-N or P) 3) Y NON LINEAR PRE-EMPHASIS LEVEL (7-21-N or P) 4) Y FM DEVIATION (7-26-N or P) 5) Y A/D PEDESTAL VOLTAGE (9-2) 6) Y A/D INPUT GAIN (9-4) 7) VIDEO 2 OUT LEVEL (9-13)
Step 2. 1. VIDEO VR : Push In to PRESET POSITION 2. Adjust VR206 so that the Video Level (V) becomes 0.714 ± 0.007Vp-p. NTSC 0.714V (± 2%) PAL 0.7V (± 2%)	⊘ VR206 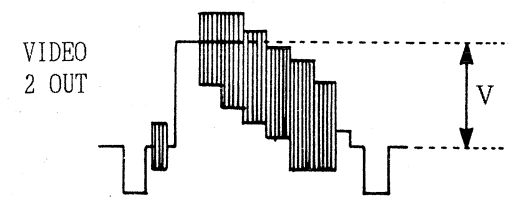 NTSC V = 0.714V (± 2%) PAL V = 0.7V (± 2%)

13-19. COMPONENT INPUT VECTOR ADJUSTMENT (FINE) (FOR AU-65 NTSC & PAL)

(W4 DEC & CTCM)

TEST POINT	MODE	TAPE USED	M.EQ.	INPUT SIGNAL	ADJUSTMENT
VIDEO 2 OUT	E-E (EJECT)	------	VECTOR SCOPE	COMPONENT COLOR BAR (NTSC 75%) (PAL 100%)	VR502 (Pb LEV 2)

Step 1.

MACHINE CONDITION

The following adjustments should be completed before this adjustment is done.

1) C DEVIATION CONFIRMATION (7-34-N or P)
2) VIDEO OUTPUT VECTOR (9-17)

Step 2. [NTSC]

1. Adjust VR502 so that the each Vector is within its inner box on the Vector scope. (2%)

VIDEO 2 OUT

⊘ VR502

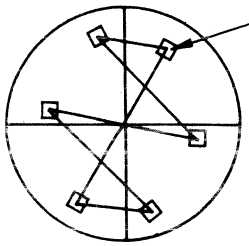

[NTSC] 75%

Step 2. [PAL]

1. Connect the vector scope to signal generator, and set the vector scope the burst level 100%.
2. Reconnect the vector scope to VIDEO 2 OUT on the Rear Panel.
1. Adjust VR502 so that the each Vector is within its inner box on the Vector scope. (2%)

VIDEO 2 OUT

⊘ VR502

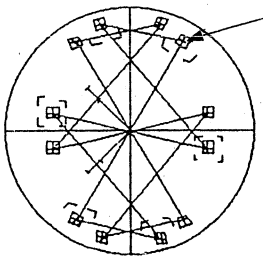

[PAL] 100%

13-20. LINE INPUT VECTOR ADJUSTMENT (FINE) (FOR AU-65 NTSC & PAL)

(W4 DEC & CTCM)

TEST POINT	MODE	TAPE USED	M.EQ.	INPUT SIGNAL	ADJUSTMENT
[NTSC & PAL] VIDEO 2 OUT [PAL] COMPONENT Pb, Pr OUT	E-E (EJECT)	------	[NTSC & PAL] VECTOR SCOPE [PAL] WAVEFORM MONITOR	LINE IN COLOR BAR (NTSC 75%) (PAL 100%)	VR213 (Pb LEV 1) VR215 (Pr LEV 1) VR218 (AXIS PHASE) VC401

Step 1.

MACHINE CONDITION

1. The following adjustments should be completed before this adjustment is done.
   1) C DEVIATION CONFIRMATION (7-34-N or P)
   2) VIDEO OUTPUT VECTOR (9-17)
   3) COMPONENT INPUT VECTOR (13-19)
2. VIDEO VR : Push In to PRESET POSITION

Step 2. [NTSC]

1. Adjust VR213, VR215, VR218 and VC401 so that the each Vector is within its inner box on the Vector Scope. (2%)

VIDEO 2 OUT

⊘ VR213
⊘ VR215
⊘ VR218
⊘ VC401

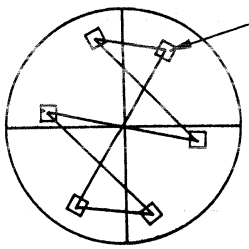

[NTSC] 75%

Step 2. [PAL]

1. Connect the waveform monitor to COMPONENT Pb and Pr OUT.
2. Adjust VR218 and VC401 so that the clouble portion of waveoform is minimum.

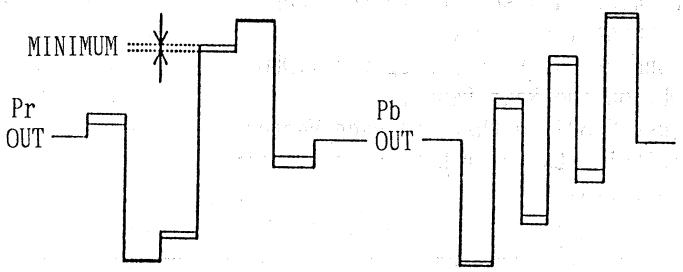

Step 3. [PAL]

1. Connect the vector scope to signal generator, and set the vector scope the burst level 100%.
2. Reconnect the vector scope to VIDEO 2 OUT on the Rear Panel.
3. Adjust VR213 and VR215 so that the each Vector is within its inner box on the Vector Scope. (2%)

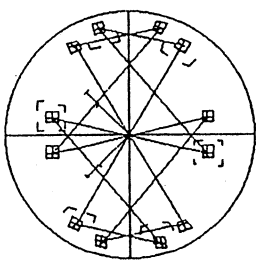

[PAL] 100%

13-21. Y/C INPUT VECTOR ADJUSTMENT (FINE) (FOR AU-65 NTSC & PAL)

(W4 DEC & CTCM)

TEST POINT	MODE	TAPE USED	M.EQ.	INPUT SIGNAL	ADJUSTMENT
VIDEO 2 OUT	E-E (EJECT)	------	VECTOR SCOPE	Y/C IN COLOR BAR (NTSC 75%) (PAL 100%)	VR201 (4P C LEV)

Step 1.

MACHINE CONDITION

1. The following adjustments should be completed before this adjustment is done.
   1) C DEVIATION CONFIRMATION (7-34-N or P)
   2) VIDEO OUTPUT VECTOR (9-17)
   3) COMPONENT INPUT VECTOR (13-19)
   4) LINE INPUT VECTOR (13-20)

2. INPUT SELECT : Y/C side (on Pull Out Drawer)
3. YC/COMPONENT SELECT : YC side (on Front Sub Panel)

Step 2. [NTSC]

1. Adjust VR201 so that the each vector is within its inner box on the vector scope. (2%)

VIDEO 2 OUT

⊘ VR201

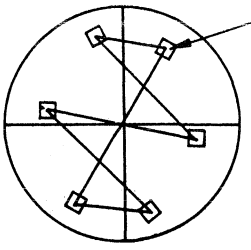

[NTSC]

Step 2. [PAL]

1. Connect the vector scope to signal generator, and set the vector scope the burst level 100%.
2. Reconnect the vector scope to VIDEO 2 OUT on the Rear Panel.
3. Adjust VR201 so that the each vector is within its inner box on the vector scope. (2%)

VIDEO 2 OUT

⊘ VR201

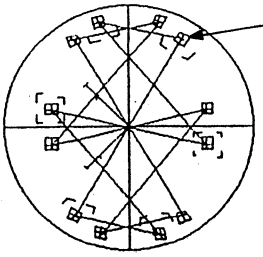

[PAL]

13-22-N(A). SCH ADJUSTMENT (BY USING AU-665)
(FOR AU-65 NTSC)

(W4 DEC & CTCM)

TEST POINT	MODE	TAPE USED	M.EQ.	INPUT SIGNAL	ADJUSTMENT
TP404	E-E (EJECT)	------	SCH METER (TEK 1750)	LINE IN COMPOSITE SIGNAL FROM AU-665	VR401 (SCH -) VR402 (SCH +)

Step 1.

CONNECTION METHOD

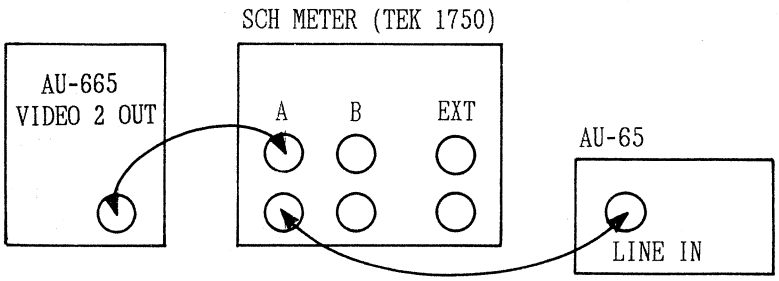

Step 2.

1. STD/NSTD SELECT : STD
   (on Set Up Menu & Front Sub Panel)
2. SCH METER : SCH Mode
   (TEK 1750)
3. Adjust the SCH Phase VR of AU-665 so that the SCH phase becomes -70° at SCH Meter.
4. SCOPE : TP404
5. Confirm the DC voltage can be changed (H ⟷ L) by turning VR401.
6. VR401 : Fully Counterclockwise
7. Adjust VR401 so that the DC Level just becomes 1st Max. POINT at TP404.

Note:
There are 2 adjustment points. Adjust VR401 so that the DC Level comes up to the first high level point from full counterclockwise position.

8. Adjust VR401 so that the DC Level just becomes High level at TP404.

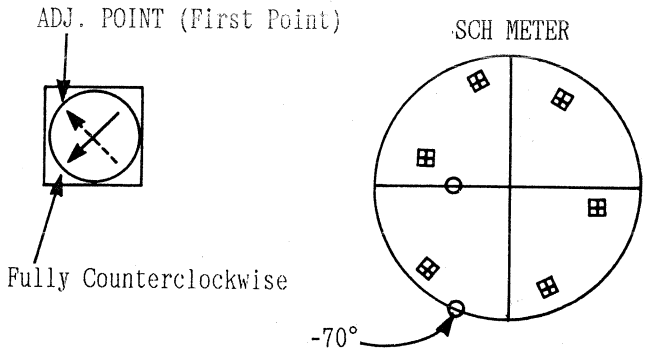

Step 3.

1. Adjust the SCH Phase VR of AU-665 so that the SCH phase becomes +70° at SCH Meter.
2. VR402 : Fully Counterclockwise
3. Adjust VR402 so that the DC Level just becomes High Level at TP404.

Note:
There are 2 adjustment points. Adjust VR402 so the DC Level comes up to the first high level point from full counterclockwise position.

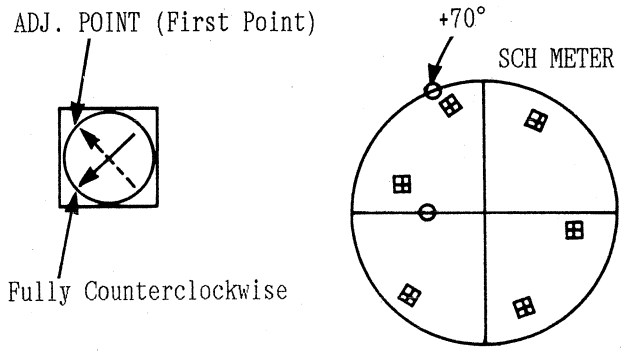

13-22-N(B). SCH ADJUSTMENT (BY USING AU-65) (FOR AU-65 NTSC)

(W4 DEC & CTCM)

TEST POINT	MODE	TAPE USED	M.EQ.	INPUT SIGNAL	ADJUSTMENT
IC402 (4) IC403 (9) IC404 (6)	E-E (EJECT)	-------	SCH METER OSCILLOSCOPE	LINE IN (SCH 0°)	VR401 (SCH -) VR402 (SCH +)

Step 1.

CONNECTION METHOD

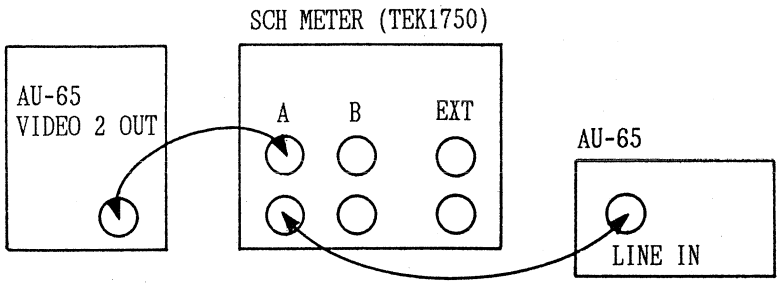

Step 2.

1. STD/NSTD SELECT : STD (on Set Up Menu & Front Sub Panel)
2. SCH METER (TEK 1750)
3. Adjust the SCH Phase VR of AU-65 so that the SCH phase becomes 0° at SCH Meter.
4. Connect the scope 9 pin of IC403, 3 pin and 6 pin of IC404.
5. Adjust VR401 and VR402 so that pulse timing is as shown in figure.

Note:
The pulse of 9 pin of IC403 is burst SC. Therefore pulse phase is inverted each feild.

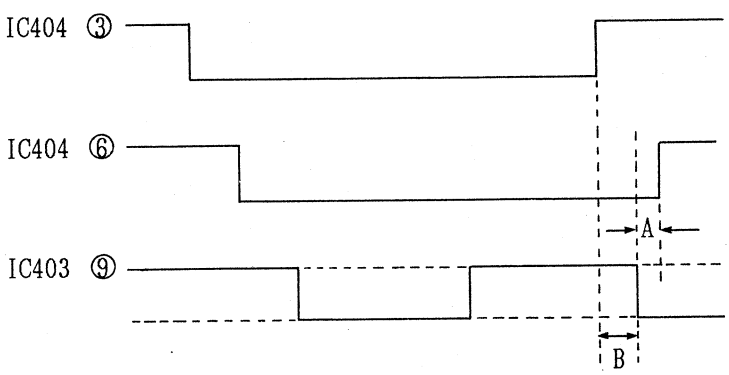

A = 12 ± 2 nsec.
B = 24 ± 2 nsec.
(Trigger IC403 - 9)

13-22-P. SCH ADJUSTMENT (FOR AU-65 PAL)

(W4 DEC & CTCM)

TEST POINT	MODE	TAPE USED	M.EQ.	INPUT SIGNAL	ADJUSTMENT
TP401 TP402	E-E (EJECT)	-------	SCH METER (TEK 1751) OSCILLOSCOPE	LINE IN COMPOSITE SIGNAL (SCH 0°)	VR401 (SCH -)

Step 1.

CONNECTION METHOD

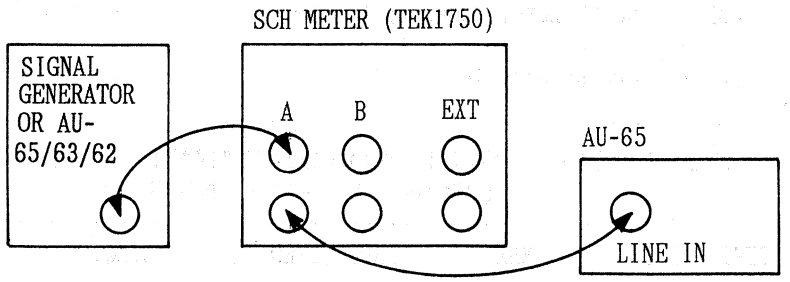

Step 2.

1. STD/NSTD SELECT : STD
   (on Set Up Menu & Front Sub Panel)
2. SCH METER (METER 1751) : SCH Mode
3. Adjust SIGNAL GEN or another MII VTR so that the SCH phase becomes ± 0°.
4. Connect the oscilloscope to TP401 and TP402.
5. Adjust VR401 so that the (A) equal (B) as shown in figure.

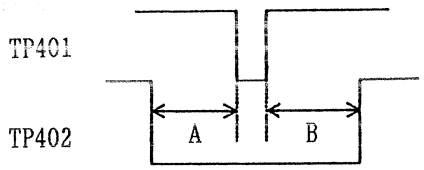

A = B ± 0.5 msec

13-23. VISC PHASE ADJUSTMENT (FOR AU-65 NTSC & PAL)

(W4 DEC & CTCM)

TEST POINT	MODE	TAPE USED	M.EQ.	INPUT SIGNAL	ADJUSTMENT
VIDEO 2 OUT	E-E (EJECT)	------	SCH METER (VECTOR Mode)	LINE IN COLOR BAR (with VITS Signal that have Pb axis SC)	VR11 (VSC ⊘)

Step 1.

MACHINE CONDITION

1. TBC & SYNC GEN (W1) Adjustment should be completed.
2. ENCODER (W2) Adjustment should be completed.
3. SW7 (on W1) : OFF
4. STD/NSTD SELECT : STD
   (Set-up Menu No. 1011 → 00 FRONT SWITCH)
   (Input Signal is standard from signal generator)

Step 2. [NTSC]

1. VECTOR SCOPE : VIDEO 2 OUT
2. Confirm that the VISC signal phase is same as VIR signal phase as shown in figure. (± 2°)
3. If it is not, readjust VR11 so that the each phase becomes same phase.
4. SW7 (on W1) : ON

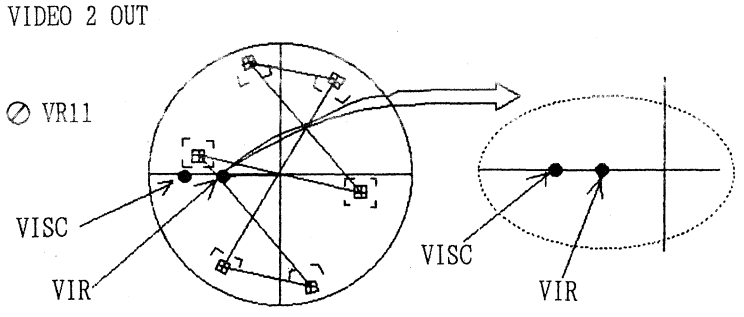

VISC PHASE & VIR PHASE should be the same

Step 2. [PAL]

1. VECTOR SCOPE : VIDEO 2 OUT
2. Confirm that the VISC signal phase is same as VITS (Pb axis Sub Carrier) signal phase as shwon in figure. (± 2°)
3. If it is not, readjust VR11 so that the each phase becomes same phase.
4. SW7 (on W1) : ON

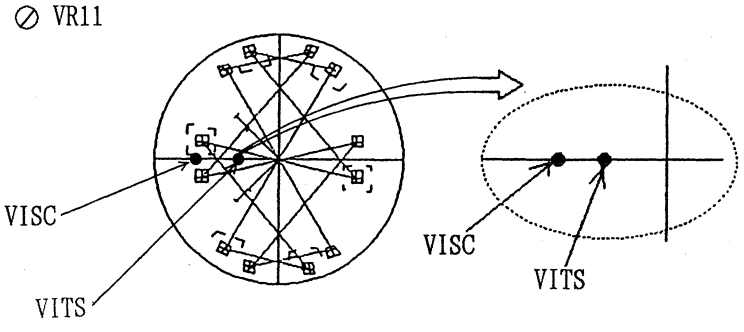

VISC PHASE & VITS PHASE should be the same

13-24. 13.5 MHz PLL ADJUSTMENT (1)
(FOR AU-65 NTSC & PAL)

(W4 DEC & CTCM)

TEST POINT	MODE	TAPE USED	M.EQ.	INPUT SIGNAL	ADJUSTMENT
VIDEO 2 OUT	E-E (EJECT)	------	VECTOR SCOPE	LINE IN COLOR BAR (with VITS Signal that have Pb axis SC)	VR701 (SYNC ϕ)

Step 1.

MACHINE CONDITION

1. TBC & SYNC GEN (W1) Adjustment should be completed before this adjustment is done.
2. ENCODER (W2) Adjustment should be completed. before this adjustment is done.
3. STD/NSTD SELECT : NSTD
   (Set-up Menu No. 1011 → 01 NON-STD)
4. SW7 (on W1) : OFF

Step 2. [NTSC]

1. VECTOR SCOPE : VIDEO 2 OUT
2. Confirm that the VIR Phase is
   NTSC : VIR phase = phase
3. If it is not, adjust VR701 so that the Burst Phase is the same as VIR Phase (Phase Difference = 0 ± 2°).
4. SW7 (on W1) : ON

VIDEO 2 OUT

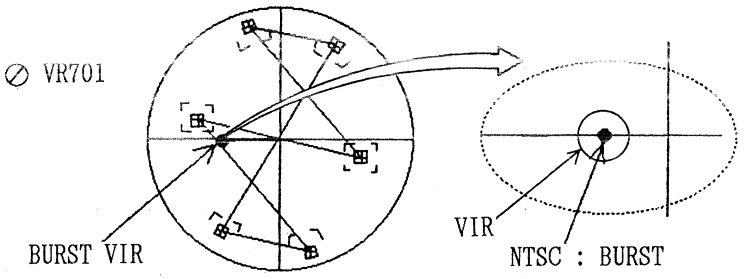

[NTSC]

Step 2. [PAL]

1. VECTOR SCOPE : VIDEO 2 OUT
2. Set the vector scope burst, level 100% and burst phase on the burst line of the vector scope.
3. Confirm that the VITS (Pb axis Sub Carrier) Phase is
   PAL : VITS Phase = U axis
4. If it is not, adjust VR701 so that the VITS Phase is on U axis.
   (Phase Difference = 0 ± 2°)
5. SW7 (on W1) : ON

VIDEO 2 OUT

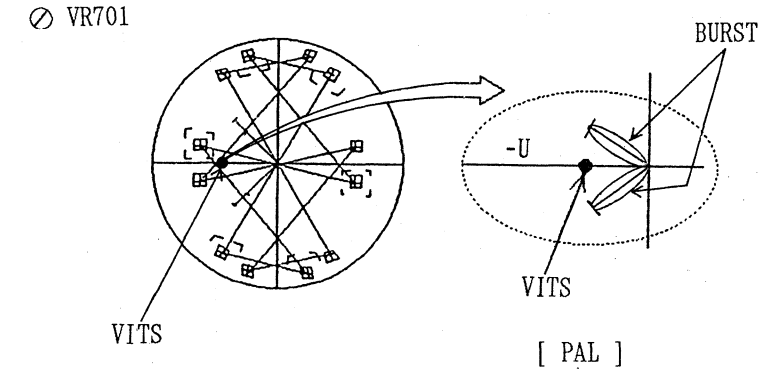

[PAL]

13-25. 13.5 MHz PLL ADJUSTMENT (2)
(FOR AU-65 NTSC & PAL)

(W4 DEC & CTCM)

TEST POINT	MODE	TAPE USED	M.EQ.	INPUT SIGNAL	ADJUSTMENT
VIDEO 2 OUT	E-E (EJECT)	------	VECTOR SCOPE	LINE IN COLOR BAR (with VITS Signal that have Pb axis SC)	VR703 (PLL POS 2)

Step 1.

MACHINE CONDITION

1. TBC & SYNC GEN (W1) Adjustment should be completed before this adjustment is done.
2. ENCODER (W2) Adjustment should be completed before this adjustment is done.
3. STD/NSTD SELECT : STD
   (Set-up Menu No. 1101 → 00 FRONT SWITCH)
   (Input signal is standard from signal generator)
4. SW7 (on W1) : OFF

Step 2. [NTSC]

1. VECTOR SCOPE : VIDEO 2 OUT
2. Confirm that the VIR Phase is
   NTSC : VIR phase = Burst phase
   PAL : VIR phase = -U axis
3. If it is not, adjust VR703 so that the Burst Phase is the same as VIR Phase (Phase Difference = 0 ± 2°).
4. SW7 (on W1) : ON

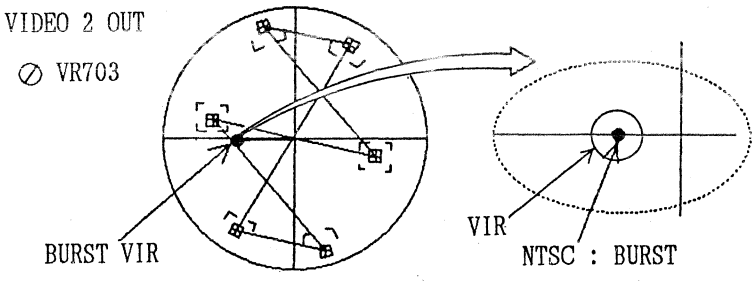

[NTSC]

Step 2. [PAL]

1. VECTOR SCOPE : VIDEO 2 OUT
2. Set the vector scope, burst level 100% and burst phase on the burst line of the vector scope.
3. Confirm that the VITS (Pb axis sub Carrier) Phase is
   PAL : VITS Phase = - U axis
4. If it is not, adjust VR703 so that the VITS is on U axis.
   (Phase Difference = 0 ± 2°)
5. SW7 (on W1) : ON

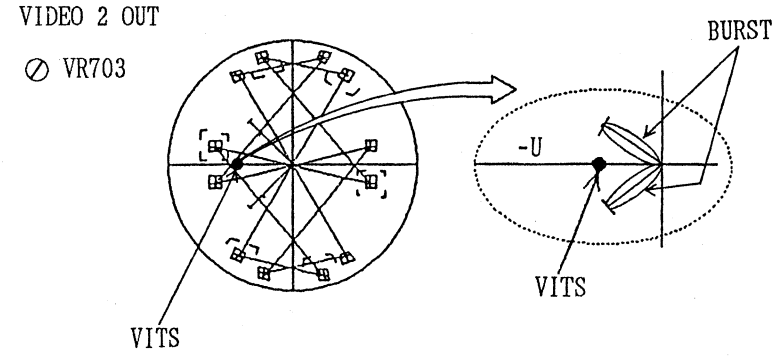

[PAL]

13-26. 13.5 MHz PLL ADJUSTMENT (3)
(FOR AU-65 NTSC & PAL)

(W4 DEC & CTCM)

TEST POINT	MODE	TAPE USED	M.EQ.	INPUT SIGNAL	ADJUSTMENT
TP703	E-E (EJECT)	------	OSCILLOSCOPE	LINE IN COLOR BAR	VR702 (PLL POS 1)

Step 1. MACHINE CONDITION	1. TBC & SYNC GEN (W1) Adjustment should be completed before this adjustment is done. 2. ENCODER (W2) Adjustment should be completed before this adjustment is done. 3. STD/NSTD SELECT : STD (Set-up Menu No. 1011 → 00 FRONT SWITCH) (Input Signal is standard from Signal generator)
Step 2. 1. SCOPE : TP703 2. Trigger the scope with the composite sync out of the signal generator. 3. Memorize the sync position in STD mode. 4. STD/NSTD SELECT : NSTD (Set-up Menu No. 1011 → 01 NON-STD) 5. Confirm that the sync position of NSTD mode is same as STD mode. 6. If it is not, adjust VR702 so that the NSTD sync position is same as STD sync position. 7. After adjustment SW800 (W2) set "ON" mode.	TP703 ⊘ VR702 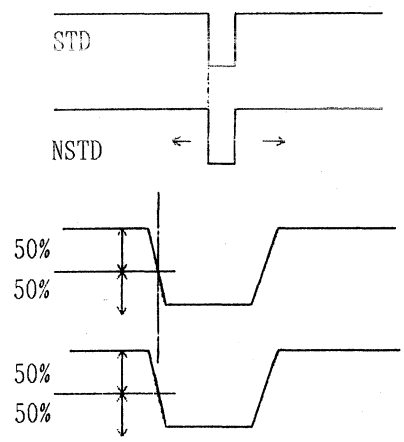

14. AUDIO (W6) BOARD (2/2)

FM AUDIO SECTION (W6) FLOWCHART FOR AU-65

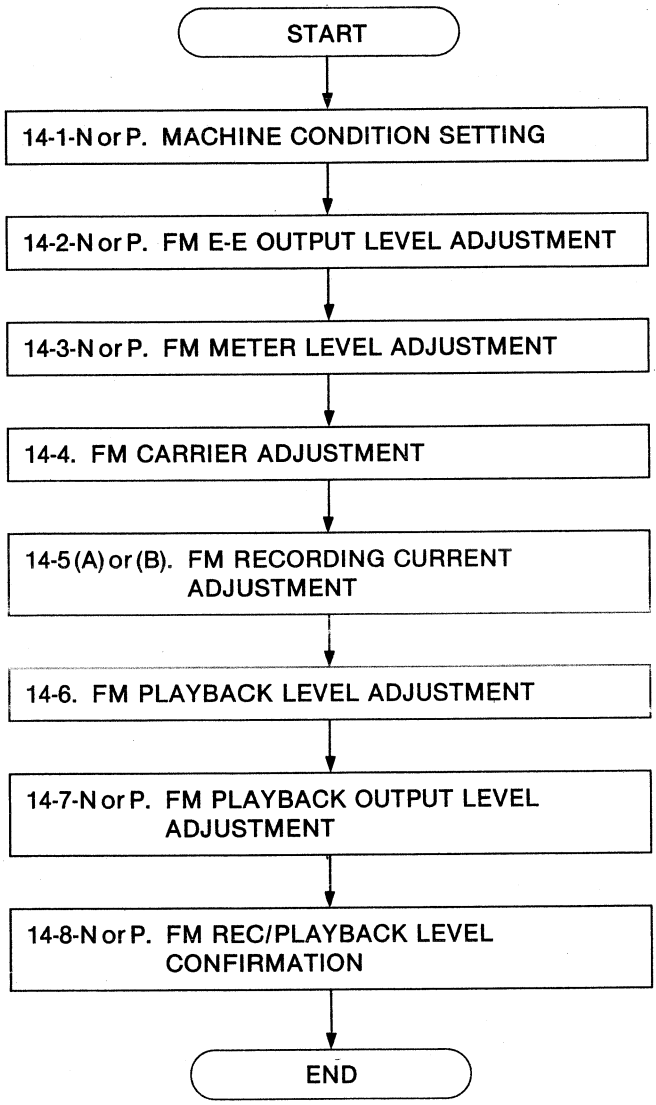

FM AUDIO SECTION (W6) FLOWCHART FOR AU-63 AND AU-62

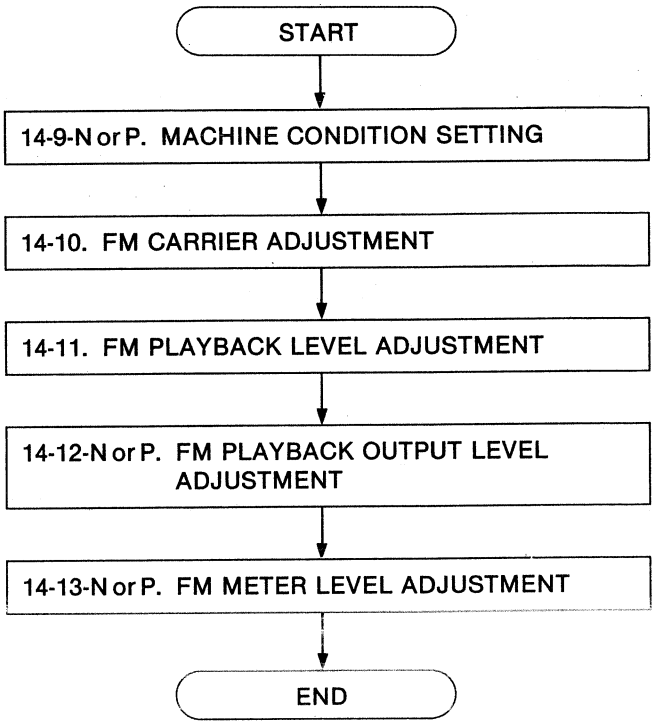

14. AUDIO (W6) BOARD (2/2)
— FM AUDIO SECTION —

14-1-N. MACHINE CONDITION SETTING (FOR AU-65 NTSC FM AUDIO)

Set the switches on the Front Panel as shown except certain steps for NTSC VTR (See Machine Condition).

PB VR	PRESET side
METER SELECT	FM
MODE	E-E
INPUT LEVEL SELECT (on the Audio I/O Board)	+4dBm
OUTPUT LEVEL SELECT (on the Audio I/O Board)	+4dBm

14-1-P. MACHINE CONDITION SETTING (FOR AU-65 PAL FM AUDIO)

Set the switches on the Front Panel as shown except certain steps for PAL VTR (See Machine Condition).

PB VR	PRESET side
METER SELECT	FM
MODE	E-E
INPUT LEVEL SELECT (on the Audio I/O Board)	+0dBu
OUTPUT LEVEL SELECT (on the Audio I/O Board)	+0dBu

14-2-N. FM E-E OUTPUT LEVEL ADJUSTMENT (FOR AU-65 NTSC)

(W6 AUDIO)

TEST POINT	MODE	TAPE USED	M.EQ.	INPUT SIGNAL	ADJUSTMENT
CH3 LINE OUT CH4 LINE OUT	EJECT	-------	VTVM	1KHz Sinewave Signal +4dBm	VR701 (CH3 EE) VR801 (CH4 EE)
Step 1. MACHINE CONDITION			Refer to Set Up Conditions at the beginning of this SECTION (AUDIO - W6 Machine Condition 14-1-N).		
Step 2. VTVM : CH3 LINE OUT CH4 LINE OUT			SPECIFICATION : +4dBm ± 0.2dB		

14-2-P. FM E-E OUTPUT LEVEL ADJUSTMENT (FOR AU-65 PAL)

(W6 AUDIO)

TEST POINT	MODE	TAPE USED	M.EQ.	INPUT SIGNAL	ADJUSTMENT
CH3 LINE OUT CH4 LINE OUT	EJECT	-------	VTVM	1KHz Sinewave Signal +0dBu	VR701 (CH3 EE) VR801 (CH4 EE)
Step 1. MACHINE CONDITION			Refer to Set Up Conditions at the beginning of this SECTION (AUDIO - W6 Machine Condition 14-1-P).		
Step 2. VTVM : CH3 LINE OUT CH4 LINE OUT			SPECIFICATION : +0dBu ± 0.2dB		

14-3-N. FM METER LEVEL ADJUSTMENT (FOR AU-65 NTSC)

(FRONT I/F BOARD)

TEST POINT	MODE	TAPE USED	M.EQ.	INPUT SIGNAL	ADJUSTMENT
CH3 METER CH4 METER	EJECT	-------	-------	1KHz Sinewave Signal +4dBm	VR103 (CH3 METER) on Front Interface Board VR104 (CH4 METER) on Front Interface Board
Step 1. MACHINE CONDITION			Refer to Set Up Conditions at the beginning of this SECTION (AUDIO - W6 Machine Condition 14-1-N).		
Step 2. 1. Adjust VR103 (CH1) and VR104 (CH3) on the Front Interface Board so that the meter indicates "0" VU as shown.			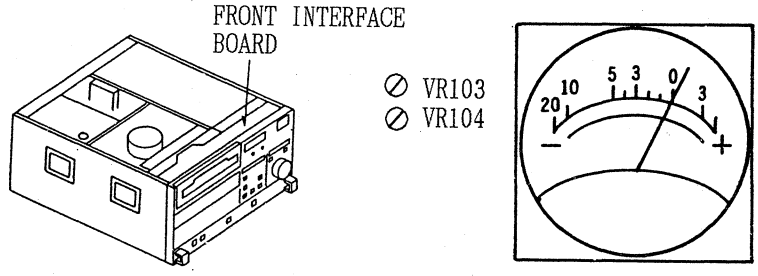		

14-3-P. FM METER LEVEL ADJUSTMENT (FOR AU-65 PAL)

(FRONT I/F BOARD)

TEST POINT	MODE	TAPE USED	M.EQ.	INPUT SIGNAL	ADJUSTMENT
CH3 METER CH4 METER	EJECT	-------	-------	1KHz Sinewave Signal 0dBu	VR103 (CH3 METER) on Front Interface Board VR104 (CH4 METER) on Front Interface Board
Step 1. MACHINE CONDITION			Refer to Set Up Conditions at the beginning of this SECTION (AUDIO - W6 Machine Condition 14-1-P).		
Step 2. 1. Adjust VR103 (CH1) and VR104 (CH3) on the Front Interface Board so that the meter indicates "-4" VU as shown.			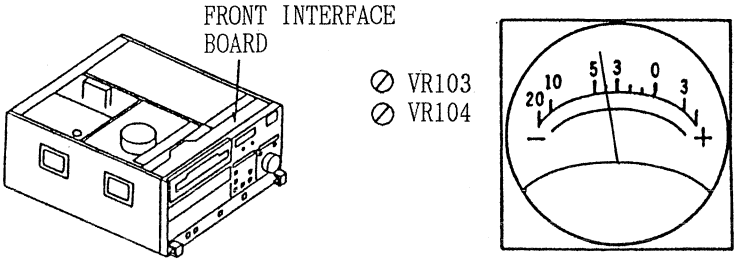		

14-4. FM CARRIER ADJUSTMENT (FOR AU-65 NTSC & PAL)

(W6 AUDIO)

TEST POINT	MODE	TAPE USED	M.EQ.	INPUT SIGNAL	ADJUSTMENT
TP704 (CH3) TP804 (CH4)	EJECT	-------	FREQUENCY COUNTER	----------	VR704 (CH3 FO) VR804 (CH4 FO)
Step 1. MACHINE CONDITION			Refer to Set Up Conditions at the beginning of this SECTION (AUDIO - W6 Machine Condition 14-1-N or 14-1-P).		
Step 2. Frequency Counter : TP704 (CH3) TP804 (CH4)			SPECIFICATION : TP704 = 400KHz ± 1KHz TP804 = 700KHz ± 1KHz		

14-5(A). FM RECORDING CURRENT ADJUSTMENT (BY USING SPECTRUM ANALYZER) (FOR AU-65 NTSC & PAL)

(W6 AUDIO)

TEST POINT	MODE	TAPE USED	M.EQ.	INPUT SIGNAL	ADJUSTMENT
TP2 on RA & HA P. C. Board	EJECT	-------	SPECTRUM ANALYZER	COMPOSITE 50% FLAT FIELD TO LINE INPUT	VR901 (FM CURR.)

Step 1. MACHINE CONDITION	1. Refer to Set Up Conditions at the beginning of this SECTION (AUDIO - W6 Machine Condition 14-1-N or 14-1-P). 2. The Video Head must be degaussed with a magnetic eraser. 3. The C REC CURRENT ADJ. (12-13-N or 12-13-P and 12-14-N or 12-14-P) should be completed.
Step 2. 1. ANALYZER : TP2 (on RA & HA P.C.B.) 2. Adjust VR901 so that the FM Carrier Level is -27dB ± 0.5dB against the chroma carrier level as shown.	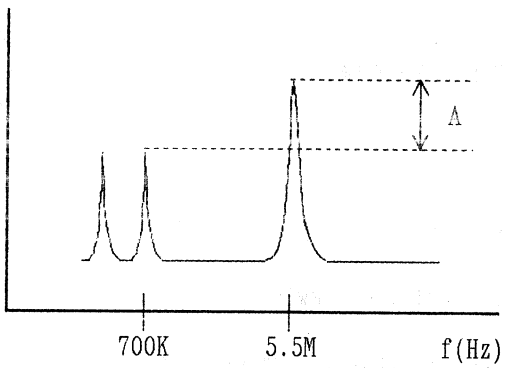 A = -27dB ± 0.5dB

14-5(B). FM RECORDING CURRENT ADJUSTMENT (BY USING OSCILLOSCOPE) (FOR AU-65 NTSC & PAL)

TEST POINT	MODE	TAPE USED	M.EQ.	INPUT SIGNAL	ADJUSTMENT
TP2 on RA & HA P. C. Board	EJECT	-------	OSCILLOSCOPE	COMPOSITE 50% FLAT FIELD TO LINE INPUT	VR901 (FM CURR.)

Step 1. MACHINE CONDITION	1. Refer to Set Up Conditions at the beginning of this SECTION (AUDIO - W6 Machine Condition 14-1-N or 14-1-P). 2. The Video Head must be degaussed with a magnetic eraser. 3. The C REC CURRENT ADJ. (12-13-N or 12-13-P and 12-14-N or 12-14-P) should be completed.
Step 2. SCOPE CONDITION	VOLTS/DIV. = 50mV or 20mV TIME /DIV. = 20nsec BAND FILTER = OFF
Step 3. SCOPE : TP2 (on RA & HA P.C.B.) 1. VR901 : Fully Clockwise 2. Adjust VR901 so that the FM Carrier (A) level becomes 35mV ± 5mVp-p as shown.	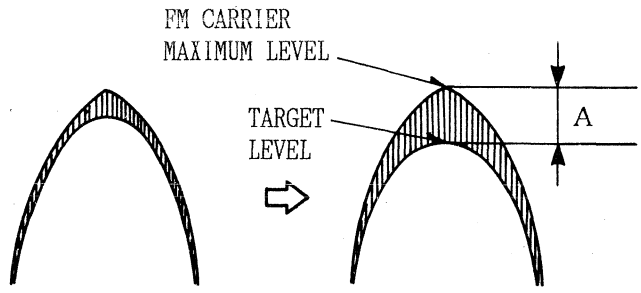 A = 35 ± 5mVp-p

14-6. FM PLAYBACK LEVEL ADJUSTMENT (FOR AU-65 NTSC & PAL)

(W6 AUDIO)

TEST POINT	MODE	TAPE USED	M.EQ.	INPUT SIGNAL	ADJUSTMENT
TP702 TP802	PLAY	ALIGNMENT TAPE 1KHz 0VU PORTION	VTVM	----------	VR703 (CH3 PB) VR803 (CH4 PB)
Step 1. MACHINE CONDITION VTVM CONDITION			Refer to Set Up Conditions at the beginning of this SECTION (AUDIO - W6 Machine Condition 14-1-N or 14-1-P). FILTER : 20KHz L.P.F. (DIN AUDIO)		
Step 2. 1. Play back the 1KHz 0VU portion of the Alignment Tape. 2. Adjust VR703 and VR803 so that the TP702 and TP802 becomes -16dB ± 0.2dB.			⊘ VR703 VR803 SPECIFICATION : -16dB ± 0.2dB		

14-7-N. FM PLAYBACK OUTPUT LEVEL ADJUSTMENT (FOR AU-65 NTSC)

(FRONT I/F BOARD)

TEST POINT	MODE	TAPE USED	M.EQ.	INPUT SIGNAL	ADJUSTMENT
CH3 LINE OUT CH4 LINE OUT	PLAY	ALIGNMENT TAPE	VTVM	----------	VR12 (CH3 PB LEVEL) (on Front I/F Board) VR13 (CH4 PB LEVEL) (on Front I/F Board)
Step 1. MACHINE CONDITION			1. Refer to Set Up Conditions at the beginning of this SECTION (AUDIO - W6 Machine Condition 14-1-N). 2. FM AUDIO PB LEVEL SW (CH3 & CH4) : PRESET (on Front Interface Board)		
Step 2. 1. Play back the 1KHz 0VU portion of the Alignment Tape. 2. Adjust VR12 and VR13 so that the CH3 and CH4 PB LEVEL is +4dBm ± 0.2dB.			⊘ VR 12/13 (on Front I/F Board) SPECIFICATION : +4dBm ± 0.2dB		

14-7-P. FM PLAYBACK OUTPUT LEVEL ADJUSTMENT (FOR AU-65 PAL)

(FRONT I/F BOARD)

TEST POINT	MODE	TAPE USED	M.EQ.	INPUT SIGNAL	ADJUSTMENT
CH3 LINE OUT CH4 LINE OUT	PLAY	ALIGNMENT TAPE	VTVM	----------	VR12 (CH3 PB LEVEL) (on Front I/F Board) VR13 (CH4 PB LEVEL) (on Front I/F Board)
Step 1. MACHINE CONDITION			1. Refer to Set Up Conditions at the beginning of this SECTION (AUDIO - W6 Machine Condition 14-1-P). 2. FM AUDIO PB LEVEL SW (CH3 & CH4) : PRESET (on Front Interface Board)		
Step 2. 1. Play back the 1KHz 0VU portion of the Alignment Tape. 2. Adjust VR12 and VR13 so that the CH3 and CH4 PB LEVEL is +0dBu ± 0.2dB.			∅ VR 12/13 (on Front I/F Board) SPECIFICATION : +0dBu ± 0.2dB		

14-8-N. FM REC/PLAYBACK LEVEL CONFIRMATION (FOR AU-65 NTSC)

(W6 AUDIO)

TEST POINT	MODE	TAPE USED	M.EQ.	INPUT SIGNAL	ADJUSTMENT
CH3 LINE OUT CH4 LINE OUT	SELF REC/PLAY	BLANK TAPE	VTVM	1KHz Sinewave Signal +4dBm	VR705 (CH3 DEV.) VR805 (CH4 DEV.)
Step 1. MACHINE CONDITION			Refer to Set Up Conditions at the beginning of this SECTION (AUDIO - W6 Machine Condition 14-1-N).		
Step 2. 1. Make a recording for a few minutes. 2. Play back the just recorded portion. 3. Confirm that the Line Output Level is +4dBm ± 0.2dB. 4. If it is not, adjust VR705 and VR805 and repeat from Item 1 to Item 3 until the output level becomes +4dBm ± 0.2dB.			SPECIFICATION : +4dBm ± 0.2dB		

14-8-P. FM REC/PLAYBACK LEVEL CONFIRMATION (FOR AU-65 PAL)

(W6 AUDIO)

TEST POINT	MODE	TAPE USED	M.EQ.	INPUT SIGNAL	ADJUSTMENT
CH3 LINE OUT CH4 LINE OUT	SELF REC/PLAY	BLANK TAPE	VTVM	1KHz Sinewave Signal +0dBu	VR705 (CH3 DEV.) VR805 (CH4 DEV.)
Step 1. MACHINE CONDITION			Refer to Set Up Conditions at the beginning of this SECTION (AUDIO - W6 Machine Condition 14-1-P).		
Step 2. 1. Make a recording for a few minutes. 2. Play back the just recorded portion. 3. Confirm that the Line Output Level is +0dBu ± 0.2dB. 4. If it is not, adjust VR705 and VR805 and repeat from Item 1 to Item 3 until the output level becomes +0dBu ± 0.2dB.			SPECIFICATION : +0dBu ± 0.2dB		

14-9-N. MACHINE CONDITION SETTING (FOR AU-63/62 NTSC FM AUDIO)

Set the switches on the Front Panel as flollows except special condition for NTSC VTR.

PB VR ---------- PRESET side
METER SELECT ---------- FM
OUTPUT LEVEL SELECT (on the Audio I/O Board) ---------- +4dBm

14-9-P. MACHINE CONDITION SETTING (FOR AU-63/62 PAL FM AUDIO)

Set the switches on the Front Panel as flollows except special condition for PAL VTR.

PB VR ---------- PRESET side
METER SELECT ---------- FM
OUTPUT LEVEL SELECT (on the Audio I/O Board) ---------- +0dBu

14-10. FM CARRIER ADJUSTMENT (FOR AU-62/63) (FOR AU-62/63 PAL & NTSC)

(W6 AUDIO)

TEST POINT	MODE	TAPE USED	M.EQ.	INPUT SIGNAL	ADJUSTMENT
TP704 (CH3) TP804 (CH4)	EJECT	-------	FREQUENCY COUNTER	----------	VR704 (CH3 FO) VR804 (CH4 FO)
Step 1. MACHINE CONDITION			1. Refer to Set Up Conditions at 14-9-N or 14-9-P Machine Condition Setting (for AU-62/63). 2. Short a jumper wire between TP902 and TP903.		
Step 2. Frequency Counter : TP704 (CH3) TP804 (CH4)			SPECIFICATION : TP704 = 400KHz ± 1KHz TP804 = 700KHz ± 1KHz		

14-11. FM PLAYBACK LEVEL ADJUSTMENT (FOR AU-62/63 NTSC & PAL)

(W6 AUDIO)

TEST POINT	MODE	TAPE USED	M.EQ.	INPUT SIGNAL	ADJUSTMENT
CH3 TP702 CH4 TP802	PLAY	ALIGNMENT TAPE 1KHz 0VU	VTVM	----------	VR703 (CH3 PB) VR803 (CH4 PB)
Step 1. MACHINE CONDITION			Refer to Set Up Conditions at 14-9-N or 14-9-P Machine Condition Setting (for Au-62/63).		
Step 2. 1. Play back the 1KHz 0VU portion of the Alignment Tape. 2. Adjust VR703 and VR803 so that the Line output level becomes -16dB ± 0.2dB.			ⓥ VR703 VR803 SPECIFICATION : -16dB ± 0.2dB		

14-12-N. FM PLAYBACK OUTPUT LEVEL ADJUSTMENT (FOR AU-62/63 NTSC)

(W6 AUDIO)

TEST POINT	MODE	TAPE USED	M.EQ.	INPUT SIGNAL	ADJUSTMENT
CH3 LINE OUT CH4 LINE OUT	PLAY	ALIGNMENT TAPE 1KHz 0VU	VTVM	----------	VR12 (CH3 PB LEVEL) (on Front I/F Board) VR13 (CH4 PB LEVEL) (on Front I/F Board)
Step 1. MACHINE CONDITION			1. Refer to Set Up Conditions at 14-9-N Machine Condition Setting (for AU-62/63). 2. FM AUDIO PB LEVEL SW (CH3 & CH4) : PRESET (on Front Interface Board)		
Step 2. 2. Play back the 1KHz 0VU portion of the Alignment Tape. 3. Adjust VR12 and VR13 so that the CH3 and CH4 PB LEVEL is +4dBm ± 0.2dB.			ⓥ VR 12 (on Front I/F Board) ⓥ VR 13 SPECIFICATION : +4dBm ± 0.2dB		

14-12-P. FM PLAYBACK OUTPUT LEVEL ADJUSTMENT (FOR AU-62/63 PAL)

(W6 AUDIO)

TEST POINT	MODE	TAPE USED	M.EQ.	INPUT SIGNAL	ADJUSTMENT
CH3 LINE OUT CH4 LINE OUT	PLAY	ALIGNMENT TAPE 1KHz 0VU	VTVM	----------	VR12 (CH3 PB LEVEL) (on Front I/F Board) VR13 (CH4 PB LEVEL) (on Front I/F Board)

Step 1. MACHINE CONDITION	1. Refer to Set Up Conditions at 14-9-P Machine Condition Setting (for AU-62/63). 2. FM AUDIO PB LEVEL SW (CH3 & CH4) : PRESET (on Front Interface Board)
Step 2. 2. Play back the 1KHz 0VU portion of the Alignment Tape. 3. Adjust VR12 and VR13 so that the CH3 and CH4 PB LEVEL is +0dBu ± 0.2dB.	⊘ VR 12 (on Front I/F Board) ⊘ VR 13 SPECIFICATION : +0dBu ± 0.2dB

14-13-N. FM METER LEVEL ADJUSTMENT (FOR AU-62/63 NTSC)

(W6 AUDIO)

TEST POINT	MODE	TAPE USED	M.EQ.	INPUT SIGNAL	ADJUSTMENT
CH3 METER CH4 METER	EJECT	-------	-------	1KHz Sinewave Signal +4dBm	VR103 (CH3 METER) on Front Interface Board VR104 (CH4 METER) on Front Interface Board

Step 1. MACHINE CONDITION	Refer to Set Up Conditions at 14-9-N Machine Condition Setting (for AU-62/63).
Step 2. 1. Adjust VR103 (CH1) and VR104 (CH3) on the Front Interface Board so that the meter indicates "0" VU as shown in figure.	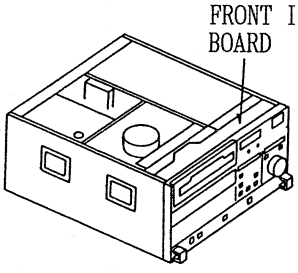 ⊘ VR103 ⊘ VR104 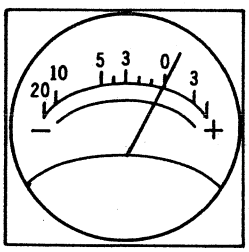

14-13-P. FM METER LEVEL ADJUSTMENT (FOR AU-62/63 PAL)

(W6 AUDIO)

TEST POINT	MODE	TAPE USED	M.EQ.	INPUT SIGNAL	ADJUSTMENT
CH3 METER CH4 METER	EJECT	-------	-------	1KHz Sinewave Signal +0dBu	VR103 (CH3 METER) on Front Interface Board VR104 (CH4 METER) on Front Interface Board

Step 1. MACHINE CONDITION	Refer to Set up Conditions at 14-9-P Machine Condition Setting (for AU-62/63).
Step 2. 1. Adjust VR103 (CH1) and VR104 (CH3) on the Front Interface Board so that the meter indicates "-4" VU as shown in figure.	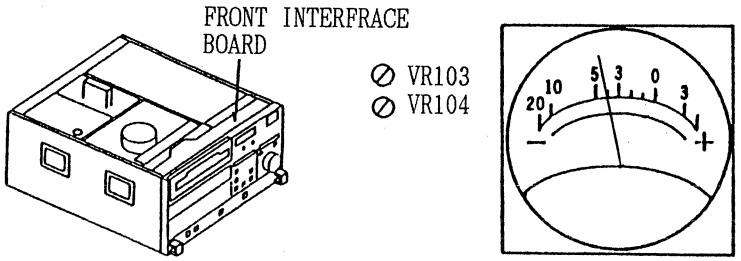

15. FRONT PANEL

15-1. ALARM OSC & LEVEL ADJUSTMENT (NTSC & PAL)

(FRONT PANEL C)

TEST POINT	MODE	TAPE USED	M.EQ.	INPUT SIGNAL	ADJUSTMENT
TP14 TP15	EJECT		OSCILLOSCOPE	----------	VR 1 (ALARM OSC) VR 2 (ALARM LEVEL)

Step 1.
MACHINE CONDITION

SW4 - 8 : ON
VR2 : Fully CCW

Step 2.

Adjust VR1 so that the period A is 250μsec. ($\pm$10μsec.) as shown in figure.

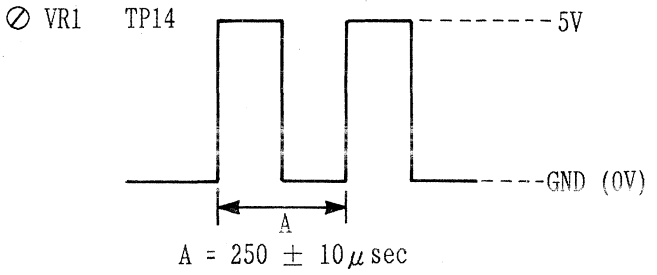

Step 3.

Confirm that the voltage level is from 4.5V to 4.7V as shown in figure.

Step 4.

Set VR2 fully CW and confirm that the voltage level is from 2.5V to 2.7V as shown in figure.

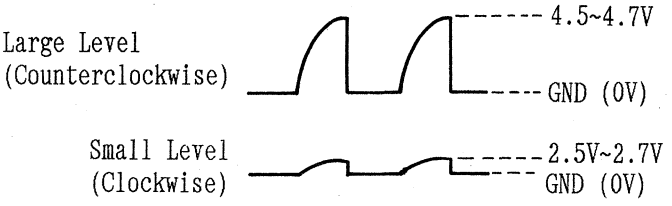

Step 5.

Reset SW4-8 to OFF and reset VR2 fully CCW to set the maximum audio level.

16. AU-F65 (OPTION TCG/TCR)

16-1. TRIMMER ADJUSTMENT (NTSC & PAL) (AU-F65 TCG/TCR)

TEST POINT	MODE	TAPE USED	M.EQ.	INPUT SIGNAL	ADJUSTMENT
TP 6	EJECT	-------	FREQUENCY COUNTER	----------	C19

1. Confirm that the frequency at TP6 is 512.000 ± 0.002Hz. 2. If it is not specification, adjust C19 as mentioned above.	TP6 : 512.000 ± 0.002Hz

PARTS LIST

- Electrical Parts List
- Exploded View
- Mechanical Parts List

This section provides the exploded views, mechanical parts lists and electrical parts lists.

Panasonic

N o t e :

1. *Be sure to make your orders of replacement parts according to this list.
2. Unless ohterwise specified, all resistors are in OHMS, K = 1,000 OHMS, all capacitors are in MICROFARADS (uF), P = uuF.
3. The P.C.Board units marked with "■" show below the main assembled parts.
4. The parts marked with E on the exploded view show the electric parts.
5. IMPORTANT SAFETY NOTICE
   Components identified with the mark <!> have the special characteristics for safety. When replacing any of these components, use only the same type.

<< Abbreviations for parts >>

< NAME >	< DESCRIPTIONS >
C.CAPACITOR	: CERAMIC CAPACITOR
C.CAPACITOR CH	: CERAMIC CHIP CAPACITOR
E.CAPACITOR	: ELECTROLYTIC CAPACITOR
G.CAPACITOR	: GLASS CAPACITOR
M.CAPACITOR	: MICA CAPACITOR
P.CAPACITOR	: PLASTIC FILM CAPACITOR
S.CAPACITOR	: SEMI-CONDUCTOR CAPACITOR
T.CAPACITOR	: TANTALUM CAPACITOR
TRIMMER	: TRIMMER
C.RESISTOR	: CARBON RESISTOR
F.RESISTOR	: FUSE RESISTOR
M.RESISTOR	: METAL OXSIDE RESISTOR
M.RESISTOR CH	: METAL OXSIDE CHIP RESISTOR
S.RESISTOR	: SOLID RESISTOR
V.RESISTOR	: VARIABLE RESISTOR
W.RESISTOR	: WIRE WOUND RESISTOR
COMBI.TR-R	: TRANSISTOR-RESISTOR COMBINATION PARTS
COMBI.R-R	: RESISTOR-RESISTOR COMBINATION PARTS
COMBI.C-R	: CAPACITOR-RESISTOR COMBINATION PARTS
COMBI.C-R-R	: CAPACITOR-RESISTOR-COIL COMBINATION P
P.C.BOARD	: PRINTED CIRCUIT BOARD
W/COMPONENT	: WITH COMPONENT

CONTENTS

P.C.BOARDS LIST 6-1-1

ELECTRICAL REPLACEMENT PARTS LIST

W0 MOTHER 1 (AU-65-P,E,B) 6-1-7
W0 MOTHER 1 (AU-62-P,E,B) 6-1-7
W0 MOTHER 1 (AU-63-P,E,B) 6-1-8
W1 TBC & SYNC GEN (AU-65/63/62-P) 6-1-9
W1 TBC & SYNC GEN (AU-65/63/62-E,B) 6-1-13
W2 ENCODER (AU-65/63/62-P) 6-1-17
W2 ENCODER (AU-65/63/62-E,B) 6-1-24
W3 MOD & DEMOD (AU-65-P) 6-1-32
W3 MOD & DEMOD (AU-62-P) 6-1-39
W3 MOD & DEMOD (AU-63-P) 6-1-43
W3 MOD & DEMOD (AU-65-E,B) 6-1-49
W3 MOD & DEMOD (AU-63-E,B) 6-1-58
W3 MOD & DEMOD (AU-62-E,B) 6-1-65
W4 DEC & CTCM (AU-65-P) 6-1-72
W4 DEC & CTCM (AU-65-E,B) 6-1-80
W5 SERVO (AU-65-P) 6-1-86
W5 SERVO (AU-62-P) 6-1-91
W5 SERVO (AU-63-P) 6-1-96
W5 SERVO (AU-65/62-E,B) 6-1-103
W5 SERVO (AU-63-E,B) 6-1-109
W6 AUDIO (AU-65-P) 6-1-116
W6 AUDIO (AU-63/62-P) 6-1-123
W6 AUDIO (AU-65-E,B) 6-1-127
W6 AUDIO (AU-63/62-E,B) 6-1-134
B0 MOTHER 2 (AU-65/62-P,E,B) 6-1-138
B0 MOTHER 2 (AU-63-P,E,B) 6-1-138
B1 SYSTEM CONTROL (AU-65-P) 6-1-139
B1 SYSTEM CONTROL (AU-62-P) 6-1-142
B1 SYSTEM CONTROL (AU-63-P) 6-1-145
B1 SYSTEM CONTROL (AU-65-E,B) 6-1-148
B1 SYSTEM CONTROL (AU-63-E,B) 6-1-151
B1 SYSTEM CONTROL (AU-62-E,B) 6-1-154
AT POWER (AU-63-P,E,B) 6-1-157
AUDIO IN/OUT (AU-65-P,E,B) 6-1-157
AUDIO IN/OUT (AU-63/62-P,E,B) 6-1-160
AUDIO VR (AU-65-P,E,B) 6-1-162
AUDIO VR (AU-62-P,E,B) 6-1-162
AUDIO VR (AU-63-P,E,B) 6-1-162
AUTO OFF LED 6-1-163
CASSETTE CARRIAGE LAMP 6-1-163
CASSETTE DETECT 6-1-163
EJECT INTERFACE 6-1-163
EJECT SW 6-1-163
FRONT INTERFACE (AU-65-P) 6-1-163
FRONT INTERFACE (AU-62-P) 6-1-165
FRONT INTERFACE (AU-63-P) 6-1-166
FRONT INTERFACE (AU-65-E,B) 6-1-167
FRONT INTERFACE (AU-63-E,B) 6-1-168
FRONT INTERFACE (AU-62-E,B) 6-1-169
FRONT LOADING 6-1-170
FRONT MODE SELECT CIRCUIT (AU-65-P,E,B) 6-1-170
FRONT MODE SELECT CIRCUIT (AU-62-P,E,B) 6-1-171
FRONT MODE SELECT CIRCUIT (AU-63-P,E,B) 6-1-171
FRONT PANEL A (AU-65-P) 6-1-171
FRONT PANEL A (AU-65-E,B) 6-1-172
FRONT PANEL A (AU-63/62-P,E,B) 6-1-173

FRONT PANEL B (AU-65-P,E,B) 6-1-174
FRONT PANEL B (AU-63/62-P) 6-1-174
FRONT PANEL B (AU-63/62-E,B) 6-1-175
FRONT PANEL C (AU-65-P) 6-1-176
FRONT PANEL C (AU-65-E,B) 6-1-177
FRONT SW VR 6-1-179
HEADPHONE VR (AU-65/63/62-P) 6-1-179
HEADPHONE VR (AU-65/63/62-E,B) 6-1-179
LOADING PHOTO 6-1-179
MECHA INTERFACE CIRCUIT 6-1-179
METER LAMP 6-1-180
POWER FILTER (AU-65/63/62-P) 6-1-181
POWER FILTER (AU-65/63/62-E,B) 6-1-181
POWER SUPPLY UNIT (AU-65/63/62-P) 6-1-181
POWER SUPPLY UNIT (AU-65/63/62-E,B) 6-1-183
RA & HA (AU-65-P) 6-1-185
RA & HA (AU-62-P) 6-1-187
RA & HA (AU-63-P) 6-1-188
RA & HA (AU-65-E,B) 6-1-189
RA & HA (AU-62-E,B) 6-1-192
RA & HA (AU-63-E,B) 6-1-193
TR SENSOR (1) 6-1-194
TR SENSOR (2) 6-1-194
UNLOADING PHOTO 6-1-194
VIDEO IN/OUT (AU-65-P) 6-1-194
VIDEO IN/OUT (AU-63/62-P,E,B) 6-1-195
VIDEO IN/OUT (AU-65-E,B) 6-1-196
YC IN/OUT 6-1-198
9P REMOTE 6-1-198

MECHANICAL REPLACEMENT PARTS LIST

CASING FRAME ASSEMBLY 6-2-1
MECHANICAL CHASSIS ASSEMBLY (1) 6-2-2
MECHANICAL CHASSIS ASSEMBLY (2) 6-2-5
MECHANICAL CHASSIS ASSEMBLY (3) 6-2-6
MECHANICAL CHASSIS ASSEMBLY (4) 6-2-8
FRONT PANEL ASSEMBLY (AU-65-P,E,B) 6-2-10
FRONT PANEL ASSEMBLY (AU-63/62-P,E,B) 6-2-12
REAR JACK PANEL ASSEMBLY 6-2-14
CHASSIS FRAME ASSEMBLY 6-2-17
CASSETTE COMPARTMENT ASSEMBLY 6-2-18
PACKING 6-2-20

P.C.BOARDS LIST (TREE STYLE)

P.C.BOARD NAME	VEP NUMBER (AU-65 NTSC)	VEP NUMBER (AU-63 NTSC)	VEP NUMBER (AU-62 NTSC)
1. W0 MOTHER 1	VEP80548A	VEP80548D	VEP80548C
2. W1 TBC & SYNCGEN	VEP88062A	VEP88062A	VEP88062A
3. W2 ENCODER	VEP88063A	VEP88063A	VEP88063A
4. W3 MOD & DEMOD	VEP83098A	VEP83098D	VEP83098C
5. W4 DEC & CTCM	VEP83099A	-----	-----
6. W5 SERVO	VEP82061A	VEP82061D	VEP82061C
7. W6 AUDIO	VEP84095A	VEP84095C	VEP84095C
8. W6S TC TRAP SUB	└ VEP80635A	-----	-----
9. B0 MOTHER 2	VEP80549A	VEP80549B	VEP80549A
10. B1 SYSTEM CONTROL	VEP86088A	VEP86088D	VEP86088C
11. AT POWER	-----	VEP82062A	-----
12. AUDIO IN/OUT	VEP84094A	VEP84094C	VEP84094C
13. AUDIO IN/OUT SUB	└ VEP80573A	└ VEP80573A	└ VEP80573A
14. AUDIO VR	VEP84101A	VEP84101C	VEP84101B
15. AUTO OFF LED	VEP00E08C	VEP00E08C	VEP00E08C
16. CASSETTE CARRIAGE LAMP	VEP00E72A	VEP00E72A	VEP00E72A
17. CASSETTE DETECT	VEP00E30A	VEP00E30A	VEP00E30A
18. EJECT INTERFACE	VEP80422B	VEP80422B	VEP80422B
19. EJECT SW	VEP80232A	VEP80232A	VEP80232A
20. FRONT INTERFACE	VEP80553A	VEP80553C	VEP80553B
21. FRONT LOADING	VEP80440A	VEP80440A	VEP80440A
22. FRONT MODE SELECT CIRCUIT	VEP80559A	VEP80559D	VEP80559C
23. FRONT PANEL A	VEP86050C	VEP86086A	VEP86086A
24. FRONT PANEL B	VEP66022A	VEP86076C	VEP86076C

P.C.BOARD NAME	VEP NUMBER (AU－65 NTSC)	VEP NUMBER (AU－63 NTSC)	VEP NUMBER (AU－62 NTSC)
25. FRONT PANEL C	VEP86048F	-----	-----
26. FRONT SW VR	VEP80552A	VEP80552A	VEP80552A
27. HEADPHONE VR	VEP80108A	VEP80108A	VEP80108A
28. LOADING PHOTO	VEP00E04B	VEP00E04B	VEP00E04B
29. MECHA INTERFACE CIRCUIT	VEP80550A	VEP80550A	VEP80550A
30. METER LAMP	VEP80333B	VEP80333B	VEP80333B
31. POWER FILTER	VEP81042A	VEP81042A	VEP81042A
32. POWER SUPPLY UNIT	VYK3004	VYK3004	VYK3004
33. RA & HA	VEP85015A	VEP85015C	VEP85015B
34. TR SENSOR (1)	VEP00E27C	VEP00E27C	VEP00E27C
35. TR SENSOR (2)	VEP00E28C	VEP00E28C	VEP00E28C
36. UNLOADING PHOTO	VEP00E25C	VEP00E25C	VEP00E25C
37. VIDEO IN/OUT	VEP83097A	VEP83097B	VEP83097B
38. YC IN/OUT	VEP80574A	VEP80574A	VEP80574A
39. 9P REMOTE	VEP80551A	VEP80551A	VEP80551A

P.C.BOARDS LIST (TREE STYLE)

P.C.BOARD NAME	VEP NUMBER (AU-65 PAL)	VEP NUMBER (AU-63 PAL)	VEP NUMBER (AU-62 PAL)
1. W0 MOTHER 1	VEP80548A	VEP80548D	VEP80548C
2. W1 TBC & SYNCGEN	VEP88062C	VEP88062C	VEP88062C
3. W2 ENCODER	VEP88063C	VEP88063C	VEP88063C
4. W2S SC SUB	└ VEP80632A	└ VEP80632A	└ VEP80632A
5. W3 MOD & DEMOD	VEP83098E	VEP83098F	VEP83098G
6. W3 SUB	└ VEP80667A	-----	-----
7. W4 DEC & CTCM	VEP83099B	-----	-----
8. W5 SERVO	VEP82061E	VEP82061F	VEP82061E
9. W6 AUDIO	VEP84095D	VEP84095E	VEP84095E
10. W6S TC TRAP SUB	└ VEP80635A	-----	-----
11. B0 MOTHER 2	VEP80549A	VEP80549B	VEP80549A
12. B1 SYSTEM CONTROL	VEP86088E	VEP86088F	VEP86088M
13. AT POWER	-----	VEP82062A	-----
14. AUDIO IN/OUT	VEP84094A	VEP84094C	VEP84094C
15. AUDIO IN/OUT SUB	└ VEP80573A	└ VEP80573A	└ VEP80573A
16. AUDIO VR	VEP84101A	VEP84101C	VEP84101B
17. AUTO OFF LED	VEP00E08C	VEP00E08C	VEP00E08C
18. CASSETTE CARRIAGE LAMP	VEP00E72A	VEP00E72A	VEP00E72A
19. CASSETTE DETECT	VEP00E30A	VEP00E30A	VEP00E30A
20. EJECT INTERFACE	VEP80422B	VEP80422B	VEP80422B
21. EJECT SW	VEP80232A	VEP80232A	VEP80232A
22. FRONT INTERFACE	VEP80631A	VEP80631B	VEP80631C
23. FRONT LOADING	VEP80440A	VEP80440A	VEP80440A
24. FRONT MODE SELECT CIRCUIT	VEP80559A	VEP80559D	VEP80559C

P.C.BOARD NAME	VEP NUMBER (AU-65 PAL)	VEP NUMBER (AU-63 PAL)	VEP NUMBER (AU-62 PAL)
25. FRONT PANEL A	VEP86050D	VEP86086A	VEP86086A
26. FRONT PANEL B	VEP66022A	VEP86076D	VEP86076D
27. FRONT PANEL C	VEP86048G	-----	-----
28. FRONT SW VR	VEP80552A	VEP80552A	VEP80552A
29. HEADPHONE VR	VEP80616A	VEP80616A	VEP80616A
30. LOADING PHOTO	VEP00E04B	VEP00E04B	VEP00E04B
31. MECHA INTERFACE CIRCUIT	VEP80550A	VEP80550A	VEP80550A
32. METER LAMP	VEP80333B	VEP80333B	VEP80333B
33. POWER FILTER	VEP81058A	VEP81058A	VEP81058A
34. POWER SUPPLY UNIT	VYK3637	VYK3637	VYK3637
35. RA & HA	VEP85015D	VEP85015F	VEP85015E
36. TR SENSOR (1)	VEP00E27C	VEP00E27C	VEP00E27C
37. TR SENSOR (2)	VEP00E28C	VEP00E28C	VEP00E28C
38. UNLOADING PHOTO	VEP00E25C	VEP00E25C	VEP00E25C
39. VIDEO IN/OUT	VEP83097C	VEP83097B	VEP83097B
40. YC IN/OUT	VEP80574A	VEP80574A	VEP80574A
41. 9P REMOTE	VEP80551A	VEP80551A	VEP80551A

ELECTRICAL REPLACEMENT PARTS LIST

Ref.No.		Part No.	Part Name & Description	Pcs	Remarks
		VEP80548A	P.C.BOARD W/COMPONENT	1	FOR AU-65-P,E.B
			WO MOTHER 1		
		VEP80548C	P.C.BOARD W/COMPONENT	1	FOR AU-62-P,E.B
			WO MOTHER 1		
		VEP80548D	P.C.BOARD W/COMPONENT	1	FOR AU-63-P,E.B
			WO MOTHER 1		
		VEP88062A	P.C.BOARD W/COMPONENT	1	
			W1 TBC & SYNCGEN		
		VEP88062C	P.C.BOARD W/COMPONENT	1	
			W1 TBC & SYNCGEN		
		VEP88063A	P.C.BOARD W/COMPONENT	1	
			W2 ENCODER		
		VEP88063C	P.C.BOARD W/COMPONENT	1	
			W2 ENCODER		
		VEP80632A	P.C.BOARD W/COMPONENT	1	ON VEP88063C
			W2S SC SUB		
		VEP83098A	P.C.BOARD W/COMPONENT	1	FOR AU-65-P
			W3 MOD & DEMOD		
		VEP83098C	P.C.BOARD W/COMPONENT	1	FOR AU-62-P
			W3 MOD & DEMOD		
		VEP83098D	P.C.BOARD W/COMPONENT	1	FOR AU-63-P
			W3 MOD & DEMOD		
		VEP83098E	P.C.BOARD W/COMPONENT	1	FOR AU-65-E,B
			W3 MOD & DEMOD		
		VEP83098F	P.C.BOARD W/COMPONENT	1	FOR AU-63-E,B
			W3 MOD & DEMOD		
		VEP83098G	P.C.BOARD W/COMPONENT	1	FOR AU-62-E,B
			W3 MOD & DEMOD		
		VEP80667A	P.C.BOARD W/COMPONENT	1	FOR AU-65-E,B
			W3 SUB		ON VEP83098E
		VEP83099A	P.C.BOARD W/COMPONENT	1	FOR AU-65-P
			W4 DEC & CTCM		
		VEP83099B	P.C.BOARD W/COMPONENT	1	FOR AU-65-E,B
			W4 DEC & CTCM		
		VEP82061A	P.C.BOARD W/COMPONENT	1	FOR AU-65-P
			W5 SERVO		
		VEP82061C	P.C.BOARD W/COMPONENT	1	FOR AU-62-P
			W5 SERVO		
		VEP82061D	P.C.BOARD W/COMPONENT	1	FOR AU-63-P
			W5 SERVO		
		VEP82061E	P.C.BOARD W/COMPONENT	1	FOR AU-65-E,B
			W5 SERVO		AU-62-E,B
		VEP82061F	P.C.BOARD W/COMPONENT	1	FOR AU-63-E,B
			W5 SERVO		
		VEP84095A	P.C.BOARD W/COMPONENT	1	FOR AU-65-P
			W6 AUDIO		
		VEP84095C	P.C.BOARD W/COMPONENT	1	FOR AU-63-P
			W6 AUDIO		AU-62-P
		VEP84095D	P.C.BOARD W/COMPONENT	1	FOR AU-65-E,B
			W6 AUDIO		
		VEP84095E	P.C.BOARD W/COMPONENT	1	FOR AU-63-E,B
			W6 AUDIO		AU-62-E,B
		VEP80635A	P.C.BOARD W/COMPONENT	1	FOR AU-65-E,B
			W6S TC TRAP SUB		ON VEP84095D
		VEP80549A	P.C.BOARD W/COMPONENT	1	FOR AU-65-P,E,B
			BO MOTHER 2		AU-62-P,E,B
		VEP80549B	P.C.BOARD W/COMPONENT	1	FOR AU-63-P,E,B
			BO MOTHER 2		
		VEP86088A	P.C.BOARD W/COMPONENT	1	FOR AU-65-P
			B1 SYSTEM CONTROL		
		VEP86088C	P.C.BOARD W/COMPONENT	1	FOR AU-62-P
			B1 SYSTEM CONTROL		
		VEP86088D	P.C.BOARD W/COMPONENT	1	FOR AU-63-P
			B1 SYSTEM CONTROL		
		VEP86088E	P.C.BOARD W/COMPONENT	1	FOR AU-65-E,B
			B1 SYSTEM CONTROL		
		VEP86088F	P.C.BOARD W/COMPONENT	1	FOR AU-63-E,B

Ref.No.		Part No.	Part Name & Description	Pcs	Remarks
			B1 SYSTEM CONTROL		
		VEP86088M	P.C.BOARD W/COMPONENT	1	FOR AU-62-E,B
			B1 SYSTEM CONTROL		
		VEP82062A	P.C.BOARD W/COMPONENT	1	FOR AU-63-P,E,B
			AT POWER		
		VEP84094A	P.C.BOARD W/COMPONENT	1	FOR AU-65-P,E,B
			AUDIO IN/OUT		
		VEP84094C	P.C.BOARD W/COMPONENT	1	FOR AU-63-P,E,B
			AUDIO IN/OUT		AU-62-P,E,B
		VEP80573A	P.C.BOARD W/COMPONENT	1	
			AUDIO IN/OUT SUB		
		VEP84101A	P.C.BOARD W/COMPONENT	1	FOR AU-65-P,E,B
			AUDIO VR		
		VEP84101B	P.C.BOARD W/COMPONENT	1	FOR AU-62-P,E,B
			AUDIO VR		
		VEP84101C	P.C.BOARD W/COMPONENT	1	FOR AU-63-P,E,B
			AUDIO VR		
		VEP00E08C	P.C.BOARD W/COMPONENT	1	
			AUTO OFF LED		
		VEP00E72A	P.C.BOARD W/COMPONENT	1	
			CASSETTE CARRIAGE LAMP		
		VEP00E30A	P.C.BOARD W/COMPONENT	1	
			CASSETTE DETECT		
		VEP80422B	P.C.BOARD W/COMPONENT	1	
			EJECT INTERFACE		
		VEP80232A	P.C.BOARD W/COMPONENT	1	
			EJECT SW		
		VEP80553A	P.C.BOARD W/COMPONENT	1	FOR AU-65-P
			FRONT INTERFACE		
		VEP80553B	P.C.BOARD W/COMPONENT	1	FOR AU-62-P
			FRONT INTERFACE		
		VEP80553C	P.C.BOARD W/COMPONENT	1	FOR AU-63-P
			FRONT INTERFACE		
		VEP80631A	P.C.BOARD W/COMPONENT	1	FOR AU-65-E,B
			FRONT INTERFACE		
		VEP80631B	P.C.BOARD W/COMPONENT	1	FOR AU-63-E,B
			FRONT INTERFACE		
		VEP80631C	P.C.BOARD W/COMPONENT	1	FOR AU-62-E,B
			FRONT INTERFACE		
		VEP80440A	P.C.BOARD W/COMPONENT	1	
			FRONT LOADING		
		VEP80559A	P.C.BOARD W/COMPONENT	1	FOR AU-65-P,E,B
			FRONT MODE SELECT CIRCUIT		
		VEP80559C	P.C.BOARD W/COMPONENT	1	FOR AU-62-P,E,B
			FRONT MODE SELECT CIRCUIT		
		VEP80559D	P.C.BOARD W/COMPONENT	1	FOR AU-63-P,E,B
			FRONT MODE SELECT CIRCUIT		
		VEP86050C	P.C.BOARD W/COMPONENT	1	FOR AU-65-P
			FRONT PANEL A		
		VEP86050D	P.C.BOARD W/COMPONENT	1	FOR AU-65-E,B
			FRONT PANEL A		
		VEP86086A	P.C.BOARD W/COMPONENT	1	FOR AU-63-P,E,B
			FRONT PANEL A		FOR AU-62-P,E,B
		VEP66022A	P.C.BOARD W/COMPONENT	1	FOR AU-65-P,E,B
			FRONT PANEL B		
		VEP86076C	P.C.BOARD W/COMPONENT	1	FOR AU-63-P
			FRONT PANEL B		FOR AU-62-P
		VEP86076D	P.C.BOARD W/COMPONENT	1	FOR AU-63-E,B
			FRONT PANEL B		FOR AU-62-E,B
		VEP86048F	P.C.BOARD W/COMPONENT	1	FOR AU-65-P
			FRONT PANEL C		

Refer to the P.C.BOARDS LIST, page 6-1-1, before using this page.

Ref.No.		Part No.	Part Name & Description	Pcs	Remarks
		VEP86048G	P.C.BOARD W/COMPONENT	1	FOR AU-65-E,B
			FRONT PANEL C		
		VEP80552A	P.C.BOARD W/COMPONENT	1	
			FRONT SW VR		
		VEP80108A	P.C.BOARD W/COMPONENT	1	
			HEADPHONE VR		
		VEP80616A	P.C.BOARD W/COMPONENT	1	
			HEADPHONE VR		
		VEP00E04B	P.C.BOARD W/COMPONENT	1	
			LOADING PHOTO		
		VEP80550A	P.C.BOARD W/COMPONENT	1	
			MECHA INTERFACE CIRCUIT		
		VEP80333B	P.C.BOARD W/COMPONENT	1	
			METER LAMP		
		VEP81042A	P.C.BOARD W/COMPONENT	1	
			POWER FILTER		
		VEP81058A	P.C.BOARD W/COMPONENT	1	
			POWER FILTER		
		VYK3004	P.C.BOARD W/COMPONENT	1	
			POWER SUPPLY UNIT		
		VYK3637	P.C.BOARD W/COMPONENT	1	
			POWER SUPPLY UNIT		
		VEP85015A	P.C.BOARD W/COMPONENT	1	FOR AU-65-P
			RA & HA		
		VEP85015B	P.C.BOARD W/COMPONENT	1	FOR AU-62-P
			RA & HA		
		VEP85015C	P.C.BOARD W/COMPONENT	1	FOR AU-63-P
			RA & HA		
		VEP85015D	P.C.BOARD W/COMPONENT	1	FOR AU-65-E,B
			RA & HA		
		VEP85015E	P.C.BOARD W/COMPONENT	1	FOR AU-62-E,B
			RA & HA		
		VEP85015F	P.C.BOARD W/COMPONENT	1	FOR AU-63-E,B
			RA & HA		
		VEP00E27C	P.C.BOARD W/COMPONENT	1	
			TR SENSOR (1)		
		VEP00E28C	P.C.BOARD W/COMPONENT	1	
			TR SENSOR (2)		
		VEP00E25C	P.C.BOARD W/COMPONENT	1	
			UNLOADING PHOTO		
		VEP83097A	P.C.BOARD W/COMPONENT	1	FOR AU-65-P
			VIDEO IN/OUT		
		VEP83097B	P.C.BOARD W/COMPONENT	1	FOR AU-63-P,E,B
			VIDEO IN/OUT		FOR AU-62-P,E,B
		VEP83097C	P.C.BOARD W/COMPONENT	1	FOR AU-65-E,B
			VIDEO IN/OUT		
		VEP80574A	P.C.BOARD W/COMPONENT	1	
			YC IN/OUT		
		VEP80551A	P.C.BOARD W/COMPONENT	1	
			9P REMOVE		

Ref.No.		Part No.	Part Name & Description	Pcs	Remarks

Refer to the P.C.BOARDS LIST, page 6-1-1, before using this page.

Ref.No.		Part No.	Part Name & Description	Pcs	Remarks
	■	VEP80548A	P.C.BOARD W/COMPONENT		FOR AU-65-P,E,B
			WO MOTHER 1		
			CAPACITORS		
C1,C2		ECEA1CU221	E.CAPACITOR 16V 220U	2	
CN8		VJP1229T	CONNECTOR(MALE) 2P	1	
CN9		VJP1230T	CONNECTOR(MALE)	1	
CN12-14		VJP1511T	CONNECTOR(MALE)	3	
CN15		VJP1932T	CONNECTOR (MALE)	1	
CN17		VJP1235T	CONNECTOR(MALE) 8P	1	
CN20		VJP2893A064	CONNECTOR (MALE)	1	
CN21		VJP1233T	CONNECTOR(MALE) 6P	1	
CN22,23		VJP1232T	CONNECTOR(MALE) 5P	2	
CN24		VJP1931T	CONNECTOR (MALE)	1	
CN25		VJP1237T	CONNECTOR(MALE) 10P	1	
CN26		VJP1931T	CONNECTOR (MALE)	1	
CN28		VJP1231T	CONNECTOR(MALE) 4P	1	
CN30,31		VJP1932T	CONNECTOR (MALE)	2	
CN36		VJP1239T	CONNECTOR(MALE) 12P	1	
CN39		VJP1239T	CONNECTOR(MALE) 12P	1	
CN40		VJP1929T	CONNECTOR (MALE)	1	
CN41,42		VJP1932T	CONNECTOR (MALE)	2	
CN46		VJP1252T	CONNECTOR(MALE) 12P	1	
CN48		VJP1237T	CONNECTOR(MALE) 10P	1	
CN600		VJP1230T	CONNECTOR(MALE) 3P	1	
POWER1		VJP1709	CONNECTOR (MALE)	1	
POWER2		VJP1627	CONNECTOR(MALE)	1	
W4F		VJS2898A100	CONNECTOR (FEMALE)	1	
W4R		VJS2898A100	CONNECTOR (FEMALE)	1	
			MISCELLANEOUS		
		VJF0004	CLAMPER	1	
		VMP2617	P.C.B. HOLDER ANGLE	1	
		VMP2618	P.C.B. HOLDER ANGLE	1	
		VMP2619	P.C.B. HOLDER ANGLE	1	
		XNG26E	NUT	8	
		XTV26+10F	SCREW	24	
		XWA26B	WASHER	8	
		XWG26	NUT	8	

Refer to the P.C.BOARDS LIST, page 6-1-1, before using this page.

Ref.No.		Part No.	Part Name & Description	Pcs	Remarks
	■	VEP80548C	P.C.BOARD W/COMPONENT		FOR AU-62-P,E,B
			WO MOTHER 1		
			CAPACITORS		
C1,C2		ECEA1CU221	E.CAPACITOR 16V 220U	2	
CN8		VJP1229T	CONNECTOR(MALE) 2P	1	
CN12-14		VJP1511T	CONNECTOR(MALE)	3	
CN15		VJP1932T	CONNECTOR (MALE)	1	
CN17		VJP1235T	CONNECTOR(MALE) 8P	1	
CN20		VJP2893A064	CONNECTOR (MALE)	1	
CN21		VJP1233T	CONNECTOR(MALE) 6P	1	
CN22,23		VJP1232T	CONNECTOR(MALE) 5P	2	
CN24		VJP1931T	CONNECTOR (MALE)	1	
CN25		VJP1237T	CONNECTOR(MALE) 10P	1	
CN26		VJP1931T	CONNECTOR (MALE)	1	
CN28		VJP1231T	CONNECTOR(MALE) 4P	1	
CN30,31		VJP1932T	CONNECTOR (MALE)	2	
CN36		VJP1239T	CONNECTOR(MALE) 12P	1	
CN39		VJP1239T	CONNECTOR(MALE) 12P	1	
CN40		VJP1929T	CONNECTOR (MALE)	1	
CN41,42		VJP1932T	CONNECTOR (MALE)	2	
CN46		VJP1252T	CONNECTOR(MALE) 12P	1	
CN48		VJP1237T	CONNECTOR(MALE) 10P	1	
CN600		VJP1230T	CONNECTOR(MALE) 3P	1	
POWER1		VJP1709	CONNECTOR (MALE)	1	
POWER2		VJP1627	CONNECTOR(MALE)	1	
			MISCELLANEOUS		
		VJF0004	CLAMPER	1	
		VJF0304	CLAMPER	4	
		VMP2617	P.C.B. HOLDER ANGLE	1	
		VMP2618	P.C.B. HOLDER ANGLE	1	
		VMP2619	P.C.B. HOLDER ANGLE	1	
		XNG26E	NUT	8	
		XTV26+10F	SCREW	20	
		XWA26B	WASHER	8	
		XWG26	WASHER	8	

Refer to the P.C.BOARDS LIST, page 6-1-1, before using this page.

Ref.No.		Part No.	Part Name & Description	Pcs	Remarks
	■	VEP80548D	P.C.BOARD W/COMPONENT		FOR AU-63-P,E,B
			WO MOTHER 1		
			CAPACITORS		
C1,C2		ECEA1CU221	E.CAPACITOR 16V 220U	2	
CN8		VJP1229T	CONNECTOR(MALE) 2P	1	
CN12-14		VJP1511T	CONNECTOR(MALE)	3	
CN15		VJP1932T	CONNECTOR (MALE)	1	
CN17		VJP1235T	CONNECTOR(MALE) 8P	1	
CN20		VJP2893A064	CONNECTOR (MALE)	1	
CN21		VJP1233T	CONNECTOR(MALE) 6P	1	
CN22,23		VJP1232T	CONNECTOR(MALE) 5P	2	
CN24		VJP1931T	CONNECTOR (MALE)	1	
CN25		VJP1237T	CONNECTOR(MALE) 10P	1	
CN26		VJP1931T	CONNECTOR (MALE)	1	
CN28		VJP1231T	CONNECTOR(MALE) 4P	1	
CN30,31		VJP1932T	CONNECTOR (MALE)	2	
CN34		VJP1246T	CONNECTOR(MALE) 6P	1	
CN35		VJP1251T	CONNECTOR(MALE) 11P	1	
CN36		VJP1239T	CONNECTOR(MALE) 12P	1	
CN39		VJP1239T	CONNECTOR(MALE) 12P	1	
CN40		VJP1929T	CONNECTOR (MALE)	1	
CN41,42		VJP1932T	CONNECTOR (MALE)	2	
CN46		VJP1252T	CONNECTOR(MALE) 12P	1	
CN48		VJP1237T	CONNECTOR(MALE) 10P	1	
CN600		VJP1230T	CONNECTOR(MALE) 3P	1	
POWER1		VJP1709	CONNECTOR (MALE)	1	
POWER2		VJP1627	CONNECTOR(MALE)	1	
			MISCELLANEOUS		
		VJF0004	CLAMPER	1	
		VJF0304	CLAMPER	4	
		VMP2617	P.C.B. HOLDER ANGLE	1	
		VMP2618	P.C.B. HOLDER ANGLE	1	
		VMP2619	P.C.B. HOLDER ANGLE	1	
		XNG26E	NUT	8	
		XTV26+10F	SCREW	20	
		XWA26B	WASHER	8	
		XWG26	NUT	8	

Refer to the P.C.BOARDS LIST, page 6-1-1, before using this page.

Ref.No.		Part No.	Part Name & Description	Pcs	Remarks
	■	VEP88062A	P.C.BOARD W/COMPONENT		
			W1 TBC & SYNCGEN		
			CAPACITORS		
C1		ECUM1E104ZFN	C.CAPACITOR CH 25V 0.1U	1	
C2		ECEA0JU101	E.CAPACITOR 6.3V 100U	1	
C3		ECUM1E104ZFN	C.CAPACITOR CH 25V 0.1U	1	
C4		ECEA0JU101	E.CAPACITOR 6.3V 100U	1	
C5		ECUM1E104ZFN	C.CAPACITOR CH 25V 0.1U	1	
C6		ECEA1CU101	E.CAPACITOR 16V 100U	1	
C7		ECUM1E104ZFN	C.CAPACITOR CH 25V 0.1U	1	
C8		ECEA1CU101	E.CAPACITOR 16V 100U	1	
C9		ECUM1E104ZFN	C.CAPACITOR CH 25V 0.1U	1	
C10		ECEA1AU101	E.CAPACITOR 10V 100U	1	
C11		ECUM1E104ZFN	C.CAPACITOR CH 25V 0.1U	1	
C12		ECEA1CU101	E.CAPACITOR 16V 100U	1	
C13		ECUM1E104ZFN	C.CAPACITOR CH 25V 0.1U	1	
C14		ECEA1AU101	E.CAPACITOR 10V 100U	1	
C15,16		ECUM1E104ZFN	C.CAPACITOR CH 25V 0.1U	2	
C17		ECUM1C104KBN	C.CAPACITOR CH 16V 0.1U	1	
C18-22		ECUM1E104ZFN	C.CAPACITOR CH 25V 0.1U	5	
C23		ECEA1CU220	E.CAPACITOR 16V 22U	1	
C24		ECUM1E104ZFN	C.CAPACITOR CH 25V 0.1U	1	
C25		ECEA1HU2R2	E.CAPACITOR 50V 2.2U	1	
C26		ECEA1CU220	E.CAPACITOR 16V 22U	1	
C27		ECUM1E104ZFN	C.CAPACITOR CH 25V 0.1U	1	
C28		ECEA1CU220	E.CAPACITOR 16V 22U	1	
C29-33		ECUM1E104ZFN	C.CAPACITOR CH 25V 0.1U	5	
C34		ECEA1HU2R2	E.CAPACITOR 50V 2.2U	1	
C35		ECEA1CU220	E.CAPACITOR 16V 22U	1	
C36		ECUM1E104ZFN	C.CAPACITOR CH 25V 0.1U	1	
C37		ECEA1AU221	E.CAPACITOR 10V 220U	1	
C38		ECEA1HU2R2	E.CAPACITOR 50V 2.2U	1	
C39		ECUM1E104ZFN	C.CAPACITOR CH 25V 0.1U	1	
C40		ECEA0JU101	E.CAPACITOR 6.3V 100U	1	
C41-48		ECUM1C104KBN	C.CAPACITOR CH 16V 0.1U	8	
C49-52		ECUM1E104ZFN	C.CAPACITOR CH 25V 0.1U	4	
C53		ECUM1C104KBN	C.CAPACITOR CH 16V 0.1U	1	
C57,58		ECUM1H101JCN	C.CAPACITOR CH 50V 100P	2	
C59,60		ECUM1C104KBN	C.CAPACITOR CH 16V 0.1U	2	
C61-64		ECUM1E104ZFN	C.CAPACITOR CH 25V 0.1U	4	
C65		ECUM1C104KBN	C.CAPACITOR CH 16V 0.1U	1	
C66		ECUM1E104ZFN	C.CAPACITOR CH 25V 0.1U	1	
C67-73		ECUM1C104KBN	C.CAPACITOR CH 16V 0.1U	7	
C74-78		ECUM1E104ZFN	C.CAPACITOR CH 25V 0.1U	5	
C79		ECEA1CU220	E.CAPACITOR 16V 22U	1	
C81		ECQV1H474JZ	P.CAPACITOR 50V 0.47U	1	
C201		ECEA1AU470	E.CAPACITOR 10V 47U	1	
C202,03		ECUM1H103KBN	C.CAPACITOR CH 50V 0.01U	2	
C204		ECUM1H181JCN	C.CAPACITOR CH 50V 180P	1	
C205		ECUM1H103KBN	C.CAPACITOR CH 50V 0.01U	1	
C206		ECUM1H180JCN	C.CAPACITOR CH 50V 18P	1	
C207		ECUM1H680JCN	C.CAPACITOR CH 50V 68P	1	
C208,09		ECUM1C104KBN	C.CAPACITOR CH 16V 0.1U	2	
C210		ECEA1HN010S	E.CAPACITOR 50V 1U	1	
C211		ECUM1E104ZFN	C.CAPACITOR CH 25V 0.1U	1	
C212		ECEA1CU470	E.CAPACITOR 16V 47U	1	
C213		ECUM1H330JCN	C.CAPACITOR CH 50V 33P	1	
C214		ECUM1H101JCN	C.CAPACITOR CH 50V 100P	1	
C215		ECUM1H181JCN	C.CAPACITOR CH 50V 180P	1	
C216		ECUM1H101JCN	C.CAPACITOR CH 50V 100P	1	
C217		ECUM1H220JCN	C.CAPACITOR CH 50V 22P	1	
C218		ECUM1H470JCN	C.CAPACITOR CH 50V 47P	1	
C219-22		ECUM1E104ZFN	C.CAPACITOR CH 25V 0.1U	4	
C223,24		ECUM1H150JCN	C.CAPACITOR CH 50V 15P	2	
C225		ECUM1H820JCN	C.CAPACITOR CH 50V 82P	1	
C226		ECEA1CU100	E.CAPACITOR 16V 10U	1	
C227		ECEA1CU470	E.CAPACITOR 16V 47U	1	

Ref.No.		Part No.	Part Name & Description	Pcs	Remarks
C228		ECUM1E104ZFN	C.CAPACITOR CH 25V 0.1U	1	
C229		ECUM1H103KBN	C.CAPACITOR CH 50V 0.01U	1	
C230		ECUM1E104ZFN	C.CAPACITOR CH 25V 0.1U	1	
C231		ECEA1HN2R2S	E.CAPACITOR 50V 2.2U	1	
C232		ECUM1E104ZFN	C.CAPACITOR CH 25V 0.1U	1	
C233		ECUM1H270JCN	C.CAPACITOR CH 50V 27P	1	
C234		ECV1ZW20X53T	V.CAPACITOR 20P	1	
C235		ECUM1H102JCN	C.CAPACITOR CH 50V 1000P	1	
C236		ECUM1E104ZFN	C.CAPACITOR CH 25V 0.1U	1	
C237		ECEA1CU100	E.CAPACITOR 16V 10U	1	
C238,39		ECUM1H470JCN	C.CAPACITOR CH 50V 47P	2	
C240		ECUM1H103KBN	C.CAPACITOR CH 50V 0.01U	1	
C241,42		ECUM1E104ZFN	C.CAPACITOR CH 25V 0.1U	2	
C243		ECUM1C104KBN	C.CAPACITOR CH 16V 0.1U	1	
C244-46		ECUM1E104ZFN	C.CAPACITOR CH 25V 0.1U	3	
C247		ECUM1H390JCN	C.CAPACITOR CH 50V 39P	1	
C248		ECUM1E104ZFN	C.CAPACITOR CH 25V 0.1U	1	
C249		ECUM1H270JCN	C.CAPACITOR CH 50V 27P	1	
C250		ECEA1CU470	E.CAPACITOR 16V 47U	1	
C251		ECEA1AU470	E.CAPACITOR 10V 47U	1	
C252		ECUM1E104ZFN	C.CAPACITOR CH 25V 0.1U	1	
C253		ECEA1CU100	E.CAPACITOR 16V 10U	1	
C254,55		ECUM1E104ZFN	C.CAPACITOR CH 25V 0.1U	2	
C256		ECUM1H103KBN	C.CAPACITOR CH 50V 0.01U	1	
C257		ECUM1E104ZFN	C.CAPACITOR CH 25V 0.1U	1	
C258		ECEA1HN010S	E.CAPACITOR 50V 1U	1	
C259		ECUM1E104ZFN	C.CAPACITOR CH 25V 0.1U	1	
C260		ECEA1AU470	E.CAPACITOR 10V 47U	1	
C261		ECUM1E104ZFN	C.CAPACITOR CH 25V 0.1U	1	
C262		ECEA1AU470	E.CAPACITOR 10V 47U	1	
C263		ECUM1E104ZFN	C.CAPACITOR CH 25V 0.1U	1	
C264		ECEA1CN100S	E.CAPACITOR 16V 10U	1	
C265		ECUM1H102JCN	C.CAPACITOR CH 50V 1000P	1	
C266		ECUM1H150JCN	C.CAPACITOR CH 50V 15P	1	
C267,68		ECUM1E104ZFN	C.CAPACITOR CH 25V 0.1U	2	
C270		ECUM1H103KBN	C.CAPACITOR CH 50V 0.01U	1	
C271-73		ECUM1E104ZFN	C.CAPACITOR CH 25V 0.1U	3	
C274		ECUM1C104KBN	C.CAPACITOR CH 16V 0.1U	1	
C275		ECUM1H102JCN	C.CAPACITOR CH 50V 1000P	1	
C276		ECUM1E104ZFN	C.CAPACITOR CH 25V 0.1U	1	
C277		ECEA1AU470	E.CAPACITOR 10V 47U	1	
C279		ECUM1H103KBN	C.CAPACITOR CH 50V 0.01U	1	
C280,81		ECUM1E104ZFN	C.CAPACITOR CH 25V 0.1U	2	
C282		ECUM1C104KBN	C.CAPACITOR CH 16V 0.1U	1	
C283		ECUM1H102JCN	C.CAPACITOR CH 50V 1000P	1	
C284		ECUM1E104ZFN	C.CAPACITOR CH 25V 0.1U	1	
C286-91		ECUM1E104ZFN	C.CAPACITOR CH 25V 0.1U	6	
C292		ECUM1H100DCN	C.CAPACITOR CH 50V 10P	1	
C401		ECQM1H222JF	P.CAPACITOR 50V 2200P	1	
C402		ECQM1H223JF	P.CAPACITOR 50V 0.022U	1	
C403		ECQM1H222JF	P.CAPACITOR 50V 2200P	1	
C404		ECEA1AU101	E.CAPACITOR 10V 100U	1	
C406		ECQM1H102JF	P.CAPACITOR 50V 1000P	1	
C409		ECUM1E104ZFN	C.CAPACITOR CH 25V 0.1U	1	
C410,11		ECUM1H820JCN	C.CAPACITOR CH 50V 82P	2	
C412		ECUM1E104ZFN	C.CAPACITOR CH 25V 0.1U	1	
C413		ECUM1H820JCN	C.CAPACITOR CH 50V 82P	1	
C414-18		ECUM1E104ZFN	C.CAPACITOR CH 25V 0.1U	5	
C423		ECUM1H391JCN	C.CAPACITOR CH 50V 390P	1	
C424		ECUM1E104ZFN	C.CAPACITOR CH 25V 0.1U	1	
C425		ECQM1H102JF	P.CAPACITOR 50V 1000P	1	
C426		ECUM1H221JCN	C.CAPACITOR CH 50V 220P	1	
C427		ECQM1H102JF	P.CAPACITOR 50V 1000P	1	
C438		ECUM1H221JCN	C.CAPACITOR CH 50V 220P	1	
C441		ECQM1H102JF	P.CAPACITOR 50V 1000P	1	
C442		ECUM1H221JCN	C.CAPACITOR CH 50V 220P	1	
C443,44		ECUM1E104ZFN	C.CAPACITOR CH 25V 0.1U	2	
C452		ECUM1H151JCN	C.CAPACITOR CH 50V 150P	1	
C453		ECQM1H223JF	P.CAPACITOR 50V 0.022U	1	
C454		ECQM1H122JF	P.CAPACITOR 50V 1200P	1	
C455		ECQM1H104JF	P.CAPACITOR 50V 0.1U	1	
C456		ECEA1CN100S	E.CAPACITOR 16V 10U	1	
C457		ECUM1H561JCN	C.CAPACITOR CH 50V 560P	1	
C458		ECUM1E104ZFN	C.CAPACITOR CH 25V 0.1U	1	
C459		ECEA1AU220	E.CAPACITOR 10V 22U	1	

Refer to the P.C.BOARDS LIST, page 6-1-1, before using this page.

Ref.No.		Part No.	Part Name & Description	Pcs	Remarks
C460,61		ECUM1H101JCN	C.CAPACITOR CH 50V 100P	2	
C462		ECUM1E104ZFN	C.CAPACITOR CH 25V 0.1U	1	
C463		ECEA1AU220	E.CAPACITOR 10V 22U	1	
C464		ECUM1H103ZFN	C.CAPACITOR CH 50V 0.01U	1	
C465		ECUM1H560JCN	C.CAPACITOR CH 50V 56P	1	
C467		ECUM1E104ZFN	C.CAPACITOR CH 25V 0.1U	1	
C468		ECEA1AU220	E.CAPACITOR 10V 22U	1	
C469,70		ECUM1E104ZFN	C.CAPACITOR CH 25V 0.1U	2	
C471		ECUM1H151JCN	C.CAPACITOR CH 50V 150P	1	
C473		ECUM1E104ZFN	C.CAPACITOR CH 25V 0.1U	1	
C474		ECEA1AU101	E.CAPACITOR 10V 100U	1	
C475		ECUM1E104ZFN	C.CAPACITOR CH 25V 0.1U	1	
C476		ECEA1CU101	E.CAPACITOR 16V 100U	1	
C477		ECUM1E104ZFN	C.CAPACITOR CH 25V 0.1U	1	
C478		ECEA1CU101	E.CAPACITOR 16V 100U	1	
C479		ECQM1H103JF	P.CAPACITOR 50V 0.01U	1	
C480		ECUM1H470JCN	C.CAPACITOR CH 50V 47P	1	
C481		ECUM1H181JCN	C.CAPACITOR CH 50V 180P	1	
C482		ECQM1H122JF	P.CAPACITOR 50V 1200P	1	
C483		ECQM1H103JF	P.CAPACITOR 50V 0.01U	1	
C484		ECUM1E104ZFN	C.CAPACITOR CH 25V 0.1U	1	
C485		ECEA1AU220	E.CAPACITOR 10V 22U	1	
C486		ECUM1E104ZFN	C.CAPACITOR CH 25V 0.1U	1	
C487		ECEA1HUR47	E.CAPACITOR 50V 0.47U	1	
C488		ECEA1HN010S	E.CAPACITOR 50V 1U	1	
C489		ECEA1HU2R2	E.CAPACITOR 50V 2.2U	1	
C490		ECUM1H330JCN	C.CAPACITOR CH 50V 33P	1	
C491		ECQM1H223JF	P.CAPACITOR 50V 0.022U	1	
C504		ECUM1H470JCN	C.CAPACITOR CH 50V 47P	1	
C514		ECUM1E104ZFN	C.CAPACITOR CH 25V 0.1U	1	
C517		ECUM1H470JCN	C.CAPACITOR CH 50V 47P	1	
C518-20		ECUM1E104ZFN	C.CAPACITOR CH 25V 0.1U	3	
C521		ECEA1CU101	E.CAPACITOR 16V 100U	1	
C522		ECUM1E104ZFN	C.CAPACITOR CH 25V 0.1U	1	
C523		ECEA1CU101	E.CAPACITOR 16V 100U	1	
C524		ECUM1E104ZFN	C.CAPACITOR CH 25V 0.1U	1	
C525		ECEA1AU101	E.CAPACITOR 10V 100U	1	
C528		ECEA1AU220	E.CAPACITOR 10V 22U	1	
C529		ECUM1E104ZFN	C.CAPACITOR CH 25V 0.1U	1	
C551		ECUM1E104ZFN	C.CAPACITOR CH 25V 0.1U	1	
C600-09		ECUM1E104ZFN	C.CAPACITOR CH 25V 0.1U	10	
C614,15		ECUM1E104ZFN	C.CAPACITOR CH 25V 0.1U	2	
D201		MA151WA	DIODE	1	
D202		MA335R	DIODE	1	
D203-10		MA151K	DIODE	8	
D211		MA151WK	DIODE	1	
D212		MA151K	DIODE	1	
D401		1SS101	DIODE	1	
D402		MA151K	DIODE	1	
D404		MA153	DIODE	1	
D406		MA151K	DIODE	1	
D407		MA335R	DIODE	1	
D408-10		MA151K	DIODE	3	
D416,17		MA151K	DIODE	2	
IC1,C2		CY7C128-45PC	IC	2	
IC4,C5		MC74HC574F	IC	2	(R)
IC7		UPD65013F101	IC	1	
IC9		MC74HC574F	IC	1	(R)
IC11		MC74HC08AF	IC	1	
IC13,14		CY7C128-45PC	IC	2	
IC15,16		MC74HC574F	IC	2	(R)
IC17		UPD65012F475	IC	1	
IC18,19		MC74HC574F	IC	2	(R)
IC20		N74F02D	IC	1	
IC21		N74F04D	IC	1	
IC22		MC74HC574F	IC	1	(R)
IC24		MSM77H021GSK	IC	1	
IC25		MSM71056	IC	1	
IC26		VSI0192	IC	1	

Ref.No.		Part No.	Part Name & Description	Pcs	Remarks
IC27		N74F02D	IC	1	
IC28-35		MB8464A80LPF	IC	8	
IC36		MC74HC574F	IC	1	(R)
IC37		MSM76H012GSK	IC	1	
IC38-44		MB8464A80LPF	IC	7	
IC45		UPD65013FA44	IC	1	
IC46-48		MB40778PF	IC	3	
IC49		AN78L09	IC	1	
IC50		AN79L09	IC	1	
IC51		AN78N05	IC	1	
IC53		N74F109D	IC	1	
IC54,55		RC082BM	IC	2	
IC57		RC082BM	IC	1	
IC59		RC082BM	IC	1	
IC201		AN91A12S	IC	1	
IC202		MN53015VZW	IC	1	
IC203		UPD65024F152	IC	1	
IC204		UPD65040F144	IC	1	
IC205		NE521D	IC	1	
IC206,07		MN74HC221S	IC	2	
IC208		MC74HC32AF	IC	1	
IC209		MC14053BF	IC	1	(R)
IC210		RC082BM	IC	1	
IC211		NE521D	IC	1	
IC212		MC74HC04AF	IC	1	
IC213		MC74HC125AF	IC	1	
IC214		MC74HC02AF	IC	1	
IC216,17		UPC4082G	IC	2	
IC218		DN74LS04NS	IC	1	
IC220		MC74HC74AF	IC	1	
IC221,22		RC082BM	IC	2	
IC223		MC74HC04AF	IC	1	
IC224		MC74HC08AF	IC	1	
IC225,26		MC74HC04AF	IC	2	
IC228		AN78L09	IC	1	
IC229		AN79L05	IC	1	
IC230		AN78L09	IC	1	
IC231-33		AN78L05	IC	3	
IC401		MC74HC86F	IC	1	
IC402		SN74LS221NS	IC	1	
IC403		MC74HC00AF	IC	1	
IC405		UPD65022B264	IC	1	
IC409		MC74HC00AF	IC	1	
IC410		SN75452BPS	IC	1	
IC411		UPC319G2	IC	1	
IC412		MC74HC04AF	IC	1	
IC413		SN74LS123NS	IC	1	
IC415		SN74LS123NS	IC	1	
IC416		UPD65022C252	IC	1	
IC418		SN74LS123NS	IC	1	
IC419		MC74HC4053F	IC	1	
IC420,21		RC082BM	IC	2	
IC422		AN79L05	IC	1	
IC423		AN78L05	IC	1	
IC424		MC1648P	IC	1	
IC425		MC10125L	IC	1	
IC426		N74F86D	IC	1	
IC427,28		N74F109D	IC	2	
IC429		SN74LS221NS	IC	1	
IC430		AN79L05	IC	1	
IC431		AN79L09	IC	1	
IC432		AN78L09	IC	1	
IC433		SN74LS123NS	IC	1	
IC434		SN74LS221NS	IC	1	
IC435		RC082BM	IC	1	
IC436		MC74HC4053F	IC	1	
IC437		AN78L05	IC	1	
IC438		UPC358G2	IC	1	
IC439		SN74LS624NS	IC	1	
IC441		MC74HC74AF	IC	1	
IC442		MC74HC125AF	IC	1	
IC443		MC74HC00AF	IC	1	
IC444		RC082BM	IC	1	
IC445		NE521D	IC	1	
IC446		MC74HC00AF	IC	1	

Refer to the P.C.BOARDS LIST, page 6-1-1, before using this page.

Ref.No.	Part No.	Part Name & Description	Pcs	Remarks
IC470	UPD65022F258	IC	1	
IC471	N74F04D	IC	1	
IC472	SN74LS04NS	IC	1	
IC473	MC74HC164F	IC	1	
IC474	AN79L09	IC	1	
IC475	AN78L09	IC	1	
IC476	AN79L05	IC	1	
IC477	N74F157AD	IC	1	
IC478	MC74HC00AF	IC	1	
IC479	UPD65025B030	IC	1	
IC480	AN78L05	IC	1	
IC481	RC082BM	IC	1	
L1-L8	VLP0017	COIL	8	
L201	VLQEL05S101J	COIL 100UH	1	
L202	VLQEL05S221J	COIL 220UH	1	
L203	VLQEL05S680J	COIL 68UH	1	
L204	VLQEL05S221J	COIL 220UH	1	
L205	VLQEL05S470J	COIL 47UH	1	
L404	VLQ0211M1R8	COIL 1.8UH	1	
Q201	UN2212	TRANSISTOR-RESISTOR	1	
Q202	2SB709	TRANSISTOR CHIP	1	(Q,R)
Q203,04	2SK606	TRANSISTOR	2	
Q402,03	2SD601	TRANSISTOR CHIP	2	(Q,R)
Q404-06	2SB709	TRANSISTOR CHIP	3	(Q,R)
Q408	2SB709	TRANSISTOR CHIP	1	(Q,R)
		RESISTORS		
R1	ERJ6GEYJ101	M.RESISTOR CH 1/10W 100	1	
R2	ERJ6GEYG472	M.RESISTOR CH1/10W 4.7K	1	
R3,R4	ERJ6GEYG103	M.RESISTOR CH 1/10W 10K	2	
R5	ERJ6GEYG270	M.RESISTOR CH 1/10W 27	1	
R6,R7	ERJ6GEYJ393	M.RESISTOR CH 1/10W 39K	2	
R11,12	ERJ6GEYJ272	M.RESISTOR CH 1/10W 2.7K	2	
R13	ERJ6GEYG270	M.RESISTOR CH 1/10W 27	1	
R14	ERJ6GEYG103	M.RESISTOR CH 1/10W 10K	1	
R16	ERJ6GEY0R00	M.RESISTOR CH 1/10W 0	1	
R18	ERJ6GEY0R00	M.RESISTOR CH 1/10W 0	1	
R19,20	ERJ6GEYJ272	M.RESISTOR CH 1/10W 2.7K	2	
R21	ERJ6GEY0R00	M.RESISTOR CH 1/10W 0	1	
R22	ERJ6GEYG270	M.RESISTOR CH 1/10W 27	1	
R23	ERJ6GEY0R00	M.RESISTOR CH 1/10W 0	1	
R25	ERJ6GEY0R00	M.RESISTOR CH 1/10W 0	1	
R28,29	ERJ6GEYG103	M.RESISTOR CH 1/10W 10K	2	
R30	ERJ6GEYG182	M.RESISTOR CH 1/10W 1.8K	1	
R31	ERJ6GEYG103	M.RESISTOR CH 1/10W 10K	1	
R34,35	ERJ6GEYJ101	M.RESISTOR CH 1/10W 100	2	
R36-40	ERJ6GEYJ393	M.RESISTOR CH 1/10W 39K	5	
R42,43	ERJ6GEYJ105	M.RESISTOR CH 1/10W 1M	2	
R45	ERJ6GEY0R00	M.RESISTOR CH 1/10W 0	1	
R47-50	ERJ6GEYJ393	M.RESISTOR CH 1/10W 39K	4	
R51,52	ERJ6GEYG472	M.RESISTOR CH1/10W 4.7K	2	
R53	ERJ6GEYG223	M.RESISTOR CH 1/10W 22K	1	
R55	ERJ6GEYG682	M.REISITOR CH 1/10W 6.8K	1	
R57	ERJ6GEYG682	M.REISITOR CH 1/10W 6.8K	1	
R58	ERJ6GEY0R00	M.RESISTOR CH 1/10W 0	1	
R60	ERJ6GEYG152	M.RESISTOR CH 1/10W 1.5K	1	
R61	ERJ6GEYG102	M.RESISTOR CH 1/10W 1K	1	
R62	ERJ6GEYG182	M.RESISTOR CH 1/10W 1.8K	1	
R63	ERJ6GEYG472	M.RESISTOR CH1/10W 4.7K	1	
R64	ERJ6GEYG152	M.RESISTOR CH 1/10W 1.5K	1	
R65	ERJ6GEYG472	M.RESISTOR CH1/10W 4.7K	1	
R66	ERJ6GEYG102	M.RESISTOR CH 1/10W 1K	1	
R67	ERJ6GEYG152	M.RESISTOR CH 1/10W 1.5K	1	
R68	ERJ6GEYG472	M.RESISTOR CH1/10W 4.7K	1	
R69	ERJ6GEYG102	M.RESISTOR CH 1/10W 1K	1	
R70	ERJ6GEYJ393	M.RESISTOR CH 1/10W 39K	1	
R201	ERJ6GEYJ224	M.RESISTOR CH 1/10W 220K	1	

Ref.No.	Part No.	Part Name & Description	Pcs	Remarks
R202	ERJ6GEYJ684	M.RESISTOR CH 1/10W 680K	1	
R203	ERJ6GEYJ103	M.RESISTOR CH 1/10W 10K	1	
R204,05	ERJ6GEYJ822	M.RESISTOR CH 1/10W 8.2K	2	
R206-10	ERJ6GEYJ222	M.RESISTOR CH 1/10W 2.2K	5	
R211	ERJ6GEYJ683	M.RESISTOR CH 1/10W 68K	1	
R212	ERJ6GEYJ222	M.RESISTOR CH 1/10W 2.2K	1	
R213,14	ERJ6GEYJ103	M.RESISTOR CH 1/10W 10K	2	
R215	ERJ6GEYJ333	M.RESISTOR CH 1/10W 33K	1	
R216	ERJ6GEYJ682	M.RESISTOR CH 1/10W 6.8K	1	
R217	ERJ6GEYJ103	M.RESISTOR CH 1/10W 10K	1	
R218	ERJ6GEYJ563	M.RESISTOR CH 1/10W 56K	1	
R219	ERJ6GEYJ681	M.RESISTOR CH 1/10W 680	1	
R220	ERJ6GEYJ184	M.RESISTOR CH1/10W 180K	1	
R221	ERJ6GEYJ392	M.RESISTOR CH 1/10W 3.9K	1	
R222,23	ERJ6GEYJ102	M.RESISTOR CH 1/10W 1K	2	
R224	ERJ6GEYJ222	M.RESISTOR CH 1/10W 2.2K	1	
R225	ERJ6GEYJ152	M.RESISTOR CH 1/10W 1.5K	1	
R226	ERJ6GEYJ333	M.RESISTOR CH 1/10W 33K	1	
R227	ERJ6GEYJ273	M.RESISTOR CH1/10W 27K	1	
R228	ERJ6GEYJ223	M.RESISTOR CH 1/10W 22K	1	
R229	ERJ6GEYJ105	M.RESISTOR CH 1/10W 1M	1	
R230	ERJ6GEYJ102	M.RESISTOR CH 1/10W 1K	1	
R231	ERJ6GEYJ473	M.RESISTOR CH 1/10W 47K	1	
R232	ERJ6GEYJ123	M.RESISTOR CH1/10W 12K	1	
R233	ERJ6GEYJ103	M.RESISTOR CH 1/10W 10K	1	
R234,35	ERJ6GEYJ473	M.RESISTOR CH 1/10W 47K	2	
R236,37	ERJ6GEYJ332	M.RESISTOR CH 1/10W 3.3K	2	
R238,39	ERJ6GEYJ102	M.RESISTOR CH 1/10W 1K	2	
R240	ERJ6GEYJ103	M.RESISTOR CH 1/10W 10K	1	
R241	ERJ6GEYJ221	M.RESISTOR CH 1/10W 220	1	
R247	ERJ6GEYJ332	M.RESISTOR CH 1/10W 3.3K	1	
R248	ERJ6GEYJ822	M.RESISTOR CH 1/10W 8.2K	1	
R249	ERJ6GEYJ821	M.RESISTOR CH 1/10W 820	1	
R250	ERJ6GEYJ152	M.RESISTOR CH 1/10W 1.5K	1	
R251-60	ERJ6GEYJ393	M.RESISTOR CH 1/10W 39K	10	
R261	ERJ6GEYJ473	M.RESISTOR CH 1/10W 47K	1	
R262-64	ERJ6GEYJ223	M.RESISTOR CH 1/10W 22K	3	
R265	ERJ6GEYJ104	M.RESISTOR CH 1/10W 100K	1	
R266	ERJ6GEYJ122	M.RESISTOR CH1/10W 1.2K	1	
R267	ERJ6GEYJ823	M.RESISTOR CH 1/10W 82K	1	
R268	ERJ6GEYJ123	M.RESISTOR CH1/10W 12K	1	
R269	ERJ6GEYJ153	M.RESISTOR CH 1/10W 15K	1	
R270	ERJ6GEYJ223	M.RESISTOR CH 1/10W 22K	1	
R272	ERJ6GEYJ473	M.RESISTOR CH 1/10W 47K	1	
R273	ERJ6GEYJ105	M.RESISTOR CH 1/10W 1M	1	
R274	ERJ6GEYJ104	M.RESISTOR CH 1/10W 100K	1	
R275	ERJ6GEYJ682	M.RESISTOR CH 1/10W 6.8K	1	
R276	ERJ6GEYJ103	M.RESISTOR CH 1/10W 10K	1	
R277	ERJ6GEYJ333	M.RESISTOR CH 1/10W 33K	1	
R278	ERJ6GEYJ823	M.RESISTOR CH 1/10W 82K	1	
R279	ERJ6GEYJ822	M.RESISTOR CH 1/10W 8.2K	1	
R280	ERJ6GEYJ682	M.RESISTOR CH 1/10W 6.8K	1	
R281	ERJ6GEY0R00	M.RESISTOR CH 1/10W 0	1	
R282	ERJ6GEYJ471	M.RESISTOR CH 1/10W 470	1	
R283	ERJ6GEYJ473	M.RESISTOR CH 1/10W 47K	1	
R286	ERJ6GEYJ183	M.RESISTOR CH 1/10W 18K	1	
R287	ERJ6GEYJ153	M.RESISTOR CH 1/10W 15K	1	
R288	ERJ6GEYJ105	M.RESISTOR CH 1/10W 1M	1	
R289	ERJ6GEYJ223	M.RESISTOR CH 1/10W 22K	1	
R290	ERJ6GEYJ102	M.RESISTOR CH 1/10W 1K	1	
R291	ERJ6GEYJ471	M.RESISTOR CH 1/10W 470	1	
R292	ERJ6GEYJ473	M.RESISTOR CH 1/10W 47K	1	
R293	ERJ6GEYJ822	M.RESISTOR CH 1/10W 8.2K	1	
R294	ERJ6GEYJ103	M.RESISTOR CH 1/10W 10K	1	
R295	ERJ6GEYJ105	M.RESISTOR CH 1/10W 1M	1	
R296	ERJ6GEYJ223	M.RESISTOR CH 1/10W 22K	1	
R297	ERJ6GEYJ102	M.RESISTOR CH 1/10W 1K	1	
R298-00	ERJ6GEYJ223	M.RESISTOR CH 1/10W 22K	3	
R301	ERJ6GEYJ101	M.RESISTOR CH 1/10W 100	1	
R352	ERJ6GEY0R00	M.RESISTOR CH 1/10W 0	1	
R354	ERJ6GEY0R00	M.RESISTOR CH 1/10W 0	1	
R357,58	ERJ6GEY0R00	M.RESISTOR CH 1/10W 0	2	
R361	ERJ6GEY0R00	M.RESISTOR CH 1/10W 0	1	
R366-68	ERJ6GEY0R00	M.RESISTOR CH 1/10W 0	3	
R375	ERJ6GEY0R00	M.RESISTOR CH 1/10W 0	1	

Refer to the P.C.BOARDS LIST, page 6-1-1, before using this page.

Ref.No.		Part No.	Part Name & Description	Pcs	Remarks
R379		ERJ6GEY0R00	M.RESISTOR CH 1/10W 0	1	
R401		ERJ6GEYJ103	M.RESISTOR CH 1/10W 10K	1	
R402		ERJ6GEYJ102	M.RESISTOR CH 1/10W 1K	1	
R403		ERJ6GEYJ393	M.RESISTOR CH 1/10W 39K	1	
R404		ERJ6GEYJ472	M.RESISTOR CH 1/10W 4.7K	1	
R405		ERJ6GEYJ562	M.RESISTOR CH 1/10W 5.6K	1	
R406		ERJ6GEYJ103	M.RESISTOR CH 1/10W 10K	1	
R407		ERDS2TJ334	C.RESISTOR 1/4W 330K	1	
R408		ERJ6GEYJ183	M.RESISTOR CH 1/10W 18K	1	
R409		ERJ6GEYJ681	M.RESISTOR CH 1/10W 680	1	
R410		ERJ6GEYJ682	M.RESISTOR CH 1/10W 6.8K	1	
R411-17		ERJ6GEYJ393	M.RESISTOR CH 1/10W 39K	7	
R418,19		ERJ6GEYJ101	M.RESISTOR CH 1/10W 100	2	
R420		ERJ6GEYJ103	M.RESISTOR CH 1/10W 10K	1	
R421,22		ERJ6GEYJ392	M.RESISTOR CH 1/10W 3.9K	2	
R423		ERJ6GEYJ562	M.RESISTOR CH 1/10W 5.6K	1	
R424		ERJ6GEYJ272	M.RESISTOR CH 1/10W 2.7K	1	
R425		ERJ6GEYJ562	M.RESISTOR CH 1/10W 5.6K	1	
R426		ERJ6GEYJ392	M.RESISTOR CH 1/10W 3.9K	1	
R427		ERJ6GEYJ272	M.RESISTOR CH 1/10W 2.7K	1	
R428		ERJ6GEYJ563	M.RESISTOR CH 1/10W 56K	1	
R429		ERJ6GEYJ562	M.RESISTOR CH 1/10W 5.6K	1	
R430		ERJ6GEYJ103	M.RESISTOR CH 1/10W 10K	1	
R431		ERJ6GEYJ183	M.RESISTOR CH 1/10W 18K	1	
R432		ERJ6GEYJ681	M.RESISTOR CH 1/10W 680	1	
R433		ERJ6GEYJ393	M.RESISTOR CH 1/10W 39K	1	
R434		ERJ6GEYJ471	M.RESISTOR CH 1/10W 470	1	
R435		ERJ6GEYJ273	M.RESISTOR CH1/10W 27K	1	
R436		ERJ6GEYJ823	M.RESISTOR CH 1/10W 82K	1	
R439-41		ERJ6GEY0R00	M.RESISTOR CH 1/10W 0	3	
R443		ERJ6GEY0R00	M.RESISTOR CH 1/10W 0	1	
R445		ERJ6GEYJ152	M.RESISTOR CH 1/10W 1.5K	1	
R446		ERJ6GEYJ392	M.RESISTOR CH 1/10W 3.9K	1	
R447		ERJ6GEYJ562	M.RESISTOR CH 1/10W 5.6K	1	
R448		ERJ6GEY0R00	M.RESISTOR CH 1/10W 0	1	
R450		ERJ6GEYJ393	M.RESISTOR CH 1/10W 39K	1	
R451		ERJ6GEYJ471	M.RESISTOR CH 1/10W 470	1	
R452		ERJ6GEYJ682	M.RESISTOR CH 1/10W 6.8K	1	
R453		ERJ6GEYJ183	M.RESISTOR CH 1/10W 18K	1	
R454,55		ERJ6GEY0R00	M.RESISTOR CH 1/10W 0	2	
R456		ERJ6GEYJ563	M.RESISTOR CH 1/10W 56K	1	
R457		ERJ6GEYJ472	M.RESISTOR CH 1/10W 4.7K	1	
R461		ERJ6GEYJ273	M.RESISTOR CH1/10W 27K	1	
R462		ERJ6GEYJ101	M.RESISTOR CH 1/10W 100	1	
R464		ERJ6GEYJ562	M.RESISTOR CH 1/10W 5.6K	1	
R465		ERJ6GEYJ183	M.RESISTOR CH 1/10W 18K	1	
R466,67		ERJ6GEYJ182	M.RESISTOR CH 1/10W 1.8K	2	
R468		ERJ6GEYJ153	M.RESISTOR CH 1/10W 15K	1	
R469		ERJ6GEYJ681	M.RESISTOR CH 1/10W 680	1	
R470		ERJ6GEYJ123	M.RESISTOR CH1/10W 12K	1	
R471		ERJ6GEYJ821	M.RESISTOR CH 1/10W 820	1	
R472		ERJ6GEYJ153	M.RESISTOR CH 1/10W 15K	1	
R473		ERJ6GEYJ182	M.RESISTOR CH 1/10W 1.8K	1	
R474		ERJ6GEYJ153	M.RESISTOR CH 1/10W 15K	1	
R475,76		ERJ6GEYJ332	M.RESISTOR CH 1/10W 3.3K	2	
R477		ERJ6GEYJ222	M.RESISTOR CH 1/10W 2.2K	1	
R478		ERJ6GEYJ562	M.RESISTOR CH 1/10W 5.6K	1	
R480		ERJ6GEYJ273	M.RESISTOR CH1/10W 27K	1	
R481		ERJ6GEYJ153	M.RESISTOR CH 1/10W 15K	1	
R482		ERJ6GEYJ682	M.RESISTOR CH 1/10W 6.8K	1	
R483		ERJ6GEYJ152	M.RESISTOR CH 1/10W 1.5K	1	
R484,85		ERJ6GEYJ102	M.RESISTOR CH 1/10W 1K	2	
R486,87		ERJ6GEYJ103	M.RESISTOR CH 1/10W 10K	2	
R488		ERJ6GEYJ123	M.RESISTOR CH1/10W 12K	1	
R489		ERJ6GEYJ183	M.RESISTOR CH 1/10W 18K	1	
R491		ERJ6GEY0R00	M.RESISTOR CH 1/10W 0	1	
R494		ERJ6GEY0R00	M.RESISTOR CH 1/10W 0	1	
R497		ERJ6GEY0R00	M.RESISTOR CH 1/10W 0	1	
R498		ERJ6GEYJ562	M.RESISTOR CH 1/10W 5.6K	1	
R499		ERJ6GEYJ472	M.RESISTOR CH 1/10W 4.7K	1	
R502		ERJ6GEYJ152	M.RESISTOR CH 1/10W 1.5K	1	
R503,04		ERJ6GEYJ102	M.RESISTOR CH 1/10W 1K	2	
R524		ERJ6GEYJ152	M.RESISTOR CH 1/10W 1.5K	1	
R525		ERJ6GEYJ101	M.RESISTOR CH 1/10W 100	1	
R529		ERJ6GEY0R00	M.RESISTOR CH 1/10W 0	1	

Ref.No.		Part No.	Part Name & Description	Pcs	Remarks
R530		ERJ6GEYJ102	M.RESISTOR CH 1/10W 1K	1	
R531		ERJ6GEYJ101	M.RESISTOR CH 1/10W 100	1	
R532		ERJ6GEY0R00	M.RESISTOR CH 1/10W 0	1	
R569		ERJ6GEYJ562	M.RESISTOR CH 1/10W 5.6K	1	
RA1,A2		EXBF9E332J	COMBI.R-R 33K	2	
RA4-A9		EXBF9E332J	COMBI.R-R 33K	6	
RA10-18		EXBF9E332J	COMBI.R-R 33K	9	
SW7		VSS0126	SWITCH	1	
SW201		VSS0126	SWITCH	1	
SW203		VSR0045	SWITCH	1	
TP1,P2		VJR0582	PACK PIN	2	
TP201-08		VJR0582	PACK PIN	8	
TP210-15		VJR0582	PACK PIN	6	
TP412,13		VJR0582	PACK PIN	2	
TP416,17		VJR0582	PACK PIN	2	
TP422-27		VJR0582	PACK PIN	6	
TPG201		VJR0582	PACK PIN	1	
TPG401,02		VJR0582	PACK PIN	2	
VR1		VRV0109B103	V.RESISTOR 10K	1	
VR2		VRV0109B202	V.RESISTOR 2K	1	
VR201		VRV0109B203	V.RESISTOR 20K	1	
VR202		VRV0109B103	V.RESISTOR 10K	1	
VR203		VRV0064B202	V.RESISTOR 2K	1	
VR204		VRV0064B502	V.RESISTOR 5K	1	
VR205		VRV0109B502	V.RESISTOR 5K	1	
VR207		VRV0064B502	V.RESISTOR 5K	1	
VR401,02		VRV0109B502	V.RESISTOR 5K	2	
VR403		VRV0109B202	V.RESISTOR 2K	1	
VR405,06		VRV0064B502	V.RESISTOR 5K	2	
VR408		VRV0109B202	V.RESISTOR 2K	1	
VR409		VRV0109B502	V.RESISTOR 5K	1	
X201		VSX0081	CRYSTAL OSCILLATOR	1	
X202		VSX0338	CRYSTAL OSCILLATOR	1	
X203,04		VSX0280	CRYSTAL OSCILLATOR	2	
X501		VSX0211	CRYSTAL OSCILLATOR	1	
			MISCELLANEOUS		
		VML2143	CARD PULLER	1	
		VML2144	CARD PULLER	1	
		VMS4174	PIN	6	
		VMZ1547	BARRIER	1	
		VSC3056	SHIELD CASE	1	
		VXA3966	P.C.B. SHIELD PLATE	1	
		XNG26E	NUT	4	
		XWGV25D5G	NUT	4	
		XYNV3+K6FR	SCREW	6	
		XYN26+C12	SCREW	4	

Refer to the P.C.BOARDS LIST, page 6-1-1, before using this page.

Ref.No.		Part No.	Part Name & Description	Pcs	Remarks
	■	VEP88062C	P.C.BOARD W/COMPONENT		
			W1 TBC & SYNCGEN		
			CAPACITORS		
C1		ECUM1E104ZFN	C.CAPACITOR CH 25V 0.1U	1	
C2		ECEA0JU101	E.CAPACITOR 6.3V 100U	1	
C3		ECUM1E104ZFN	C.CAPACITOR CH 25V 0.1U	1	
C4		ECEA0JU101	E.CAPACITOR 6.3V 100U	1	
C5		ECUM1E104ZFN	C.CAPACITOR CH 25V 0.1U	1	
C6		ECEA1CU101	E.CAPACITOR 16V 100U	1	
C7		ECUM1E104ZFN	C.CAPACITOR CH 25V 0.1U	1	
C8		ECEA1CU101	E.CAPACITOR 16V 100U	1	
C9		ECUM1E104ZFN	C.CAPACITOR CH 25V 0.1U	1	
C10		ECEA1AU101	E.CAPACITOR 10V 100U	1	
C11		ECUM1E104ZFN	C.CAPACITOR CH 25V 0.1U	1	
C12		ECEA1CU101	E.CAPACITOR 16V 100U	1	
C13		ECUM1E104ZFN	C.CAPACITOR CH 25V 0.1U	1	
C14		ECEA1AU101	E.CAPACITOR 10V 100U	1	
C15,16		ECUM1E104ZFN	C.CAPACITOR CH 25V 0.1U	2	
C17		ECUM1C104KBN	C.CAPACITOR CH 16V 0.1U	1	
C18-22		ECUM1E104ZFN	C.CAPACITOR CH 25V 0.1U	5	
C23		ECEA1CU220	E.CAPACITOR 16V 22U	1	
C24		ECUM1E104ZFN	C.CAPACITOR CH 25V 0.1U	1	
C25		ECEA1HU2R2	E.CAPACITOR 50V 2.2U	1	
C26		ECEA1CU220	E.CAPACITOR 16V 22U	1	
C27		ECUM1E104ZFN	C.CAPACITOR CH 25V 0.1U	1	
C28		ECEA1CU220	E.CAPACITOR 16V 22U	1	
C29-33		ECUM1E104ZFN	C.CAPACITOR CH 25V 0.1U	5	
C34		ECEA1HU2R2	E.CAPACITOR 50V 2.2U	1	
C35		ECEA1CU220	E.CAPACITOR 16V 22U	1	
C36		ECUM1E104ZFN	C.CAPACITOR CH 25V 0.1U	1	
C37		ECEA1AU221	E.CAPACITOR 10V 220U	1	
C38		ECEA1HU2R2	E.CAPACITOR 50V 2.2U	1	
C39		ECUM1E104ZFN	C.CAPACITOR CH 25V 0.1U	1	
C40		ECEA0JU101	E.CAPACITOR 6.3V 100U	1	
C41-48		ECUM1C104KBN	C.CAPACITOR CH 16V 0.1U	8	
C49-52		ECUM1E104ZFN	C.CAPACITOR CH 25V 0.1U	4	
C53		ECUM1C104KBN	C.CAPACITOR CH 16V 0.1U	1	
C57,58		ECUM1H101JCN	C.CAPACITOR CH 50V 100P	2	
C59,60		ECUM1C104KBN	C.CAPACITOR CH 16V 0.1U	2	
C61-64		ECUM1E104ZFN	C.CAPACITOR CH 25V 0.1U	4	
C65		ECUM1C104KBN	C.CAPACITOR CH 16V 0.1U	1	
C66		ECUM1E104ZFN	C.CAPACITOR CH 25V 0.1U	1	
C67-73		ECUM1C104KBN	C.CAPACITOR CH 16V 0.1U	7	
C74-78		ECUM1E104ZFN	C.CAPACITOR CH 25V 0.1U	5	
C79		ECEA1CU220	E.CAPACITOR 16V 22U	1	
C81		ECQV1H474JZ	P.CAPACITOR 50V 0.47U	1	
C201		ECEA1AU470	E.CAPACITOR 10V 47U	1	
C202,03		ECUM1H103KBN	C.CAPACITOR CH 50V 0.01U	2	
C204		ECUM1H181JCN	C.CAPACITOR CH 50V 180P	1	
C205		ECUM1H103KBN	C.CAPACITOR CH 50V 0.01U	1	
C206		ECUM1H180JCN	C.CAPACITOR CH 50V 18P	1	
C207		ECUM1H680JCN	C.CAPACITOR CH 50V 68P	1	
C208,09		ECUM1C104KBN	C.CAPACITOR CH 16V 0.1U	2	
C210		ECEA1HN010S	E.CAPACITOR 50V 1U	1	
C211		ECUM1E104ZFN	C.CAPACITOR CH 25V 0.1U	1	
C212		ECEA1CU470	E.CAPACITOR 16V 47U	1	
C213		ECUM1H330JCN	C.CAPACITOR CH 50V 33P	1	
C214		ECUM1H101JCN	C.CAPACITOR CH 50V 100P	1	
C215		ECUM1H181JCN	C.CAPACITOR CH 50V 180P	1	
C216		ECUM1H101JCN	C.CAPACITOR CH 50V 100P	1	
C217		ECUM1H220JCN	C.CAPACITOR CH 50V 22P	1	
C218		ECUM1H470JCN	C.CAPACITOR CH 50V 47P	1	
C219-22		ECUM1E104ZFN	C.CAPACITOR CH 25V 0.1U	4	
C225		ECUM1H820JCN	C.CAPACITOR CH 50V 82P	1	
C226		ECEA1CU100	E.CAPACITOR 16V 10U	1	
C227		ECEA1CU470	E.CAPACITOR 16V 47U	1	
C228		ECUM1E104ZFN	C.CAPACITOR CH 25V 0.1U	1	

Ref.No.		Part No.	Part Name & Description	Pcs	Remarks
C229		ECUM1H103KBN	C.CAPACITOR CH 50V 0.01U	1	
C230		ECUM1E104ZFN	C.CAPACITOR CH 25V 0.1U	1	
C231		ECEA1HN2R2S	E.CAPACITOR 50V 2.2U	1	
C232		ECUM1E104ZFN	C.CAPACITOR CH 25V 0.1U	1	
C233		ECUM1H270JCN	C.CAPACITOR CH 50V 27P	1	
C234		ECV1ZW20X53T	V.CAPACITOR 20P	1	
C235		ECUM1H102JCN	C.CAPACITOR CH 50V 1000P	1	
C236		ECUM1E104ZFN	C.CAPACITOR CH 25V 0.1U	1	
C237		ECEA1CU100	E.CAPACITOR 16V 10U	1	
C238		ECUM1H150JCN	C.CAPACITOR CH 50V 15P	1	
C239		ECUM1H220JCN	C.CAPACITOR CH 50V 22P	1	
C240		ECUM1H103KBN	C.CAPACITOR CH 50V 0.01U	1	
C241,42		ECUM1E104ZFN	C.CAPACITOR CH 25V 0.1U	2	
C243		ECUM1C104KBN	C.CAPACITOR CH 16V 0.1U	1	
C244-46		ECUM1E104ZFN	C.CAPACITOR CH 25V 0.1U	3	
C247		ECUM1H390JCN	C.CAPACITOR CH 50V 39P	1	
C248		ECUM1E104ZFN	C.CAPACITOR CH 25V 0.1U	1	
C250		ECEA1CU470	E.CAPACITOR 16V 47U	1	
C251		ECEA1AU470	E.CAPACITOR 10V 47U	1	
C252		ECUM1E104ZFN	C.CAPACITOR CH 25V 0.1U	1	
C253		ECEA1CU100	E.CAPACITOR 16V 10U	1	
C254,55		ECUM1E104ZFN	C.CAPACITOR CH 25V 0.1U	2	
C256		ECUM1H103KBN	C.CAPACITOR CH 50V 0.01U	1	
C257		ECUM1E104ZFN	C.CAPACITOR CH 25V 0.1U	1	
C258		ECEA1HN010S	E.CAPACITOR 50V 1U	1	
C259		ECUM1E104ZFN	C.CAPACITOR CH 25V 0.1U	1	
C260		ECEA1AU470	E.CAPACITOR 10V 47U	1	
C261		ECUM1E104ZFN	C.CAPACITOR CH 25V 0.1U	1	
C262		ECEA1AU470	E.CAPACITOR 10V 47U	1	
C263		ECUM1E104ZFN	C.CAPACITOR CH 25V 0.1U	1	
C264		ECEA1CN100S	E.CAPACITOR 16V 10U	1	
C265		ECUM1H102JCN	C.CAPACITOR CH 50V 1000P	1	
C266		ECUM1H150JCN	C.CAPACITOR CH 50V 15P	1	
C267,68		ECUM1E104ZFN	C.CAPACITOR CH 25V 0.1U	2	
C270		ECUM1H103KBN	C.CAPACITOR CH 50V 0.01U	1	
C271-73		ECUM1E104ZFN	C.CAPACITOR CH 25V 0.1U	3	
C274		ECUM1C104KBN	C.CAPACITOR CH 16V 0.1U	1	
C275		ECUM1H102JCN	C.CAPACITOR CH 50V 1000P	1	
C276		ECUM1H104ZFN	C.CAPACITOR CH 50V 0.1U	1	
C277		ECEA1AU470	E.CAPACITOR 10V 47U	1	
C279		ECUM1H103KBN	C.CAPACITOR CH 50V 0.01U	1	
C280,81		ECUM1E104ZFN	C.CAPACITOR CH 25V 0.1U	2	
C282		ECUM1C104KBN	C.CAPACITOR CH 16V 0.1U	1	
C283		ECUM1H102JCN	C.CAPACITOR CH 50V 1000P	1	
C284		ECUM1E104ZFN	C.CAPACITOR CH 25V 0.1U	1	
C286-91		ECUM1E104ZFN	C.CAPACITOR CH 25V 0.1U	6	
C401		ECQM1H222JF	P.CAPACITOR 50V 2200P	1	
C402		ECQM1H223JF	P.CAPACITOR 50V 0.022U	1	
C403		ECQM1H222JF	P.CAPACITOR 50V 2200P	1	
C406		ECQM1H102JF	P.CAPACITOR 50V 1000P	1	
C407,08		ECCF1H221JC	C.CAPACITOR 50V 220P	2	
C409		ECUM1E104ZFN	C.CAPACITOR CH 25V 0.1U	1	
C410,11		ECUM1H820JCN	C.CAPACITOR CH 50V 82P	2	
C412		ECUM1E104ZFN	C.CAPACITOR CH 25V 0.1U	1	
C413		ECUM1H820JCN	C.CAPACITOR CH 50V 82P	1	
C414-18		ECUM1E104ZFN	C.CAPACITOR CH 25V 0.1U	5	
C423		ECUM1H391JCN	C.CAPACITOR CH 50V 390P	1	
C424		ECUM1E104ZFN	C.CAPACITOR CH 25V 0.1U	1	
C425		ECQM1H102JF	P.CAPACITOR 50V 1000P	1	
C426		ECUM1H221JCN	C.CAPACITOR CH 50V 220P	1	
C427		ECQM1H102JF	P.CAPACITOR 50V 1000P	1	
C438		ECUM1H681JCN	C.CAPACITOR CH 50V 680P	1	
C441		ECQM1H102JF	P.CAPACITOR 50V 1000P	1	
C442		ECUM1H221JCN	C.CAPACITOR CH 50V 220P	1	
C443,44		ECUM1E104ZFN	C.CAPACITOR CH 25V 0.1U	2	
C450		ECQM1H103JF	P.CAPACITOR 50V 0.01U	1	
C452		ECUM1H151JCN	C.CAPACITOR CH 50V 150P	1	
C453		ECQM1H223JF	P.CAPACITOR 50V 0.022U	1	
C454		ECQM1H122JF	P.CAPACITOR 50V 1200P	1	
C455		ECQM1H104JF	P.CAPACITOR 50V 0.1U	1	
C456		ECEA1CN100S	E.CAPACITOR 16V 10U	1	
C457		ECUM1H561JCN	C.CAPACITOR CH 50V 560P	1	
C458		ECUM1E104ZFN	C.CAPACITOR CH 25V 0.1U	1	
C459		ECEA1AU220	E.CAPACITOR 10V 22U	1	
C460,61		ECUM1H101JCN	C.CAPACITOR CH 50V 100P	2	

Refer to the P.C.BOARDS LIST, page 6-1-1, before using this page.

Ref.No.		Part No.	Part Name & Description	Pcs	Remarks
C462		ECUM1E104ZFN	C.CAPACITOR CH 25V 0.1U	1	
C463		ECEA1AU220	E.CAPACITOR 10V 22U	1	
C464		ECUM1H103ZFN	C.CAPACITOR CH 50V 0.01U	1	
C465		ECUM1H560JCN	C.CAPACITOR CH 50V 56P	1	
C467		ECUM1E104ZFN	C.CAPACITOR CH 25V 0.1U	1	
C468		ECEA1AU220	E.CAPACITOR 10V 22U	1	
C469,70		ECUM1E104ZFN	C.CAPACITOR CH 25V 0.1U	2	
C471		ECUM1H151JCN	C.CAPACITOR CH 50V 150P	1	
C473		ECUM1E104ZFN	C.CAPACITOR CH 25V 0.1U	1	
C474		ECEA1AU101	E.CAPACITOR 10V 100U	1	
C475		ECUM1E104ZFN	C.CAPACITOR CH 25V 0.1U	1	
C476		ECEA1CU101	E.CAPACITOR 16V 100U	1	
C477		ECUM1E104ZFN	C.CAPACITOR CH 25V 0.1U	1	
C478		ECEA1CU101	E.CAPACITOR 16V 100U	1	
C479		ECQM1H103JF	P.CAPACITOR 50V 0.01U	1	
C480		ECUM1H470JCN	C.CAPACITOR CH 50V 47P	1	
C481		ECUM1H181JCN	C.CAPACITOR CH 50V 180P	1	
C482		ECQM1H122JF	P.CAPACITOR 50V 1200P	1	
C483		ECQM1H103JF	P.CAPACITOR 50V 0.01U	1	
C484		ECUM1E104ZFN	C.CAPACITOR CH 25V 0.1U	1	
C485		ECEA1AU220	E.CAPACITOR 10V 22U	1	
C486		ECUM1E104ZFN	C.CAPACITOR CH 25V 0.1U	1	
C487		ECEA1HUR47	E.CAPACITOR 50V 0.47U	1	
C488		ECEA1HN010S	E.CAPACITOR 50V 1U	1	
C489		ECEA1HU2R2	E.CAPACITOR 50V 2.2U	1	
C490		ECUM1H330JCN	C.CAPACITOR CH 50V 33P	1	
C491		ECQM1H223JF	P.CAPACITOR 50V 0.022U	1	
C504		ECUM1H470JCN	C.CAPACITOR CH 50V 47P	1	
C514		ECUM1E104ZFN	C.CAPACITOR CH 25V 0.1U	1	
C517		ECUM1H470JCN	C.CAPACITOR CH 50V 47P	1	
C518-20		ECUM1E104ZFN	C.CAPACITOR CH 25V 0.1U	3	
C521		ECEA1CU101	E.CAPACITOR 16V 100U	1	
C522		ECUM1E104ZFN	C.CAPACITOR CH 25V 0.1U	1	
C523		ECEA1CU101	E.CAPACITOR 16V 100U	1	
C524		ECUM1E104ZFN	C.CAPACITOR CH 25V 0.1U	1	
C525		ECEA1AU101	E.CAPACITOR 10V 100U	1	
C528		ECEA1AU220	E.CAPACITOR 10V 22U	1	
C529		ECUM1E104ZFN	C.CAPACITOR CH 25V 0.1U	1	
C551		ECUM1E104ZFN	C.CAPACITOR CH 25V 0.1U	1	
C600-09		ECUM1E104ZFN	C.CAPACITOR CH 25V 0.1U	10	
C614,15		ECUM1E104ZFN	C.CAPACITOR CH 25V 0.1U	2	
D201		MA151WA	DIODE	1	
D202		MA335-R	DIODE	1	
D203		MA151K	DIODE	1	
D206-10		MA151K	DIODE	5	
D211		MA151WK	DIODE	1	
D212		MA151K	DIODE	1	
D402		MA151K	DIODE	1	
D404		MA153	DIODE	1	
D406		MA151K	DIODE	1	
D407		MA335-R	DIODE	1	
D408-10		MA151K	DIODE	3	
D416,17		MA151K	DIODE	2	
IC1,C2		CY7C128-45PC	IC	2	
IC4,C5		MC74HC574F	IC	2	
IC7		UPD65013F101	IC	1	
IC8		UPD41101C	IC	1	
IC9		MC74HC574F	IC	1	
IC10		MC74HC574F	IC	1	
IC11		MC74HC08AF	IC	1	
IC13,14		CY7C128-45PC	IC	2	
IC15,16		MC74HC574F	IC	2	
IC17		UPD65012F475	IC	1	
IC18,19		MC74HC574F	IC	2	
IC20		M74F02FP	IC	1	
IC21		M74F04FP	IC	1	
IC22		MC74HC574F	IC	1	
IC24		MSM77H021GSK	IC	1	
IC25		MSM71056	IC	1	

Ref.No.		Part No.	Part Name & Description	Pcs	Remarks
IC26		VSI0192	IC	1	
IC27		M74F02FP	IC	1	
IC28-35		MB8464A80LPF	IC	8	
IC36		MC74HC574F	IC	1	
IC37		MSM76H012GSK	IC	1	
IC38-44		MB8464A80LPF	IC	7	
IC45		UPD65013FA44	IC	1	
IC46-48		MB40778PF	IC	3	
IC49		AN78L09	IC	1	
IC50		AN79L09	IC	1	
IC51		AN78N05	IC	1	
IC53		M74F109FP	IC	1	
IC54,55		RC082BM	IC	2	
IC57		RC082BM	IC	1	
IC59		RC082BM	IC	1	
IC201		AN91A12S	IC	1	
IC202		MN53015VZW	IC	1	
IC203		UPD65024F152	IC	1	
IC204		UPD65040F144	IC	1	
IC205		NE521D	IC	1	
IC206,07		MN74HC221S	IC	2	
IC208		MC74HC32AF	IC	1	
IC209		MC14053BF	IC	1	(R)
IC210		RC082BM	IC	1	
IC211		NE521D	IC	1	
IC212		MC74HC04AF	IC	1	
IC213		MC74HC125AF	IC	1	
IC214		MC74HC02AF	IC	1	
IC216,17		UPC4082G	IC	2	
IC218		DN74LS04NS	IC	1	
IC220		MC74HC74AF	IC	1	
IC221,22		RC082BM	IC	2	
IC223		MC74HC04AF	IC	1	
IC224		MC74HC08AF	IC	1	
IC225,26		MC74HC04AF	IC	2	
IC228		AN78L09	IC	1	
IC229		AN79L05	IC	1	
IC230		AN78L09	IC	1	
IC231-33		AN78L05	IC	3	
IC401		MC74HC86F	IC	1	
IC402		SN74LS221NS	IC	1	
IC403		MC74HC00AF	IC	1	
IC404		MC74HC02AF	IC	1	
IC405		UPD65022B264	IC	1	
IC409		MC74HC00AF	IC	1	
IC410		SN75452BPS	IC	1	
IC411		UPC319G2	IC	1	
IC412		MC74HC04AF	IC	1	
IC413		SN74LS123NS	IC	1	
IC415		SN74LS123NS	IC	1	
IC416		UPD65022C252	IC	1	
IC418		SN74LS123NS	IC	1	
IC419		MC74HC4053F	IC	1	
IC420,21		RC082BM	IC	2	
IC422		AN79L05	IC	1	
IC423		AN78L05	IC	1	
IC424		MC1648P	IC	1	
IC425		MC10125L	IC	1	
IC426		M74F86FP	IC	1	
IC427,28		M74F109FP	IC	2	
IC429		SN74LS221NS	IC	1	
IC430		AN79L05	IC	1	
IC431		AN79L09	IC	1	
IC432		AN78L09	IC	1	
IC433		SN74LS123NS	IC	1	
IC434		SN74LS221NS	IC	1	
IC435		RC082BM	IC	1	
IC436		MC74HC4053F	IC	1	
IC437		AN78L05	IC	1	
IC438		UPC358G2	IC	1	
IC439		SN74LS624NS	IC	1	
IC441		MC74HC74AF	IC	1	
IC442		MC74HC125F	IC	1	
IC443		MC74HC00AF	IC	1	
IC444		RC082BM	IC	1	

Refer to the P.C.BOARDS LIST, page 6-1-1, before using this page.

Ref.No.	Part No.	Part Name & Description	Pcs	Remarks
IC445	NE521D	IC	1	
IC446	MC74HC00AF	IC	1	
IC470	UPD65022F258	IC	1	
IC471	M74F04FP	IC	1	
IC472	SN74LS04NS	IC	1	
IC473	MC74HC164F	IC	1	
IC474	AN79L09	IC	1	
IC475	AN78L09	IC	1	
IC476	AN79L05	IC	1	
IC477	M74F157AF	IC	1	
IC478	MC74HC00AF	IC	1	
IC479	UPD65025B030	IC	1	
IC480	AN78L05	IC	1	
IC481	RC082BM	IC	1	
L1-L8	VLP0017	COIL	8	
L201	VLQEL05S101J	COIL 100UH	1	
L202	VLQEL05S221J	COIL 220UH	1	
L203	VLQEL05S390J	COIL 39UH	1	
L204	VLQEL05S221J	COIL 220UH	1	
L205	VLQEL05S470J	COIL 47UH	1	
L404	VLQ0211M1R8	COIL 1.8UH	1	
Q201	UN2212	TRANSISTOR-RESISTOR	1	
Q202	2SB709	TRANSISTOR CHIP	1	(Q,R)
Q203,04	2SK606	TRANSISTOR	2	
Q402,03	2SD601	TRANSISTOR CHIP	2	(Q,R)
Q404-06	2SB709	TRANSISTOR CHIP	3	(Q,R)
Q408	2SB709	TRANSISTOR CHIP	1	(Q,R)
		RESISTORS		
R1	ERJ6GEYJ101	M.RESISTOR CH 1/10W 100	1	
R2	ERJ6GEYG472	M.RESISTOR CH 1/10W 4.7K	1	
R3,R4	ERJ6GEYG103	M.RESISTOR CH 1/10W 10K	2	
R5	ERJ6GEYG270	M.RESISTOR CH 1/10W 27	1	
R6,R7	ERJ6GEYJ393	M.RESISTOR CH 1/10W 39K	2	
R11,12	ERJ6GEYJ272	M.RESISTOR CH 1/10W 2.7K	2	
R13	ERJ6GEYG270	M.RESISTOR CH 1/10W 27	1	
R14	ERJ6GEYG103	M.RESISTOR CH 1/10W 10K	1	
R16	ERJ6GEY0R00	M.RESISTOR CH 1/10W 0	1	
R18	ERJ6GEY0R00	M.RESISTOR CH 1/10W 0	1	
R19,20	ERJ6GEYJ272	M.RESISTOR CH 1/10W 2.7K	2	
R21	ERJ6GEY0R00	M.RESISTOR CH 1/10W 0	1	
R22	ERJ6GEYG270	M.RESISTOR CH 1/10W 27	1	
R23	ERJ6GEY0R00	M.RESISTOR CH 1/10W 0	1	
R25	ERJ6GEY0R00	M.RESISTOR CH 1/10W 0	1	
R28,29	ERJ6GEYG103	M.RESISTOR CH 1/10W 10K	2	
R30	ERJ6GEYG182	M.RESISTOR CH 1/10W 1.8K	1	
R31	ERJ6GEYG103	M.RESISTOR CH 1/10W 10K	1	
R33	ERJ6GEYJ393	M.RESISTOR CH 1/10W 39K	1	
R34,35	ERJ6GEYJ101	M.RESISTOR CH 1/10W 100	2	
R36-40	ERJ6GEYJ393	M.RESISTOR CH 1/10W 39K	5	
R42,43	ERJ6GEYJ105	M.RESISTOR CH 1/10W 1M	2	
R44,45	ERJ6GEY0R00	M.RESISTOR CH 1/10W 0	2	
R47-50	ERJ6GEYJ393	M.RESISTOR CH 1/10W 39K	4	
R51,52	ERJ6GEYG472	M.RESISTOR CH 1/10W 4.7K	2	
R53	ERJ6GEYG223	M.RESISTOR CH 1/10W 22K	1	
R55	ERJ6GEYG682	M.REISITOR CH 1/10W 6.8K	1	
R57	ERJ6GEYG682	M.REISITOR CH 1/10W 6.8K	1	
R58	ERJ6GEY0R00	M.RESISTOR CH 1/10W 0	1	
R60	ERJ6GEYG152	M.RESISTOR CH 1/10W 1.5K	1	
R61	ERJ6GEYG102	M.RESISTOR CH 1/10W 1K	1	
R62	ERJ6GEYG182	M.RESISTOR CH 1/10W 1.8K	1	
R63	ERJ6GEYG472	M.RESISTOR CH 1/10W 4.7K	1	
R64	ERJ6GEYG152	M.RESISTOR CH 1/10W 1.5K	1	
R65	ERJ6GEYG472	M.RESISTOR CH 1/10W 4.7K	1	
R66	ERJ6GEYG102	M.RESISTOR CH 1/10W 1K	1	
R67	ERJ6GEYG152	M.RESISTOR CH 1/10W 1.5K	1	
R68	ERJ6GEYG472	M.RESISTOR CH 1/10W 4.7K	1	

Ref.No.	Part No.	Part Name & Description	Pcs	Remarks
R69	ERJ6GEYG102	M.RESISTOR CH 1/10W 1K	1	
R70	ERJ6GEYJ393	M.RESISTOR CH 1/10W 39K	1	
R201	ERJ6GEYJ224	M.RESISTOR CH 1/10W 220K	1	
R202	ERJ6GEYJ684	M.RESISTOR CH 1/10W 680K	1	
R203	ERJ6GEYJ103	M.RESISTOR CH 1/10W 10K	1	
R204,05	ERJ6GEYJ822	M.RESISTOR CH 1/10W 8.2K	2	
R206-10	ERJ6GEYJ222	M.RESISTOR CH 1/10W 2.2K	5	
R211	ERJ6GEYJ683	M.RESISTOR CH 1/10W 68K	1	
R212	ERJ6GEYJ222	M.RESISTOR CH 1/10W 2.2K	1	
R213,14	ERJ6GEYJ103	M.RESISTOR CH 1/10W 10K	2	
R215	ERJ6GEYJ333	M.RESISTOR CH 1/10W 33K	1	
R216	ERJ6GEYJ682	M.RESISTOR CH 1/10W 6.8K	1	
R217	ERJ6GEYJ103	M.RESISTOR CH 1/10W 10K	1	
R218	ERJ6GEYJ563	M.RESISTOR CH 1/10W 56K	1	
R219	ERJ6GEYJ681	M.RESISTOR CH 1/10W 680	1	
R220	ERJ6GEYJ184	M.RESISTOR CH 1/10W 180K	1	
R221	ERJ6GEYJ392	M.RESISTOR CH 1/10W 3.9K	1	
R222,23	ERJ6GEYJ102	M.RESISTOR CH 1/10W 1K	2	
R224	ERJ6GEYJ222	M.RESISTOR CH 1/10W 2.2K	1	
R225	ERJ6GEYJ102	M.RESISTOR CH 1/10W 1K	1	
R226	ERJ6GEYJ333	M.RESISTOR CH 1/10W 33K	1	
R227	ERJ6GEYJ273	M.RESISTOR CH 1/10W 27K	1	
R228	ERJ6GEYJ223	M.RESISTOR CH 1/10W 22K	1	
R229	ERJ6GEYJ105	M.RESISTOR CH 1/10W 1M	1	
R230	ERJ6GEYJ102	M.RESISTOR CH 1/10W 1K	1	
R231	ERJ6GEYJ473	M.RESISTOR CH 1/10W 47K	1	
R232	ERJ6GEYJ123	M.RESISTOR CH 1/10W 12K	1	
R233	ERJ6GEYJ103	M.RESISTOR CH 1/10W 10K	1	
R234,35	ERJ6GEYJ473	M.RESISTOR CH 1/10W 47K	2	
R236,37	ERJ6GEYJ332	M.RESISTOR CH 1/10W 3.3K	2	
R238	ERJ6GEYJ102	M.RESISTOR CH 1/10W 1K	1	
R239	ERDS2TJ123	C.RESISTOR 1/4W 12K	1	
R240	ERJ6GEYJ103	M.RESISTOR CH 1/10W 10K	1	
R241	ERJ6GEYJ221	M.RESISTOR CH 1/10W 220	1	
R247	ERJ6GEYJ332	M.RESISTOR CH 1/10W 3.3K	1	
R248	ERJ6GEYJ123	M.RESISTOR CH 1/10W 12K	1	
R249	ERJ6GEYJ821	M.RESISTOR CH 1/10W 820	1	
R251-60	ERJ6GEYJ393	M.RESISTOR CH 1/10W 39K	10	
R261	ERJ6GEYJ473	M.RESISTOR CH 1/10W 47K	1	
R262-64	ERJ6GEYJ223	M.RESISTOR CH 1/10W 22K	3	
R265	ERJ6GEYJ104	M.RESISTOR CH 1/10W 100K	1	
R266	ERJ6GEYJ122	M.RESISTOR CH 1/10W 1.2K	1	
R267	ERJ6GEYJ473	M.RESISTOR CH 1/10W 47K	1	
R268	ERJ6GEYJ153	M.RESISTOR CH 1/10W 15K	1	
R269	ERJ6GEYJ103	M.RESISTOR CH 1/10W 10K	1	
R270	ERJ6GEYJ223	M.RESISTOR CH 1/10W 22K	1	
R272	ERJ6GEYJ473	M.RESISTOR CH 1/10W 47K	1	
R273	ERJ6GEYJ105	M.RESISTOR CH 1/10W 1M	1	
R274	ERJ6GEYJ104	M.RESISTOR CH 1/10W 100K	1	
R275	ERJ6GEYJ682	M.RESISTOR CH 1/10W 6.8K	1	
R276	ERJ6GEYJ223	M.RESISTOR CH 1/10W 22K	1	
R277	ERJ6GEYJ153	M.RESISTOR CH 1/10W 15K	1	
R278	ERJ6GEYJ273	M.RESISTOR CH 1/10W 27K	1	
R279	ERJ6GEYJ332	M.RESISTOR CH 1/10W 3.3K	1	
R280	ERJ6GEYJ682	M.RESISTOR CH 1/10W 6.8K	1	
R281	ERJ6GEY0R00	M.RESISTOR CH 1/10W 0	1	
R282	ERJ6GEYJ471	M.RESISTOR CH 1/10W 470	1	
R283	ERJ6GEYJ103	M.RESISTOR CH 1/10W 10K	1	
R283	ERJ6GEYJ473	M.RESISTOR CH 1/10W 47K	1	
R284	ERJ6GEYJ822	M.RESISTOR CH 1/10W 8.2K	1	
R285	ERJ6GEYJ103	M.RESISTOR CH 1/10W 10K	1	
R288	ERJ6GEYJ105	M.RESISTOR CH 1/10W 1M	1	
R289	ERJ6GEYJ223	M.RESISTOR CH 1/10W 22K	1	
R290	ERJ6GEYJ102	M.RESISTOR CH 1/10W 1K	1	
R291	ERJ6GEYJ471	M.RESISTOR CH 1/10W 470	1	
R292	ERJ6GEYJ473	M.RESISTOR CH 1/10W 47K	1	
R293	ERJ6GEYJ822	M.RESISTOR CH 1/10W 8.2K	1	
R294	ERJ6GEYJ103	M.RESISTOR CH 1/10W 10K	1	
R295	ERJ6GEYJ105	M.RESISTOR CH 1/10W 1M	1	
R296	ERJ6GEYJ223	M.RESISTOR CH 1/10W 22K	1	
R297	ERJ6GEYJ102	M.RESISTOR CH 1/10W 1K	1	
R298-00	ERJ6GEYJ223	M.RESISTOR CH 1/10W 22K	3	
R301	ERJ6GEYJ101	M.RESISTOR CH 1/10W 100	1	
R351	ERJ6GEY0R00	M.RESISTOR CH 1/10W 0	1	
R353	ERJ6GEY0R00	M.RESISTOR CH 1/10W 0	1	

Refer to the P.C.BOARDS LIST, page 6-1-1, before using this page.

Ref.No.	Part No.	Part Name & Description	Pcs	Remarks
R355-58	ERJ6GEYOR00	M.RESISTOR CH 1/10W 0	4	
R361	ERJ6GEYOR00	M.RESISTOR CH 1/10W 0	1	
R366-68	ERJ6GEYOR00	M.RESISTOR CH 1/10W 0	3	
R375	ERJ6GEYOR00	M.RESISTOR CH 1/10W 0	1	
R380	ERJ6GEYOR00	M.RESISTOR CH 1/10W 0	1	
R401	ERJ6GEYJ103	M.RESISTOR CH 1/10W 10K	1	
R402	ERJ6GEYJ102	M.RESISTOR CH 1/10W 1K	1	
R403	ERJ6GEYJ393	M.RESISTOR CH 1/10W 39K	1	
R404	ERJ6GEYJ472	M.RESISTOR CH 1/10W 4.7K	1	
R405	ERJ6GEYJ562	M.RESISTOR CH 1/10W 5.6K	1	
R406	ERJ6GEYJ103	M.RESISTOR CH 1/10W 10K	1	
R408	ERJ6GEYJ183	M.RESISTOR CH 1/10W 18K	1	
R409	ERJ6GEYJ681	M.RESISTOR CH 1/10W 680	1	
R410	ERJ6GEYJ682	M.RESISTOR CH 1/10W 6.8K	1	
R411-17	ERJ6GEYJ393	M.RESISTOR CH 1/10W 39K	7	
R418,19	ERJ6GEYJ101	M.RESISTOR CH 1/10W 100	2	
R420	ERJ6GEYJ103	M.RESISTOR CH 1/10W 10K	1	
R421,22	ERJ6GEYJ392	M.RESISTOR CH 1/10W 3.9K	2	
R423	ERJ6GEYJ562	M.RESISTOR CH 1/10W 5.6K	1	
R424	ERJ6GEYJ272	M.RESISTOR CH 1/10W 2.7K	1	
R425	ERJ6GEYJ562	M.RESISTOR CH 1/10W 5.6K	1	
R426	ERJ6GEYJ392	M.RESISTOR CH 1/10W 3.9K	1	
R427	ERJ6GEYJ272	M.RESISTOR CH 1/10W 2.7K	1	
R428	ERJ6GEYJ563	M.RESISTOR CH 1/10W 56K	1	
R429	ERJ6GEYJ562	M.RESISTOR CH 1/10W 5.6K	1	
R430	ERJ6GEYJ103	M.RESISTOR CH 1/10W 10K	1	
R431	ERJ6GEYJ183	M.RESISTOR CH 1/10W 18K	1	
R432	ERJ6GEYJ681	M.RESISTOR CH 1/10W 680	1	
R433	ERJ6GEYJ393	M.RESISTOR CH 1/10W 39K	1	
R434	ERJ6GEYJ471	M.RESISTOR CH 1/10W 470	1	
R435	ERJ6GEYJ273	M.RESISTOR CH 1/10W 27K	1	
R436	ERJ6GEYJ823	M.RESISTOR CH 1/10W 82K	1	
R438-41	ERJ6GEYOR00	M.RESISTOR CH 1/10W 0	4	
R444	ERJ6GEYOR00	M.RESISTOR CH 1/10W 0	1	
R445	ERJ6GEYJ152	M.RESISTOR CH 1/10W 1.5K	1	
R446	ERJ6GEYJ392	M.RESISTOR CH 1/10W 3.9K	1	
R447	ERJ6GEYJ562	M.RESISTOR CH 1/10W 5.6K	1	
R448	ERJ6GEYOR00	M.RESISTOR CH 1/10W 0	1	
R450	ERJ6GEYJ393	M.RESISTOR CH 1/10W 39K	1	
R451	ERJ6GEYJ471	M.RESISTOR CH 1/10W 470	1	
R452	ERJ6GEYJ682	M.RESISTOR CH 1/10W 6.8K	1	
R453	ERJ6GEYJ183	M.RESISTOR CH 1/10W 18K	1	
R454,55	ERJ6GEYOR00	M.RESISTOR CH 1/10W 0	2	
R456	ERJ6GEYJ563	M.RESISTOR CH 1/10W 56K	1	
R457	ERJ6GEYJ472	M.RESISTOR CH 1/10W 4.7K	1	
R458	ERJ6GEYJ683	M.RESISTOR CH 1/10W 68K	1	
R459	ERJ6GEYJ103	M.RESISTOR CH 1/10W 10K	1	
R461	ERJ6GEYJ273	M.RESISTOR CH 1/10W 27K	1	
R462	ERJ6GEYJ101	M.RESISTOR CH 1/10W 100	1	
R464	ERJ6GEYJ562	M.RESISTOR CH 1/10W 5.6K	1	
R465	ERJ6GEYJ183	M.RESISTOR CH 1/10W 18K	1	
R466,67	ERJ6GEYJ182	M.RESISTOR CH 1/10W 1.8K	2	
R468	ERJ6GEYJ153	M.RESISTOR CH 1/10W 15K	1	
R469	ERJ6GEYJ681	M.RESISTOR CH 1/10W 680	1	
R470	ERJ6GEYJ123	M.RESISTOR CH 1/10W 12K	1	
R471	ERJ6GEYJ821	M.RESISTOR CH 1/10W 820	1	
R472	ERJ6GEYJ153	M.RESISTOR CH 1/10W 15K	1	
R473	ERJ6GEYJ182	M.RESISTOR CH 1/10W 1.8K	1	
R474	ERJ6GEYJ153	M.RESISTOR CH 1/10W 15K	1	
R475,76	ERJ6GEYJ332	M.RESISTOR CH 1/10W 3.3K	2	
R477	ERJ6GEYJ222	M.RESISTOR CH 1/10W 2.2K	1	
R478	ERJ6GEYJ562	M.RESISTOR CH 1/10W 5.6K	1	
R480	ERJ6GEYJ273	M.RESISTOR CH 1/10W 27K	1	
R481	ERJ6GEYJ153	M.RESISTOR CH 1/10W 15K	1	
R482	ERJ6GEYJ682	M.RESISTOR CH 1/10W 6.8K	1	
R483	ERJ6GEYJ152	M.RESISTOR CH 1/10W 1.5K	1	
R484,85	ERJ6GEYJ102	M.RESISTOR CH 1/10W 1K	2	
R486,87	ERJ6GEYJ103	M.RESISTOR CH 1/10W 10K	2	
R488	ERJ6GEYJ123	M.RESISTOR CH 1/10W 12K	1	
R489	ERJ6GEYJ183	M.RESISTOR CH 1/10W 18K	1	
R491	ERJ6GEYOR00	M.RESISTOR CH 1/10W 0	1	
R493	ERJ6GEYOR00	M.RESISTOR CH 1/10W 0	1	
R495,96	ERJ6GEYOR00	M.RESISTOR CH 1/10W 0	2	
R498	ERJ6GEYJ562	M.RESISTOR CH 1/10W 5.6K	1	
R499	ERJ6GEYJ472	M.RESISTOR CH 1/10W 4.7K	1	

Ref.No.	Part No.	Part Name & Description	Pcs	Remarks
R502	ERJ6GEYJ152	M.RESISTOR CH 1/10W 1.5K	1	
R503,04	ERJ6GEYJ102	M.RESISTOR CH 1/10W 1K	2	
R524	ERJ6GEYJ152	M.RESISTOR CH 1/10W 1.5K	1	
R525	ERJ6GEYJ101	M.RESISTOR CH 1/10W 100	1	
R529	ERJ6GEYOR00	M.RESISTOR CH 1/10W 0	1	
R530	ERJ6GEYJ102	M.RESISTOR CH 1/10W 1K	1	
R531	ERJ6GEYJ101	M.RESISTOR CH 1/10W 100	1	
R532	ERJ6GEYOR00	M.RESISTOR CH 1/10W 0	1	
R569	ERJ6GEYJ562	M.RESISTOR CH 1/10W 5.6K	1	
RA1,A2	EXBF9E332J	COMBI.R-R 33K	2	
RA4-A9	EXBF9E332J	COMBI.R-R 33K	6	
RA10-18	EXBF9E332J	COMBI.R-R 33K	9	
SW7,W8	VSS0126	SWITCH	2	
SW201	VSS0126	SWITCH	1	
SW203	VSR0045	SWITCH	1	
TP1,P2	VJR0646	TEST POINT	2	
TP201-08	VJR0646	TEST POINT	8	
TP210-15	VJR0646	TEST POINT	6	
TP412,13	VJR0646	TEST POINT	2	
TP416,17	VJR0646	TEST POINT	2	
TP422-27	VJR0646	TEST POINT	6	
TPG201	VJR0646	TEST POINT	1	
TPG401,02	VJR0646	TEST POINT	2	
VR1	VRV0109B103	V.RESISTOR 10K	1	
VR2	VRV0109B202	V.RESISTOR 2K	1	
VR201	VRV0109B203	V.RESISTOR 20K	1	
VR202	VRV0109B103	V.RESISTOR 10K	1	
VR204	VRV0064B502	V.RESISTOR 5K	1	
VR205	VRV0109B502	V.RESISTOR 5K	1	
VR206,07	VRV0064B502	V.RESISTOR 5K	2	
VR401,02	VRV0109B502	V.RESISTOR 5K	2	
VR403	VRV0109B202	V.RESISTOR 2K	1	
VR405,06	VRV0064B502	V.RESISTOR 5K	2	
VR408	VRV0109B202	V.RESISTOR 2K	1	
VR409	VRV0109B502	V.RESISTOR 5K	1	
X201	VSX0114	CRYSTAL OSCILLATOR	1	
X202	VSX0270	CRYSTAL OSCILLATOR	1	
X203,04	VSX0280	CRYSTAL OSCILLATOR	2	
X501	VSX0211	CRYSTAL OSCILLATOR	1	
		MISCELLANEOUS		
	VML2143	CARD PULLER	1	
	VML2144	CARD PULLER	1	
	VMS4174	PIN	6	
	VMZ1091	BARRIER	1	
	VMZ1547	BARRIER	1	
	VSC3056	SHIELD CASE	1	
	VXA3966	P.C.B. SHIELD PLATE	1	
	XNG26E	NUT	4	
	XYNV3+K6FR	SCREW	6	
	XYN26+C12	SCREW	4	

Refer to the P.C.BOARDS LIST, page 6-1-1, before using this page.

Ref.No.		Part No.	Part Name & Description	Pcs	Remarks
	■	VEP88063A	P.C.BOARD W/COMPONENT		
			W2 ENCODER		
			CAPACITORS		
C1		ECUM1H103KBN	C.CAPACITOR CH 50V 0.01U	1	
C2		ECEA1CU221	E.CAPACITOR 16V 220U	1	
C3		ECUM1H103KBN	C.CAPACITOR CH 50V 0.01U	1	
C4		ECEAOJU101	E.CAPACITOR 6.3V 100U	1	
C5		ECUM1H103KBN	C.CAPACITOR CH 50V 0.01U	1	
C6		ECEA1CU221	E.CAPACITOR 16V 220U	1	
C7-C9		ECUM1H103KBN	C.CAPACITOR CH 50V 0.01U	3	
C10		ECUM1H103KBN	C.CAPACITOR CH 50V 0.01U	1	
C11		ECEA1AU101	E.CAPACITOR 10V 100U	1	
C12,13		ECUM1H103KBN	C.CAPACITOR CH 50V 0.01U	2	
C14		ECEA1AU101	E.CAPACITOR 10V 100U	1	
C15		ECUM1H470JCN	C.CAPACITOR CH 50V 47P	1	
C16		ECUM1H103KBN	C.CAPACITOR CH 50V 0.01U	1	
C17		ECUM1H330JCN	C.CAPACITOR CH 50V 33P	1	
C18		ECUM1H103KBN	C.CAPACITOR CH 50V 0.01U	1	
C19,20		ECEA1CU221	E.CAPACITOR 16V 220U	2	
C21,22		ECUM1H103KBN	C.CAPACITOR CH 50V 0.01U	2	
C23		ECUM1H470JCN	C.CAPACITOR CH 50V 47P	1	
C24,25		ECUM1H151JCN	C.CAPACITOR CH 50V 150P	2	
C26		ECUM1E104ZFN	C.CAPACITOR CH 25V 0.1U	1	
C27		ECUM1H270JCN	C.CAPACITOR CH 50V 27P	1	
C28		ECQM1H183JF	P.CAPACITOR 50V 0.018U	1	
C29		ECUM1H103KBN	C.CAPACITOR CH 50V 0.01U	1	
C30		ECEA1EN4R7S	E.CAPACITOR 25V 4.7U	1	
C31		ECEA1HN2R2S	E.CAPACITOR 50V 2.2U	1	
C32		ECUM1H103KBN	C.CAPACITOR CH 50V 0.01U	1	
C33		ECEAOJU101	E.CAPACITOR 6.3V 100U	1	
C35		ECEAOJU221	E.CAPACITOR 6.3V 220U	1	
C36		ECUM1H103KBN	C.CAPACITOR CH 50V 0.01U	1	
C37		ECEAOJU221	E.CAPACITOR 6.3V 220U	1	
C38-46		ECUM1H103KBN	C.CAPACITOR CH 50V 0.01U	9	
C49,50		ECUM1H103KBN	C.CAPACITOR CH 50V 0.01U	2	
C51		ECEA1AU101	E.CAPACITOR 10V 100U	1	
C52		ECUM1E104ZFN	C.CAPACITOR CH 25V 0.1U	1	
C53		ECUM1H103KBN	C.CAPACITOR CH 50V 0.01U	1	
C54		ECEA1AU101	E.CAPACITOR 10V 100U	1	
C56		ECUM1H103KBN	C.CAPACITOR CH 50V 0.01U	1	
C57		ECUM1H150JCN	C.CAPACITOR CH 50V 15P	1	
C58		ECUM1H103KBN	C.CAPACITOR CH 50V 0.01U	1	
C59		ECEAOJU101	E.CAPACITOR 6.3V 100U	1	
C60		ECUM1H120JCN	C.CAPACITOR CH 50V 12P	1	
C61		ECEAOJU221	E.CAPACITOR 6.3V 220U	1	
C62		ECUM1H103KBN	C.CAPACITOR CH 50V 0.01U	1	
C63		ECEAOJU221	E.CAPACITOR 6.3V 220U	1	
C64-73		ECUM1H103KBN	C.CAPACITOR CH 50V 0.01U	10	
C76		ECUM1H270JCN	C.CAPACITOR CH 50V 27P	1	
C77		ECUM1E104ZFN	C.CAPACITOR CH 25V 0.1U	1	
C78		ECQM1H223JF	P.CAPACITOR 50V 0.022U	1	
C79		ECUM1H103KBN	C.CAPACITOR CH 50V 0.01U	1	
C80		ECEA1HN100S	E.CAPACITOR 50V 10U	1	
C81		ECEA1HNZR2S	E.CAPACITOR 50V 2.2U	1	
C82,83		ECUM1E104ZFN	C.CAPACITOR CH 25V 0.1U	2	
C84		ECEAOJU470	E.CAPACITOR 6.3V 47U	1	
C85,86		ECUM1E104ZFN	C.CAPACITOR CH 25V 0.1U	2	
C87		ECUM1H103KBN	C.CAPACITOR CH 50V 0.01U	1	
C88		ECUM1E104ZFN	C.CAPACITOR CH 25V 0.1U	1	
C113		ECUM1E104ZFN	C.CAPACITOR CH 25V 0.1U	1	
C114-17		ECUM1H103KBN	C.CAPACITOR CH 50V 0.01U	4	
C120		ECUM1H103KBN	C.CAPACITOR CH 50V 0.01U	1	
C121		ECEA1AU470	E.CAPACITOR 10V 47U	1	
C122		ECUM1H103KBN	C.CAPACITOR CH 50V 0.01U	1	
C123		ECUM1C104KBN	C.CAPACITOR CH 16V 0.1U	1	
C124		ECUM1H181JCN	C.CAPACITOR CH 50V 180P	1	
C125		ECUM1E104ZFN	C.CAPACITOR CH 25V 0.1U	1	

Ref.No.		Part No.	Part Name & Description	Pcs	Remarks
C126		ECUM1C104KBN	C.CAPACITOR CH 16V 0.1U	1	
C127		ECUM1H180JCN	C.CAPACITOR CH 50V 18P	1	
C128		ECUM1H680JCN	C.CAPACITOR CH 50V 68P	1	
C129,30		ECUM1C104KBN	C.CAPACITOR CH 16V 0.1U	2	
C131		ECEA1HN010S	E.CAPACITOR 50V 1U	1	
C132		ECUM1H103KBN	C.CAPACITOR CH 50V 0.01U	1	
C133		ECEA1AU470	E.CAPACITOR 10V 47U	1	
C134		ECUM1H820JCN	C.CAPACITOR CH 50V 82P	1	
C135		ECUM1H122JN	C.CAPACITOR CH 50V 1200P	1	
C137		ECUM1H470JCN	C.CAPACITOR CH 50V 47P	1	
C138		ECUM1H821JCN	C.CAPACITOR CH 50V 820P	1	
C139-41		ECUM1H103KBN	C.CAPACITOR CH 50V 0.01U	3	
C142		ECEA1AU470	E.CAPACITOR 10V 47U	1	
C143,44		ECUM1C104KBN	C.CAPACITOR CH 16V 0.1U	2	
C145		ECUM1H121JCN	C.CAPACITOR CH 50V 120P	1	
C146		ECUM1E104ZFN	C.CAPACITOR CH 25V 0.1U	1	
C147-49		ECUM1C104KBN	C.CAPACITOR CH 16V 0.1U	3	
C150		ECEA1HN010S	E.CAPACITOR 50V 1U	1	
C151		ECUM1H103KBN	C.CAPACITOR CH 50V 0.01U	1	
C152		ECEA1AU470	E.CAPACITOR 10V 47U	1	
C154		ECUM1H820JCN	C.CAPACITOR CH 50V 82P	1	
C155		ECUM1H122JN	C.CAPACITOR CH 50V 1200P	1	
C157		ECUM1H470JCN	C.CAPACITOR CH 50V 47P	1	
C158-60		ECUM1H821JCN	C.CAPACITOR CH 50V 820P	3	
C161,62		ECEA1AN470S	E.CAPACITOR 10V 47U	2	
C163		ECEA1CU470	E.CAPACITOR 16V 47U	1	
C164		ECQM1H104JF	P.CAPACITOR 50V 0.1U	1	
C165		ECEA1AN470S	E.CAPACITOR 10V 47U	1	
C200		ECUM1H103KBN	C.CAPACITOR CH 50V 0.01U	1	
C201		ECEA1AU101	E.CAPACITOR 10V 100U	1	
C202,03		ECUM1H103KBN	C.CAPACITOR CH 50V 0.01U	2	
C204		ECEA1AU101	E.CAPACITOR 10V 100U	1	
C205		ECUM1H103KBN	C.CAPACITOR CH 50V 0.01U	1	
C206		ECUM1H150JCN	C.CAPACITOR CH 50V 15P	1	
C207		ECUM1H470JCN	C.CAPACITOR CH 50V 47P	1	
C209		ECUM1H220JCN	C.CAPACITOR CH 50V 22P	1	
C210		ECUM1H100DCN	C.CAPACITOR CH 50V 10P	1	
C211		ECUM1C104KBN	C.CAPACITOR CH 16V 0.1U	1	
C212		ECUM1E104ZFN	C.CAPACITOR CH 25V 0.1U	1	
C213		ECUM1H221JCN	C.CAPACITOR CH 50V 220P	1	
C214		ECUM1H270JCN	C.CAPACITOR CH 50V 27P	1	
C215		ECUM1H103KBN	C.CAPACITOR CH 50V 0.01U	1	
C219		ECUM1H560JCN	C.CAPACITOR CH 50V 56P	1	
C220		ECUM1E104ZFN	C.CAPACITOR CH 25V 0.1U	1	
C223		ECUM1H221JCN	C.CAPACITOR CH 50V 220P	1	
C224		ECUM1H030DCN	C.CAPACITOR CH 50V 3P	1	
C226		ECEA1HNR47S	E.CAPACITOR 50V 0.47U	1	
C227,28		ECUM1H103KBN	C.CAPACITOR CH 50V 0.01U	2	
C229		ECEA1AU101	E.CAPACITOR 10V 100U	1	
C230,31		ECUM1H103KBN	C.CAPACITOR CH 50V 0.01U	2	
C232		ECEA1AU101	E.CAPACITOR 10V 100U	1	
C233		ECUM1H103KBN	C.CAPACITOR CH 50V 0.01U	1	
C235		ECUM1H120JCN	C.CAPACITOR CH 50V 12P	1	
C236		ECUM1H560JCN	C.CAPACITOR CH 50V 56P	1	
C238		ECUM1H100DCN	C.CAPACITOR CH 50V 10P	1	
C239		ECUM1H680JCN	C.CAPACITOR CH 50V 68P	1	
C240		ECUM1H121JCN	C.CAPACITOR CH 50V 120P	1	
C241		ECUM1H100DCN	C.CAPACITOR CH 50V 10P	1	
C242		ECEA1HNR47S	E.CAPACITOR 50V 0.47U	1	
C243		ECUM1C104KBN	C.CAPACITOR CH 16V 0.1U	1	
C245		ECUM1H103KBN	C.CAPACITOR CH 50V 0.01U	1	
C247		ECUM1H103KBN	C.CAPACITOR CH 50V 0.01U	1	
C248		ECEAOJU470	E.CAPACITOR 6.3V 47U	1	
C249		ECUM1H103KBN	C.CAPACITOR CH 50V 0.01U	1	
C257,58		ECUM1E104ZFN	C.CAPACITOR CH 25V 0.1U	2	
C260		ECUM1H221JCN	C.CAPACITOR CH 50V 220P	1	
C261		ECUM1H030DCN	C.CAPACITOR CH 50V 3P	1	
C263		ECUM1H103KBN	C.CAPACITOR CH 50V 0.01U	1	
C264		ECEA1HNR47S	E.CAPACITOR 50V 0.47U	1	
C266,67		ECUM1E104ZFN	C.CAPACITOR CH 25V 0.1U	2	
C268		ECUM1H103KBN	C.CAPACITOR CH 50V 0.01U	1	
C269		ECEA1AU101	E.CAPACITOR 10V 100U	1	
C270,71		ECUM1H103KBN	C.CAPACITOR CH 50V 0.01U	2	
C272		ECEA1AU101	E.CAPACITOR 10V 100U	1	
C273		ECUM1H103KBN	C.CAPACITOR CH 50V 0.01U	1	

Refer to the P.C.BOARDS LIST, page 6-1-1, before using this page.

Ref.No.		Part No.	Part Name & Description	Pcs	Remarks
C275		ECUM1H120JCN	C.CAPACITOR CH 50V 12P	1	
C276		ECUM1H560JCN	C.CAPACITOR CH 50V 56P	1	
C278		ECUM1H100DCN	C.CAPACITOR CH 50V 10P	1	
C279		ECUM1H680JCN	C.CAPACITOR CH 50V 68P	1	
C280		ECUM1H121JCN	C.CAPACITOR CH 50V 120P	1	
C281		ECUM1H100DCN	C.CAPACITOR CH 50V 10P	1	
C282		ECUM1C104KBN	C.CAPACITOR CH 16V 0.1U	1	
C284		ECUM1H103KBN	C.CAPACITOR CH 50V 0.01U	1	
C291		ECUM1H103KBN	C.CAPACITOR CH 50V 0.01U	1	
C292		ECEA1CU221	E.CAPACITOR 16V 220U	1	
C293		ECUM1H103KBN	C.CAPACITOR CH 50V 0.01U	1	
C294		ECEA0JU101	E.CAPACITOR 6.3V 100U	1	
C297,98		ECUM1E104ZFN	C.CAPACITOR CH 25V 0.1U	2	
C299		ECUM1H103KBN	C.CAPACITOR CH 50V 0.01U	1	
C300		ECEA1AU101	E.CAPACITOR 10V 100U	1	
C301		ECUM1H103KBN	C.CAPACITOR CH 50V 0.01U	1	
C302		ECUM1H120JCN	C.CAPACITOR CH 50V 12P	1	
C303		ECUM1H121JCN	C.CAPACITOR CH 50V 120P	1	
C304		ECUM1H180JCN	C.CAPACITOR CH 50V 18P	1	
C305,06		ECEA1HNR47S	E.CAPACITOR 50V 0.47U	2	
C307,08		ECQM1H104JF	P.CAPACITOR 50V 0.1U	2	
C311		ECUM1H560JCN	C.CAPACITOR CH 50V 56P	1	
C312,13		ECUM1H120JCN	C.CAPACITOR CH 50V 12P	2	
C314		ECUM1H560JCN	C.CAPACITOR CH 50V 56P	1	
C501,02		ECEA1CU101	E.CAPACITOR 16V 100U	2	
C503		ECUM1H330JCN	C.CAPACITOR CH 50V 33P	1	
C504		ECUM1C104KBN	C.CAPACITOR CH 16V 0.1U	1	
C505		ECUM1H103KBN	C.CAPACITOR CH 50V 0.01U	1	
C506		ECEA1HNR47S	E.CAPACITOR 50V 0.47U	1	
C507,08		ECUM1H103KBN	C.CAPACITOR CH 50V 0.01U	2	
C510		ECUM1H103KBN	C.CAPACITOR CH 50V 0.01U	1	
C517		ECUM1H103KBN	C.CAPACITOR CH 50V 0.01U	1	
C518		ECUM1H330JCN	C.CAPACITOR CH 50V 33P	1	
C520		ECUM1H103KBN	C.CAPACITOR CH 50V 0.01U	1	
C521		ECEA0JU470	E.CAPACITOR 6.3V 47U	1	
C522		ECUM1H220JCN	C.CAPACITOR CH 50V 22P	1	
C523		ECUM1H181JCN	C.CAPACITOR CH 50V 180P	1	
C524		ECUM1H103KBN	C.CAPACITOR CH 50V 0.01U	1	
C525		ECEA0JU101	E.CAPACITOR 6.3V 100U	1	
C526		ECUM1H103KBN	C.CAPACITOR CH 50V 0.01U	1	
C527,28		ECEA1CU101	E.CAPACITOR 16V 100U	2	
C531		ECEA1CU101	E.CAPACITOR 16V 100U	1	
C532		ECUM1H103KBN	C.CAPACITOR CH 50V 0.01U	1	
C533		ECEA1CU101	E.CAPACITOR 16V 100U	1	
C534,35		ECUM1H103KBN	C.CAPACITOR CH 50V 0.01U	2	
C536,37		ECUM1H560JCN	C.CAPACITOR CH 50V 56P	2	
C538,39		ECUM1H103KBN	C.CAPACITOR CH 50V 0.01U	2	
C540		ECUM1E104ZFN	C.CAPACITOR CH 25V 0.1U	1	
C541		ECUM1H330JCN	C.CAPACITOR CH 50V 33P	1	
C542		ECUM1H271JCN	C.CAPACITOR CH 50V 270P	1	
C543		ECUM1H680JCN	C.CAPACITOR CH 50V 68P	1	
C544		ECUM1H070DCN	C.CAPACITOR CH 50V 7P	1	
C545		ECUM1H220JCN	C.CAPACITOR CH 50V 22P	1	
C546		ECUM1H121JCN	C.CAPACITOR CH 50V 120P	1	
C547		ECUM1H100DCN	C.CAPACITOR CH 50V 10P	1	
C550		ECUM1H103KBN	C.CAPACITOR CH 50V 0.01U	1	
C551		ECUM1H471JCN	C.CAPACITOR CH 50V 470P	1	
C552		ECUM1H270JCN	C.CAPACITOR CH 50V 27P	1	
C553		ECUM1H103KBN	C.CAPACITOR CH 50V 0.01U	1	
C554		ECUM1E104ZFN	C.CAPACITOR CH 25V 0.1U	1	
C555		ECUM1H103KBN	C.CAPACITOR CH 50V 0.01U	1	
C559		ECEA0JU470	E.CAPACITOR 6.3V 47U	1	
C560		ECUM1H103KBN	C.CAPACITOR CH 50V 0.01U	1	
C561		ECEA0JN330S	E.CAPACITOR 6.3V 33U	1	
C562		ECUM1H680JCN	C.CAPACITOR CH 50V 68P	1	
C563		ECUM1H271JCN	C.CAPACITOR CH 50V 270P	1	
C564		ECUM1H151JCN	C.CAPACITOR CH 50V 150P	1	
C565		ECUM1H471JCN	C.CAPACITOR CH 50V 470P	1	
C566		ECEA1CU470	E.CAPACITOR 16V 47U	1	
C567-69		ECUM1H103KBN	C.CAPACITOR CH 50V 0.01U	3	
C570		ECEA1CU470	E.CAPACITOR 16V 47U	1	
C571		ECUM1H103KBN	C.CAPACITOR CH 50V 0.01U	1	
C572		ECUM1E104ZFN	C.CAPACITOR CH 25V 0.1U	1	
C573		ECUM1H103KBN	C.CAPACITOR CH 50V 0.01U	1	
C574,75		ECUM1H220JCN	C.CAPACITOR CH 50V 22P	2	

Ref.No.		Part No.	Part Name & Description	Pcs	Remarks
C576,77		ECUM1H103KBN	C.CAPACITOR CH 50V 0.01U	2	
C578		ECEA0JU101	E.CAPACITOR 6.3V 100U	1	
C579		ECUM1E104ZFN	C.CAPACITOR CH 25V 0.1U	1	
C580,81		ECUM1H220JCN	C.CAPACITOR CH 50V 22P	2	
C582		ECEA0JU101	E.CAPACITOR 6.3V 100U	1	
C583		ECUM1E104ZFN	C.CAPACITOR CH 25V 0.1U	1	
C584		ECUM1H103KBN	C.CAPACITOR CH 50V 0.01U	1	
C585		ECUM1H820JCN	C.CAPACITOR CH 50V 82P	1	
C586		ECUM1H100DCN	C.CAPACITOR CH 50V 10P	1	
C587,88		ECUM1H103KBN	C.CAPACITOR CH 50V 0.01U	2	
C589		ECUM1H271JCN	C.CAPACITOR CH 50V 270P	1	
C590		ECUM1H221JCN	C.CAPACITOR CH 50V 220P	1	
C591		ECUM1H820JCN	C.CAPACITOR CH 50V 82P	1	
C592-97		ECUM1H103KBN	C.CAPACITOR CH 50V 0.01U	6	
C598		ECEA1CU101	E.CAPACITOR 16V 100U	1	
C599,00		ECUM1H103KBN	C.CAPACITOR CH 50V 0.01U	2	
C601		ECEA1CU101	E.CAPACITOR 16V 100U	1	
C602		ECUM1H103KBN	C.CAPACITOR CH 50V 0.01U	1	
C603		ECEA1AU101	E.CAPACITOR 10V 100U	1	
C604		ECUM1H103KBN	C.CAPACITOR CH 50V 0.01U	1	
C605		ECEA1AU101	E.CAPACITOR 10V 100U	1	
C606		ECUM1H103KBN	C.CAPACITOR CH 50V 0.01U	1	
C607		ECEA0JU101	E.CAPACITOR 6.3V 100U	1	
C608		ECUM1H103KBN	C.CAPACITOR CH 50V 0.01U	1	
C609		ECEA0JU101	E.CAPACITOR 6.3V 100U	1	
C610		ECUM1H103KBN	C.CAPACITOR CH 50V 0.01U	1	
C611		ECUM1E104ZFN	C.CAPACITOR CH 25V 0.1U	1	
C612		ECUM1H103KBN	C.CAPACITOR CH 50V 0.01U	1	
C615-18		ECUM1H103KBN	C.CAPACITOR CH 50V 0.01U	4	
C619		ECUM1H221JCN	C.CAPACITOR CH 50V 220P	1	
C620		ECQM1H104JF	P.CAPACITOR 50V 0.1U	1	
C621		ECEA1CU100	E.CAPACITOR 16V 10U	1	
C622		ECQM1H104JF	P.CAPACITOR 50V 0.1U	1	
C623		ECEA1CU470	E.CAPACITOR 16V 47U	1	
C624		ECQM1H104JF	P.CAPACITOR 50V 0.1U	1	
C625		ECEA1CU470	E.CAPACITOR 16V 47U	1	
C626		ECQM1H104JF	P.CAPACITOR 50V 0.1U	1	
C627,28		ECUM1H122JN	C.CAPACITOR CH 50V 1200P	2	
C629		ECUM1H221JCN	C.CAPACITOR CH 50V 220P	1	
C630,31		ECUM1H122JN	C.CAPACITOR CH 50V 1200P	2	
C632		ECUM1H103KBN	C.CAPACITOR CH 50V 0.01U	1	
C634,35		ECCF1H270JC	C.CAPACITOR 50V 27P	2	
C839		ECUM1H222KBN	C.CAPACITOR CH 50V 2200P	1	
C840		ECUM1H682KBN	C.CAPACITOR CH 50V 6800P	1	
C1001		ECEA1HU010	E.CAPACITOR 50V 1U	1	
C1003,04		ECEA1CN100S	E.CAPACITOR 16V 10U	2	
C1005		ECKF1H221KB	C.CAPACITOR 50V 220P	1	
C1006		ECUM1H470JCN	C.CAPACITOR CH 50V 47P	1	
D1		1SZ51	DIODE	1	
D2		MA153	DIODE	1	
D4		MA153	DIODE	1	
D8		MA151WK	DIODE	1	
D11		MA151WK	DIODE	1	
D200,01		RD4.7EB2	ZENER 4.7V	2	
D203,04		MA151K	DIODE	2	
D210		MA151K	DIODE	1	
D501		RD3.6EB	ZENER 3.6V	1	
D508		RD4.7EB2	ZENER 4.7V	1	
D509		MA151K	DIODE	1	
D510,11		MA335R	DIODE	2	
D514		MA151K	DIODE	1	
FL1		VLF0650	FILTER	1	
FL3		VLF0754	FILTER	1	
FL200		VLF0712	FILTER	1	
FL201,02		VLF0753	FILTER	2	
IC1		AN78N09	IC	1	

Refer to the P.C.BOARDS LIST, page 6-1-1, before using this page.

Ref.No.		Part No.	Part Name & Description	Pcs	Remarks
IC2		AN79N09	IC	1	
IC3		MC74HC4053F	IC	1	
IC4-C6		TL082CPS	IC	3	
IC7		HA19211BNT	IC	1	
IC8		MC74HC574F	IC	1	(R)
IC9		TL082CPS	IC	1	
IC10-12		TL082CPS	IC	3	
IC13		HA19211BNT	IC	1	
IC14		MC74HC574F	IC	1	(R)
IC15		AN78N09	IC	1	
IC16		AN79N09	IC	1	
IC17		AN79L05	IC	1	
IC18,19		AN78N05	IC	2	
IC26,27		AN91A12S	IC	2	
IC28		MC74HC08AF	IC	1	
IC29		SN74LS123NS	IC	1	
IC30		NE521D	IC	1	
IC32		AN78N05	IC	1	
IC33		AN79N05	IC	1	
IC200		AN78N09	IC	1	
IC201		AN79N09	IC	1	
IC202		AN78N09	IC	1	
IC203		AN79N09	IC	1	
IC204		AN78N09	IC	1	
IC205		AN79N09	IC	1	
IC206		TL082CPS	IC	1	
IC207		CA3054	IC	1	
IC208-10		TL082CPS	IC	3	
IC211		AN78L05	IC	1	
IC215		TL082CPS	IC	1	
IC216		AN79L09	IC	1	
IC501		TL082CPS	IC	1	
IC502,03		CA3054	IC	2	
IC504,05		NJM1496M	IC	2	
IC506		10116D	IC	1	
IC507		MC74HC04AF	IC	1	
IC508		NJM1496M	IC	1	
IC509		MC74HC00AF	IC	1	
IC510		MC74HC74AF	IC	1	
IC511		SN74LS123NS	IC	1	
IC512		10116D	IC	1	
IC517		AN78N09	IC	1	
IC518		AN79N09	IC	1	
IC519		AN78N05	IC	1	
IC520		AN79N05	IC	1	
IC521		AN78N09	IC	1	
IC522		AN79N09	IC	1	
IC523		MC74HC04AF	IC	1	
IC822		SN74LS221NS	IC	1	
IC823		MC74HC00AF	IC	1	
L1-L3		VLP0017	COIL	3	
L5		VLQEL05S821J	COIL 820UH	1	
L6-L9		VLP0017	COIL	4	
L10		VLQEL05S221J	COIL 220UH	1	
L11		VLQEL05S56QJ	COIL 56UH	1	
L12		VLQEL05S3R9J	COIL 3.9UH	1	
L13		VLQEL05S101J	COIL 100UH	1	
L15		VLQEL05S6R8J	COIL 6.8UH	1	
L16		VLQEL05S56QJ	COIL 56UH	1	
L17		VLQEL05S3R9J	COIL 3.9UH	1	
L18		VLQEL05S101J	COIL 100UH	1	
L20		VLQEL05S6R8J	COIL 6.8UH	1	
L200		VLQEL05S6R8J	COIL 6.8UH	1	
L201		ERDS2T0	C.RESISTOR 1/4W 0	1	
L203		ERDS2T0	C.RESISTOR 1/4W 0	1	
L205,06		VLP0017	COIL	2	
L208,09		VLQEL05S6R8J	COIL 6.8UH	2	
L210		VLQEL05S47QJ	COIL 47UH	1	
L211,12		VLQEL05S6R8J	COIL 6.8UH	2	
L501,02		VLQEL05F101K	COIL 100UH	2	
L503		VLQEL05S6R8J	COIL 6.8UH	1	
L505		VLQEL05F101K	COIL 100UH	1	

Ref.No.		Part No.	Part Name & Description	Pcs	Remarks
L506		VLQEL05S680J	COIL 68UH	1	
L507,08		VLQEL05F101K	COIL 100UH	2	
L511		VLQEL05S270J	COIL 27UH	1	
L512		VLQEL05S6R8J	COIL 6.8UH	1	
L513		VLQEL05S5R6J	COIL 5.6UH	1	
L514		VLQEL05S180J	COIL 18UH	1	
L515		VLQEL05S560J	COIL 56UH	1	
L518,19		VLQEL05F101K	COIL 100UH	2	
L520,21		VLQEL05S470J	COIL 47UH	2	
L522,23		VLP0017	COIL	2	
Q1		2SD601	TRANSISTOR CHIP	1	(Q,R)
Q2		2SB709	TRANSISTOR CHIP	1	(Q,R)
Q3		2SD601	TRANSISTOR CHIP	1	(Q,R)
Q4,Q5		2SB709	TRANSISTOR CHIP	2	(Q,R)
Q6,Q7		2SC2404	TRANSISTOR CHIP	2	(C,D)
Q8		2SA1022	TRANSISTOR CHIP	1	(B,C)
Q9		2SC2295	TRANSISTOR CHIP	1	(B,C)
Q10		2SA1022	TRANSISTOR CHIP	1	(B,C)
Q11		2SK374	TRANSISTOR	1	
Q12		2SB709	TRANSISTOR CHIP	1	(Q,R)
Q13		2SD601	TRANSISTOR CHIP	1	(Q,R)
Q14		2SB709	TRANSISTOR CHIP	1	(Q,R)
Q15		2SD601	TRANSISTOR CHIP	1	(Q,R)
Q16		2SB709	TRANSISTOR CHIP	1	(Q,R)
Q17,18		2SC2404	TRANSISTOR CHIP	2	(C,D)
Q19		2SA1022	TRANSISTOR CHIP	1	(B,C)
Q20		2SC2295	TRANSISTOR CHIP	1	(B,C)
Q21		2SA1022	TRANSISTOR CHIP	1	(B,C)
Q22		2SK374	TRANSISTOR	1	
Q23		2SB709	TRANSISTOR CHIP	1	(Q,R)
Q24		2SD601	TRANSISTOR CHIP	1	(Q,R)
Q25		2SA1022	TRANSISTOR CHIP	1	(B,C)
Q26-28		2SD601	TRANSISTOR CHIP	3	(Q,R)
Q200		2SD601	TRANSISTOR CHIP	1	(Q,R)
Q201,02		2SB709	TRANSISTOR CHIP	2	(Q,R)
Q203,04		2SD601	TRANSISTOR CHIP	2	(Q,R)
Q205,06		2SC2404	TRANSISTOR CHIP	2	(C,D)
Q207		2SA1022	TRANSISTOR CHIP	1	(B,C)
Q208		2SC2295	TRANSISTOR CHIP	1	(B,C)
Q209		2SD601	TRANSISTOR CHIP	1	(Q,R)
Q210		2SK198	TRANSISTOR	1	(Q,R)
Q211-15		2SD601	TRANSISTOR CHIP	5	(Q,R)
Q219		2SD601	TRANSISTOR CHIP	1	(Q,R)
Q220,21		2SB709	TRANSISTOR CHIP	2	(Q,R)
Q222		2SD601	TRANSISTOR CHIP	1	(Q,R)
Q223,24		2SC2404	TRANSISTOR CHIP	2	(C,D)
Q225		2SA1022	TRANSISTOR CHIP	1	(B,C)
Q226		2SC2295	TRANSISTOR CHIP	1	(B,C)
Q227		2SD601	TRANSISTOR CHIP	1	(Q,R)
Q229		2SB709	TRANSISTOR CHIP	1	(Q,R)
Q230		2SD601	TRANSISTOR CHIP	1	(Q,R)
Q232,33		2SB709	TRANSISTOR CHIP	2	(Q,R)
Q234		2SD601	TRANSISTOR CHIP	1	(Q,R)
Q235,36		2SC2404	TRANSISTOR CHIP	2	(C,D)
Q237		2SK198	TRANSISTOR	1	(Q,R)
Q238,39		2SB709	TRANSISTOR CHIP	2	(Q,R)
Q240		2SD601	TRANSISTOR CHIP	1	(Q,R)
Q241,42		2SC2404	TRANSISTOR CHIP	2	(C,D)
Q243		2SA1022	TRANSISTOR CHIP	1	(B,C)
Q244		2SC2295	TRANSISTOR CHIP	1	(B,C)
Q245		2SD601	TRANSISTOR CHIP	1	(Q,R)
Q246		2SK198	TRANSISTOR	1	(Q,R)
Q247		2SB709	TRANSISTOR CHIP	1	(Q,R)
Q248,49		2SD601	TRANSISTOR CHIP	2	(Q,R)
Q250,51		2SB709	TRANSISTOR CHIP	2	(Q,R)
Q252		2SD601	TRANSISTOR CHIP	1	(Q,R)
Q253,54		2SC2404	TRANSISTOR CHIP	2	(C,D)
Q255		2SK198	TRANSISTOR	1	(Q,R)
Q256		2SC2404	TRANSISTOR CHIP	1	(C,D)
Q257		2SB709	TRANSISTOR CHIP	1	(Q,R)
Q258		2SA1022	TRANSISTOR CHIP	1	(B,C)
Q259-63		2SC2295	TRANSISTOR CHIP	5	(B,C)

Refer to the P.C.BOARDS LIST, page 6-1-1, before using this page.

Ref.No.		Part No.	Part Name & Description	Pcs	Remarks
Q265		2SC2295	TRANSISTOR CHIP	1	(B,C)
Q266,67		2SD601	TRANSISTOR CHIP	2	(Q,R)
Q284		2SK198	TRANSISTOR	1	(Q,R)
Q285		2SC2295	TRANSISTOR CHIP	1	(B,C)
Q286,87		2SD601	TRANSISTOR CHIP	2	(Q,R)
Q288,89		2SB709	TRANSISTOR CHIP	2	(Q,R)
Q290		2SD601	TRANSISTOR CHIP	1	(Q,R)
Q291,92		2SB709	TRANSISTOR CHIP	2	(Q,R)
Q501,02		2SC2295	TRANSISTOR CHIP	2	(B,C)
Q503,04		2SD601	TRANSISTOR CHIP	2	(Q,R)
Q505		2SK198	TRANSISTOR	1	(Q,R)
Q506		2SB709	TRANSISTOR CHIP	1	(Q,R)
Q507-09		2SD601	TRANSISTOR CHIP	3	(Q,R)
Q514-16		2SD601	TRANSISTOR CHIP	3	(Q,R)
Q518		2SD601	TRANSISTOR CHIP	1	(Q,R)
Q519		2SC2295	TRANSISTOR CHIP	1	(B,C)
Q520		2SD601	TRANSISTOR CHIP	1	(Q,R)
Q521,22		2SC2295	TRANSISTOR CHIP	2	(B,C)
Q523		2SD601	TRANSISTOR CHIP	1	(Q,R)
Q524,25		2SB709	TRANSISTOR CHIP	2	(Q,R)
Q526,27		2SC2295	TRANSISTOR CHIP	2	(B,C)
Q528		2SD601	TRANSISTOR CHIP	1	(Q,R)
Q532		2SB709	TRANSISTOR CHIP	1	(Q,R)
Q533-37		2SD601	TRANSISTOR CHIP	5	(Q,R)
Q538		2SB709	TRANSISTOR CHIP	1	(Q,R)
Q539		2SD601	TRANSISTOR CHIP	1	(Q,R)
Q540		2SB709	TRANSISTOR CHIP	1	(Q,R)
Q541		2SD601	TRANSISTOR CHIP	1	(Q,R)
Q542		2SB709	TRANSISTOR CHIP	1	(Q,R)
Q543		2SD601	TRANSISTOR CHIP	1	(Q,R)
Q544		2SB709	TRANSISTOR CHIP	1	(Q,R)
Q545-48		2SD601	TRANSISTOR CHIP	4	(Q,R)
Q551,52		2SD601	TRANSISTOR CHIP	2	(Q,R)
			RESISTORS		
R1		ERJ6GEYG222	M.RESISTOR CH 1/10W 2.2K	1	
R2,R3		ERJ6GEYG220	M.RESISTOR CH 1/10W 22	2	
R4,R5		ERJ6GEYG152	M.RESISTOR CH 1/10W 1.5K	2	
R6,R7		VRE0034E561	M.RESISTOR CH 1/10W 560	2	
R8		ERJ6GEYG150	M.RESISTOR CH1/10W 15	1	
R9		ERJ6GEYG473	M.RESISTOR CH1/10W 47K	1	
R10		VRE0034E301	M.RESISTOR CH 1/10W 300	1	
R11		ERJ6GEYG220	M.RESISTOR CH 1/10W 22	1	
R12		ERJ6GEYG122	M.RESISTOR CH 1/10W 1.2K	1	
R13		ERJ6GEYG121	M.RESISTOR CH 1/10W 120	1	
R14		ERJ6GEYG680	M.RESISTOR CH 1/10W 68	1	
R15		ERJ6GEYG221	M.RESISTOR CH 1/10W 220	1	
R16		ERJ6GEYG683	M.RESISTOR CH 1/10W 68K	1	
R17		ERJ6GEYG332	M.RESISTOR CH 1/10W 3.3K	1	
R18		ERJ6GEYG151	M.RESISTOR CH 1/10W 150	1	
R19		ERJ6GEYG101	M.RESISTOR CH 1/10W 100	1	
R20		ERJ6GEYG472	M.RESISTOR CH1/10W 4.7K	1	
R21		ERJ6GEYG183	M.RESISTOR CH 1/10W 18K	1	
R22		ERJ6GEYG821	M.RESISTOR CH 1/10W 820	1	
R23,24		ERJ6GEYG102	M.RESISTOR CH 1/10W 1K	2	
R25,26		ERJ6GEYG101	M.RESISTOR CH 1/10W 100	2	
R27		ERJ6GEYG122	M.RESISTOR CH 1/10W 1.2K	1	
R28		ERJ6GEYG471	M.RESISTOR CH 1/10W 470	1	
R29		ERJ6GEYG222	M.RESISTOR CH 1/10W 2.2K	1	
R30		ERJ6GEYG272	M.RESISTOR CH 1/10W 2.7K	1	
R31		VRE0034E333	M.RESISTOR CH 1/10W 33K	1	
R32		VRE0034E103	M.RESISTOR CH 1/10W 10K	1	
R33		ERJ6GEYG222	M.RESISTOR CH 1/10W 2.2K	1	
R34		ERJ6GEYG223	M.RESISTOR CH 1/10W 22K	1	
R35		ERJ6GEYG562	M.RESISTOR CH 1/10W 5.6K	1	
R36,37		ERJ6GEYG332	M.RESISTOR CH 1/10W 3.3K	2	
R38		ERJ6GEYG823	M.RESISTOR CH 1/10W 82K	1	
R39		ERJ6GEYG332	M.RESISTOR CH 1/10W 3.3K	1	
R40		ERJ6GEYG222	M.RESISTOR CH 1/10W 2.2K	1	
R41		ERJ6GEYG563	M.RESISTOR CH 1/10W 56K	1	
R42		ERJ6GEYG333	M.RESISTOR CH1/10W 33K	1	
R43		ERJ6GEYG332	M.RESISTOR CH 1/10W 3.3K	1	
R44		ERJ6GEYG272	M.RESISTOR CH 1/10W 2.7K	1	

Ref.No.		Part No.	Part Name & Description	Pcs	Remarks
R45		ERJ6GEYG273	M.RESISTOR CH 1/10W 27K	1	
R46		ERJ6GEYG224	M.RESISTOR CH 1/10W 220K	1	
R47		ERJ6GEYG472	M.RESISTOR CH1/10W 4.7K	1	
R48		ERJ6GEYG272	M.RESISTOR CH 1/10W 2.7K	1	
R49		ERJ6GEYG221	M.RESISTOR CH 1/10W 220	1	
R50		ERJ6GEYG391	M.RESISTOR CH 1/10W 390	1	
R51		VRE0034E273	M.RESISTOR CH 1/10W 27K	1	
R52		VRE0034E203	M.RESISTOR CH 1/10W 20K	1	
R53		VRE0034E153	M.RESISTOR CH 1/10W 15K	1	
R54		ERJ6GEYG220	M.RESISTOR CH 1/10W 22	1	
R55		ERJ6GEYG222	M.RESISTOR CH 1/10W 2.2K	1	
R56		ERJ6GEYG332	M.RESISTOR CH 1/10W 3.3K	1	
R57		ERJ6GEYG222	M.RESISTOR CH 1/10W 2.2K	1	
R58,59		ERJ6GEYG220	M.RESISTOR CH 1/10W 22	2	
R60,61		ERJ6GEYG152	M.RESISTOR CH 1/10W 1.5K	2	
R62,63		VRE0034E561	M.RESISTOR CH 1/10W 560	2	
R64		ERJ6GEYG150	M.RESISTOR CH1/10W 15	1	
R65		VRE0034E301	M.RESISTOR CH 1/10W 300	1	
R66		ERJ6GEYG220	M.RESISTOR CH 1/10W 22	1	
R67		ERJ6GEYG222	M.RESISTOR CH 1/10W 2.2K	1	
R68		ERJ6GEYG102	M.RESISTOR CH 1/10W 1K	1	
R69		ERJ6GEYG471	M.RESISTOR CH 1/10W 470	1	
R70		ERJ6GEYG681	M.RESISTOR CH 1/10W 680	1	
R71		ERJ6GEYG101	M.RESISTOR CH 1/10W 100	1	
R72		ERJ6GEYG472	M.RESISTOR CH1/10W 4.7K	1	
R73		ERJ6GEYG183	M.RESISTOR CH 1/10W 18K	1	
R74		ERJ6GEYG102	M.RESISTOR CH 1/10W 1K	1	
R75		ERJ6GEYG101	M.RESISTOR CH 1/10W 100	1	
R76		ERJ6GEYG102	M.RESISTOR CH 1/10W 1K	1	
R77		ERJ6GEYG101	M.RESISTOR CH 1/10W 100	1	
R78		ERJ6GEYG122	M.RESISTOR CH 1/10W 1.2K	1	
R79		ERJ6GEYG471	M.RESISTOR CH 1/10W 470	1	
R80		ERJ6GEYG222	M.RESISTOR CH 1/10W 2.2K	1	
R81		ERJ6GEYG272	M.RESISTOR CH 1/10W 2.7K	1	
R82		ERJ6GEYG223	M.RESISTOR CH 1/10W 22K	1	
R83		ERJ6GEYG222	M.RESISTOR CH 1/10W 2.2K	1	
R84		ERJ6GEYG220	M.RESISTOR CH 1/10W 22	1	
R85		ERJ6GEYG562	M.RESISTOR CH 1/10W 5.6K	1	
R86,87		ERJ6GEYG332	M.RESISTOR CH 1/10W 3.3K	2	
R88		ERJ6GEYG823	M.RESISTOR CH 1/10W 82K	1	
R89		ERJ6GEYG332	M.RESISTOR CH 1/10W 3.3K	1	
R90		ERJ6GEYG222	M.RESISTOR CH 1/10W 2.2K	1	
R91		ERJ6GEYG563	M.RESISTOR CH 1/10W 56K	1	
R92		ERJ6GEYG333	M.RESISTOR CH1/10W 33K	1	
R93		ERJ6GEYG332	M.RESISTOR CH 1/10W 3.3K	1	
R94		ERJ6GEYG273	M.RESISTOR CH 1/10W 27K	1	
R95		ERJ6GEYG272	M.RESISTOR CH 1/10W 2.7K	1	
R96		ERJ6GEYG472	M.RESISTOR CH1/10W 4.7K	1	
R97		ERJ6GEYG224	M.RESISTOR CH 1/10W 220K	1	
R98		ERJ6GEYG272	M.RESISTOR CH 1/10W 2.7K	1	
R99		ERJ6GEYG221	M.RESISTOR CH 1/10W 220	1	
R100		ERJ6GEYG222	M.RESISTOR CH 1/10W 2.2K	1	
R101		ERJ6GEYG332	M.RESISTOR CH 1/10W 3.3K	1	
R102		ERJ6GEYG272	M.RESISTOR CH 1/10W 2.7K	1	
R103		VRE0034E223	M.RESISTOR CH 1/10W 22K	1	
R104		VRE0034E153	M.RESISTOR CH 1/10W 15K	1	
R105		ERJ6GEYG272	M.RESISTOR CH 1/10W 2.7K	1	
R109,10		ERJ6GEY0R00	M.RESISTOR CH 1/10W 0	2	
R133		ERJ6GEYG224	M.RESISTOR CH 1/10W 220K	1	
R135,36		ERJ6GEYG822	M.RESISTOR CH1/10W 8.2K	2	
R137		ERJ6GEYG222	M.RESISTOR CH 1/10W 2.2K	1	
R138		ERJ6GEYG102	M.RESISTOR CH 1/10W 1K	1	
R139		ERJ6GEYG222	M.RESISTOR CH 1/10W 2.2K	1	
R140		ERJ6GEYG104	M.RESISTOR CH 1/10W 100K	1	
R141		ERJ6GEYG470	M.RESISTOR CH 1/10W 47	1	
R142		ERJ6GEYG681	M.RESISTOR CH 1/10W 680	1	
R143,44		ERJ6GEYG301	M.RESISTOR CH 1/10W 300	2	
R145		ERJ6GEYG153	M.RESISTOR CH 1/10W 15K	1	
R146		ERJ6GEYG105	M.RESISTOR CH 1/10W 1M	1	
R148,49		ERJ6GEYG103	M.RESISTOR CH 1/10W 10K	2	
R150		ERJ6GEYG104	M.RESISTOR CH 1/10W 100K	1	
R151		ERJ6GEYG102	M.RESISTOR CH 1/10W 1K	1	
R152		ERJ6GEYG222	M.RESISTOR CH 1/10W 2.2K	1	
R153		ERJ6GEYG333	M.RESISTOR CH1/10W 33K	1	
R154		ERJ6GEYG104	M.RESISTOR CH 1/10W 100K	1	

Refer to the P.C.BOARDS LIST, page 6-1-1, before using this page.

Ref.No.		Part No.	Part Name & Description	Pcs	Remarks
R155		ERJ6GEYG332	M.RESISTOR CH 1/10W 3.3K	1	
R156		ERJ6GEYG472	M.RESISTOR CH1/10W 4.7K	1	
R157		ERJ6GEYG103	M.RESISTOR CH 1/10W 10K	1	
R158		ERJ6GEYG221	M.RESISTOR CH 1/10W 220	1	
R159		ERJ6GEYG681	M.RESISTOR CH 1/10W 680	1	
R160,61		ERJ6GEYG301	M.RESISTOR CH 1/10W 300	2	
R162,63		ERJ6GEYG103	M.RESISTOR CH 1/10W 10K	2	
R166,67		ERJ6GEYG102	M.RESISTOR CH 1/10W 1K	2	
R168		ERJ6GEYG470	M.RESISTOR CH 1/10W 47	1	
R169,70		ERJ6GEYG272	M.RESISTOR CH 1/10W 2.7K	2	
R171		ERJ6GEYG102	M.RESISTOR CH 1/10W 1K	1	
R172		ERJ6GEYG272	M.RESISTOR CH 1/10W 2.7K	1	
R173		ERJ6GEYG470	M.RESISTOR CH 1/10W 47	1	
R174		ERJ6GEY0R00	M.RESISTOR CH 1/10W 0	1	
R200		ERJ6GEYG272	M.RESISTOR CH 1/10W 2.7K	1	
R201		ERJ6GEYG222	M.RESISTOR CH 1/10W 2.2K	1	
R202,03		VRE0034E331	M.RESISTOR CH 1/10W 330	2	
R204		ERJ6GEYG470	M.RESISTOR CH 1/10W 47	1	
R205		ERJ6GEYG272	M.RESISTOR CH 1/10W 2.7K	1	
R206,07		VRE0034E102	M.RESISTOR CH 1/10W 1K	2	
R209		VRE0034E621	M.RESISTOR CH 1/10W 620	1	
R210,11		ERJ6GEYG272	M.RESISTOR CH 1/10W 2.7K	2	
R212		ERJ6GEYG102	M.RESISTOR CH 1/10W 1K	1	
R213		ERJ6GEYG221	M.RESISTOR CH 1/10W 220	1	
R214		ERJ6GEYG681	M.RESISTOR CH 1/10W 680	1	
R215		ERJ6GEYG101	M.RESISTOR CH 1/10W 100	1	
R216		ERJ6GEYG102	M.RESISTOR CH 1/10W 1K	1	
R217		ERJ6GEYG101	M.RESISTOR CH 1/10W 100	1	
R218		ERJ6GEYG102	M.RESISTOR CH 1/10W 1K	1	
R219		ERJ6GEYG152	M.RESISTOR CH 1/10W 1.5K	1	
R220		ERJ6GEYG222	M.RESISTOR CH 1/10W 2.2K	1	
R221		ERJ6GEYG471	M.RESISTOR CH 1/10W 470	1	
R222,23		ERJ6GEYG222	M.RESISTOR CH 1/10W 2.2K	2	
R224		ERJ6GEYG101	M.RESISTOR CH 1/10W 100	1	
R225		ERJ6GEYG683	M.RESISTOR CH 1/10W 68K	1	
R226		ERJ6GEYG272	M.RESISTOR CH 1/10W 2.7K	1	
R227,28		ERJ6GEYG103	M.RESISTOR CH 1/10W 10K	2	
R229		ERJ6GEYG102	M.RESISTOR CH 1/10W 1K	1	
R230		ERJ6GEYG222	M.RESISTOR CH 1/10W 2.2K	1	
R231		ERJ6GEYG470	M.RESISTOR CH 1/10W 47	1	
R233		ERJ6GEYG102	M.RESISTOR CH 1/10W 1K	1	
R234		ERJ6GEYG681	M.RESISTOR CH 1/10W 680	1	
R235		ERJ6GEYG561	M.RESISTOR CH1/10W 560	1	
R236		ERJ6GEYG121	M.RESISTOR CH 1/10W 120	1	
R237		ERJ6GEYG391	M.RESISTOR CH 1/10W 390	1	
R238		ERJ6GEYG473	M.RESISTOR CH1/10W 47K	1	
R240		ERJ6GEYG182	M.RESISTOR CH 1/10W 1.8K	1	
R241		ERJ6GEYG273	M.RESISTOR CH 1/10W 27K	1	
R242		ERJ6GEYG470	M.RESISTOR CH 1/10W 47	1	
R243		ERJ6GEYG182	M.RESISTOR CH 1/10W 1.8K	1	
R244		VRE0034E151	M.RESISTOR CH 1/10W 150	1	
R245		ERJ6GEYG152	M.RESISTOR CH 1/10W 1.5K	1	
R246		ERJ6GEYG331	M.RESISTOR CH 1/10W 330	1	
R257		VRE0034E331	M.RESISTOR CH 1/10W 330	1	
R258-60		VRE0034E301	M.RESISTOR CH 1/10W 300	3	
R262,63		VRE0034E102	M.RESISTOR CH 1/10W 1K	2	
R264		VRE0034E821	M.RESISTOR CH 1/10W 820	1	
R265,66		VRE0034E102	M.RESISTOR CH 1/10W 1K	2	
R268		VRE0034E471	M.RESISTOR CH 1/10W 470	1	
R269		ERJ6GEYG272	M.RESISTOR CH 1/10W 2.7K	1	
R270		ERJ6GEY0R00	M.RESISTOR CH 1/10W 0	1	
R271		ERJ6GEYG331	M.RESISTOR CH 1/10W 330	1	
R272		ERJ6GEYG272	M.RESISTOR CH 1/10W 2.7K	1	
R273		ERJ6GEYG102	M.RESISTOR CH 1/10W 1K	1	
R274		ERJ6GEYG101	M.RESISTOR CH 1/10W 100	1	
R275		ERJ6GEYG102	M.RESISTOR CH 1/10W 1K	1	
R276		ERJ6GEYG101	M.RESISTOR CH 1/10W 100	1	
R277		ERJ6GEYG152	M.RESISTOR CH 1/10W 1.5K	1	
R278		ERJ6GEYG471	M.RESISTOR CH 1/10W 470	1	
R279		ERJ6GEYG222	M.RESISTOR CH 1/10W 2.2K	1	
R280		ERJ6GEYG152	M.RESISTOR CH 1/10W 1.5K	1	
R281		ERJ6GEYG222	M.RESISTOR CH 1/10W 2.2K	1	
R282		ERJ6GEYG101	M.RESISTOR CH 1/10W 100	1	
R288		ERJ6GEYG102	M.RESISTOR CH 1/10W 1K	1	
R290		ERJ6GEYG470	M.RESISTOR CH 1/10W 47	1	

Ref.No.		Part No.	Part Name & Description	Pcs	Remarks
R291		ERJ6GEYG222	M.RESISTOR CH 1/10W 2.2K	1	
R292		ERJ6GEYG102	M.RESISTOR CH 1/10W 1K	1	
R293		ERJ6GEYG152	M.RESISTOR CH 1/10W 1.5K	1	
R294		ERJ6GEYG470	M.RESISTOR CH 1/10W 47	1	
R298		ERJ6GEYG470	M.RESISTOR CH 1/10W 47	1	
R299		ERJ6GEYG272	M.RESISTOR CH 1/10W 2.7K	1	
R300,01		VRE0034E102	M.RESISTOR CH 1/10W 1K	2	
R302		VRE0034E391	M.RESISTOR CH 1/10W 390	1	
R303		ERJ6GEYG272	M.RESISTOR CH 1/10W 2.7K	1	
R306		ERJ6GEYG683	M.RESISTOR CH 1/10W 68K	1	
R307		ERJ6GEYG821	M.RESISTOR CH 1/10W 820	1	
R308		ERJ6GEYG273	M.RESISTOR CH 1/10W 27K	1	
R309		ERJ6GEYG272	M.RESISTOR CH 1/10W 2.7K	1	
R310		ERJ6GEYG682	M.RESISTOR CH 1/10W 6.8K	1	
R311		ERJ6GEYG272	M.RESISTOR CH 1/10W 2.7K	1	
R312		ERJ6GEYG222	M.RESISTOR CH 1/10W 2.2K	1	
R313		ERJ6GEYG101	M.RESISTOR CH 1/10W 100	1	
R314		ERJ6GEYG683	M.RESISTOR CH 1/10W 68K	1	
R316-18		VRE0034E301	M.RESISTOR CH 1/10W 300	3	
R320,21		VRE0034E102	M.RESISTOR CH 1/10W 1K	2	
R322		VRE0034E821	M.RESISTOR CH 1/10W 820	1	
R323.34		VRE0034E102	M.RESISTOR CH 1/10W 1K	2	
R326		VRE0034E471	M.RESISTOR CH 1/10W 470	1	
R327		ERJ6GEYG272	M.RESISTOR CH 1/10W 2.7K	1	
R328		ERJ6GEYG152	M.RESISTOR CH 1/10W 1.5K	1	
R329		ERJ6GEY0R00	M.RESISTOR CH 1/10W 0	1	
R330		ERJ6GEYG331	M.RESISTOR CH 1/10W 330	1	
R331		ERJ6GEYG102	M.RESISTOR CH 1/10W 1K	1	
R332		ERJ6GEYG101	M.RESISTOR CH 1/10W 100	1	
R333		ERJ6GEYG102	M.RESISTOR CH 1/10W 1K	1	
R334		ERJ6GEYG101	M.RESISTOR CH 1/10W 100	1	
R335		ERJ6GEYG152	M.RESISTOR CH 1/10W 1.5K	1	
R336		ERJ6GEYG471	M.RESISTOR CH 1/10W 470	1	
R337		ERJ6GEYG222	M.RESISTOR CH 1/10W 2.2K	1	
R338,39		ERJ6GEYG152	M.RESISTOR CH 1/10W 1.5K	2	
R340		ERJ6GEYG101	M.RESISTOR CH 1/10W 100	1	
RR342		ERJ6GEYG683	M.RESISTOR CH 1/10W 68K	1	
R346		ERJ6GEYG102	M.RESISTOR CH 1/10W 1K	1	
R347		ERJ6GEYG470	M.RESISTOR CH 1/10W 47	1	
R348		ERJ6GEYG222	M.RESISTOR CH 1/10W 2.2K	1	
R349		ERJ6GEYG470	M.RESISTOR CH 1/10W 47	1	
R350		ERJ6GEYG152	M.RESISTOR CH 1/10W 1.5K	1	
R351		ERJ6GEYG391	M.RESISTOR CH 1/10W 390	1	
R355		ERJ6GEYG470	M.RESISTOR CH 1/10W 47	1	
R356		ERJ6GEYG222	M.RESISTOR CH 1/10W 2.2K	1	
R357,58		VRE0034E102	M.RESISTOR CH 1/10W 1K	2	
R359		VRE0034E271	M.RESISTOR CH 1/10W 270	1	
R360		ERJ6GEYG272	M.RESISTOR CH 1/10W 2.7K	1	
R364		ERJ6GEYG561	M.RESISTOR CH 1/10W 560	1	
R365		ERJ6GEYG273	M.RESISTOR CH 1/10W 27K	1	
R366		ERJ6GEYG272	M.RESISTOR CH 1/10W 2.7K	1	
R367		ERJ6GEYG682	M.RESISTOR CH 1/10W 6.8K	1	
R368		ERJ6GEYG272	M.RESISTOR CH 1/10W 2.7K	1	
R369		ERJ6GEYG222	M.RESISTOR CH 1/10W 2.2K	1	
R370		ERJ6GEYG101	M.RESISTOR CH 1/10W 100	1	
R371		ERJ6GEYG683	M.RESISTOR CH 1/10W 68K	1	
R372		ERJ6GEYG332	M.RESISTOR CH 1/10W 3.3K	1	
R373		ERJ6GEYG562	M.RESISTOR CH 1/10W 5.6K	1	
R374,75		ERJ6GEYG223	M.RESISTOR CH 1/10W 22K	2	
R376		ERJ6GEYG332	M.RESISTOR CH 1/10W 3.3K	1	
R396		ERJ6GEYG332	M.RESISTOR CH 1/10W 3.3K	1	
R397		ERJ6GEYG472	M.RESISTOR CH1/10W 4.7K	1	
R398		ERJ6GEYG153	M.RESISTOR CH 1/10W 15K	1	
R399		ERJ6GEYG221	M.RESISTOR CH 1/10W 220	1	
R400		ERJ6GEYG472	M.RESISTOR CH1/10W 4.7K	1	
R401,02		ERJ6GEYG102	M.RESISTOR CH 1/10W 1K	2	
R404		ERJ6GEYG102	M.RESISTOR CH 1/10W 1K	1	
R405,06		ERJ6GEYG221	M.RESISTOR CH 1/10W 220	2	
R409		VRE0034E331	M.RESISTOR CH 1/10W 330	1	
R410		ERJ6GEYG390	M.RESISTOR CH 1/10W 39	1	
R411		ERJ6GEYG221	M.RESISTOR CH 1/10W 220	1	
R412		VRE0034E391	M.RESISTOR CH 1/10W 390	1	
R413-16		ERJ6GEYG223	M.RESISTOR CH 1/10W 22K	4	
R417		VRE0034E391	M.RESISTOR CH 1/10W 390	1	
R418		ERJ6GEYG151	M.RESISTOR CH 1/10W 150	1	

Refer to the P.C.BOARDS LIST, page 6-1-1, before using this page.

Ref.No.		Part No.	Part Name & Description	Pcs	Remarks
R421		ERJ6GEYG221	M.RESISTOR CH 1/10W 220	1	
R422		VRE0034E391	M.RESISTOR CH 1/10W 390	1	
R423		ERJ6GEY0R00	M.RESISTOR CH 1/10W 0	1	
R424		ERJ6GEYG101	M.RESISTOR CH 1/10W 100	1	
R425,26		ERJ6GEYG470	M.RESISTOR CH 1/10W 47	2	
R427		ERJ6GEYG221	M.RESISTOR CH 1/10W 220	1	
R428		VRE0034E391	M.RESISTOR CH 1/10W 390	1	
R429		ERJ6GEYG392	M.RESISTOR CH 1/10W 3.9K	1	
R430		ERJ6GEYG102	M.RESISTOR CH 1/10W 1K	1	
R431		VRE0034E821	M.RESISTOR CH 1/10W 820	1	
R432,33		ERJ6GEYG102	M.RESISTOR CH 1/10W 1K	2	
R434		ERJ6GEYG123	M.RESISTOR CH1/10W 12K	1	
R435		ERJ6GEYG682	M.REISITOR CH 1/10W 6.8K	1	
R436		ERJ6GEYG822	M.RESISTOR CH1/10W 8.2K	1	
R437		ERJ6GEYG123	M.RESISTOR CH1/10W 12K	1	
R438		ERJ6GEYG152	M.RESISTOR CH 1/10W 1.5K	1	
R439		ERJ6GEYG102	M.RESISTOR CH 1/10W 1K	1	
R440		VRE0034E821	M.RESISTOR CH 1/10W 820	1	
R441		ERJ6GEYG102	M.RESISTOR CH 1/10W 1K	1	
R442		ERJ6GEYG222	M.RESISTOR CH 1/10W 2.2K	1	
R443		ERJ6GEY0R00	M.RESISTOR CH 1/10W 0	1	
R501		ERJ6GEYG102	M.RESISTOR CH 1/10W 1K	1	
R502		ERJ6GEYG330	M.RESISTOR CH 1/10W 33	1	
R503,04		ERJ6GEYG222	M.RESISTOR CH 1/10W 2.2K	2	
R505,06		ERJ6GEYG102	M.RESISTOR CH 1/10W 1K	2	
R507		ERJ6GEYG331	M.RESISTOR CH 1/10W 330	1	
R508		ERJ6GEYG221	M.RESISTOR CH 1/10W 220	1	
R509		ERJ6GEYG152	M.RESISTOR CH 1/10W 1.5K	1	
R510		ERJ6GEYG391	M.RESISTOR CH 1/10W 390	1	
R511		ERJ6GEYG102	M.RESISTOR CH 1/10W 1K	1	
R512		ERJ6GEYG152	M.RESISTOR CH 1/10W 1.5K	1	
R513		ERJ6GEYG683	M.RESISTOR CH 1/10W 68K	1	
R514		ERJ6GEYG182	M.RESISTOR CH 1/10W 1.8K	1	
R515		ERJ6GEYG101	M.RESISTOR CH 1/10W 100	1	
R516		ERJ6GEYG152	M.RESISTOR CH 1/10W 1.5K	1	
R517		ERJ6GEYG470	M.RESISTOR CH 1/10W 47	1	
R518		ERJ6GEYG273	M.RESISTOR CH 1/10W 27K	1	
R519		ERJ6GEYG331	M.RESISTOR CH 1/10W 330	1	
R520		ERJ6GEYG681	M.RESISTOR CH 1/10W 680	1	
R521		ERJ6GEYG391	M.RESISTOR CH 1/10W 390	1	
R522		ERJ6GEYG102	M.RESISTOR CH 1/10W 1K	1	
R523		ERJ6GEYG681	M.RESISTOR CH 1/10W 680	1	
R524		ERJ6GEYG561	M.RESISTOR CH1/10W 560	1	
R525		ERJ6GEYG182	M.RESISTOR CH 1/10W 1.8K	1	
R526		ERJ6GEYG470	M.RESISTOR CH 1/10W 47	1	
R527		ERJ6GEYG182	M.RESISTOR CH 1/10W 1.8K	1	
R528		VRE0034E151	M.RESISTOR CH 1/10W 150	1	
R529		ERJ6GEYG152	M.RESISTOR CH 1/10W 1.5K	1	
R530		ERJ6GEYG470	M.RESISTOR CH 1/10W 47	1	
R542		ERJ6GEYG821	M.RESISTOR CH 1/10W 820	1	
R543		ERJ6GEYG392	M.RESISTOR CH 1/10W 3.9K	1	
R544		ERJ6GEYG561	M.RESISTOR CH1/10W 560	1	
R545		ERJ6GEYG391	M.RESISTOR CH 1/10W 390	1	
R546		ERJ6GEYG561	M.RESISTOR CH1/10W 560	1	
R547		ERJ6GEYG391	M.RESISTOR CH 1/10W 390	1	
R549		ERJ6GEYG273	M.RESISTOR CH 1/10W 27K	1	
R551		ERJ6GEYG391	M.RESISTOR CH 1/10W 390	1	
R552		ERJ6GEYG102	M.RESISTOR CH 1/10W 1K	1	
R553		ERJ6GEYG681	M.RESISTOR CH 1/10W 680	1	
R554		ERJ6GEYG561	M.RESISTOR CH1/10W 560	1	
R555		ERJ6GEYG182	M.RESISTOR CH 1/10W 1.8K	1	
R556		ERJ6GEYG470	M.RESISTOR CH 1/10W 47	1	
R557		ERJ6GEYG182	M.RESISTOR CH 1/10W 1.8K	1	
R558		VRE0034E151	M.RESISTOR CH 1/10W 150	1	
R559		ERJ6GEYG152	M.RESISTOR CH 1/10W 1.5K	1	
R560		ERJ6GEYG470	M.RESISTOR CH 1/10W 47	1	
R564		ERJ6GEYG102	M.RESISTOR CH 1/10W 1K	1	
R565		ERJ6GEYG222	M.RESISTOR CH 1/10W 2.2K	1	
R566		ERJ6GEYG122	M.RESISTOR CH 1/10W 1.2K	1	
R567		ERJ6GEYG221	M.RESISTOR CH 1/10W 220	1	
R568		ERJ6GEYG470	M.RESISTOR CH 1/10W 47	1	
R569		ERJ6GEYG153	M.RESISTOR CH 1/10W 15K	1	
R570		ERJ6GEYG223	M.RESISTOR CH 1/10W 22K	1	
R571		ERJ6GEYG470	M.RESISTOR CH 1/10W 47	1	
R572		ERJ6GEYG472	M.RESISTOR CH1/10W 4.7K	1	

Ref.No.		Part No.	Part Name & Description	Pcs	Remarks
R573,74		ERJ6GEYG102	M.RESISTOR CH 1/10W 1K	2	
R576		ERJ6GEYG103	M.RESISTOR CH 1/10W 10K	1	
R577		ERJ6GEYG102	M.RESISTOR CH 1/10W 1K	1	
R578		ERJ6GEYG472	M.RESISTOR CH1/10W 4.7K	1	
R579,80		ERJ6GEYG121	M.RESISTOR CH 1/10W 120	2	
R581,82		ERJ6GEYG821	M.RESISTOR CH 1/10W 820	2	
R583		ERJ6GEYG470	M.RESISTOR CH 1/10W 47	1	
R584		ERJ6GEYG153	M.RESISTOR CH 1/10W 15K	1	
R585		ERJ6GEYG223	M.RESISTOR CH 1/10W 22K	1	
R586		ERJ6GEYG470	M.RESISTOR CH 1/10W 47	1	
R587		ERJ6GEYG472	M.RESISTOR CH1/10W 4.7K	1	
R588		ERJ6GEYG102	M.RESISTOR CH 1/10W 1K	1	
R590		ERJ6GEYG103	M.RESISTOR CH 1/10W 10K	1	
R591		ERJ6GEYG102	M.RESISTOR CH 1/10W 1K	1	
R592		ERJ6GEYG472	M.RESISTOR CH1/10W 4.7K	1	
R593,94		ERJ6GEYG121	M.RESISTOR CH 1/10W 120	2	
R595,96		ERJ6GEYG821	M.RESISTOR CH 1/10W 820	2	
R597		ERJ6GEYG102	M.RESISTOR CH 1/10W 1K	1	
R598		ERJ6GEYG103	M.RESISTOR CH 1/10W 10K	1	
R599		ERJ6GEYG822	M.RESISTOR CH1/10W 8.2K	1	
R600		ERJ6GEYG102	M.RESISTOR CH 1/10W 1K	1	
R601,02		VRE0034E301	M.RESISTOR CH 1/10W 300	2	
R603		ERJ6GEYG152	M.RESISTOR CH 1/10W 1.5K	1	
R604		ERJ6GEYG151	M.RESISTOR CH 1/10W 150	1	
R605		ERJ6GEYG102	M.RESISTOR CH 1/10W 1K	1	
R606		ERJ6GEYG182	M.RESISTOR CH 1/10W 1.8K	1	
R607		ERJ6GEYG332	M.RESISTOR CH 1/10W 3.3K	1	
R608		ERJ6GEYG470	M.RESISTOR CH 1/10W 47	1	
R609,10		ERJ6GEYG122	M.RESISTOR CH 1/10W 1.2K	2	
R611		ERJ6GEY0R00	M.RESISTOR CH 1/10W 0	1	
R612		ERJ6GEYG272	M.RESISTOR CH 1/10W 2.7K	1	
R613		ERJ6GEYG182	M.RESISTOR CH 1/10W 1.8K	1	
R614		ERJ6GEYG392	M.RESISTOR CH 1/10W 3.9K	1	
R615		ERJ6GEYG151	M.RESISTOR CH 1/10W 150	1	
R616		ERJ6GEYG222	M.RESISTOR CH 1/10W 2.2K	1	
R617		ERJ6GEYG330	M.RESISTOR CH 1/10W 33	1	
R618		ERJ6GEYG222	M.RESISTOR CH 1/10W 2.2K	1	
R619		ERJ6GEYG102	M.RESISTOR CH 1/10W 1K	1	
R620		ERJ6GEYG151	M.RESISTOR CH 1/10W 150	1	
R621		ERJ6GEYG821	M.RESISTOR CH 1/10W 820	1	
R622		ERJ6GEYG152	M.RESISTOR CH 1/10W 1.5K	1	
R623		ERJ6GEYG470	M.RESISTOR CH 1/10W 47	1	
R630		ERJ6GEYG272	M.RESISTOR CH 1/10W 2.7K	1	
R632		ERJ6GEY0R00	M.RESISTOR CH 1/10W 0	1	
R634		ERJ6GEYG683	M.RESISTOR CH 1/10W 68K	1	
R635		ERJ6GEYG104	M.RESISTOR CH 1/10W 100K	1	
R636		ERJ6GEYG562	M.RESISTOR CH 1/10W 5.6K	1	
R637		ERJ6GEYG183	M.RESISTOR CH 1/10W 18K	1	
R642		ERJ6GEYG332	M.RESISTOR CH 1/10W 3.3K	1	
R643		ERJ6GEYG101	M.RESISTOR CH 1/10W 100	1	
R644		ERJ6GEYG183	M.RESISTOR CH 1/10W 18K	1	
R645		ERJ6GEYG182	M.RESISTOR CH 1/10W 1.8K	1	
R646		ERJ6GEYG681	M.RESISTOR CH 1/10W 680	1	
R647		ERJ6GEYG471	M.RESISTOR CH 1/10W 470	1	
R648,49		ERJ6GEYG473	M.RESISTOR CH1/10W 47K	2	
R650		ERJ6GEYG221	M.RESISTOR CH 1/10W 220	1	
R651		ERJ6GEYG682	M.REISITOR CH 1/10W 6.8K	1	
R652		ERJ6GEYG182	M.RESISTOR CH 1/10W 1.8K	1	
R653		ERJ6GEYG102	M.RESISTOR CH 1/10W 1K	1	
R654,55		ERJ6GEYG101	M.RESISTOR CH 1/10W 100	2	
R656		ERJ6GEYG122	M.RESISTOR CH 1/10W 1.2K	1	
R657		ERJ6GEYG182	M.RESISTOR CH 1/10W 1.8K	1	
R658		ERJ6GEYG102	M.RESISTOR CH 1/10W 1K	1	
R659		ERJ6GEYG681	M.RESISTOR CH 1/10W 680	1	
R660		ERJ6GEYG102	M.RESISTOR CH 1/10W 1K	1	
R661		ERJ6GEYG222	M.RESISTOR CH 1/10W 2.2K	1	
R662		ERJ6GEYG182	M.RESISTOR CH 1/10W 1.8K	1	
R663		ERJ6GEYG222	M.RESISTOR CH 1/10W 2.2K	1	
R664		ERJ6GEYG682	M.REISITOR CH 1/10W 6.8K	1	
R665		ERJ6GEYG122	M.RESISTOR CH 1/10W 1.2K	1	
R666		ERJ6GEYG102	M.RESISTOR CH 1/10W 1K	1	
R667		ERJ6GEYG182	M.RESISTOR CH 1/10W 1.8K	1	
R668		ERJ6GEYG102	M.RESISTOR CH 1/10W 1K	1	
R669		ERJ6GEYG681	M.RESISTOR CH 1/10W 680	1	
R670		ERJ6GEYG331	M.RESISTOR CH 1/10W 330	1	

Refer to the P.C.BOARDS LIST, page 6-1-1, before using this page.

Ref.No.		Part No.	Part Name & Description	Pcs	Remarks
R671		ERJ6GEYG152	M.RESISTOR CH 1/10W 1.5K	1	
R672,73		ERJ6GEYG102	M.RESISTOR CH 1/10W 1K	2	
R674		ERJ6GEYG561	M.RESISTOR CH1/10W 560	1	
R675		ERJ6GEYJ271	M.RESISTOR CH 1/10W 270	1	
R676		ERJ6GEYG152	M.RESISTOR CH 1/10W 1.5K	1	
R677		ERJ6GEYG102	M.RESISTOR CH 1/10W 1K	1	
R678		ERJ6GEYG152	M.RESISTOR CH 1/10W 1.5K	1	
R679		ERJ6GEYG102	M.RESISTOR CH 1/10W 1K	1	
R680		ERJ6GEYG561	M.RESISTOR CH1/10W 560	1	
R681		ERJ6GEYG330	M.RESISTOR CH 1/10W 33	1	
R682		ERJ6GEYG681	M.RESISTOR CH 1/10W 680	1	
R683		ERJ6GEYG124	M.RESISTOR CH1/10W 120K	1	
R684		ERJ6GEYG152	M.RESISTOR CH 1/10W 1.5K	1	
R685		ERJ6GEYG102	M.RESISTOR CH 1/10W 1K	1	
R686		ERJ6GEYG181	M.RESISTOR CH 1/10W 180	1	
R687		ERJ6GEYG102	M.RESISTOR CH 1/10W 1K	1	
R688		ERJ6GEYG561	M.RESISTOR CH1/10W 560	1	
R689		ERJ6GEYG152	M.RESISTOR CH 1/10W 1.5K	1	
R690,91		ERJ6GEYG122	M.RESISTOR CH 1/10W 1.2K	2	
R692,93		ERJ6GEYG470	M.RESISTOR CH 1/10W 47	2	
R694,95		ERJ6GEYG102	M.RESISTOR CH 1/10W 1K	2	
R696,97		ERJ6GEYG122	M.RESISTOR CH 1/10W 1.2K	2	
R698,99		ERJ6GEYG470	M.RESISTOR CH 1/10W 47	2	
R700,01		ERJ6GEYG102	M.RESISTOR CH 1/10W 1K	2	
R708		ERJ6GEY0R00	M.RESISTOR CH 1/10W 0	1	
R710		ERJ6GEY0R00	M.RESISTOR CH 1/10W 0	1	
R712,13		ERJ6GEY0R00	M.RESISTOR CH 1/10W 0	2	
R716		ERJ6GEYG101	M.RESISTOR CH 1/10W 100	1	
R717		ERJ6GEYG681	M.RESISTOR CH 1/10W 680	1	
R718		ERJ6GEYG154	M.RESISTOR CH 1/10W 150K	1	
R719		ERJ6GEYG102	M.RESISTOR CH 1/10W 1K	1	
R720		ERJ6GEYG681	M.RESISTOR CH 1/10W 680	1	
R721		ERJ6GEYG470	M.RESISTOR CH 1/10W 47	1	
R722		ERJ6GEYG182	M.RESISTOR CH 1/10W 1.8K	1	
R723		VRE0034E151	M.RESISTOR CH 1/10W 150	1	
R724		ERJ6GEYG152	M.RESISTOR CH 1/10W 1.5K	1	
R725		ERJ6GEYG470	M.RESISTOR CH 1/10W 47	1	
R726		ERJ6GEYG472	M.RESISTOR CH1/10W 4.7K	1	
R727		ERJ6GEYG103	M.RESISTOR CH 1/10W 10K	1	
R728		ERJ6GEYG561	M.RESISTOR CH1/10W 560	1	
R729		ERJ6GEYG391	M.RESISTOR CH 1/10W 390	1	
R730		ERJ6GEYG561	M.RESISTOR CH1/10W 560	1	
R731		ERJ6GEYG391	M.RESISTOR CH 1/10W 390	1	
R732		ERJ6GEYG561	M.RESISTOR CH1/10W 560	1	
R733		ERJ6GEYG391	M.RESISTOR CH 1/10W 390	1	
R734		ERJ6GEYG561	M.RESISTOR CH1/10W 560	1	
R735		ERJ6GEYG391	M.RESISTOR CH 1/10W 390	1	
R736		ERJ6GEYG101	M.RESISTOR CH 1/10W 100	1	
R737		ERJ6GEYG472	M.RESISTOR CH1/10W 4.7K	1	
R738		ERJ6GEYG822	M.RESISTOR CH1/10W 8.2K	1	
R741		ERJ6GEYG105	M.RESISTOR CH 1/10W 1M	1	
R742		ERJ6GEYG122	M.RESISTOR CH 1/10W 1.2K	1	
R743		ERJ6GEYG472	M.RESISTOR CH1/10W 4.7K	1	
R744		ERJ6GEY0R00	M.RESISTOR CH 1/10W 0	1	
R883		ERJ6GEYG103	M.RESISTOR CH 1/10W 10K	1	
R923		ERJ6GEYG272	M.RESISTOR CH 1/10W 2.7K	1	
R924		ERJ6GEYG822	M.RESISTOR CH1/10W 8.2K	1	
R1001		ERJ6GEYG681	M.RESISTOR CH 1/10W 680	1	
R1002		ERJ6GEYG621	M.RESISTOR CH 1/10W 620	1	
SW200		VSS0126	SWITCH	1	
SW201		VSS0207	SWITCH	1	
SW202,03		VJP1990	CONNECTOR	2	
TH501-04		ERTD2FGL102S	THERMISTOR	4	
TP1-P4		VJR0582	PACK PIN	4	
TP6,P7		VJR0582	PACK PIN	2	
TP201-04		VJR0582	PACK PIN	4	

Ref.No.		Part No.	Part Name & Description	Pcs	Remarks
TP206,07		VJR0582	PACK PIN	2	
TP501-03		VJR0582	PACK PIN	3	
TP505-07		VJR0582	PACK PIN	3	
TPG1,G2		VJR0582	PACK PIN	2	
TPG201		VJR0582	PACK PIN	1	
TPG501		VJR0582	PACK PIN	1	
VC201		ECV1ZW20X60	V.CAPACITOR 20P	1	
VC501		ECV1ZW30X53	V.CAPACITOR 30P	1	
VR1		VRV0109B201	V.RESISTOR 200	1	
VR2		VRV0109B502	V.RESISTOR 5K	1	
VR3		VRV0109B501	V.RESISTOR 500	1	
VR4		VRV0109B502	V.RESISTOR 5K	1	
VR200		VRV0064B501	V.RESISTOR 500	1	
VR201		VRV0110B503	V.RESISTOR 50K	1	
VR202		VRV0064B103	V.RESISTOR 10K	1	
VR203		VRV0109B501	V.RESISTOR 500	1	
VR205		VRV0109B501	V.RESISTOR 500	1	
VR207		VRV0109B201	V.RESISTOR 200	1	
VR208,09		VRV0109B501	V.RESISTOR 500	2	
VR210-13		VRV0109B102	V.RESISTOR 1K	4	
VR501		VRV0109B501	V.RESISTOR 500	1	
VR502		VRV0109B503	V.RESISTOR 50K	1	
VR503-06		VRV0110B503	V.RESISTOR 50K	4	
VR507		VRV0109B201	V.RESISTOR 200	1	
VR508,09		VRV0109B101	V.RESISTOR 100	2	
VR510		VRV0109B203	V.RESISTOR 20K	1	
VR511		VRV0109B502	V.RESISTOR 5K	1	
VR512		VRV0110B503	V.RESISTOR 50K	1	
VR513,14		VRV0109B102	V.RESISTOR 1K	2	
VR515,16		VRV0109B501	V.RESISTOR 500	2	
VR517		VRV0110B503	V.RESISTOR 50K	1	
			MISCELLANEOUS		
		VML2143	CARD PULLER	1	
		VML2144	CARD PULLER	1	
		VMS4174	PIN	6	
		VMZ1547	BARRIER	1	
		VSC3056	SHIELD CASE	1	
		VXA3966	P.C.B. SHIELD PLATE	1	
		XNG26E	NUT	4	
		XYNV3+K6FR	SCREW	6	
		XYN26+C12	SCREW	4	

Refer to the P.C.BOARDS LIST, page 6-1-1, before using this page.

Ref.No.		Part No.	Part Name & Description	Pcs	Remarks
	■	VEP88063C	P.C.BOARD W/COMPONENT		
			W2 ENCODER		
	■	VEP80632A	P.C.BOARD W/COMPONENT		ON VEP88063C
			W2S SC SUB		
			CAPACITORS		
C1		ECUM1H103KBN	C.CAPACITOR CH 50V 0.01U	1	
C2		ECEA1CU221	E.CAPACITOR 16V 220U	1	
C3		ECUM1H103KBN	C.CAPACITOR CH 50V 0.01U	1	
C4		ECEA0JU101	E.CAPACITOR 6.3V 100U	1	
C5		ECUM1H103KBN	C.CAPACITOR CH 50V 0.01U	1	
C6		ECEA1CU221	E.CAPACITOR 16V 220U	1	
C7-C9		ECUM1H103KBN	C.CAPACITOR CH 50V 0.01U	3	
C10		ECUM1H103KBN	C.CAPACITOR CH 50V 0.01U	1	
C11		ECEA1AU101	E.CAPACITOR 10V 100U	1	
C12,13		ECUM1H103KBN	C.CAPACITOR CH 50V 0.01U	2	
C14		ECEA1AU101	E.CAPACITOR 10V 100U	1	
C15		ECUM1H470JCN	C.CAPACITOR CH 50V 47P	1	
C16		ECUM1H103KBN	C.CAPACITOR CH 50V 0.01U	1	
C17		ECUM1H330JCN	C.CAPACITOR CH 50V 33P	1	
C18		ECUM1H103KBN	C.CAPACITOR CH 50V 0.01U	1	
C19,20		ECEA1CU221	E.CAPACITOR 16V 220U	2	
C21,22		ECUM1H103KBN	C.CAPACITOR CH 50V 0.01U	2	
C23		ECUM1H470JCN	C.CAPACITOR CH 50V 47P	1	
C24,25		ECUM1H151JCN	C.CAPACITOR CH 50V 150P	2	
C26		ECUM1E104ZFN	C.CAPACITOR CH 25V 0.1U	1	
C27		ECUM1H270JCN	C.CAPACITOR CH 50V 27P	1	
C28		ECQM1H183JF	P.CAPACITOR 50V 0.018U	1	
C29		ECUM1H103KBN	C.CAPACITOR CH 50V 0.01U	1	
C30		ECEA1EN4R7S	E.CAPACITOR 25V 4.7U	1	
C31		ECEA1HN2R2S	E.CAPACITOR 50V 2.2U	1	
C32		ECUM1H103KBN	C.CAPACITOR CH 50V 0.01U	1	
C33		ECEA0JU101	E.CAPACITOR 6.3V 100U	1	
C35		ECEA0JU221	E.CAPACITOR 6.3V 220U	1	
C36		ECUM1H103KBN	C.CAPACITOR CH 50V 0.01U	1	
C37		ECEA0JU221	E.CAPACITOR 6.3V 220U	1	
C38-46		ECUM1H103KBN	C.CAPACITOR CH 50V 0.01U	9	
C49,50		ECUM1H103KBN	C.CAPACITOR CH 50V 0.01U	2	
C51		ECEA1AU101	E.CAPACITOR 10V 100U	1	
C52		ECUM1E104ZFN	C.CAPACITOR CH 25V 0.1U	1	
C53		ECUM1H103KBN	C.CAPACITOR CH 50V 0.01U	1	
C54		ECEA1AU101	E.CAPACITOR 10V 100U	1	
C55		ECUM1H220JCN	C.CAPACITOR CH 50V 22P	1	
C56		ECUM1H103KBN	C.CAPACITOR CH 50V 0.01U	1	
C57		ECUM1H150JCN	C.CAPACITOR CH 50V 15P	1	
C58		ECUM1H103KBN	C.CAPACITOR CH 50V 0.01U	1	
C59		ECEA0JU101	E.CAPACITOR 6.3V 100U	1	
C60		ECUM1H120JCN	C.CAPACITOR CH 50V 12P	1	
C61		ECEA0JU221	E.CAPACITOR 6.3V 220U	1	
C62		ECUM1H103KBN	C.CAPACITOR CH 50V 0.01U	1	
C63		ECEA0JU221	E.CAPACITOR 6.3V 220U	1	
C64-73		ECUM1H103KBN	C.CAPACITOR CH 50V 0.01U	10	
C76		ECUM1H270JCN	C.CAPACITOR CH 50V 27P	1	
C77		ECUM1E104ZFN	C.CAPACITOR CH 25V 0.1U	1	
C78		ECQM1H223JF	P.CAPACITOR 50V 0.022U	1	
C79		ECUM1H103KBN	C.CAPACITOR CH 50V 0.01U	1	
C80,81		ECEA1HN2R2S	E.CAPACITOR 50V 2.2U	2	
C82,83		ECUM1E104ZFN	C.CAPACITOR CH 25V 0.1U	2	
C84		ECEA0JU470	E.CAPACITOR 6.3V 47U	1	
C85,86		ECUM1E104ZFN	C.CAPACITOR CH 25V 0.1U	2	
C87		ECUM1H103KBN	C.CAPACITOR CH 50V 0.01U	1	
C88		ECUM1E104ZFN	C.CAPACITOR CH 25V 0.1U	1	
C113		ECUM1E104ZFN	C.CAPACITOR CH 25V 0.1U	1	
C114-17		ECUM1H103KBN	C.CAPACITOR CH 50V 0.01U	4	
C120		ECUM1H103KBN	C.CAPACITOR CH 50V 0.01U	1	
C121		ECEA1AU470	E.CAPACITOR 10V 47U	1	
C122		ECUM1H103KBN	C.CAPACITOR CH 50V 0.01U	1	
C123		ECUM1C104KBN	C.CAPACITOR CH 16V 0.1U	1	
C124		ECUM1H181JCN	C.CAPACITOR CH 50V 180P	1	
C125		ECUM1E104ZFN	C.CAPACITOR CH 25V 0.1U	1	

Ref.No.		Part No.	Part Name & Description	Pcs	Remarks
C126		ECUM1C104KBN	C.CAPACITOR CH 16V 0.1U	1	
C127		ECUM1H180JCN	C.CAPACITOR CH 50V 18P	1	
C128		ECUM1H680JCN	C.CAPACITOR CH 50V 68P	1	
C129,30		ECUM1C104KBN	C.CAPACITOR CH 16V 0.1U	2	
C131		ECEA1HN010S	E.CAPACITOR 50V 1U	1	
C132		ECUM1H103KBN	C.CAPACITOR CH 50V 0.01U	1	
C133		ECEA1AU470	E.CAPACITOR 10V 47U	1	
C134		ECUM1E104ZFN	C.CAPACITOR CH 25V 0.1U	1	
C135		ECUM1H391JCN	C.CAPACITOR CH 50V 390P	1	
C136		ECUM1H151JCN	C.CAPACITOR CH 50V 150P	1	
C137		ECUM1H121JCN	C.CAPACITOR CH 50V 120P	1	
C138		ECUM1H391JCN	C.CAPACITOR CH 50V 390P	1	
C139-41		ECUM1H103KBN	C.CAPACITOR CH 50V 0.01U	3	
C142		ECEA1AU470	E.CAPACITOR 10V 47U	1	
C143,44		ECUM1C104KBN	C.CAPACITOR CH 16V 0.1U	2	
C145		ECUM1H121JCN	C.CAPACITOR CH 50V 120P	1	
C146		ECUM1E104ZFN	C.CAPACITOR CH 25V 0.1U	1	
C147-49		ECUM1C104KBN	C.CAPACITOR CH 16V 0.1U	3	
C150		ECEA1HN010S	E.CAPACITOR 50V 1U	1	
C151		ECUM1H103KBN	C.CAPACITOR CH 50V 0.01U	1	
C152		ECEA1AU470	E.CAPACITOR 10V 47U	1	
C154		ECUM1E104ZFN	C.CAPACITOR CH 25V 0.1U	1	
C155		ECUM1H391JCN	C.CAPACITOR CH 50V 390P	1	
C156		ECUM1H151JCN	C.CAPACITOR CH 50V 150P	1	
C157		ECUM1H121JCN	C.CAPACITOR CH 50V 120P	1	
C158		ECUM1H391JCN	C.CAPACITOR CH 50V 390P	1	
C159,60		ECUM1H821JCN	C.CAPACITOR CH 50V 820P	2	
C161,62		ECEA1AN470S	E.CAPACITOR 10V 47U	2	
C163		ECEA1CU470	E.CAPACITOR 16V 47U	1	
C164		ECQM1H104JF	P.CAPACITOR 50V 0.1U	1	
C165		ECEA1AN470S	E.CAPACITOR 10V 47U	1	
C200		ECUM1H103KBN	C.CAPACITOR CH 50V 0.01U	1	
C201		ECEA1AU101	E.CAPACITOR 10V 100U	1	
C202,03		ECUM1H103KBN	C.CAPACITOR CH 50V 0.01U	2	
C204		ECEA1AU101	E.CAPACITOR 10V 100U	1	
C205		ECUM1H103KBN	C.CAPACITOR CH 50V 0.01U	1	
C206		ECUM1H150JCN	C.CAPACITOR CH 50V 15P	1	
C207		ECUM1H470JCN	C.CAPACITOR CH 50V 47P	1	
C209		ECUM1H220JCN	C.CAPACITOR CH 50V 22P	1	
C210		ECUM1H100DCN	C.CAPACITOR CH 50V 10P	1	
C211		ECUM1C104KBN	C.CAPACITOR CH 16V 0.1U	1	
C212		ECUM1E104ZFN	C.CAPACITOR CH 25V 0.1U	1	
C213		ECUM1H221JCN	C.CAPACITOR CH 50V 220P	1	
C214		ECUM1H270JCN	C.CAPACITOR CH 50V 27P	1	
C215		ECUM1H103KBN	C.CAPACITOR CH 50V 0.01U	1	
C219		ECUM1H560JCN	C.CAPACITOR CH 50V 56P	1	
C220		ECUM1E104ZFN	C.CAPACITOR CH 25V 0.1U	1	
C223		ECUM1H221JCN	C.CAPACITOR CH 50V 220P	1	
C224		ECUM1H030DCN	C.CAPACITOR CH 50V 3P	1	
C226		ECEA1HNR47S	E.CAPACITOR 50V 0.47U	1	
C227,28		ECUM1H103KBN	C.CAPACITOR CH 50V 0.01U	2	
C229		ECEA1AU101	E.CAPACITOR 10V 100U	1	
C230,31		ECUM1H103KBN	C.CAPACITOR CH 50V 0.01U	2	
C232		ECEA1AU101	E.CAPACITOR 10V 100U	1	
C233		ECUM1H103KBN	C.CAPACITOR CH 50V 0.01U	1	
C235		ECUM1H120JCN	C.CAPACITOR CH 50V 12P	1	
C236		ECUM1H560JCN	C.CAPACITOR CH 50V 56P	1	
C238		ECUM1H100DCN	C.CAPACITOR CH 50V 10P	1	
C239		ECUM1H680JCN	C.CAPACITOR CH 50V 68P	1	
C240		ECUM1H151JCN	C.CAPACITOR CH 50V 150P	1	
C241		ECUM1H100DCN	C.CAPACITOR CH 50V 10P	1	
C242		ECEA1HNR47S	E.CAPACITOR 50V 0.47U	1	
C243		ECUM1C104KBN	C.CAPACITOR CH 16V 0.1U	1	
C244		ECUM1E104ZFN	C.CAPACITOR CH 25V 0.1U	1	
C245		ECUM1H103KBN	C.CAPACITOR CH 50V 0.01U	1	
C247		ECUM1H103KBN	C.CAPACITOR CH 50V 0.01U	1	
C248		ECEA0JU470	E.CAPACITOR 6.3V 47U	1	
C249		ECUM1H103KBN	C.CAPACITOR CH 50V 0.01U	1	
C257,58		ECUM1E104ZFN	C.CAPACITOR CH 25V 0.1U	2	
C260		ECUM1H221JCN	C.CAPACITOR CH 50V 220P	1	
C261		ECUM1H030DCN	C.CAPACITOR CH 50V 3P	1	
C263		ECUM1H103KBN	C.CAPACITOR CH 50V 0.01U	1	
C264		ECEA1HNR47S	E.CAPACITOR 50V 0.47U	1	
C266,67		ECUM1E104ZFN	C.CAPACITOR CH 25V 0.1U	2	
C268		ECUM1H103KBN	C.CAPACITOR CH 50V 0.01U	1	

Refer to the P.C.BOARDS LIST, page 6-1-1, before using this page.

Ref.No.	Part No.	Part Name & Description	Pcs	Remarks
C269	ECEA1AU101	E.CAPACITOR 10V 100U	1	
C270,71	ECUM1H103KBN	C.CAPACITOR CH 50V 0.01U	2	
C272	ECEA1AU101	E.CAPACITOR 10V 100U	1	
C273	ECUM1H103KBN	C.CAPACITOR CH 50V 0.01U	1	
C275	ECUM1H120JCN	C.CAPACITOR CH 50V 12P	1	
C276	ECUM1H560JCN	C.CAPACITOR CH 50V 56P	1	
C278	ECUM1H100DCN	C.CAPACITOR CH 50V 10P	1	
C279	ECUM1H680JCN	C.CAPACITOR CH 50V 68P	1	
C280	ECUM1H151JCN	C.CAPACITOR CH 50V 150P	1	
C281	ECUM1H100DCN	C.CAPACITOR CH 50V 10P	1	
C282	ECUM1C104KBN	C.CAPACITOR CH 16V 0.1U	1	
C283	ECUM1E104ZFN	C.CAPACITOR CH 25V 0.1U	1	
C284	ECUM1H103KBN	C.CAPACITOR CH 50V 0.01U	1	
C291	ECUM1H103KBN	C.CAPACITOR CH 50V 0.01U	1	
C292	ECEA1CU221	E.CAPACITOR 16V 220U	1	
C293	ECUM1H103KBN	C.CAPACITOR CH 50V 0.01U	1	
C294	ECEAOJU101	E.CAPACITOR 6.3V 100U	1	
C297,98	ECUM1E104ZFN	C.CAPACITOR CH 25V 0.1U	2	
C299	ECUM1H103KBN	C.CAPACITOR CH 50V 0.01U	1	
C300	ECEA1AU101	E.CAPACITOR 10V 100U	1	
C301	ECUM1H103KBN	C.CAPACITOR CH 50V 0.01U	1	
C303	ECUM1H271JCN	C.CAPACITOR CH 50V 270P	1	
C304	ECUM1H330JCN	C.CAPACITOR CH 50V 33P	1	
C305,06	ECEA1HNR47S	E.CAPACITOR 50V 0.47U	2	
C307,08	ECQM1H104JF	P.CAPACITOR 50V 0.1U	2	
C311	ECUM1H560JCN	C.CAPACITOR CH 50V 56P	1	
C312,13	ECUM1H120JCN	C.CAPACITOR CH 50V 12P	2	
C314	ECUM1H560JCN	C.CAPACITOR CH 50V 56P	1	
C501,02	ECEA1CU101	E.CAPACITOR 16V 100U	2	
C503	ECUM1H330JCN	C.CAPACITOR CH 50V 33P	1	
C504	ECUM1C104KBN	C.CAPACITOR CH 16V 0.1U	1	
C505	ECUM1H103KBN	C.CAPACITOR CH 50V 0.01U	1	
C506	ECEA1HNR47S	E.CAPACITOR 50V 0.47U	1	
C507,08	ECUM1H103KBN	C.CAPACITOR CH 50V 0.01U	2	
C510	ECUM1H103KBN	C.CAPACITOR CH 50V 0.01U	1	
C517	ECUM1H103KBN	C.CAPACITOR CH 50V 0.01U	1	
C518	ECUM1H330JCN	C.CAPACITOR CH 50V 33P	1	
C519,20	ECUM1H103KBN	C.CAPACITOR CH 50V 0.01U	2	
C521	ECEAOJU470	E.CAPACITOR 6.3V 47U	1	
C522	ECUM1H220JCN	C.CAPACITOR CH 50V 22P	1	
C523	ECUM1H181JCN	C.CAPACITOR CH 50V 180P	1	
C524	ECUM1H103KBN	C.CAPACITOR CH 50V 0.01U	1	
C525	ECEAOJU101	E.CAPACITOR 6.3V 100U	1	
C526	ECUM1H103KBN	C.CAPACITOR CH 50V 0.01U	1	
C527,28	ECEA1CU101	E.CAPACITOR 16V 100U	2	
C531	ECEA1CU101	E.CAPACITOR 16V 100U	1	
C532	ECUM1H103KBN	C.CAPACITOR CH 50V 0.01U	1	
C533	ECEA1CU101	E.CAPACITOR 16V 100U	1	
C534,35	ECUM1H103KBN	C.CAPACITOR CH 50V 0.01U	2	
C536,37	ECUM1H560JCN	C.CAPACITOR CH 50V 56P	2	
C538,39	ECUM1H103KBN	C.CAPACITOR CH 50V 0.01U	2	
C540	ECUM1E104ZFN	C.CAPACITOR CH 25V 0.1U	1	
C541	ECUM1H270JCN	C.CAPACITOR CH 50V 27P	1	
C542	ECUM1H221JCN	C.CAPACITOR CH 50V 220P	1	
C543	ECUM1H120JCN	C.CAPACITOR CH 50V 12P	1	
C546	ECUM1H101JCN	C.CAPACITOR CH 50V 100P	1	
C547	ECUM1H470JCN	C.CAPACITOR CH 50V 47P	1	
C548	ECUM1H100DCN	C.CAPACITOR CH 50V 10P	1	
C549	ECUM1H330JCN	C.CAPACITOR CH 50V 33P	1	
C550	ECUM1H103KBN	C.CAPACITOR CH 50V 0.01U	1	
C551	ECUM1H471JCN	C.CAPACITOR CH 50V 470P	1	
C552	ECUM1H270JCN	C.CAPACITOR CH 50V 27P	1	
C553	ECUM1H103KBN	C.CAPACITOR CH 50V 0.01U	1	
C554	ECUM1E104ZFN	C.CAPACITOR CH 25V 0.1U	1	
C555	ECUM1H103KBN	C.CAPACITOR CH 50V 0.01U	1	
C559	ECEAOJU470	E.CAPACITOR 6.3V 47U	1	
C560	ECUM1H103KBN	C.CAPACITOR CH 50V 0.01U	1	
C561	ECEAOJN330S	E.CAPACITOR 6.3V 33U	1	
C562	ECUM1H680JCN	C.CAPACITOR CH 50V 68P	1	
C563	ECUM1H271JCN	C.CAPACITOR CH 50V 270P	1	
C564	ECUM1H151JCN	C.CAPACITOR CH 50V 150P	1	
C565	ECUM1H471JCN	C.CAPACITOR CH 50V 470P	1	
C566	ECEA1CU470	E.CAPACITOR 16V 47U	1	
C567-69	ECUM1H103KBN	C.CAPACITOR CH 50V 0.01U	3	
C570	ECEA1CU470	E.CAPACITOR 16V 47U	1	
C571	ECUM1H103KBN	C.CAPACITOR CH 50V 0.01U	1	
C572	ECUM1E104ZFN	C.CAPACITOR CH 25V 0.1U	1	
C573	ECUM1H103KBN	C.CAPACITOR CH 50V 0.01U	1	
C574,75	ECUM1H220JCN	C.CAPACITOR CH 50V 22P	2	
C576,77	ECUM1H103KBN	C.CAPACITOR CH 50V 0.01U	2	
C578	ECEAOJU101	E.CAPACITOR 6.3V 100U	1	
C579	ECUM1E104ZFN	C.CAPACITOR CH 25V 0.1U	1	
C580,81	ECUM1H220JCN	C.CAPACITOR CH 50V 22P	2	
C582	ECEAOJU101	E.CAPACITOR 6.3V 100U	1	
C583	ECUM1E104ZFN	C.CAPACITOR CH 25V 0.1U	1	
C584	ECUM1H103KBN	C.CAPACITOR CH 50V 0.01U	1	
C585	ECUM1H820JCN	C.CAPACITOR CH 50V 82P	1	
C586	ECUM1H100DCN	C.CAPACITOR CH 50V 10P	1	
C587,88	ECUM1H103KBN	C.CAPACITOR CH 50V 0.01U	2	
C589	ECUM1H271JCN	C.CAPACITOR CH 50V 270P	1	
C590	ECUM1H221JCN	C.CAPACITOR CH 50V 220P	1	
C591	ECUM1H820JCN	C.CAPACITOR CH 50V 82P	1	
C592-97	ECUM1H103KBN	C.CAPACITOR CH 50V 0.01U	6	
C598	ECEA1CU101	E.CAPACITOR 16V 100U	1	
C599,00	ECUM1H103KBN	C.CAPACITOR CH 50V 0.01U	2	
C601	ECEA1CU101	E.CAPACITOR 16V 100U	1	
C602	ECUM1H103KBN	C.CAPACITOR CH 50V 0.01U	1	
C603	ECEA1AU101	E.CAPACITOR 10V 100U	1	
C604	ECUM1H103KBN	C.CAPACITOR CH 50V 0.01U	1	
C605	ECEA1AU101	E.CAPACITOR 10V 100U	1	
C606	ECUM1H103KBN	C.CAPACITOR CH 50V 0.01U	1	
C607	ECEAOJU101	E.CAPACITOR 6.3V 100U	1	
C608	ECUM1H103KBN	C.CAPACITOR CH 50V 0.01U	1	
C609	ECEAOJU101	E.CAPACITOR 6.3V 100U	1	
C610	ECUM1H103KBN	C.CAPACITOR CH 50V 0.01U	1	
C611	ECUM1E104ZFN	C.CAPACITOR CH 25V 0.1U	1	
C612	ECUM1H103KBN	C.CAPACITOR CH 50V 0.01U	1	
C615-18	ECUM1H103KBN	C.CAPACITOR CH 50V 0.01U	4	
C619	ECUM1H221JCN	C.CAPACITOR CH 50V 220P	1	
C620	ECQM1H104JF	P.CAPACITOR 50V 0.1U	1	
C621	ECEA1CU100	E.CAPACITOR 16V 10U	1	
C622	ECQM1H104JF	P.CAPACITOR 50V 0.1U	1	
C623	ECEA1CU470	E.CAPACITOR 16V 47U	1	
C624	ECQM1H104JF	P.CAPACITOR 50V 0.1U	1	
C625	ECEA1CU470	E.CAPACITOR 16V 47U	1	
C626	ECQM1H104JF	P.CAPACITOR 50V 0.1U	1	
C627,28	ECUM1H122JN	C.CAPACITOR CH 50V 1200P	2	
C629	ECUM1H221JCN	C.CAPACITOR CH 50V 220P	1	
C630,31	ECUM1H122JN	C.CAPACITOR CH 50V 1200P	2	
C632	ECUM1H103KBN	C.CAPACITOR CH 50V 0.01U	1	
C634	ECUM1H270JCN	C.CAPACITOR CH 50V 27P	1	
C635	ECCF1H120JC	C.CAPACITOR 50V 12P	1	
C800	ECUM1H122JN	C.CAPACITOR CH 50V 1200P	1	
C801	ECUM1H151JCN	C.CAPACITOR CH 50V 150P	1	
C802	ECQM1H122JF	P.CAPACITOR 50V 1200P	1	
C803	ECQV1H684JZ	P.CAPACITOR 50V 0.68U	1	
C804-06	ECUM1H151JCN	C.CAPACITOR CH 50V 150P	3	
C808	ECUM1H151JCN	C.CAPACITOR CH 50V 150P	1	
C809,10	ECUM1H122JN	C.CAPACITOR CH 50V 1200P	2	
C812	ECUM1H103KBN	C.CAPACITOR CH 50V 0.01U	1	
C813	ECUM1H101JCN	C.CAPACITOR CH 50V 100P	1	
C814-22	ECUM1H122JN	C.CAPACITOR CH 50V 1200P	9	
C823-25	ECUM1E104ZFN	C.CAPACITOR CH 25V 0.1U	3	
C827	ECEAOJU101	E.CAPACITOR 6.3V 100U	1	
C828,29	ECUM1H101JCN	C.CAPACITOR CH 50V 100P	2	
C830	ECUM1H820JCN	C.CAPACITOR CH 50V 82P	1	
C831	ECUM1H103KBN	C.CAPACITOR CH 50V 0.01U	1	
C832	ECUM1E104ZFN	C.CAPACITOR CH 25V 0.1U	1	
C834	ECEA1CN100S	E.CAPACITOR 16V 10U	1	
C835	ECEA1EN4R7S	E.CAPACITOR 25V 4.7U	1	
C836	ECEAOJN330S	E.CAPACITOR 6.3V 33U	1	
C837	ECEA1EN4R7S	E.CAPACITOR 25V 4.7U	1	
C838	ECUM1E104ZFN	C.CAPACITOR CH 25V 0.1U	1	
C841	ECUM1H103KBN	C.CAPACITOR CH 50V 0.01U	1	
C842	ECEAOJU101	E.CAPACITOR 6.3V 100U	1	
C843,44	ECUM1H103KBN	C.CAPACITOR CH 50V 0.01U	2	
C845	ECEAOJU101	E.CAPACITOR 6.3V 100U	1	
C846,47	ECUM1H103KBN	C.CAPACITOR CH 50V 0.01U	2	
C848	ECEAOJU101	E.CAPACITOR 6.3V 100U	1	
C849	ECUM1H103KBN	C.CAPACITOR CH 50V 0.01U	1	

Refer to the P.C.BOARDS LIST, page 6-1-1, before using this page.

Ref.No.		Part No.	Part Name & Description	Pcs	Remarks
C850		ECEAOJU101	E.CAPACITOR 6.3V 100U	1	
C851		ECUM1H820JCN	C.CAPACITOR CH 50V 82P	1	
C852		ECUM1H103KBN	C.CAPACITOR CH 50V 0.01U	1	
C853		ECUM1H122JN	C.CAPACITOR CH 50V 1200P	1	
C854		ECQB1H272JF	P.CAPACITOR 50V 2700P	1	
C855,56		ECCF1H331J	C.CAPACITOR 50V 330P	2	
C1001		ECEA1HU010	E.CAPACITOR 50V 1U	1	
C1003,04		ECEA1CN100S	E.CAPACITOR 16V 10U	2	
C1005		ECUM1H221JCN	C.CAPACITOR CH 50V 220P	1	
C1006		ECUM1H470JCN	C.CAPACITOR CH 50V 47P	1	
D1		1S251	DIODE	1	
D2		MA153	DIODE	1	
D4		MA153	DIODE	1	
D8		MA151WK	DIODE	1	
D11		MA151WK	DIODE	1	
D200,01		RD4.7EB2	ZENER 4.7V	2	
D203,04		MA151K	DIODE	2	
D210		MA151K	DIODE	1	
D501		RD3.6EB	ZENER 3.6V	1	
D508		RD4.7EB2	ZENER 4.7V	1	
D509		MA151K	DIODE	1	
D510,11		MA335-R	DIODE	2	
D512		MA153	DIODE	1	
D514		MA151K	DIODE	1	
D800		MA704	DIODE	1	
D801		MA153	DIODE	1	
D802		MA151K	DIODE	1	
FL1		VLF0650	FILTER	1	
FL3		VLF0754	FILTER	1	
FL200		VLF0712	FILTER	1	
FL201,02		VLF0753	FILTER	2	
IC1		AN78N09	IC	1	FOR VEP88063C
IC1		MC10107L	IC	1	FOR VEP80632A
IC2		AN79N09	IC	1	
IC3		MC74HC4053F	IC	1	
IC4-C6		TL082CPS	IC	3	
IC7		HA19211BNT	IC	1	
IC8		MC74HC574F	IC	1	
IC9		TL082CPS	IC	1	
IC10-12		TL082CPS	IC	3	
IC13		HA19211BNT	IC	1	
IC14		MC74HC574F	IC	1	
IC15		AN78N09	IC	1	
IC16		AN79N09	IC	1	
IC17		AN79L05	IC	1	
IC18,19		AN78N05	IC	2	
IC26,27		AN91A12S	IC	2	
IC28		MC74HC08AF	IC	1	
IC29		SN74LS123NS	IC	1	
IC30		NE521D	IC	1	
IC32		AN78N05	IC	1	
IC33		AN79N05	IC	1	
IC200		AN78N09	IC	1	
IC201		AN79N09	IC	1	
IC202		AN78N09	IC	1	
IC203		AN79N09	IC	1	
IC204		AN78N09	IC	1	
IC205		AN79N09	IC	1	
IC206		TL082CPS	IC	1	
IC207		CA3054	IC	1	
IC208-10		TL082CPS	IC	3	
IC211		AN78L05	IC	1	
IC215		TL082CPS	IC	1	
IC216		AN79L09	IC	1	
IC501		TL082CPS	IC	1	
IC502,03		CA3054	IC	2	

Ref.No.		Part No.	Part Name & Description	Pcs	Remarks
IC504,05		NJM1496M	IC	2	
IC506		10116D	IC	1	
IC507		MC74HC04AF	IC	1	
IC508		NJM1496M	IC	1	
IC509		MC74HC00AF	IC	1	
IC510		MC74HC74AF	IC	1	
IC511		SN74LS123NS	IC	1	
IC512		10116D	IC	1	
IC513		MC74HC00AF	IC	1	
IC514		MC74HC74AF	IC	1	
IC517		AN78N09	IC	1	
IC518		AN79N09	IC	1	
IC519		AN78N05	IC	1	
IC520		AN79N05	IC	1	
IC521		AN78N09	IC	1	
IC522		AN79N09	IC	1	
IC523		MC74HC04AF	IC	1	
IC800		NE521D	IC	1	
IC801		MC74HC126AF	IC	1	
IC802,03		MC10125L	IC	2	
IC804		MN53010VYD	IC	1	
IC805		UPC311G	IC	1	
IC806		MC74HC126AF	IC	1	
IC807-14		TL082CPS	IC	8	
IC815-17		MC74HC4053F	IC	3	
IC818		AN78N09	IC	1	
IC819		AN79N09	IC	1	
IC820		AN78N05	IC	1	
IC821		AN79N05	IC	1	
L1-L3		VLP0017	COIL	3	
L5		VLQEL05S821J	COIL 820UH	1	
L6-L9		VLP0017	COIL	4	
L10		VLQEL05S221J	COIL 220UH	1	
L12		VLQEL05S5R6J	COIL 5.6UH	1	
L13		VLQEL05S390J	COIL 39UH	1	
L14		VLQEL05S100J	COIL 10UH	1	
L15		VLQEL05S5R6J	COIL 5.6UH	1	
L17		VLQEL05S5R6J	COIL 5.6UH	1	
L18		VLQEL05S390J	COIL 39UH	1	
L19		VLQEL05S100J	COIL 10UH	1	
L20		VLQEL05S5R6J	COIL 5.6UH	1	
L200		VLQEL05S6R8J	COIL 6.8UH	1	
L201		ERDS2T0	C.RESISTOR 1/4W 0	1	
L203		ERDS2T0	C.RESISTOR 1/4W 0	1	
L205,06		VLP0017	COIL	2	
L208,09		VLQEL05S6R8J	COIL 6.8UH	2	
L210		VLQEL05S101J	COIL 100UH	1	
L211,12		VLQEL05S6R8J	COIL 6.8UH	2	
L501,02		VLQEL05F101K	COIL 100UH	2	
L503		VLQEL05S6R8J	COIL 6.8UH	1	
L505		VLQEL05F101K	COIL 100UH	1	
L506		VLQEL05S680J	COIL 68UH	1	
L507,08		VLQEL05F101K	COIL 100UH	2	
L511		VLQEL05S150J	COIL 15UH	1	
L512		VLQEL05S5R6J	COIL 5.6UH	1	
L513		VLQEL05S6R8J	COIL 6.8UH	1	
L514		VLQEL05S180J	COIL 18UH	1	
L515		VLQEL05S560J	COIL 56UH	1	
L518,19		VLQEL05F101K	COIL 100UH	2	
L520,21		VLQEL05S470J	COIL 47UH	2	
L522,23		VLP0017	COIL	2	
L800		VLQEL06F8R2J	COIL 8.2UH	1	
L801		VLQEL05S8R2J	COIL 8.2UH	1	
Q1		2SD601	TRANSISTOR CHIP	1	(Q,R)
Q2		2SB709	TRANSISTOR CHIP	1	(Q,R)
Q3		2SD601	TRANSISTOR CHIP	1	(Q,R)
Q4		2SB709	TRANSISTOR CHIP	1	(Q,R)
Q5		2SB709	TRANSISTOR CHIP	1	(Q,R)
Q6,Q7		2SC2404	TRANSISTOR CHIP	2	(C,D)

Refer to the P.C.BOARDS LIST, page 6-1-1, before using this page.

Ref.No.		Part No.	Part Name & Description	Pcs	Remarks
Q8		2SA1022-C	TRANSISTOR CHIP	1	(B,C)
Q9		2SC2295	TRANSISTOR CHIP	1	(B,C)
Q10		2SA1022-C	TRANSISTOR CHIP	1	(B,C)
Q11		2SK374	TRANSISTOR	1	
Q12		2SB709	TRANSISTOR CHIP	1	(Q,R)
Q13		2SD601	TRANSISTOR CHIP	1	(Q,R)
Q14		2SB709	TRANSISTOR CHIP	1	(Q,R)
Q15		2SD601	TRANSISTOR CHIP	1	(Q,R)
Q16		2SB709	TRANSISTOR CHIP	1	(Q,R)
Q17,18		2SC2404	TRANSISTOR CHIP	2	(C,D)
Q19		2SA1022-C	TRANSISTOR CHIP	1	(B,C)
Q20		2SC2295	TRANSISTOR CHIP	1	(B,C)
Q21		2SA1022-C	TRANSISTOR CHIP	1	(B,C)
Q22		2SK374	TRANSISTOR	1	
Q23		2SB709	TRANSISTOR CHIP	1	(Q,R)
Q24		2SD601	TRANSISTOR CHIP	1	(Q,R)
Q25		2SA1022-C	TRANSISTOR CHIP	1	(B,C)
Q26-28		2SD601	TRANSISTOR CHIP	3	(Q,R)
Q200		2SD601	TRANSISTOR CHIP	1	(Q,R)
Q201,02		2SB709	TRANSISTOR CHIP	2	(Q,R)
Q203,04		2SD601	TRANSISTOR CHIP	2	(Q,R)
Q205,06		2SC2404	TRANSISTOR CHIP	2	(C,D)
Q207		2SA1022-C	TRANSISTOR CHIP	1	(B,C)
Q208		2SC2295	TRANSISTOR CHIP	1	(B,C)
Q209		2SD601	TRANSISTOR CHIP	1	(Q,R)
Q210		2SK198	TRANSISTOR	1	(Q,R)
Q211-15		2SD601	TRANSISTOR CHIP	5	(Q,R)
Q219		2SD601	TRANSISTOR CHIP	1	(Q,R)
Q220,21		2SB709	TRANSISTOR CHIP	2	(Q,R)
Q222		2SD601	TRANSISTOR CHIP	1	(Q,R)
Q223,24		2SC2404	TRANSISTOR CHIP	2	(C,D)
Q225		2SA1022-C	TRANSISTOR CHIP	1	(B,C)
Q226		2SC2295	TRANSISTOR CHIP	1	(B,C)
Q227		2SD601	TRANSISTOR CHIP	1	(Q,R)
Q229		2SB709	TRANSISTOR CHIP	1	(Q,R)
Q230		2SD601	TRANSISTOR CHIP	1	(Q,R)
Q232,33		2SB709	TRANSISTOR CHIP	2	(Q,R)
Q234		2SD601	TRANSISTOR CHIP	1	(Q,R)
Q235,36		2SC2404	TRANSISTOR CHIP	2	(C,D)
Q237		2SK198	TRANSISTOR	1	(Q,R)
Q238,39		2SB709	TRANSISTOR CHIP	2	(Q,R)
Q240		2SD601	TRANSISTOR CHIP	1	(Q,R)
Q241,42		2SC2404	TRANSISTOR CHIP	2	(C,D)
Q243		2SA1022-C	TRANSISTOR CHIP	1	(B,C)
Q244		2SC2295	TRANSISTOR CHIP	1	(B,C)
Q245		2SD601	TRANSISTOR CHIP	1	(Q,R)
Q246		2SK198	TRANSISTOR	1	(Q,R)
Q247		2SB709	TRANSISTOR CHIP	1	(Q,R)
Q248,49		2SD601	TRANSISTOR CHIP	2	(Q,R)
Q250,51		2SB709	TRANSISTOR CHIP	2	(Q,R)
Q252		2SD601	TRANSISTOR CHIP	1	(Q,R)
Q253,54		2SC2404	TRANSISTOR CHIP	2	(C,D)
Q255		2SK198	TRANSISTOR	1	(Q,R)
Q256		2SC2404	TRANSISTOR CHIP	1	(C,D)
Q257		2SB709	TRANSISTOR CHIP	1	(Q,R)
Q258		2SA1022-C	TRANSISTOR CHIP	1	(B,C)
Q259-63		2SC2295	TRANSISTOR CHIP	5	(B,C)
Q265		2SC2295	TRANSISTOR CHIP	1	(B,C)
Q266,67		2SD601	TRANSISTOR CHIP	2	(Q,R)
Q284		2SK198	TRANSISTOR	1	(Q,R)
Q285		2SC2295	TRANSISTOR CHIP	1	(B,C)
Q286,87		2SD601	TRANSISTOR CHIP	2	(Q,R)
Q288,89		2SB709	TRANSISTOR CHIP	2	(Q,R)
Q290		2SD601	TRANSISTOR CHIP	1	(Q,R)
Q291,92		2SB709	TRANSISTOR CHIP	2	(Q,R)
Q501,02		2SC2295	TRANSISTOR CHIP	2	(B,C)
Q503,04		2SD601	TRANSISTOR CHIP	2	(Q,R)
Q505		2SK198	TRANSISTOR	1	(Q,R)
Q506		2SB709	TRANSISTOR CHIP	1	(Q,R)
Q507-09		2SD601	TRANSISTOR CHIP	3	(Q,R)
Q514-16		2SD601	TRANSISTOR CHIP	3	(Q,R)
Q518		2SD601	TRANSISTOR CHIP	1	(Q,R)
Q519		2SC2295	TRANSISTOR CHIP	1	(B,C)
Q520		2SD601	TRANSISTOR CHIP	1	(Q,R)
Q521,22		2SC2295	TRANSISTOR CHIP	2	(B,C)

Ref.No.		Part No.	Part Name & Description	Pcs	Remarks
Q523		2SD601	TRANSISTOR CHIP	1	(Q,R)
Q524,25		2SB709	TRANSISTOR CHIP	2	(Q,R)
Q526,27		2SC2295	TRANSISTOR CHIP	2	(B,C)
Q528		2SD601	TRANSISTOR CHIP	1	(Q,R)
Q532		2SB709	TRANSISTOR CHIP	1	(Q,R)
Q533-37		2SD601	TRANSISTOR CHIP	5	(Q,R)
Q538		2SB709	TRANSISTOR CHIP	1	(Q,R)
Q539		2SD601	TRANSISTOR CHIP	1	(Q,R)
Q540		2SB709	TRANSISTOR CHIP	1	(Q,R)
Q541		2SD601	TRANSISTOR CHIP	1	(Q,R)
Q542		2SB709	TRANSISTOR CHIP	1	(Q,R)
Q543		2SD601	TRANSISTOR CHIP	1	(Q,R)
Q544		2SB709	TRANSISTOR CHIP	1	(Q,R)
Q545-52		2SD601	TRANSISTOR CHIP	8	(Q,R)
Q800		2SC2295	TRANSISTOR CHIP	1	(B,C)
Q801		2SD601	TRANSISTOR CHIP	1	(Q,R)
Q802		2SB709	TRANSISTOR CHIP	1	(Q,R)
Q803		2SC2295	TRANSISTOR CHIP	1	(B,C)
Q804		2SB709	TRANSISTOR CHIP	1	(Q,R)
Q805		2SC2295	TRANSISTOR CHIP	1	(B,C)
Q807		2SD601	TRANSISTOR CHIP	1	(Q,R)
Q808-15		2SC2295	TRANSISTOR CHIP	8	(B,C)
Q816,17		2SB709	TRANSISTOR CHIP	2	(Q,R)
Q818,19		2SC2295	TRANSISTOR CHIP	2	(B,C)
Q826		ECUM1E104ZFN	C.CAPACITOR CH 25V 0.1U	1	
Q833		ECUM1E104ZFN	C.CAPACITOR CH 25V 0.1U	1	
			RESISTORS		
R1		ERJ6GEYG222	M.RESISTOR CH 1/10W 2.2K	1	
R2,R3		ERJ6GEYG220	M.RESISTOR CH 1/10W 22	2	
R4,R5		ERJ6GEYG152	M.RESISTOR CH 1/10W 1.5K	2	
R6,R7		VREO034E561	M.RESISTOR CH 1/10W 560	2	
R8		ERJ6GEYG150	M.RESISTOR CH 1/10W 15	1	
R9		ERJ6GEYG473	M.RESISTOR CH 1/10W 47K	1	
R10		VREO034E301	M.RESISTOR CH 1/10W 300	1	
R11		ERJ6GEYG220	M.RESISTOR CH 1/10W 22	1	
R12		ERJ6GEYG122	M.RESISTOR CH 1/10W 1.2K	1	
R13		ERJ6GEYG121	M.RESISTOR CH 1/10W 120	1	
R14		ERJ6GEYG680	M.RESISTOR CH 1/10W 68	1	
R15		ERJ6GEYG221	M.RESISTOR CH 1/10W 220	1	
R16		ERJ6GEYG683	M.RESISTOR CH 1/10W 68K	1	
R17		ERJ6GEYG332	M.RESISTOR CH 1/10W 3.3K	1	
R18		ERJ6GEYG151	M.RESISTOR CH 1/10W 150	1	
R19		ERJ6GEYG101	M.RESISTOR CH 1/10W 100	1	
R20		ERJ6GEYG472	M.RESISTOR CH 1/10W 4.7K	1	
R21		ERJ6GEYG183	M.RESISTOR CH 1/10W 18K	1	
R22		ERJ6GEYG821	M.RESISTOR CH 1/10W 820	1	
R23,24		ERJ6GEYG102	M.RESISTOR CH 1/10W 1K	2	
R25,26		ERJ6GEYG101	M.RESISTOR CH 1/10W 100	2	
R27		ERJ6GEYG122	M.RESISTOR CH 1/10W 1.2K	1	
R28		ERJ6GEYG471	M.RESISTOR CH 1/10W 470	1	
R29		ERJ6GEYG222	M.RESISTOR CH 1/10W 2.2K	1	
R30		ERJ6GEYG272	M.RESISTOR CH 1/10W 2.7K	1	
R31		VREO034E333	M.RESISTOR CH 1/10W 33K	1	
R32		VREO034E103	M.RESISTOR CH 1/10W 10K	1	
R33		ERJ6GEYG222	M.RESISTOR CH 1/10W 2.2K	1	
R34		ERJ6GEYG223	M.RESISTOR CH 1/10W 22K	1	
R35		ERJ6GEYG562	M.RESISTOR CH 1/10W 5.6K	1	
R36,37		ERJ6GEYG332	M.RESISTOR CH 1/10W 3.3K	2	
R38		ERJ6GEYG823	M.RESISTOR CH 1/10W 82K	1	
R39		ERJ6GEYG332	M.RESISTOR CH 1/10W 3.3K	1	
R40		ERJ6GEYG222	M.RESISTOR CH 1/10W 2.2K	1	
R41		ERJ6GEYG563	M.RESISTOR CH 1/10W 56K	1	
R42		ERJ6GEYG333	M.RESISTOR CH 1/10W 33K	1	
R43		ERJ6GEYG332	M.RESISTOR CH 1/10W 3.3K	1	
R44		ERJ6GEYG272	M.RESISTOR CH 1/10W 2.7K	1	
R45		ERJ6GEYG273	M.RESISTOR CH 1/10W 27K	1	
R46		ERJ6GEYG224	M.RESISTOR CH 1/10W 220K	1	
R47		ERJ6GEYG472	M.RESISTOR CH 1/10W 4.7K	1	
R48		ERJ6GEYG272	M.RESISTOR CH 1/10W 2.7K	1	
R49		ERJ6GEYG221	M.RESISTOR CH 1/10W 220	1	
R50		ERJ6GEYG391	M.RESISTOR CH 1/10W 390	1	
R51		VREO034E273	M.RESISTOR CH 1/10W 27K	1	

Refer to the P.C.BOARDS LIST, page 6-1-1, before using this page.

Ref.No.		Part No.	Part Name & Description	Pcs	Remarks
R52		VRE0034E203	M.RESISTOR CH 1/10W 20K	1	
R53		VRE0034E153	M.RESISTOR CH 1/10W 15K	1	
R54		ERJ6GEYG220	M.RESISTOR CH 1/10W 22	1	
R55		ERJ6GEYG222	M.RESISTOR CH 1/10W 2.2K	1	
R56		ERJ6GEYG332	M.RESISTOR CH 1/10W 3.3K	1	
R57		ERJ6GEYG222	M.RESISTOR CH 1/10W 2.2K	1	
R58,59		ERJ6GEYG220	M.RESISTOR CH 1/10W 22	2	
R60,61		ERJ6GEYG152	M.RESISTOR CH 1/10W 1.5K	2	
R62,63		VRE0034E561	M.RESISTOR CH 1/10W 560	2	
R64		ERJ6GEYG150	M.RESISTOR CH 1/10W 15	1	
R65		VRE0034E301	M.RESISTOR CH 1/10W 300	1	
R66		ERJ6GEYG220	M.RESISTOR CH 1/10W 22	1	
R67		ERJ6GEYG222	M.RESISTOR CH 1/10W 2.2K	1	
R68		ERJ6GEYG102	M.RESISTOR CH 1/10W 1K	1	
R69		ERJ6GEYG471	M.RESISTOR CH 1/10W 470	1	
R70		ERJ6GEYG122	M.RESISTOR CH 1/10W 1.2K	1	
R71		ERJ6GEYG101	M.RESISTOR CH 1/10W 100	1	
R72		ERJ6GEYG472	M.RESISTOR CH 1/10W 4.7K	1	
R73		ERJ6GEYG183	M.RESISTOR CH 1/10W 18K	1	
R74		ERJ6GEYG102	M.RESISTOR CH 1/10W 1K	1	
R75		ERJ6GEYG101	M.RESISTOR CH 1/10W 100	1	
R76		ERJ6GEYG102	M.RESISTOR CH 1/10W 1K	1	
R77		ERJ6GEYG101	M.RESISTOR CH 1/10W 100	1	
R78		ERJ6GEYG122	M.RESISTOR CH 1/10W 1.2K	1	
R79		ERJ6GEYG471	M.RESISTOR CH 1/10W 470	1	
R80		ERJ6GEYG222	M.RESISTOR CH 1/10W 2.2K	1	
R81		ERJ6GEYG272	M.RESISTOR CH 1/10W 2.7K	1	
R82		ERJ6GEYG223	M.RESISTOR CH 1/10W 22K	1	
R83		ERJ6GEYG222	M.RESISTOR CH 1/10W 2.2K	1	
R84		ERJ6GEYG220	M.RESISTOR CH 1/10W 22	1	
R85		ERJ6GEYG562	M.RESISTOR CH 1/10W 5.6K	1	
R86,87		ERJ6GEYG332	M.RESISTOR CH 1/10W 3.3K	2	
R88		ERJ6GEYG823	M.RESISTOR CH 1/10W 82K	1	
R89		ERJ6GEYG332	M.RESISTOR CH 1/10W 3.3K	1	
R90		ERJ6GEYG222	M.RESISTOR CH 1/10W 2.2K	1	
R91		ERJ6GEYG563	M.RESISTOR CH 1/10W 56K	1	
R92		ERJ6GEYG333	M.RESISTOR CH 1/10W 33K	1	
R93		ERJ6GEYG332	M.RESISTOR CH 1/10W 3.3K	1	
R94		ERJ6GEYG273	M.RESISTOR CH 1/10W 27K	1	
R95		ERJ6GEYG272	M.RESISTOR CH 1/10W 2.7K	1	
R96		ERJ6GEYG472	M.RESISTOR CH 1/10W 4.7K	1	
R97		ERJ6GEYG224	M.RESISTOR CH 1/10W 220K	1	
R98		ERJ6GEYG272	M.RESISTOR CH 1/10W 2.7K	1	
R99		ERJ6GEYG221	M.RESISTOR CH 1/10W 220	1	
R100		ERJ6GEYG222	M.RESISTOR CH 1/10W 2.2K	1	
R101		ERJ6GEYG332	M.RESISTOR CH 1/10W 3.3K	1	
R102		ERJ6GEYG272	M.RESISTOR CH 1/10W 2.7K	1	
R103		VRE0034E223	M.RESISTOR CH 1/10W 22K	1	
R104		VRE0034E153	M.RESISTOR CH 1/10W 15K	1	
R105		ERJ6GEYG272	M.RESISTOR CH 1/10W 2.7K	1	
R109,10		ERJ6GEY0R00	M.RESISTOR CH 1/10W 0	2	
R133		ERJ6GEYG224	M.RESISTOR CH 1/10W 220K	1	
R135,36		ERJ6GEYG822	M.RESISTOR CH 1/10W 8.2K	2	
R137		ERJ6GEYG222	M.RESISTOR CH 1/10W 2.2K	1	
R138		ERJ6GEYG102	M.RESISTOR CH 1/10W 1K	1	
R139		ERJ6GEYG222	M.RESISTOR CH 1/10W 2.2K	1	
R140		ERJ6GEYG104	M.RESISTOR CH 1/10W 100K	1	
R141		ERJ6GEYG470	M.RESISTOR CH 1/10W 47	1	
R142		ERJ6GEYG681	M.RESISTOR CH 1/10W 680	1	
R143,44		ERJ6GEYG301	M.RESISTOR CH 1/10W 300	2	
R145		ERJ6GEYG153	M.RESISTOR CH 1/10W 15K	1	
R146		ERJ6GEYG105	M.RESISTOR CH 1/10W 1M	1	
R148,49		ERJ6GEYG103	M.RESISTOR CH 1/10W 10K	2	
R150		ERJ6GEYG104	M.RESISTOR CH 1/10W 100K	1	
R151		ERJ6GEYG102	M.RESISTOR CH 1/10W 1K	1	
R152		ERJ6GEYG222	M.RESISTOR CH 1/10W 2.2K	1	
R153		ERJ6GEYG333	M.RESISTOR CH 1/10W 33K	1	
R154		ERJ6GEYG104	M.RESISTOR CH 1/10W 100K	1	
R155		ERJ6GEYG332	M.RESISTOR CH 1/10W 3.3K	1	
R156		ERJ6GEYG472	M.RESISTOR CH 1/10W 4.7K	1	
R157		ERJ6GEYG103	M.RESISTOR CH 1/10W 10K	1	
R158		ERJ6GEYG221	M.RESISTOR CH 1/10W 220	1	
R159		ERJ6GEYG681	M.RESISTOR CH 1/10W 680	1	
R160,61		ERJ6GEYG301	M.RESISTOR CH 1/10W 300	2	
R162,63		ERJ6GEYG103	M.RESISTOR CH 1/10W 10K	2	

Ref.No.		Part No.	Part Name & Description	Pcs	Remarks
R164,65		ERJ6GEY0R00	M.RESISTOR CH 1/10W 0	2	
R166,67		ERJ6GEYG102	M.RESISTOR CH 1/10W 1K	2	
R168		ERJ6GEYG470	M.RESISTOR CH 1/10W 47	1	
R169,70		ERJ6GEYG272	M.RESISTOR CH 1/10W 2.7K	2	
R171		ERJ6GEYG102	M.RESISTOR CH 1/10W 1K	1	
R172		ERJ6GEYG272	M.RESISTOR CH 1/10W 2.7K	1	
R173		ERJ6GEYG470	M.RESISTOR CH 1/10W 47	1	
R174		ERJ6GEY0R00	M.RESISTOR CH 1/10W 0	1	
R176		ERDS2TJ101	C.RESISTOR 1/4W 100	1	
R200		ERJ6GEYG272	M.RESISTOR CH 1/10W 2.7K	1	
R201		ERJ6GEYG222	M.RESISTOR CH 1/10W 2.2K	1	
R202,03		VRE0034E331	M.RESISTOR CH 1/10W 330	2	
R204		ERJ6GEYG470	M.RESISTOR CH 1/10W 47	1	
R205		ERJ6GEYG272	M.RESISTOR CH 1/10W 2.7K	1	
R206,07		VRE0034E102	M.RESISTOR CH 1/10W 1K	2	
R209		VRE0034E621	M.RESISTOR CH 1/10W 620	1	
R210,11		ERJ6GEYG272	M.RESISTOR CH 1/10W 2.7K	2	
R212		ERJ6GEYG102	M.RESISTOR CH 1/10W 1K	1	
R213		ERJ6GEYG221	M.RESISTOR CH 1/10W 220	1	
R214		ERJ6GEYG681	M.RESISTOR CH 1/10W 680	1	
R215		ERJ6GEYG101	M.RESISTOR CH 1/10W 100	1	
R216		ERJ6GEYG102	M.RESISTOR CH 1/10W 1K	1	
R217		ERJ6GEYG101	M.RESISTOR CH 1/10W 100	1	
R218		ERJ6GEYG102	M.RESISTOR CH 1/10W 1K	1	
R219		ERJ6GEYG152	M.RESISTOR CH 1/10W 1.5K	1	
R220		ERJ6GEYG222	M.RESISTOR CH 1/10W 2.2K	1	
R221		ERJ6GEYG471	M.RESISTOR CH 1/10W 470	1	
R222,23		ERJ6GEYG222	M.RESISTOR CH 1/10W 2.2K	2	
R224		ERJ6GEYG101	M.RESISTOR CH 1/10W 100	1	
R225		ERJ6GEYG683	M.RESISTOR CH 1/10W 68K	1	
R226		ERJ6GEYG272	M.RESISTOR CH 1/10W 2.7K	1	
R227		ERJ6GEYG222	M.RESISTOR CH 1/10W 2.2K	1	
R228		ERJ6GEYG103	M.RESISTOR CH 1/10W 10K	1	
R229		ERJ6GEYG102	M.RESISTOR CH 1/10W 1K	1	
R230		ERJ6GEYG222	M.RESISTOR CH 1/10W 2.2K	1	
R231		ERJ6GEYG470	M.RESISTOR CH 1/10W 47	1	
R233		ERJ6GEYG102	M.RESISTOR CH 1/10W 1K	1	
R234		ERJ6GEYG681	M.RESISTOR CH 1/10W 680	1	
R235		ERJ6GEYG561	M.RESISTOR CH 1/10W 560	1	
R236		ERJ6GEYG121	M.RESISTOR CH 1/10W 120	1	
R237		ERJ6GEYG391	M.RESISTOR CH 1/10W 390	1	
R238		ERJ6GEYG473	M.RESISTOR CH 1/10W 47K	1	
R240		ERJ6GEYG182	M.RESISTOR CH 1/10W 1.8K	1	
R241		ERJ6GEYG273	M.RESISTOR CH 1/10W 27K	1	
R242		ERJ6GEYG470	M.RESISTOR CH 1/10W 47	1	
R243		ERJ6GEYG182	M.RESISTOR CH 1/10W 1.8K	1	
R244		VRE0034E151	M.RESISTOR CH 1/10W 150	1	
R245		ERJ6GEYG152	M.RESISTOR CH 1/10W 1.5K	1	
R246		ERJ6GEYG331	M.RESISTOR CH 1/10W 330	1	
R257		VRE0034E331	M.RESISTOR CH 1/10W 330	1	
R258-60		VRE0034E301	M.RESISTOR CH 1/10W 300	3	
R262,63		VRE0034E102	M.RESISTOR CH 1/10W 1K	2	
R264		VRE0034E821	M.RESISTOR CH 1/10W 820	1	
R265,66		VRE0034E102	M.RESISTOR CH 1/10W 1K	2	
R268		ERJ6GEY0R00	M.RESISTOR CH 1/10W 0	1	
R269		ERJ6GEYG272	M.RESISTOR CH 1/10W 2.7K	1	
R270		ERJ6GEYG470	M.RESISTOR CH 1/10W 47	1	
R271		ERJ6GEYG331	M.RESISTOR CH 1/10W 330	1	
R272		ERJ6GEYG152	M.RESISTOR CH 1/10W 1.5K	1	
R273		ERJ6GEYG102	M.RESISTOR CH 1/10W 1K	1	
R274		ERJ6GEYG101	M.RESISTOR CH 1/10W 100	1	
R275		ERJ6GEYG102	M.RESISTOR CH 1/10W 1K	1	
R276		ERJ6GEYG101	M.RESISTOR CH 1/10W 100	1	
R277		ERJ6GEYG152	M.RESISTOR CH 1/10W 1.5K	1	
R278		ERJ6GEYG471	M.RESISTOR CH 1/10W 470	1	
R279		ERJ6GEYG222	M.RESISTOR CH 1/10W 2.2K	1	
R280		ERJ6GEYG152	M.RESISTOR CH 1/10W 1.5K	1	
R281		ERJ6GEYG222	M.RESISTOR CH 1/10W 2.2K	1	
R282		ERJ6GEYG101	M.RESISTOR CH 1/10W 100	1	
R283		ERJ6GEYG272	M.RESISTOR CH 1/10W 2.7K	1	
R285,86		ERJ6GEYG103	M.RESISTOR CH 1/10W 10K	2	
R288		ERJ6GEYG102	M.RESISTOR CH 1/10W 1K	1	
R290		ERJ6GEYG470	M.RESISTOR CH 1/10W 47	1	
R291		ERJ6GEYG222	M.RESISTOR CH 1/10W 2.2K	1	
R292		ERJ6GEYG102	M.RESISTOR CH 1/10W 1K	1	

Refer to the P.C.BOARDS LIST, page 6-1-1, before using this page.

Ref.No.	Part No.	Part Name & Description	Pcs	Remarks
R293	ERJ6GEYG152	M.RESISTOR CH 1/10W 1.5K	1	
R294	ERJ6GEYG470	M.RESISTOR CH 1/10W 47	1	
R298	ERJ6GEYG470	M.RESISTOR CH 1/10W 47	1	
R299	ERJ6GEYG272	M.RESISTOR CH 1/10W 2.7K	1	
R300,01	VRE0034E102	M.RESISTOR CH 1/10W 1K	2	
R302	VRE0034E391	M.RESISTOR CH 1/10W 390	1	
R303	ERJ6GEYG272	M.RESISTOR CH 1/10W 2.7K	1	
R306	ERJ6GEYG683	M.RESISTOR CH 1/10W 68K	1	
R307	ERJ6GEYG821	M.RESISTOR CH 1/10W 820	1	
R308	ERJ6GEYG273	M.RESISTOR CH 1/10W 27K	1	
R309	ERJ6GEYG272	M.RESISTOR CH 1/10W 2.7K	1	
R310	ERJ6GEYG682	M.REISITOR CH 1/10W 6.8K	1	
R311	ERJ6GEYG272	M.RESISTOR CH 1/10W 2.7K	1	
R312	ERJ6GEYG222	M.RESISTOR CH 1/10W 2.2K	1	
R313	ERJ6GEYG101	M.RESISTOR CH 1/10W 100	1	
R314	ERJ6GEYG683	M.RESISTOR CH 1/10W 68K	1	
R316-18	VRE0034E301	M.RESISTOR CH 1/10W 300	3	
R320,21	VRE0034E102	M.RESISTOR CH 1/10W 1K	2	
R322	VRE0034E821	M.RESISTOR CH 1/10W 820	1	
R323,24	VRE0034E102	M.RESISTOR CH 1/10W 1K	2	
R326	ERJ6GEY0R00	M.RESISTOR CH 1/10W 0	1	
R327	ERJ6GEYG272	M.RESISTOR CH 1/10W 2.7K	1	
R328	ERJ6GEYG152	M.RESISTOR CH 1/10W 1.5K	1	
R329	ERJ6GEYG470	M.RESISTOR CH 1/10W 47	1	
R330	ERJ6GEYG331	M.RESISTOR CH 1/10W 330	1	
R331	ERJ6GEYG102	M.RESISTOR CH 1/10W 1K	1	
R332	ERJ6GEYG101	M.RESISTOR CH 1/10W 100	1	
R333	ERJ6GEYG102	M.RESISTOR CH 1/10W 1K	1	
R334	ERJ6GEYG101	M.RESISTOR CH 1/10W 100	1	
R335	ERJ6GEYG152	M.RESISTOR CH 1/10W 1.5K	1	
R336	ERJ6GEYG471	M.RESISTOR CH 1/10W 470	1	
R337	ERJ6GEYG222	M.RESISTOR CH 1/10W 2.2K	1	
R338,39	ERJ6GEYG152	M.RESISTOR CH 1/10W 1.5K	2	
R340	ERJ6GEYG101	M.RESISTOR CH 1/10W 100	1	
R341	ERJ6GEYG272	M.RESISTOR CH 1/10W 2.7K	1	
R342	ERJ6GEYG683	M.RESISTOR CH 1/10W 68K	1	
R344,45	ERJ6GEYG103	M.RESISTOR CH 1/10W 10K	2	
R346	ERJ6GEYG102	M.RESISTOR CH 1/10W 1K	1	
R347	ERJ6GEYG470	M.RESISTOR CH 1/10W 47	1	
R348	ERJ6GEYG222	M.RESISTOR CH 1/10W 2.2K	1	
R349	ERJ6GEYG470	M.RESISTOR CH 1/10W 47	1	
R350	ERJ6GEYG152	M.RESISTOR CH 1/10W 1.5K	1	
R351	ERJ6GEYG391	M.RESISTOR CH 1/10W 390	1	
R355	ERJ6GEYG470	M.RESISTOR CH 1/10W 47	1	
R356	ERJ6GEYG222	M.RESISTOR CH 1/10W 2.2K	1	
R357,58	VRE0034E102	M.RESISTOR CH 1/10W 1K	2	
R359	VRE0034E271	M.RESISTOR CH 1/10W 270	1	
R360	ERJ6GEYG272	M.RESISTOR CH 1/10W 2.7K	1	
R364	ERJ6GEYG391	M.RESISTOR CH 1/10W 390	1	
R365	ERJ6GEYG273	M.RESISTOR CH 1/10W 27K	1	
R366	ERJ6GEYG272	M.RESISTOR CH 1/10W 2.7K	1	
R367	ERJ6GEYG682	M.REISITOR CH 1/10W 6.8K	1	
R368	ERJ6GEYG272	M.RESISTOR CH 1/10W 2.7K	1	
R369	ERJ6GEYG222	M.RESISTOR CH 1/10W 2.2K	1	
R370	ERJ6GEYG101	M.RESISTOR CH 1/10W 100	1	
R371	ERJ6GEYG683	M.RESISTOR CH 1/10W 68K	1	
R372	ERJ6GEYG332	M.RESISTOR CH 1/10W 3.3K	1	
R373	ERJ6GEYG562	M.RESISTOR CH 1/10W 5.6K	1	
R374,75	ERJ6GEYG223	M.RESISTOR CH 1/10W 22K	2	
R376	ERJ6GEYG332	M.RESISTOR CH 1/10W 3.3K	1	
R396	ERJ6GEYG332	M.RESISTOR CH 1/10W 3.3K	1	
R397	ERJ6GEYG472	M.RESISTOR CH 1/10W 4.7K	1	
R398	ERJ6GEYG153	M.RESISTOR CH 1/10W 15K	1	
R399	ERJ6GEYG221	M.RESISTOR CH 1/10W 220	1	
R400	ERJ6GEYG472	M.RESISTOR CH 1/10W 4.7K	1	
R401,02	ERJ6GEYG102	M.RESISTOR CH 1/10W 1K	2	
R404	ERJ6GEYG102	M.RESISTOR CH 1/10W 1K	1	
R405,06	ERJ6GEYG221	M.RESISTOR CH 1/10W 220	2	
R409	VRE0034E391	M.RESISTOR CH 1/10W 390	1	
R410	ERJ6GEY0R00	M.RESISTOR CH 1/10W 0	1	
R411	ERJ6GEYG221	M.RESISTOR CH 1/10W 220	1	
R412	VRE0034E391	M.RESISTOR CH 1/10W 390	1	
R413-16	ERJ6GEYG223	M.RESISTOR CH 1/10W 22K	4	
R417	VRE0034E391	M.RESISTOR CH 1/10W 390	1	
R418	ERJ6GEYG151	M.RESISTOR CH 1/10W 150	1	

Ref.No.	Part No.	Part Name & Description	Pcs	Remarks
R421	ERJ6GEYG221	M.RESISTOR CH 1/10W 220	1	
R422	VRE0034E391	M.RESISTOR CH 1/10W 390	1	
R423	ERJ6GEY0R00	M.RESISTOR CH 1/10W 0	1	
R424	ERJ6GEYG101	M.RESISTOR CH 1/10W 100	1	
R425,26	ERJ6GEYG470	M.RESISTOR CH 1/10W 47	2	
R427	ERJ6GEYG221	M.RESISTOR CH 1/10W 220	1	
R428	VRE0034E391	M.RESISTOR CH 1/10W 390	1	
R429	ERJ6GEYG392	M.RESISTOR CH 1/10W 3.9K	1	
R430	ERJ6GEYG102	M.RESISTOR CH 1/10W 1K	1	
R431	VRE0034E821	M.RESISTOR CH 1/10W 820	1	
R432,33	ERJ6GEYG102	M.RESISTOR CH 1/10W 1K	2	
R434	ERJ6GEYG123	M.RESISTOR CH 1/10W 12K	1	
R435	ERJ6GEYG682	M.REISITOR CH 1/10W 6.8K	1	
R436	ERJ6GEYG822	M.RESISTOR CH 1/10W 8.2K	1	
R437	ERJ6GEYG123	M.RESISTOR CH 1/10W 12K	1	
R438	ERJ6GEYG152	M.RESISTOR CH 1/10W 1.5K	1	
R439	ERJ6GEYG102	M.RESISTOR CH 1/10W 1K	1	
R440	VRE0034E821	M.RESISTOR CH 1/10W 820	1	
R441	ERJ6GEYG102	M.RESISTOR CH 1/10W 1K	1	
R442	ERJ6GEYG222	M.RESISTOR CH 1/10W 2.2K	1	
R443	ERJ6GEY0R00	M.RESISTOR CH 1/10W 0	1	
R501	ERJ6GEYG102	M.RESISTOR CH 1/10W 1K	1	
R502	ERJ6GEYG330	M.RESISTOR CH 1/10W 33	1	
R503,04	ERJ6GEYG222	M.RESISTOR CH 1/10W 2.2K	2	
R505,06	ERJ6GEYG102	M.RESISTOR CH 1/10W 1K	2	
R507	ERJ6GEYG331	M.RESISTOR CH 1/10W 330	1	
R508	ERJ6GEYG221	M.RESISTOR CH 1/10W 220	1	
R509	ERJ6GEYG152	M.RESISTOR CH 1/10W 1.5K	1	
R510	ERJ6GEYG391	M.RESISTOR CH 1/10W 390	1	
R511	ERJ6GEYG102	M.RESISTOR CH 1/10W 1K	1	
R512	ERJ6GEYG152	M.RESISTOR CH 1/10W 1.5K	1	
R513	ERJ6GEYG683	M.RESISTOR CH 1/10W 68K	1	
R514	ERJ6GEYG182	M.RESISTOR CH 1/10W 1.8K	1	
R515	ERJ6GEYG101	M.RESISTOR CH 1/10W 100	1	
R516	ERJ6GEYG152	M.RESISTOR CH 1/10W 1.5K	1	
R517	ERJ6GEYG470	M.RESISTOR CH 1/10W 47	1	
R518	ERJ6GEYG273	M.RESISTOR CH 1/10W 27K	1	
R519	ERJ6GEYG331	M.RESISTOR CH 1/10W 330	1	
R520	ERJ6GEYG681	M.RESISTOR CH 1/10W 680	1	
R521	ERJ6GEYG391	M.RESISTOR CH 1/10W 390	1	
R522	ERJ6GEYG102	M.RESISTOR CH 1/10W 1K	1	
R523	ERJ6GEYG681	M.RESISTOR CH 1/10W 680	1	
R524	ERJ6GEYG561	M.RESISTOR CH 1/10W 560	1	
R525	ERJ6GEYG182	M.RESISTOR CH 1/10W 1.8K	1	
R526	ERJ6GEYG470	M.RESISTOR CH 1/10W 47	1	
R527	ERJ6GEYG182	M.RESISTOR CH 1/10W 1.8K	1	
R528	VRE0034E151	M.RESISTOR CH 1/10W 150	1	
R529	ERJ6GEYG152	M.RESISTOR CH 1/10W 1.5K	1	
R530	ERJ6GEYG470	M.RESISTOR CH 1/10W 47	1	
R542	ERJ6GEYG821	M.RESISTOR CH 1/10W 820	1	
R543	ERJ6GEYG392	M.RESISTOR CH 1/10W 3.9K	1	
R544	ERJ6GEYG561	M.RESISTOR CH 1/10W 560	1	
R545	ERJ6GEYG391	M.RESISTOR CH 1/10W 390	1	
R546	ERJ6GEYG561	M.RESISTOR CH 1/10W 560	1	
R547	ERJ6GEYG391	M.RESISTOR CH 1/10W 390	1	
R549	ERJ6GEYG273	M.RESISTOR CH 1/10W 27K	1	
R551	ERJ6GEYG391	M.RESISTOR CH 1/10W 390	1	
R552	ERJ6GEYG102	M.RESISTOR CH 1/10W 1K	1	
R553	ERJ6GEYG681	M.RESISTOR CH 1/10W 680	1	
R554	ERJ6GEYG561	M.RESISTOR CH 1/10W 560	1	
R555	ERJ6GEYG182	M.RESISTOR CH 1/10W 1.8K	1	
R556	ERJ6GEYG470	M.RESISTOR CH 1/10W 47	1	
R557	ERJ6GEYG182	M.RESISTOR CH 1/10W 1.8K	1	
R558	VRE0034E151	M.RESISTOR CH 1/10W 150	1	
R559	ERJ6GEYG152	M.RESISTOR CH 1/10W 1.5K	1	
R560	ERJ6GEYG470	M.RESISTOR CH 1/10W 47	1	
R564	ERJ6GEYG102	M.RESISTOR CH 1/10W 1K	1	
R565	ERJ6GEYG222	M.RESISTOR CH 1/10W 2.2K	1	
R566	ERJ6GEYG182	M.RESISTOR CH 1/10W 1.8K	1	
R567	ERJ6GEYG221	M.RESISTOR CH 1/10W 220	1	
R568	ERJ6GEYG470	M.RESISTOR CH 1/10W 47	1	
R569	ERJ6GEYG153	M.RESISTOR CH 1/10W 15K	1	
R570	ERJ6GEYG223	M.RESISTOR CH 1/10W 22K	1	
R571	ERJ6GEYG470	M.RESISTOR CH 1/10W 47	1	
R572	ERJ6GEYG472	M.RESISTOR CH 1/10W 4.7K	1	

Refer to the P.C.BOARDS LIST, page 6-1-1, before using this page.

Ref.No.		Part No.	Part Name & Description	Pcs	Remarks
R573,74		ERJ6GEYG102	M.RESISTOR CH 1/10W 1K	2	
R576		ERJ6GEYG103	M.RESISTOR CH 1/10W 10K	1	
R577		ERJ6GEYG102	M.RESISTOR CH 1/10W 1K	1	
R578		ERJ6GEYG472	M.RESISTOR CH 1/10W 4.7K	1	
R579,80		ERJ6GEYG121	M.RESISTOR CH 1/10W 120	2	
R581,82		ERJ6GEYG821	M.RESISTOR CH 1/10W 820	2	
R583		ERJ6GEYG470	M.RESISTOR CH 1/10W 47	1	
R584		ERJ6GEYG153	M.RESISTOR CH 1/10W 15K	1	
R585		ERJ6GEYG223	M.RESISTOR CH 1/10W 22K	1	
R586		ERJ6GEYG470	M.RESISTOR CH 1/10W 47	1	
R587		ERJ6GEYG472	M.RESISTOR CH 1/10W 4.7K	1	
R588		ERJ6GEYG102	M.RESISTOR CH 1/10W 1K	1	
R590		ERJ6GEYG103	M.RESISTOR CH 1/10W 10K	1	
R591		ERJ6GEYG102	M.RESISTOR CH 1/10W 1K	1	
R592		ERJ6GEYG472	M.RESISTOR CH 1/10W 4.7K	1	
R593,94		ERJ6GEYG121	M.RESISTOR CH 1/10W 120	2	
R595,96		ERJ6GEYG821	M.RESISTOR CH 1/10W 820	2	
R597		ERJ6GEYG102	M.RESISTOR CH 1/10W 1K	1	
R598		ERJ6GEYG103	M.RESISTOR CH 1/10W 10K	1	
R599		ERJ6GEYG822	M.RESISTOR CH 1/10W 8.2K	1	
R600		ERJ6GEYG102	M.RESISTOR CH 1/10W 1K	1	
R601,02		VRE0034E301	M.RESISTOR CH 1/10W 300	2	
R603		ERJ6GEYG152	M.RESISTOR CH 1/10W 1.5K	1	
R604		ERJ6GEYG151	M.RESISTOR CH 1/10W 150	1	
R605		ERJ6GEYG102	M.RESISTOR CH 1/10W 1K	1	
R606		ERJ6GEYG182	M.RESISTOR CH 1/10W 1.8K	1	
R607		ERJ6GEYG332	M.RESISTOR CH 1/10W 3.3K	1	
R608		ERJ6GEYG470	M.RESISTOR CH 1/10W 47	1	
R609,10		ERJ6GEYG122	M.RESISTOR CH 1/10W 1.2K	2	
R611		ERJ6GEY0R00	M.RESISTOR CH 1/10W 0	1	
R612		ERJ6GEYG272	M.RESISTOR CH 1/10W 2.7K	1	
R613		ERJ6GEYG182	M.RESISTOR CH 1/10W 1.8K	1	
R614		ERJ6GEYG392	M.RESISTOR CH 1/10W 3.9K	1	
R615		ERJ6GEYG151	M.RESISTOR CH 1/10W 150	1	
R616		ERJ6GEYG222	M.RESISTOR CH 1/10W 2.2K	1	
R617		ERJ6GEYG330	M.RESISTOR CH 1/10W 33	1	
R618		ERJ6GEYG222	M.RESISTOR CH 1/10W 2.2K	1	
R619		ERJ6GEYG102	M.RESISTOR CH 1/10W 1K	1	
R620		ERJ6GEYG271	M.RESISTOR CH 1/10W 270	1	
R621		ERJ6GEYG821	M.RESISTOR CH 1/10W 820	1	
R622		ERJ6GEYG152	M.RESISTOR CH 1/10W 1.5K	1	
R623		ERJ6GEYG470	M.RESISTOR CH 1/10W 47	1	
R630		ERJ6GEYG272	M.RESISTOR CH 1/10W 2.7K	1	
R633		ERJ6GEY0R00	M.RESISTOR CH 1/10W 0	1	
R634		ERJ6GEYG683	M.RESISTOR CH 1/10W 68K	1	
R635		ERJ6GEYG104	M.RESISTOR CH 1/10W 100K	1	
R636		ERJ6GEYG562	M.RESISTOR CH 1/10W 5.6K	1	
R637		ERJ6GEYG183	M.RESISTOR CH 1/10W 18K	1	
R642		ERJ6GEYG332	M.RESISTOR CH 1/10W 3.3K	1	
R643		ERJ6GEYG822	M.RESISTOR CH 1/10W 8.2K	1	
R644		ERJ6GEYG133	M.RESISTOR CH 1/10W 13K	1	
R645		ERJ6GEYG182	M.RESISTOR CH 1/10W 1.8K	1	
R646		ERJ6GEYG681	M.RESISTOR CH 1/10W 680	1	
R647		ERJ6GEYG471	M.RESISTOR CH 1/10W 470	1	
R648,49		ERJ6GEYG473	M.RESISTOR CH 1/10W 47K	2	
R650		ERJ6GEYG221	M.RESISTOR CH 1/10W 220	1	
R651		ERJ6GEYG682	M.REISITOR CH 1/10W 6.8K	1	
R652		ERJ6GEYG182	M.RESISTOR CH 1/10W 1.8K	1	
R653		ERJ6GEYG122	M.RESISTOR CH 1/10W 1.2K	1	
R654,55		ERJ6GEYG101	M.RESISTOR CH 1/10W 100	2	
R656		ERJ6GEYG122	M.RESISTOR CH 1/10W 1.2K	1	
R657		ERJ6GEYG182	M.RESISTOR CH 1/10W 1.8K	1	
R658		ERJ6GEYG102	M.RESISTOR CH 1/10W 1K	1	
R659		ERJ6GEYG681	M.RESISTOR CH 1/10W 680	1	
R660		ERJ6GEYG102	M.RESISTOR CH 1/10W 1K	1	
R661		ERJ6GEYG222	M.RESISTOR CH 1/10W 2.2K	1	
R662		ERJ6GEYG182	M.RESISTOR CH 1/10W 1.8K	1	
R663		ERJ6GEYG222	M.RESISTOR CH 1/10W 2.2K	1	
R664		ERJ6GEYG682	M.REISITOR CH 1/10W 6.8K	1	
R665		ERJ6GEYG122	M.RESISTOR CH 1/10W 1.2K	1	
R666		ERJ6GEYG102	M.RESISTOR CH 1/10W 1K	1	
R667		ERJ6GEYG182	M.RESISTOR CH 1/10W 1.8K	1	
R668		ERJ6GEYG102	M.RESISTOR CH 1/10W 1K	1	
R669		ERJ6GEYG681	M.RESISTOR CH 1/10W 680	1	
R670		ERJ6GEYG331	M.RESISTOR CH 1/10W 330	1	

Ref.No.		Part No.	Part Name & Description	Pcs	Remarks
R671		ERJ6GEYG152	M.RESISTOR CH 1/10W 1.5K	1	
R672,73		ERJ6GEYG102	M.RESISTOR CH 1/10W 1K	2	
R674		ERJ6GEYG561	M.RESISTOR CH 1/10W 560	1	
R675		ERJ6GEY0R00	M.RESISTOR CH 1/10W 0	1	
R676		ERJ6GEYG152	M.RESISTOR CH 1/10W 1.5K	1	
R677		ERJ6GEYG102	M.RESISTOR CH 1/10W 1K	1	
R678		ERJ6GEYG152	M.RESISTOR CH 1/10W 1.5K	1	
R679		ERJ6GEYG102	M.RESISTOR CH 1/10W 1K	1	
R680		ERJ6GEYG561	M.RESISTOR CH 1/10W 560	1	
R681		ERJ6GEYG330	M.RESISTOR CH 1/10W 33	1	
R682		ERJ6GEYG681	M.RESISTOR CH 1/10W 680	1	
R683		ERJ6GEYG124	M.RESISTOR CH 1/10W 120K	1	
R684		ERJ6GEYG152	M.RESISTOR CH 1/10W 1.5K	1	
R685		ERJ6GEYG102	M.RESISTOR CH 1/10W 1K	1	
R686		ERJ6GEYG181	M.RESISTOR CH 1/10W 180	1	
R687		ERJ6GEYG102	M.RESISTOR CH 1/10W 1K	1	
R688		ERJ6GEYG561	M.RESISTOR CH 1/10W 560	1	
R689		ERJ6GEYG152	M.RESISTOR CH 1/10W 1.5K	1	
R690,91		ERJ6GEYG122	M.RESISTOR CH 1/10W 1.2K	2	
R692,93		ERJ6GEYG470	M.RESISTOR CH 1/10W 47	2	
R694,95		ERJ6GEYG102	M.RESISTOR CH 1/10W 1K	2	
R696,97		ERJ6GEYG122	M.RESISTOR CH 1/10W 1.2K	2	
R698,99		ERJ6GEYG470	M.RESISTOR CH 1/10W 47	2	
R700,01		ERJ6GEYG102	M.RESISTOR CH 1/10W 1K	2	
R702		ERJ6GEYG103	M.RESISTOR CH 1/10W 10K	1	
R703		ERJ6GEYG472	M.RESISTOR CH 1/10W 4.7K	1	
R704-07		ERJ6GEYG102	M.RESISTOR CH 1/10W 1K	4	
R709		ERJ6GEY0R00	M.RESISTOR CH 1/10W 0	1	
R711		ERJ6GEY0R00	M.RESISTOR CH 1/10W 0	1	
R714,15		ERJ6GEY0R00	M.RESISTOR CH 1/10W 0	2	
R716		ERJ6GEYG101	M.RESISTOR CH 1/10W 100	1	
R717		ERJ6GEYG122	M.RESISTOR CH 1/10W 1.2K	1	
R718		ERJ6GEYG154	M.RESISTOR CH 1/10W 150K	1	
R719		ERJ6GEYG102	M.RESISTOR CH 1/10W 1K	1	
R720		ERJ6GEYG681	M.RESISTOR CH 1/10W 680	1	
R721		ERJ6GEYG470	M.RESISTOR CH 1/10W 47	1	
R722		ERJ6GEYG182	M.RESISTOR CH 1/10W 1.8K	1	
R723		VRE0034E151	M.RESISTOR CH 1/10W 150	1	
R724		ERJ6GEYG152	M.RESISTOR CH 1/10W 1.5K	1	
R725		ERJ6GEYG470	M.RESISTOR CH 1/10W 47	1	
R726		ERJ6GEYG472	M.RESISTOR CH 1/10W 4.7K	1	
R727		ERJ6GEYG103	M.RESISTOR CH 1/10W 10K	1	
R728		ERJ6GEYG561	M.RESISTOR CH 1/10W 560	1	
R729		ERJ6GEYG391	M.RESISTOR CH 1/10W 390	1	
R730		ERJ6GEYG561	M.RESISTOR CH 1/10W 560	1	
R731		ERJ6GEYG391	M.RESISTOR CH 1/10W 390	1	
R732		ERJ6GEYG561	M.RESISTOR CH 1/10W 560	1	
R733		ERJ6GEYG391	M.RESISTOR CH 1/10W 390	1	
R734		ERJ6GEYG561	M.RESISTOR CH 1/10W 560	1	
R735		ERJ6GEYG391	M.RESISTOR CH 1/10W 390	1	
R736		ERJ6GEYG101	M.RESISTOR CH 1/10W 100	1	
R737		ERJ6GEYG122	M.RESISTOR CH 1/10W 1.2K	1	
R739,40		ERJ6GEYG152	M.RESISTOR CH 1/10W 1.5K	2	
R741		ERJ6GEYG105	M.RESISTOR CH 1/10W 1M	1	
R742		ERJ6GEYG122	M.RESISTOR CH 1/10W 1.2K	1	
R743		ERJ6GEYG472	M.RESISTOR CH 1/10W 4.7K	1	
R744		ERJ6GEY0R00	M.RESISTOR CH 1/10W 0	1	
R800		ERJ6GEYG223	M.RESISTOR CH 1/10W 22K	1	
R801		ERJ6GEYG562	M.RESISTOR CH 1/10W 5.6K	1	
R802		ERJ6GEYG331	M.RESISTOR CH 1/10W 330	1	
R803		ERJ6GEYG103	M.RESISTOR CH 1/10W 10K	1	
R804		ERJ6GEYG183	M.RESISTOR CH 1/10W 18K	1	
R805		ERJ6GEYG102	M.RESISTOR CH 1/10W 1K	1	
R806		ERJ6GEYG472	M.RESISTOR CH 1/10W 4.7K	1	
R807		ERJ6GEYG152	M.RESISTOR CH 1/10W 1.5K	1	
R808-10		ERJ6GEYG122	M.RESISTOR CH 1/10W 1.2K	3	
R811		ERJ6GEYG222	M.RESISTOR CH 1/10W 2.2K	1	
R812-14		ERJ6GEYG122	M.RESISTOR CH 1/10W 1.2K	3	
R815		ERJ6GEYG222	M.RESISTOR CH 1/10W 2.2K	1	
R816		ERJ6GEYG122	M.RESISTOR CH 1/10W 1.2K	1	
R817		ERJ6GEYG392	M.RESISTOR CH 1/10W 3.9K	1	
R819,20		ERJ6GEYG103	M.RESISTOR CH 1/10W 10K	2	
R821		ERJ6GEYG392	M.RESISTOR CH 1/10W 3.9K	1	
R822,23		ERJ6GEYG103	M.RESISTOR CH 1/10W 10K	2	
R826		ERJ6GEYG153	M.RESISTOR CH 1/10W 15K	1	

Refer to the P.C.BOARDS LIST, page 6-1-1, before using this page.

Ref.No.		Part No.	Part Name & Description	Pcs	Remarks
R827		ERJ6GEYG392	M.RESISTOR CH 1/10W 3.9K	1	
R828		ERJ6GEYG562	M.RESISTOR CH 1/10W 5.6K	1	
R829		ERJ6GEYG103	M.RESISTOR CH 1/10W 10K	1	
R830		ERJ6GEYG122	M.RESISTOR CH 1/10W 1.2K	1	
R831		ERJ6GEYG222	M.RESISTOR CH 1/10W 2.2K	1	
R832		ERJ6GEYG392	M.RESISTOR CH 1/10W 3.9K	1	
R833		ERJ6GEYG122	M.RESISTOR CH 1/10W 1.2K	1	
R834		ERJ6GEYG182	M.RESISTOR CH 1/10W 1.8K	1	
R835		ERJ6GEYG392	M.RESISTOR CH 1/10W 3.9K	1	
R836		ERJ6GEYG682	M.REISITOR CH 1/10W 6.8K	1	
R837		ERJ6GEYG392	M.RESISTOR CH 1/10W 3.9K	1	
R838		ERJ6GEYG682	M.REISITOR CH 1/10W 6.8K	1	
R839,40		ERJ6GEYG392	M.RESISTOR CH 1/10W 3.9K	2	
R841		ERJ6GEYG682	M.REISITOR CH 1/10W 6.8K	1	
R842		ERJ6GEYG392	M.RESISTOR CH 1/10W 3.9K	1	
R843		ERJ6GEYG682	M.REISITOR CH 1/10W 6.8K	1	
R844-46		ERJ6GEYG392	M.RESISTOR CH 1/10W 3.9K	3	
R847		ERJ6GEY0R00	M.RESISTOR CH 1/10W 0	1	
R848		ERJ6GEYG102	M.RESISTOR CH 1/10W 1K	1	
R849		ERJ6GEY0R00	M.RESISTOR CH 1/10W 0	1	
R850		ERJ6GEYG102	M.RESISTOR CH 1/10W 1K	1	
R851		ERJ6GEY0R00	M.RESISTOR CH 1/10W 0	1	
R852		ERJ6GEYG102	M.RESISTOR CH 1/10W 1K	1	
R853		ERJ6GEY0R00	M.RESISTOR CH 1/10W 0	1	
R854		ERJ6GEYG102	M.RESISTOR CH 1/10W 1K	1	
R855		ERJ6GEY0R00	M.RESISTOR CH 1/10W 0	1	
R856		ERJ6GEYG102	M.RESISTOR CH 1/10W 1K	1	
R857		ERJ6GEY0R00	M.RESISTOR CH 1/10W 0	1	
R858		ERJ6GEYG102	M.RESISTOR CH 1/10W 1K	1	
R859-62		ERJ6GEY0R00	M.RESISTOR CH 1/10W 0	4	
R867		ERJ6GEYG104	M.RESISTOR CH 1/10W 100K	1	
R868		ERJ6GEYG562	M.RESISTOR CH 1/10W 5.6K	1	
R869		ERJ6GEYG273	M.RESISTOR CH 1/10W 27K	1	
R870		ERJ6GEYG472	M.RESISTOR CH 1/10W 4.7K	1	
R871		ERJ6GEYG562	M.RESISTOR CH 1/10W 5.6K	1	
R872		ERJ6GEYG273	M.RESISTOR CH 1/10W 27K	1	
R873		ERJ6GEY0R00	M.RESISTOR CH 1/10W 0	1	
R876		ERJ6GEY0R00	M.RESISTOR CH 1/10W 0	1	
R878		ERJ6GEY0R00	M.RESISTOR CH 1/10W 0	1	
R880		ERJ6GEY0R00	M.RESISTOR CH 1/10W 0	1	
R882		ERJ6GEY0R00	M.RESISTOR CH 1/10W 0	1	
R883,84		ERJ6GEYG103	M.RESISTOR CH 1/10W 10K	2	
R886,87		ERJ6GEY0R00	M.RESISTOR CH 1/10W 0	2	
R889,90		ERJ6GEYG392	M.RESISTOR CH 1/10W 3.9K	2	
R891		ERJ6GEYG563	M.RESISTOR CH 1/10W 56K	1	
R892		ERJ6GEYG472	M.RESISTOR CH 1/10W 4.7K	1	
R893		ERJ6GEYG272	M.RESISTOR CH 1/10W 2.7K	1	
R894		ERJ6GEYG102	M.RESISTOR CH 1/10W 1K	1	
R895		ERJ6GEYG103	M.RESISTOR CH 1/10W 10K	1	
R896		ERJ6GEYG122	M.RESISTOR CH 1/10W 1.2K	1	
R897		ERJ6GEYG222	M.RESISTOR CH 1/10W 2.2K	1	
R898,99		ERJ6GEYG273	M.RESISTOR CH 1/10W 27K	2	
R900		ERJ6GEYG332	M.RESISTOR CH 1/10W 3.3K	1	
R901-05		ERJ6GEYG103	M.RESISTOR CH 1/10W 10K	5	
R906		ERJ6GEYG224	M.RESISTOR CH 1/10W 220K	1	
R907-09		ERJ6GEYG103	M.RESISTOR CH 1/10W 10K	3	
R910		ERJ6GEYG152	M.RESISTOR CH 1/10W 1.5K	1	
R911		ERJ6GEYG392	M.RESISTOR CH 1/10W 3.9K	1	
R912-16		ERJ6GEYG103	M.RESISTOR CH 1/10W 10K	5	
R917		ERJ6GEYG562	M.RESISTOR CH 1/10W 5.6K	1	
R925,26		ERJ6GEYG122	M.RESISTOR CH 1/10W 1.2K	2	
R928		ERJ6GEYG562	M.RESISTOR CH 1/10W 5.6K	1	
R929,30		ERJ6GEYG392	M.RESISTOR CH 1/10W 3.9K	2	
R1001		ERJ6GEYG681	M.RESISTOR CH 1/10W 680	1	
R1002		ERJ6GEYG621	M.RESISTOR CH 1/10W 620	1	
SW201		VSS0207	SWITCH	1	
SW202,03		VJP1990	CONNECTOR	2	
SW800		VSS0126	SWITCH	1	
SW801		VJP1990	CONNECTOR	1	
SWS801		VJS1990	CONNECTOR	1	

Ref.No.		Part No.	Part Name & Description	Pcs	Remarks
TH501-04		ERTD2FGL102S	THERMISTOR	4	
TP1-P4		VJR0646	TEST POINT	4	
TP6,P7		VJR0646	TEST POINT	2	
TP201-04		VJR0646	TEST POINT	4	
TP206		VJR0646	TEST POINT	1	
TP501-03		VJR0646	TEST POINT	3	
TP505-07		VJR0646	TEST POINT	3	
TP800-03		VJR0646	TEST POINT	4	
TP805		VJR0646	TEST POINT	1	
TPG1,G2		VJR0646	TEST POINT	2	
TPG201		VJR0646	TEST POINT	1	
TPG501		VJR0646	TEST POINT	1	
VC201		ECV1ZW20X60	V.CAPACITOR 20P	1	
VC501		ECV1ZW30X53	V.CAPACITOR 30P	1	
VR1		VRV0110B502	V.RESISTOR 5K	1	FOR VEP80632A
VR1		VRV0109B201	V.RESISTOR 200	1	FOR VEP88063C
VR2		VRV0110B502	V.RESISTOR 5K	1	FOR VEP80632A
VR2		VRV0109B502	V.RESISTOR 5K	1	FOR VEP88063C
VR3		VRV0109B501	V.RESISTOR 500	1	
VR4		VRV0109B502	V.RESISTOR 5K	1	
VR200		VRV0064B501	V.RESISTOR 500	1	
VR201		VRV0064B503	V.RESISTOR 50K	1	
VR202		VRV0064B103	V.RESISTOR 10K	1	
VR203		VRV0109B501	V.RESISTOR 500	1	
VR204		VRV0109B503	V.RESISTOR 50K	1	
VR205		VRV0109B501	V.RESISTOR 500	1	
VR206		VRV0109B503	V.RESISTOR 50K	1	
VR207		VRV0109B201	V.RESISTOR 200	1	
VR208,09		VRV0109B501	V.RESISTOR 500	2	
VR210-13		VRV0109B102	V.RESISTOR 1K	4	
VR501		VRV0109B501	V.RESISTOR 500	1	
VR502		VRV0109B503	V.RESISTOR 50K	1	
VR503-06		VRV0064B503	V.RESISTOR 50K	4	
VR507		VRV0109B201	V.RESISTOR 200	1	
VR508,09		VRV0109B101	V.RESISTOR 100	2	
VR510		VRV0109B203	V.RESISTOR 20K	1	
VR511		VRV0109B502	V.RESISTOR 5K	1	
VR512		VRV0064B503	V.RESISTOR 50K	1	
VR513,14		VRV0109B102	V.RESISTOR 1K	2	
VR515,16		VRV0109B501	V.RESISTOR 500	2	
VR517		VRV0064B503	V.RESISTOR 50K	1	
VR800,01		VRV0109B202	V.RESISTOR 2K	2	
VR802,03		VRV0109B203	V.RESISTOR 20K	2	
			MISCELLANEOUS		
		VJR0421	PIN	7	
		VJR0422	PIN	3	
		VML2143	CARD PULLER	1	
		VML2144	CARD PULLER	1	
		VMS4174	PIN	6	
		VMZ1547	BARRIER	1	
		VSC3056	SHIELD CASE	1	
		VXA3966	P.C.B. SHIELD PLATE	1	
		XNG26E	NUT	4	
		XYNV3+K6FR	SCREW	1	
		XYN26+C12	SCREW	4	

Refer to the P.C.BOARDS LIST, page 6-1-1, before using this page.

Ref.No.		Part No.	Part Name & Description	Pcs	Remarks
	■	VEP83098A	P.C.BOARD W/COMPONENT		FOR AU-65-P
			W3 MOD & DEMOD		
			CAPACITORS		
C1,C2		ECEA1CU101	E.CAPACITOR 16V 100U	2	
C3		ECUM1E104ZFN	C.CAPACITOR CH 25V 0.1U	1	
C4		ECUM1H100DCN	C.CAPACITOR CH 50V 10P	1	
C5		ECUM1H020CCN	C.CAPACITOR CH 50V 2P	1	
C6		ECUM1H080DCN	C.CAPACITOR CH 50V 80P	1	
C7		ECUM1E104ZFN	C.CAPACITOR CH 25V 0.1U	1	
C8		VCM0021	M.CAPACITOR	1	
C9		VCM0023	M.CAPACITOR 379P	1	
C10,11		ECUM1E104ZFN	C.CAPACITOR CH 25V 0.1U	2	
C12,13		ECUM1H103KBN	C.CAPACITOR CH 50V 0.01U	2	
C21		ECUM1H470JCN	C.CAPACITOR CH 50V 47P	1	
C22		ECUM1H330JCN	C.CAPACITOR CH 50V 33P	1	
C23		ECUM1H221JCN	C.CAPACITOR CH 50V 220P	1	
C24		ECUM1H104KBM	C.CAPACITOR CH 50V 0.1U	1	
C25		ECUM1C104KBN	C.CAPACITOR CH 16V 0.1U	1	
C26		ECUM1H331JCN	C.CAPACITOR CH 50V 330P	1	
C27		ECUM1E104ZFN	C.CAPACITOR CH 25V 0.1U	1	
C28		ECUM1H472KBN	C.CAPACITOR CH 50V 4700P	1	
C29,30		ECUM1E104ZFN	C.CAPACITOR CH 25V 0.1U	2	
C31		ECEA1HUR47	E.CAPACITOR 50V 0.47U	1	
C32		VCM0047	M.CAPACITOR	1	
C33		ECUM1H103KBN	C.CAPACITOR CH 50V 0.01U	1	
C34		ECEA1AU221	E.CAPACITOR 10V 220U	1	
C35		ECUM1E104ZFN	C.CAPACITOR CH 25V 0.1U	1	
C36		ECUM1H220JUN	C.CAPACITOR CH 50V 22P	1	
C37		ECUM1H103KBN	C.CAPACITOR CH 50V 0.01U	1	
C38		ECUM1E104ZFN	C.CAPACITOR CH 25V 0.1U	1	
C39		ECUM1H560JCN	C.CAPACITOR CH 50V 56P	1	
C40		ECUM1H151JCN	C.CAPACITOR CH 50V 150P	1	
C41		ECUM1H100DCN	C.CAPACITOR CH 50V 10P	1	
C42		ECEA1CU470	E.CAPACITOR 16V 47U	1	
C43,44		ECUM1H103KBN	C.CAPACITOR CH 50V 0.01U	2	
C45-47		ECUM1E104ZFN	C.CAPACITOR CH 25V 0.1U	3	
C48		ECUM1H103KBN	C.CAPACITOR CH 50V 0.01U	1	
C49		ECUM1H332KBN	C.CAPACITOR CH 50V 3300P	1	
C50,51		ECUM1H560JCN	C.CAPACITOR CH 50V 56P	2	
C52		ECUM1E104ZFN	C.CAPACITOR CH 25V 0.1U	1	
C54		ECUM1H471JCN	C.CAPACITOR CH 50V 470P	1	
C56		ECUM1E104ZFN	C.CAPACITOR CH 25V 0.1U	1	
C57		ECEA1CU101	E.CAPACITOR 16V 100U	1	
C60		ECUM1E104ZFN	C.CAPACITOR CH 25V 0.1U	1	
C61		ECEA1CU101	E.CAPACITOR 16V 100U	1	
C62		ECUM1E104ZFN	C.CAPACITOR CH 25V 0.1U	1	
C63		ECEA1CU101	E.CAPACITOR 16V 100U	1	
C64		ECUM1E104ZFN	C.CAPACITOR CH 25V 0.1U	1	
C65		ECSF1CE106	T.CAPACITOR 16V 10U	1	
C66		ECUM1E104ZFN	C.CAPACITOR CH 25V 0.1U	1	
C67		ECSF1CE106	T.CAPACITOR 16V 10U	1	
C68		ECUM1E104ZFN	C.CAPACITOR CH 25V 0.1U	1	
C69,70		ECSF1CE106	T.CAPACITOR 16V 10U	2	
C71		ECUM1E104ZFN	C.CAPACITOR CH 25V 0.1U	1	
C72		ECEA1CU101	E.CAPACITOR 16V 100U	1	
C73,74		ECUM1E104ZFN	C.CAPACITOR CH 25V 0.1U	2	
C201,02		ECEA1CU101	E.CAPACITOR 16V 100U	2	
C203		ECUM1H100DCN	C.CAPACITOR CH 50V 10P	1	
C204		ECUM1H020CCN	C.CAPACITOR CH 50V 2P	1	
C205,06		ECUM1E104ZFN	C.CAPACITOR CH 25V 0.1U	2	
C213		VCM0021	M.CAPACITOR	1	
C214		VCM0024	M.CAPACITOR 270P	1	
C215		ECUM1H180JCN	C.CAPACITOR CH 50V 18P	1	
C216		ECUM1H560JCN	C.CAPACITOR CH 50V 56P	1	
C217		ECUM1H103KBN	C.CAPACITOR CH 50V 0.01U	1	
C218,19		ECUM1E104ZFN	C.CAPACITOR CH 25V 0.1U	2	
C220,21		ECUM1H103KBN	C.CAPACITOR CH 50V 0.01U	2	

Ref.No.		Part No.	Part Name & Description	Pcs	Remarks
C222		ECEA1HUR47	E.CAPACITOR 50V 0.47U	1	
C223		ECUM1E104ZFN	C.CAPACITOR CH 25V 0.1U	1	
C224		ECUM1H271JCN	C.CAPACITOR CH 50V 270P	1	
C225		ECUM1H560JCN	C.CAPACITOR CH 50V 56P	1	
C226		VCM0046	M.CAPACITOR 229P	1	
C227		ECUM1E104ZFN	C.CAPACITOR CH 25V 0.1U	1	
C228		ECUM1H103KBN	C.CAPACITOR CH 50V 0.01U	1	
C229		ECEA1AU221	E.CAPACITOR 10V 220U	1	
C230		ECUM1E104ZFN	C.CAPACITOR CH 25V 0.1U	1	
C231		ECUM1H220JUN	C.CAPACITOR CH 50V 22P	1	
C232		ECUM1H103KBN	C.CAPACITOR CH 50V 0.01U	1	
C233		ECUM1H100DCN	C.CAPACITOR CH 50V 10P	1	
C234		ECUM1H220JCN	C.CAPACITOR CH 50V 22P	1	
C235		ECUM1H560JCN	C.CAPACITOR CH 50V 56P	1	
C236		ECUM1H060DCN	C.CAPACITOR CH 50V 6P	1	
C237		ECUM1H220JCN	C.CAPACITOR CH 50V 22P	1	
C238		ECUM1H180JCN	C.CAPACITOR CH 50V 18P	1	
C239		ECUM1H121JCN	C.CAPACITOR CH 50V 120P	1	
C240		ECUM1H100DCN	C.CAPACITOR CH 50V 10P	1	
C241		ECUM1H220JCN	C.CAPACITOR CH 50V 22P	1	
C242		ECUM1H221JCN	C.CAPACITOR CH 50V 220P	1	
C243		ECUM1E104ZFN	C.CAPACITOR CH 25V 0.1U	1	
C244		ECUM1H103KBN	C.CAPACITOR CH 50V 0.01U	1	
C245		ECEA1CU470	E.CAPACITOR 16V 47U	1	
C246-48		ECUM1E104ZFN	C.CAPACITOR CH 25V 0.1U	3	
C252,53		ECUM1H103KBN	C.CAPACITOR CH 50V 0.01U	2	
C254		ECEA1CU470	E.CAPACITOR 16V 47U	1	
C255		ECUM1H103KBN	C.CAPACITOR CH 50V 0.01U	1	
C256,57		ECUM1E104ZFN	C.CAPACITOR CH 25V 0.1U	2	
C258		ECUM1H220JCN	C.CAPACITOR CH 50V 22P	1	
C259		ECUM1H330JCN	C.CAPACITOR CH 50V 33P	1	
C260		ECKF1H103KB	C.CAPACITOR 50V 0.01U	1	
C302		ECUM1H103KBN	C.CAPACITOR CH 50V 0.01U	1	
C303		ECUM1H220JCN	C.CAPACITOR CH 50V 22P	1	
C304		ECUM1H103KBN	C.CAPACITOR CH 50V 0.01U	1	
C306		ECUM1H220JCN	C.CAPACITOR CH 50V 22P	1	
C307		ECEA1AU101	E.CAPACITOR 10V 100U	1	
C308,09		ECUM1H103KBN	C.CAPACITOR CH 50V 0.01U	2	
C310		ECEA1AU101	E.CAPACITOR 10V 100U	1	
C311		ECUM1H103KBN	C.CAPACITOR CH 50V 0.01U	1	
C316		ECUM1E104ZFN	C.CAPACITOR CH 25V 0.1U	1	
C322		ECUM1E104ZFN	C.CAPACITOR CH 25V 0.1U	1	
C325		ECUM1E104ZFN	C.CAPACITOR CH 25V 0.1U	1	
C342		ECUM1H103KBN	C.CAPACITOR CH 50V 0.01U	1	
C343		ECUM1H120JCN	C.CAPACITOR CH 50V 12P	1	
C344		ECUM1H121JCN	C.CAPACITOR CH 50V 120P	1	
C345		ECUM1H100DCN	C.CAPACITOR CH 50V 10P	1	
C346		ECUM1H103KBN	C.CAPACITOR CH 50V 0.01U	1	
C347,48		ECEA1AU101	E.CAPACITOR 10V 100U	2	
C349		ECUM1H103KBN	C.CAPACITOR CH 50V 0.01U	1	
C350		ECUM1H181JCN	C.CAPACITOR CH 50V 180P	1	
C351		ECUM1H221JCN	C.CAPACITOR CH 50V 220P	1	
C352		ECUM1H103KBN	C.CAPACITOR CH 50V 0.01U	1	
C353		ECUM1H101JCN	C.CAPACITOR CH 50V 100P	1	
C354,55		ECUM1H103KBN	C.CAPACITOR CH 50V 0.01U	2	
C356		ECUM1E104ZFN	C.CAPACITOR CH 25V 0.1U	1	
C357		ECEA1HU2R2	E.CAPACITOR 50V 2.2U	1	
C358		ECEA1AU101	E.CAPACITOR 10V 100U	1	
C377,78		ECUM1H103KBN	C.CAPACITOR CH 50V 0.01U	2	
C380		ECUM1E104ZFN	C.CAPACITOR CH 25V 0.1U	1	
C381		ECUM1H103KBN	C.CAPACITOR CH 50V 0.01U	1	
C382		ECUM1E104ZFN	C.CAPACITOR CH 25V 0.1U	1	
C383		ECEA1AU101	E.CAPACITOR 10V 100U	1	
C386		ECUM1H050DCN	C.CAPACITOR CH 50V 50P	1	
C387		ECUM1H100DCN	C.CAPACITOR CH 50V 10P	1	
C389		ECUM1H391JCN	C.CAPACITOR CH 50V 390P	1	
C391		ECUM1H560JCN	C.CAPACITOR CH 50V 56P	1	
C392		ECUM1H103KBN	C.CAPACITOR CH 50V 0.01U	1	
C393		ECEA1AU101	E.CAPACITOR 10V 100U	1	
C394		ECUM1H103KBN	C.CAPACITOR CH 50V 0.01U	1	
C395		ECUM1E104ZFN	C.CAPACITOR CH 25V 0.1U	1	
C396,97		ECUM1H103KBN	C.CAPACITOR CH 50V 0.01U	2	
C398		ECUM1H180JCN	C.CAPACITOR CH 50V 18P	1	
C399		ECUM1H103KBN	C.CAPACITOR CH 50V 0.01U	1	
C400		ECUM1E104ZFN	C.CAPACITOR CH 25V 0.1U	1	

Refer to the P.C.BOARDS LIST, page 6-1-1, before using this page.

Ref.No.	Part No.	Part Name & Description	Pcs	Remarks
C401-03	ECUM1H103KBN	C.CAPACITOR CH 50V 0.01U	3	
C404	ECEA1AU101	E.CAPACITOR 10V 100U	1	
C405-07	ECUM1E104ZFN	C.CAPACITOR CH 25V 0.1U	3	
C408,09	ECUM1H330JCN	C.CAPACITOR CH 50V 33P	2	
C410	ECEA1AU471	E.CAPACITOR 10V 470U	1	
C411	ECUM1E104ZFN	C.CAPACITOR CH 25V 0.1U	1	
C412	ECUM1H221JCN	C.CAPACITOR CH 50V 220P	1	
C413	ECEA1AU101	E.CAPACITOR 10V 100U	1	
C414	ECUM1H331JCN	C.CAPACITOR CH 50V 330P	1	
C415	ECUM1H470JCN	C.CAPACITOR CH 50V 47P	1	
C416	ECUM1H102JCN	C.CAPACITOR CH 50V 1000P	1	
C417,18	ECUM1E104ZFN	C.CAPACITOR CH 25V 0.1U	2	
C419	ECUM1H331JCN	C.CAPACITOR CH 50V 330P	1	
C420	ECUM1H220JCN	C.CAPACITOR CH 50V 22P	1	
C421	ECUM1H680JCN	C.CAPACITOR CH 50V 68P	1	
C422	ECUM1H330JCN	C.CAPACITOR CH 50V 33P	1	
C423	ECEA1AU101	E.CAPACITOR 10V 100U	1	
C424	ECEA1CU100	E.CAPACITOR 16V 10U	1	
C425	ECUM1H221JCN	C.CAPACITOR CH 50V 220P	1	
C426	VCM0044	M.CAPACITOR 130P	1	
C427	VCM0023	M.CAPACITOR 379P	1	
C428	ECUM1H680JCN	C.CAPACITOR CH 50V 68P	1	
C432	ECEA0JU221	E.CAPACITOR 6.3V 220U	1	
C433	ECUM1H050DCN	C.CAPACITOR CH 50V 50P	1	
C434	ECUM1H220JCN	C.CAPACITOR CH 50V 22P	1	
C435	ECUM1H020CCN	C.CAPACITOR CH 50V 2P	1	
C436,37	ECUM1E104ZFN	C.CAPACITOR CH 25V 0.1U	2	
C438	VCM0023	M.CAPACITOR 379P	1	
C439	VCM0057	M.CAPACITOR 169P	1	
C440	ECUM1H470JCN	C.CAPACITOR CH 50V 47P	1	
C441	ECUM1H103KBN	C.CAPACITOR CH 50V 0.01U	1	
C442,43	ECEA1CU221	E.CAPACITOR 16V 220U	2	
C444,45	ECUM1H103KBN	C.CAPACITOR CH 50V 0.01U	2	
C450	ECEA1AU101	E.CAPACITOR 10V 100U	1	
C453	ECUM1E104ZFN	C.CAPACITOR CH 25V 0.1U	1	
C467	ECUM1E104ZFN	C.CAPACITOR CH 25V 0.1U	1	
C468	ECUM1H103KBN	C.CAPACITOR CH 50V 0.01U	1	
C469	ECUM1H220JCN	C.CAPACITOR CH 50V 22P	1	
C701,02	ECUM1H103KBN	C.CAPACITOR CH 50V 0.01U	2	
C703	ECEA1AU101	E.CAPACITOR 10V 100U	1	
C704,05	ECUM1H103KBN	C.CAPACITOR CH 50V 0.01U	2	
C725	ECUM1H180JCN	C.CAPACITOR CH 50V 18P	1	
C726	ECUM1H103KBN	C.CAPACITOR CH 50V 0.01U	1	
C727	ECUM1E104ZFN	C.CAPACITOR CH 25V 0.1U	1	
C728	ECUM1H220JCN	C.CAPACITOR CH 50V 22P	1	
C729	ECUM1H121JCN	C.CAPACITOR CH 50V 120P	1	
C730,31	ECUM1H103KBN	C.CAPACITOR CH 50V 0.01U	2	
C732	ECUM1H101JCN	C.CAPACITOR CH 50V 100P	1	
C733	ECEA1AU101	E.CAPACITOR 10V 100U	1	
C734	ECUM1H331JCN	C.CAPACITOR CH 50V 330P	1	
C735	ECEA1AU101	E.CAPACITOR 10V 100U	1	
C736	ECUM1H103KBN	C.CAPACITOR CH 50V 0.01U	1	
C737	ECUM1H121JCN	C.CAPACITOR CH 50V 120P	1	
C738	ECUM1H103KBN	C.CAPACITOR CH 50V 0.01U	1	
C740-42	ECUM1H103KBN	C.CAPACITOR CH 50V 0.01U	3	
C744	ECUM1E104ZFN	C.CAPACITOR CH 25V 0.1U	1	
C745	ECUM1H103KBN	C.CAPACITOR CH 50V 0.01U	1	
C746	ECUM1E104ZFN	C.CAPACITOR CH 25V 0.1U	1	
C747	ECEA1AU101	E.CAPACITOR 10V 100U	1	
C749	ECUM1H561JCN	C.CAPACITOR CH 50V 560P	1	
C750	ECUM1H331JCN	C.CAPACITOR CH 50V 330P	1	
C751	ECUM1H221JCN	C.CAPACITOR CH 50V 220P	1	
C752	ECUM1H561JCN	C.CAPACITOR CH 50V 560P	1	
C753	ECUM1H390JCN	C.CAPACITOR CH 50V 39P	1	
C754	ECUM1H181JCN	C.CAPACITOR CH 50V 180P	1	
C755	ECUM1H330JCN	C.CAPACITOR CH 50V 33P	1	
C756	ECUM1H101JCN	C.CAPACITOR CH 50V 100P	1	
C757	ECUM1H330JCN	C.CAPACITOR CH 50V 33P	1	
C758	ECUM1H050DCN	C.CAPACITOR CH 50V 50P	1	
C759	ECUM1E104ZFN	C.CAPACITOR CH 25V 0.1U	1	
C760	ECUM1H100DCN	C.CAPACITOR CH 50V 10P	1	
C762	ECUM1H471JCN	C.CAPACITOR CH 50V 470P	1	
C764	ECUM1H680JCN	C.CAPACITOR CH 50V 68P	1	
C765,66	ECUM1H103KBN	C.CAPACITOR CH 50V 0.01U	2	
C767	ECEA1AU101	E.CAPACITOR 10V 100U	1	

Ref.No.	Part No.	Part Name & Description	Pcs	Remarks
C768,69	ECUM1H103KBN	C.CAPACITOR CH 50V 0.01U	2	
C770	ECUM1H220JCN	C.CAPACITOR CH 50V 22P	1	
C771	ECUM1H681JCN	C.CAPACITOR CH 50V 680P	1	
C772	ECUM1E104ZFN	C.CAPACITOR CH 25V 0.1U	1	
C773-75	ECUM1H103KBN	C.CAPACITOR CH 50V 0.01U	3	
C776	ECUM1E104ZFN	C.CAPACITOR CH 25V 0.1U	1	
C777	ECEA1AU101	E.CAPACITOR 10V 100U	1	
C778,79	ECUM1E104ZFN	C.CAPACITOR CH 25V 0.1U	2	
C780,81	ECUM1H470JCN	C.CAPACITOR CH 50V 47P	2	
C782	ECEA1AU471	E.CAPACITOR 10V 470U	1	
C783	ECUM1E104ZFN	C.CAPACITOR CH 25V 0.1U	1	
C784	ECUM1H221JCN	C.CAPACITOR CH 50V 220P	1	
C785	ECEA1AU101	E.CAPACITOR 10V 100U	1	
C786	ECUM1H121JCN	C.CAPACITOR CH 50V 120P	1	
C787	ECUM1H100DCN	C.CAPACITOR CH 50V 10P	1	
C788	ECUM1H331JCN	C.CAPACITOR CH 50V 330P	1	
C789,90	ECUM1E104ZFN	C.CAPACITOR CH 25V 0.1U	2	
C791	ECUM1H331JCN	C.CAPACITOR CH 50V 330P	1	
C792	ECUM1H220JCN	C.CAPACITOR CH 50V 22P	1	
C793	ECUM1H680JCN	C.CAPACITOR CH 50V 68P	1	
C794	ECUM1H330JCN	C.CAPACITOR CH 50V 33P	1	
C796	ECEA1CU100	E.CAPACITOR 16V 10U	1	
C797	VCM0046	M.CAPACITOR 229P	1	
C798	ECUM1H100DCN	C.CAPACITOR CH 50V 10P	1	
C799	ECEA0JU221	E.CAPACITOR 6.3V 220U	1	
C800	ECUM1H050DCN	C.CAPACITOR CH 50V 50P	1	
C801	ECUM1H020CCN	C.CAPACITOR CH 50V 2P	1	
C802	ECUM1H121JCN	C.CAPACITOR CH 50V 120P	1	
C803,04	ECUM1E104ZFN	C.CAPACITOR CH 25V 0.1U	2	
C805	ECUM1H470JCN	C.CAPACITOR CH 50V 47P	1	
C806	VCM0057	M.CAPACITOR 169P	1	
C807	VCM0024	M.CAPACITOR 270P	1	
C808	ECEA1CU221	E.CAPACITOR 16V 220U	1	
C810	ECEA1CU221	E.CAPACITOR 16V 220U	1	
C811,12	ECUM1H103KBN	C.CAPACITOR CH 50V 0.01U	2	
C817	ECEA1AU101	E.CAPACITOR 10V 100U	1	
C818	ECUM1H220JCN	C.CAPACITOR CH 50V 22P	1	
C821	ECUM1E104ZFN	C.CAPACITOR CH 25V 0.1U	1	
D1,D2	MA151K	DIODE	2	
D3	MA151WK	DIODE	1	
D201	MA151WK	DIODE	1	
D301	MA151WK	DIODE	1	
D303	MA151K	DIODE	1	
D305	MA151K	DIODE	1	
D306,07	MA151WK	DIODE	2	
D308,09	MA151WA	DIODE	2	
D701	MA151WK	DIODE	1	
D702,03	MA151K	DIODE	2	
D705	MA151K	DIODE	1	
D706	MA151WK	DIODE	1	
DL301	VLD0191	DELAY	1	
DL701	VLD0191	DELAY	1	
FL1	ELB5F100	FILTER	1	
FL201	ELB5F100	FILTER	1	
FL302	VLF0787	FILTER	1	
FL303	VLF0819	FILTER	1	
FL701	VLF0821	FILTER	1	
IC1	NE5539D	IC	1	
IC2	UPD4053BG	IC	1	
IC3	RC084M	IC	1	
IC4	RC082BM	IC	1	
IC5	AN6306S	IC	1	
IC6	MC14538BF	IC	1	

Refer to the P.C.BOARDS LIST, page 6-1-1, before using this page.

Ref.No.	Part No.	Part Name & Description	Pcs	Remarks
IC7	TC74HC221AF	IC	1	
IC9	AN79N09	IC	1	
IC10	AN79N09	IC	1	
IC11,12	AN79M05F	IC	2	
IC13	AN78M05F	IC	1	
IC14	AN78N05	IC	1	
IC15	AN78N09	IC	1	
IC16	AN78L05	IC	1	
IC17	AN78N09	IC	1	
IC201	NE5539D	IC	1	
IC202	TC74HC221AF	IC	1	
IC203	AN6306S	IC	1	
IC301	AN6308S	IC	1	
IC306	NJM1496M	IC	1	
IC307	UPD4053BG	IC	1	
IC310	AN6308S	IC	1	
IC311-15	10116D	IC	5	
IC316	SN74LS123NS	IC	1	
IC317	MC74HC00AF	IC	1	
IC319	NE5539D	IC	1	
IC326	RC082BM	IC	1	
IC701	AN6308S	IC	1	
IC705	NJM1496M	IC	1	
IC706	UPD4053BG	IC	1	
IC707	AN6308S	IC	1	
IC708-12	10116D	IC	5	
IC716	NE5539D	IC	1	
L1,L2	VLQEL05F101K	COIL 100UH	2	
L4	VLQEL05S151J	COIL 150UH	1	
L5	VLQEL05F101K	COIL 100UH	1	
L6	VLQEL05S1R5J	COIL 1.5UH	1	
L7	VLQEL05F101K	COIL 100UH	1	
L201,02	VLQEL05F101K	COIL 100UH	2	
L204	VLQEL05S561J	COIL 560UH	1	
L205	VLQEL05F101K	COIL 100UH	1	
L206	VLQEL05S4R7J	COIL 4.7UH	1	
L207	VLQEL05S6R8J	COIL 6.8UH	1	
L208	VLQEL05S3R9J	COIL 3.9UH	1	
L209	VLQEL05S390J	COIL 39UH	1	
L210	VLQEL05F101K	COIL 100UH	1	
L212	VLQEL05F101K	COIL 100UH	1	
L301	VLQEL05F101K	COIL 100UH	1	
L302,03	VLQEL05S150J	COIL 15UH	2	
L304	VLQEL05F101K	COIL 100UH	1	
L308	VLQEL05S2R7J	COIL 2.7UH	1	
L309,10	VLQEL05F101K	COIL 100UH	2	
L311	VLQEL05S220J	COIL 22UH	1	
L312	VLQEL05S3R3J	COIL 3.3UH	1	
L313	VLQEL05F101K	COIL 100UH	1	
L318	VLQEL05F101K	COIL 100UH	1	
L320	VLQEL05S2R2J	COIL 2.2UH	1	
L321	VLQEL05S2R7J	COIL 2.7UH	1	
L322	VLQEL05S220J	COIL 22UH	1	
L323	VLQEL05F101K	COIL 100UH	1	
L324	VLQEL05S1R0J	COIL 1UH	1	
L325-27	VLQEL05F101K	COIL 100UH	3	
L328	VLQEL05S470J	COIL 47UH	1	
L329	VLQEL05F101K	COIL 100UH	1	
L333	VLQEL05F101K	COIL 100UH	1	
L334	VLQEL05S6R8J	COIL 6.8UH	1	
L335	VLQEL05F101K	COIL 100UH	1	
L701	VLQEL05F101K	COIL 100UH	1	
L709	VLQEL05S4R7J	COIL 4.7UH	1	
L710	VLQEL05F101K	COIL 100UH	1	
L711	VLQEL05S560J	COIL 56UH	1	
L712	VLQEL05F101K	COIL 100UH	1	
L713	VLQEL05S3R9J	COIL 3.9UH	1	
L715	VLQEL05F101K	COIL 100UH	1	
L716	VLQEL05S181J	COIL 180UH	1	
L717	VLQEL05S680J	COIL 68UH	1	
L718	VLQEL05S3R3J	COIL 3.3UH	1	
L719,20	VLQEL05S8R2J	COIL 8.2UH	2	

Ref.No.	Part No.	Part Name & Description	Pcs	Remarks
L721	VLQEL05S4R7J	COIL 4.7UH	1	
L722	VLQEL05S3R3J	COIL 3.3UH	1	
L723	VLQEL05S330J	COIL 33UH	1	
L724	VLQEL05F101K	COIL 100UH	1	
L725	VLQEL05S1R5J	COIL 1.5UH	1	
L726-28	VLQEL05F101K	COIL 100UH	3	
L729	VLQEL05S150J	COIL 15UH	1	
L731	VLQEL05F101K	COIL 100UH	1	
L732	VLQEL05S6R8J	COIL 6.8UH	1	
L733	VLQEL05F101K	COIL 100UH	1	
Q1	2SD601	TRANSISTOR CHIP	1	(Q,R)
Q2	2SC3757	TRANSISTOR	1	(Q,R)
Q3,Q4	2SA1226	TRANSISTOR	2	
Q5	2SD601	TRANSISTOR CHIP	1	(Q,R)
Q6	2SA1022	TRANSISTOR CHIP	1	(B,C)
Q7	2SC2480	TRANSISTOR	1	
Q8	2SA1462	TRANSISTOR	1	
Q9	2SC2295	TRANSISTOR CHIP	1	(B,C)
Q10	2SA1022	TRANSISTOR CHIP	1	(B,C)
Q14	2SC2295	TRANSISTOR CHIP	1	(B,C)
Q15	2SK374	TRANSISTOR	1	
Q16	2SA1226	TRANSISTOR	1	
Q17	2SC3757	TRANSISTOR	1	(Q,R)
Q18	2SA1226	TRANSISTOR	1	
Q19,20	2SC2295	TRANSISTOR CHIP	2	(B,C)
Q21	UN2213	TRANSISTOR-RESISTOR	1	
Q201	2SD601	TRANSISTOR CHIP	1	(Q,R)
Q205,06	2SC2295	TRANSISTOR CHIP	2	(B,C)
Q207	2SC2480	TRANSISTOR	1	
Q208	2SA1462	TRANSISTOR	1	
Q209	2SC2295	TRANSISTOR CHIP	1	(B,C)
Q210	2SA1022	TRANSISTOR CHIP	1	(B,C)
Q211	2SC2295	TRANSISTOR CHIP	1	(B,C)
Q212	2SA1022	TRANSISTOR CHIP	1	(B,C)
Q213	2SA1226	TRANSISTOR	1	
Q214	2SC2295	TRANSISTOR CHIP	1	(B,C)
Q215	2SC3757	TRANSISTOR	1	(Q,R)
Q216	2SC2295	TRANSISTOR CHIP	1	(B,C)
Q217	2SC3757	TRANSISTOR	1	(Q,R)
Q218	2SA1226	TRANSISTOR	1	
Q219,20	2SC2295	TRANSISTOR CHIP	2	(B,C)
Q301-04	2SC2295	TRANSISTOR CHIP	4	(B,C)
Q313,14	2SC2295	TRANSISTOR CHIP	2	(B,C)
Q315	2SA1022	TRANSISTOR CHIP	1	(B,C)
Q316	2SC2295	TRANSISTOR CHIP	1	(B,C)
Q317,18	2SA1022	TRANSISTOR CHIP	2	(B,C)
Q319	IMX4	TRANSISTOR	1	
Q320	UN2113	TRANSISTOR-RESISTOR	1	
Q324	2SC2295	TRANSISTOR CHIP	1	(B,C)
Q326	2SC2295	TRANSISTOR CHIP	1	(B,C)
Q327	2SA1022	TRANSISTOR CHIP	1	(B,C)
Q329-38	2SC2295	TRANSISTOR CHIP	10	(B,C)
Q339,40	UN2213	TRANSISTOR-RESISTOR	2	
Q341	2SA1462	TRANSISTOR	1	
Q342,43	2SC3757	TRANSISTOR	2	(Q,R)
Q344	2SC2295	TRANSISTOR CHIP	1	(B,C)
Q345	2SA1022	TRANSISTOR CHIP	1	(B,C)
Q346	2SC2480	TRANSISTOR	1	
Q347	2SA1462	TRANSISTOR	1	
Q351	2SK374	TRANSISTOR	1	
Q352	2SC3757	TRANSISTOR	1	(Q,R)
Q353	2SA1226	TRANSISTOR	1	
Q356-61	UN2113	TRANSISTOR-RESISTOR	6	
Q376	2SA1462	TRANSISTOR	1	
Q377	2SA1226	TRANSISTOR	1	
Q378	2SB709	TRANSISTOR CHIP	1	(Q,R)
Q379	2SC2480	TRANSISTOR	1	
Q382-84	2SC3757	TRANSISTOR	3	(Q,R)
Q385	2SC2295	TRANSISTOR CHIP	1	(B,C)
Q386	2SD601	TRANSISTOR CHIP	1	(Q,R)
Q701,02	2SA1022	TRANSISTOR CHIP	2	(B,C)
Q710,11	2SC2295	TRANSISTOR CHIP	2	(B,C)

Refer to the P.C.BOARDS LIST, page 6-1-1, before using this page.

Ref.No.		Part No.	Part Name & Description	Pcs	Remarks
Q712		2SA1022	TRANSISTOR CHIP	1	(B,C)
Q713		2SC2295	TRANSISTOR CHIP	1	(B,C)
Q714,15		2SA1022	TRANSISTOR CHIP	2	(B,C)
Q716		2SC2295	TRANSISTOR CHIP	1	(B,C)
Q718		2SC2295	TRANSISTOR CHIP	1	(B,C)
Q719		2SA1022	TRANSISTOR CHIP	1	(B,C)
Q721-30		2SC2295	TRANSISTOR CHIP	10	(B,C)
Q731		UN2213	TRANSISTOR-RESISTOR	1	
Q732		2SA1462	TRANSISTOR	1	
Q733		2SC2295	TRANSISTOR CHIP	1	(B,C)
Q734		2SA1022	TRANSISTOR CHIP	1	(B,C)
Q735		2SC2480	TRANSISTOR	1	
Q736		2SA1462	TRANSISTOR	1	
Q740		2SK374	TRANSISTOR	1	
Q741		2SC3757	TRANSISTOR	1	(Q,R)
Q742		2SA1226	TRANSISTOR	1	
Q754		2SA1462	TRANSISTOR	1	
Q755		2SA1226	TRANSISTOR	1	
Q756		2SB709	TRANSISTOR CHIP	1	(Q,R)
Q757		2SC2480	TRANSISTOR	1	
Q758-60		2SC3757	TRANSISTOR	3	(Q,R)
Q761		2SD601	TRANSISTOR CHIP	1	(Q,R)
			RESISTORS		
R1		ERJ6GEYJ471	M.RESISTOR CH 1/10W 470	1	
R2		ERJ6GEYJ470	M.RESISTOR CH 1/10W 47	1	
R3		ERJ6GEYJ152	M.RESISTOR CH 1/10W 1.5K	1	
R4,R5		ERJ6GEYG331	M.RESISTOR CH 1/10W 330	2	
R6		ERJ6GEYJ101	M.RESISTOR CH 1/10W 100	1	
R7		ERJ6GEYJ151	M.RESISTOR CH 1/10W 150	1	
R8		ERJ6GEYJ332	M.RESISTOR CH 1/10W 3.3K	1	
R9		ERJ6GEYJ561	M.RESISTOR CH 1/10W 560	1	
R10		ERJ6GEYJ392	M.RESISTOR CH 1/10W 3.9K	1	
R11		ERJ6GEYJ101	M.RESISTOR CH 1/10W 100	1	
R12		ERJ6GEYJ332	M.RESISTOR CH 1/10W 3.3K	1	
R13		ERJ6GEYJ103	M.RESISTOR CH 1/10W 10K	1	
R14,15		ERJ6GEYJ101	M.RESISTOR CH 1/10W 100	2	
R16		ERJ6GEYJ222	M.RESISTOR CH 1/10W 2.2K	1	
R17		ERJ6GEYJ682	M.RESISTOR CH 1/10W 6.8K	1	
R18		ERJ6GEYJ152	M.RESISTOR CH 1/10W 1.5K	1	
R19		ERJ6GEYJ103	M.RESISTOR CH 1/10W 10K	1	
R20		ERJ6GEYJ472	M.RESISTOR CH 1/10W 4.7K	1	
R21		ERJ6GEYJ152	M.RESISTOR CH 1/10W 1.5K	1	
R22		VREO034E152	M.RESISTOR CH 1/10W 1.5K	1	
R23		VREO034E102	M.RESISTOR CH 1/10W 1K	1	
R24		ERJ6GEYJ470	M.RESISTOR CH 1/10W 47	1	
R26		ERJ6GEYJ222	M.RESISTOR CH 1/10W 2.2K	1	
R27		ERJ6GEYG243	M.RESISTOR CH1/10W 24K	1	
R28,29		ERJ6GEYJ221	M.RESISTOR CH 1/10W 220	2	
R30,31		ERJ6GEYJ183	M.RESISTOR CH 1/10W 18K	2	
R32,33		ERJ6GEYJ273	M.RESISTOR CH1/10W 27K	2	
R34		ERJ6GEYJ681	M.RESISTOR CH 1/10W 680	1	
R48		ERJ6GEYJ331	M.RESISTOR CH 1/10W 330	1	
R49		ERJ6GEYJ181	M.RESISTOR CH1/10W 180	1	
R50		ERJ6GEYJ101	M.RESISTOR CH 1/10W 100	1	
R51		ERJ6GEYJ332	M.RESISTOR CH 1/10W 3.3K	1	
R52		ERJ6GEYJ102	M.RESISTOR CH 1/10W 1K	1	
R53		ERJ6GEYJ221	M.RESISTOR CH 1/10W 220	1	
R54		ERJ6GEYK225	M.RESISTOR CH 1/10W 2.2M	1	
R55,56		ERJ6GEYJ101	M.RESISTOR CH 1/10W 100	2	
R57		ERJ6GEYJ222	M.RESISTOR CH 1/10W 2.2K	1	
R58		ERJ6GEYJ105	M.RESISTOR CH 1/10W 1M	1	
R59		ERJ6GEYK225	M.RESISTOR CH 1/10W 2.2M	1	
R60		ERJ6GEYJ472	M.RESISTOR CH 1/10W 4.7K	1	
R61		ERJ6GEYJ682	M.RESISTOR CH 1/10W 6.8K	1	
R62		ERJ6GEYJ103	M.RESISTOR CH 1/10W 10K	1	
R63		ERJ6GEYJ101	M.RESISTOR CH 1/10W 100	1	
R64		ERJ6GEYG243	M.RESISTOR CH1/10W 24K	1	
R65		ERJ6GEYJ103	M.RESISTOR CH 1/10W 10K	1	
R66		ERJ6GEYJ105	M.RESISTOR CH 1/10W 1M	1	
R67		VREO034E27B	M.RESISTOR CH 1/10W 1.87K	1	
R68		ERJ6GEYK5R6	M.RESISTOR CH 1/10W 5.6	1	
R69		VREO034E751	M.RESISTOR CH 1/10W 750	1	

Ref.No.		Part No.	Part Name & Description	Pcs	Remarks
R70		ERJ6GEYJ222	M.RESISTOR CH 1/10W 2.2K	1	
R71		ERJ6GEYJ332	M.RESISTOR CH 1/10W 3.3K	1	
R72		ERJ6GEYJ123	M.RESISTOR CH1/10W 12K	1	
R73,74		ERJ6GEYJ820	M.RESISTOR CH 1/10W 82	2	
R75,76		ERJ6GEYJ154	M.RESISTOR CH1/10W 150K	2	
R77		ERJ6GEYJ332	M.RESISTOR CH 1/10W 3.3K	1	
R78		ERJ6GEYJ470	M.RESISTOR CH 1/10W 47	1	
R79		ERJ6GEYJ331	M.RESISTOR CH 1/10W 330	1	
R80		ERJ6GEYJ151	M.RESISTOR CH 1/10W 150	1	
R81		ERJ6GEYJ102	M.RESISTOR CH 1/10W 1K	1	
R82,83		ERJ6GEYJ470	M.RESISTOR CH 1/10W 47	2	
R84,85		ERJ6GEYJ102	M.RESISTOR CH 1/10W 1K	2	
R86,87		ERJ6GEYJ101	M.RESISTOR CH 1/10W 100	2	
R88		ERJ6GEYJ222	M.RESISTOR CH 1/10W 2.2K	1	
R89		ERJ6GEYJ331	M.RESISTOR CH 1/10W 330	1	
R90		ERJ6GEYJ102	M.RESISTOR CH 1/10W 1K	1	
R92		ERJ6GEYJ101	M.RESISTOR CH 1/10W 100	1	
R93		ERJ6GEYJ470	M.RESISTOR CH 1/10W 47	1	
R94		ERJ6GEYJ473	M.RESISTOR CH 1/10W 47K	1	
R95		ERJ6GEYJ153	M.RESISTOR CH 1/10W 15K	1	
R96		ERJ6GEYJ223	M.RESISTOR CH 1/10W 22K	1	
R97		ERJ6GEYJ153	M.RESISTOR CH 1/10W 15K	1	
R98		ERJ6GEYJ103	M.RESISTOR CH 1/10W 10K	1	
R99		ERJ6GEYJ332	M.RESISTOR CH 1/10W 3.3K	1	
R100		ERJ6GEYJ101	M.RESISTOR CH 1/10W 100	1	
R102		ERJ6GEYG392	M.RESISTOR CH 1/10W 3.9K	1	
R103		VREO034E27B	M.RESISTOR CH 1/10W 1.87K	1	
R104		ERJ6GEYJ333	M.RESISTOR CH 1/10W 33K	1	
R105		ERJ6GEYJ222	M.RESISTOR CH 1/10W 2.2K	1	
R201		ERJ6GEYJ471	M.RESISTOR CH 1/10W 470	1	
R202		ERJ6GEYJ101	M.RESISTOR CH 1/10W 100	1	
R203		ERJ6GEYJ152	M.RESISTOR CH 1/10W 1.5K	1	
R204,05		ERJ6GEYG331	M.RESISTOR CH 1/10W 330	2	
R206		ERJ6GEYJ101	M.RESISTOR CH 1/10W 100	1	
R207		ERJ6GEYJ151	M.RESISTOR CH 1/10W 150	1	
R208		ERJ6GEYJ681	M.RESISTOR CH 1/10W 680	1	
R209		ERJ6GEYJ392	M.RESISTOR CH 1/10W 3.9K	1	
R210		ERJ6GEYJ332	M.RESISTOR CH 1/10W 3.3K	1	
R211		ERJ6GEYJ101	M.RESISTOR CH 1/10W 100	1	
R226		VREO034E152	M.RESISTOR CH 1/10W 1.5K	1	
R227		VREO034E102	M.RESISTOR CH 1/10W 1K	1	
R228		ERJ6GEYJ470	M.RESISTOR CH 1/10W 47	1	
R229		ERJ6GEYJ222	M.RESISTOR CH 1/10W 2.2K	1	
R230		ERJ6GEYJ331	M.RESISTOR CH 1/10W 330	1	
R231		ERJ6GEYJ332	M.RESISTOR CH 1/10W 3.3K	1	
R232		ERJ6GEYJ101	M.RESISTOR CH 1/10W 100	1	
R233		ERJ6GEYJ332	M.RESISTOR CH 1/10W 3.3K	1	
R234		ERJ6GEYG243	M.RESISTOR CH1/10W 24K	1	
R235,36		ERJ6GEYJ221	M.RESISTOR CH 1/10W 220	2	
R237,38		ERJ6GEYJ183	M.RESISTOR CH 1/10W 18K	2	
R239,40		ERJ6GEYJ273	M.RESISTOR CH1/10W 27K	2	
R241		ERJ6GEYJ681	M.RESISTOR CH 1/10W 680	1	
R242		ERJ6GEYJ181	M.RESISTOR CH1/10W 180	1	
R243		ERJ6GEYJ332	M.RESISTOR CH 1/10W 3.3K	1	
R244		ERJ6GEYK475	M.RESISTOR CH 1/10W 4.7M	1	
R245		ERJ6GEYJ181	M.RESISTOR CH1/10W 180	1	
R246		ERJ6GEYJ472	M.RESISTOR CH 1/10W 4.7K	1	
R247		ERJ6GEYJ563	M.RESISTOR CH 1/10W 56K	1	
R248		ERJ6GEYJ153	M.RESISTOR CH 1/10W 15K	1	
R249		VREO034E751	M.RESISTOR CH 1/10W 750	1	
R250		VREO034E27B	M.RESISTOR CH 1/10W 1.87K	1	
R251		ERJ6GEYK5R6	M.RESISTOR CH 1/10W 5.6	1	
R252		ERJ6GEYJ222	M.RESISTOR CH 1/10W 2.2K	1	
R253		ERJ6GEYJ332	M.RESISTOR CH 1/10W 3.3K	1	
R254		ERJ6GEYJ123	M.RESISTOR CH1/10W 12K	1	
R255,56		ERJ6GEYJ680	M.RESISTOR CH 1/10W 68	2	
R257,58		ERJ6GEYJ154	M.RESISTOR CH1/10W 150K	2	
R259		ERJ6GEYJ332	M.RESISTOR CH 1/10W 3.3K	1	
R260		ERJ6GEYJ750	M.RESISTOR CH 1/10W 75	1	
R261		ERJ6GEYJ470	M.RESISTOR CH 1/10W 47	1	
R262		ERJ6GEYJ471	M.RESISTOR CH 1/10W 470	1	
R263		ERJ6GEYJ391	M.RESISTOR CH 1/10W 390	1	
R264		ERJ6GEYG240	M.RESISTOR CH1/10W 24	1	
R265		ERJ6GEYJ471	M.RESISTOR CH 1/10W 470	1	
R266		ERJ6GEYJ470	M.RESISTOR CH 1/10W 47	1	

Refer to the P.C.BOARDS LIST, page 6-1-1, before using this page.

Ref.No.		Part No.	Part Name & Description	Pcs	Remarks
R267		ERJ6GEYJ562	M.RESISTOR CH 1/10W 5.6K	1	
R268		ERJ6GEYJ472	M.RESISTOR CH 1/10W 4.7K	1	
R269,70		ERJ6GEYJ102	M.RESISTOR CH 1/10W 1K	2	
R271		ERJ6GEYJ222	M.RESISTOR CH 1/10W 2.2K	1	
R272		ERJ6GEYJ221	M.RESISTOR CH 1/10W 220	1	
R273		ERJ6GEYJ472	M.RESISTOR CH 1/10W 4.7K	1	
R274		ERJ6GEYJ470	M.RESISTOR CH 1/10W 47	1	
R275		ERJ6GEYJ682	M.RESISTOR CH 1/10W 6.8K	1	
R276		ERJ6GEYJ332	M.RESISTOR CH 1/10W 3.3K	1	
R277		ERJ6GEYJ222	M.RESISTOR CH 1/10W 2.2K	1	
R279,80		ERJ6GEYJ470	M.RESISTOR CH 1/10W 47	2	
R281		ERJ6GEYJ222	M.RESISTOR CH 1/10W 2.2K	1	
R282,83		ERJ6GEYJ101	M.RESISTOR CH 1/10W 100	2	
R284		ERJ6GEYJ472	M.RESISTOR CH 1/10W 4.7K	1	
R285		ERJ6GEYJ222	M.RESISTOR CH 1/10W 2.2K	1	
R286		ERJ6GEYJ331	M.RESISTOR CH 1/10W 330	1	
R287		ERJ6GEYJ102	M.RESISTOR CH 1/10W 1K	1	
R288		ERJ6GEYJ470	M.RESISTOR CH 1/10W 47	1	
R289		ERJ6GEYJ101	M.RESISTOR CH 1/10W 100	1	
R290		ERJ6GEYJ153	M.RESISTOR CH 1/10W 15K	1	
R291		ERJ6GEYJ222	M.RESISTOR CH 1/10W 2.2K	1	
R292		ERJ6GEY0R00	M.RESISTOR CH 1/10W 0	1	
R293		ERJ6GEYJ222	M.RESISTOR CH 1/10W 2.2K	1	
R301		ERJ6GEYJ470	M.RESISTOR CH 1/10W 47	1	
R302		ERJ6GEYJ681	M.RESISTOR CH 1/10W 680	1	
R303		ERJ6GEYJ102	M.RESISTOR CH 1/10W 1K	1	
R304		ERJ6GEYJ332	M.RESISTOR CH 1/10W 3.3K	1	
R305		ERJ6GEYJ470	M.RESISTOR CH 1/10W 47	1	
R306		ERJ6GEYJ681	M.RESISTOR CH 1/10W 680	1	
R307		ERJ6GEYJ102	M.RESISTOR CH 1/10W 1K	1	
R308		ERJ6GEYJ332	M.RESISTOR CH 1/10W 3.3K	1	
R309		ERJ6GEYJ222	M.RESISTOR CH 1/10W 2.2K	1	
R310		ERJ6GEYJ470	M.RESISTOR CH 1/10W 47	1	
R332		ERJ6GEYJ152	M.RESISTOR CH 1/10W 1.5K	1	
R333,34		ERJ6GEYG471	M.RESISTOR CH 1/10W 470	2	
R335,36		ERJ6GEYJ470	M.RESISTOR CH 1/10W 47	2	
R337,38		ERJ6GEYJ222	M.RESISTOR CH 1/10W 2.2K	2	
R339,40		ERJ6GEYJ271	M.RESISTOR CH 1/10W 270	2	
R341		ERJ6GEYJ470	M.RESISTOR CH 1/10W 47	1	
R342		ERJ6GEYJ271	M.RESISTOR CH 1/10W 270	1	
R343		ERJ6GEYJ821	M.RESISTOR CH 1/10W 820	1	
R344		ERJ6GEYJ470	M.RESISTOR CH 1/10W 47	1	
R345		ERJ6GEYJ222	M.RESISTOR CH 1/10W 2.2K	1	
R346		ERJ6GEYJ102	M.RESISTOR CH 1/10W 1K	1	
R347		ERJ6GEYG331	M.RESISTOR CH 1/10W 330	1	
R348		ERJ6GEYJ153	M.RESISTOR CH 1/10W 15K	1	
R349		ERJ6GEYJ333	M.RESISTOR CH 1/10W 33K	1	
R350,51		ERJ6GEYJ220	M.RESISTOR CH1/10W 22	2	
R352		ERJ6GEYJ470	M.RESISTOR CH 1/10W 47	1	
R353		ERJ6GEYJ152	M.RESISTOR CH 1/10W 1.5K	1	
R354		ERJ6GEYJ221	M.RESISTOR CH 1/10W 220	1	
R355		ERJ6GEYJ102	M.RESISTOR CH 1/10W 1K	1	
R356		ERJ6GEYJ221	M.RESISTOR CH 1/10W 220	1	
R357		ERJ6GEYJ222	M.RESISTOR CH 1/10W 2.2K	1	
R358		ERJ6GEYJ101	M.RESISTOR CH 1/10W 100	1	
R359		ERJ6GEYJ472	M.RESISTOR CH 1/10W 4.7K	1	
R360,61		ERJ6GEYJ473	M.RESISTOR CH 1/10W 47K	2	
R362		ERJ6GEYJ472	M.RESISTOR CH 1/10W 4.7K	1	
R363		ERJ6GEYJ223	M.RESISTOR CH 1/10W 22K	1	
R364		ERJ6GEYJ273	M.RESISTOR CH1/10W 27K	1	
R365		ERJ6GEYJ473	M.RESISTOR CH 1/10W 47K	1	
R366		ERJ6GEYJ223	M.RESISTOR CH 1/10W 22K	1	
R367		ERJ6GEYJ104	M.RESISTOR CH 1/10W 100K	1	
R368		ERJ6GEYJ472	M.RESISTOR CH 1/10W 4.7K	1	
R369		ERJ6GEYJ103	M.RESISTOR CH 1/10W 10K	1	
R370		ERJ6GEYJ223	M.RESISTOR CH 1/10W 22K	1	
R371		ERJ6GEYJ682	M.RESISTOR CH 1/10W 6.8K	1	
R394		ERJ6GEYJ471	M.RESISTOR CH 1/10W 470	1	
R395		ERJ6GEYJ101	M.RESISTOR CH 1/10W 100	1	
R396		ERJ6GEYJ222	M.RESISTOR CH 1/10W 2.2K	1	
R397		ERJ6GEYJ470	M.RESISTOR CH 1/10W 47	1	
R398		ERJ6GEYJ152	M.RESISTOR CH 1/10W 1.5K	1	
R399,00		ERJ6GEYG301	M.RESISTOR CH 1/10W 300	2	
R401		ERJ6GEYJ470	M.RESISTOR CH 1/10W 47	1	
R402		ERJ6GEYJ102	M.RESISTOR CH 1/10W 1K	1	

Ref.No.		Part No.	Part Name & Description	Pcs	Remarks
R403		ERJ6GEYJ681	M.RESISTOR CH 1/10W 680	1	
R404		ERJ6GEYJ102	M.RESISTOR CH 1/10W 1K	1	
R405		ERJ6GEYJ152	M.RESISTOR CH 1/10W 1.5K	1	
R406		ERJ6GEYJ470	M.RESISTOR CH 1/10W 47	1	
R407		ERJ6GEYJ221	M.RESISTOR CH 1/10W 220	1	
R408		ERJ6GEYJ222	M.RESISTOR CH 1/10W 2.2K	1	
R409		ERJ6GEYJ470	M.RESISTOR CH 1/10W 47	1	
R410		ERJ6GEYJ152	M.RESISTOR CH 1/10W 1.5K	1	
R411,12		ERJ6GEYJ331	M.RESISTOR CH 1/10W 330	2	
R413		ERJ6GEYJ470	M.RESISTOR CH 1/10W 47	1	
R414		ERJ6GEYJ222	M.RESISTOR CH 1/10W 2.2K	1	
R415		ERJ6GEYJ470	M.RESISTOR CH 1/10W 47	1	
R426		ERJ6GEYJ470	M.RESISTOR CH 1/10W 47	1	
R427-34		ERJ6GEYJ102	M.RESISTOR CH 1/10W 1K	8	
R435,36		ERJ6GEYJ332	M.RESISTOR CH 1/10W 3.3K	2	
R437		ERJ6GEYJ101	M.RESISTOR CH 1/10W 100	1	
R438,39		ERJ6GEYJ471	M.RESISTOR CH 1/10W 470	2	
R440		ERJ6GEYJ470	M.RESISTOR CH 1/10W 47	1	
R441,42		ERJ6GEYJ681	M.RESISTOR CH 1/10W 680	2	
R443,44		ERJ6GEYJ101	M.RESISTOR CH 1/10W 100	2	
R445		ERJ6GEYJ470	M.RESISTOR CH 1/10W 47	1	
R446		ERJ6GEYJ151	M.RESISTOR CH 1/10W 150	1	
R447,48		ERJ6GEYJ222	M.RESISTOR CH 1/10W 2.2K	2	
R449		ERJ6GEYJ470	M.RESISTOR CH 1/10W 47	1	
R450,51		ERJ6GEYJ222	M.RESISTOR CH 1/10W 2.2K	2	
R452,53		ERJ6GEYJ470	M.RESISTOR CH 1/10W 47	2	
R454-65		ERJ6GEYJ102	M.RESISTOR CH 1/10W 1K	12	
R466		ERJ6GEYJ683	M.RESISTOR CH 1/10W 68K	1	
R467,68		ERJ6GEYJ103	M.RESISTOR CH 1/10W 10K	2	
R469,70		ERJ6GEYJ150	M.RESISTOR CH 1/10W 15	2	
R471,72		ERJ6GEYJ332	M.RESISTOR CH 1/10W 3.3K	2	
R473		ERJ6GEYJ101	M.RESISTOR CH 1/10W 100	1	
R474		ERDS2TJ222	C.RESISTOR 1/4W 2.2K	1	
R475		ERJ6GEYJ102	M.RESISTOR CH 1/10W 1K	1	
R476		ERJ6GEYJ471	M.RESISTOR CH 1/10W 470	1	
R478		ERJ6GEYJ102	M.RESISTOR CH 1/10W 1K	1	
R479		ERJ6GEYJ222	M.RESISTOR CH 1/10W 2.2K	1	
R480,81		ERJ6GEYJ471	M.RESISTOR CH 1/10W 470	2	
R482		ERJ6GEYJ470	M.RESISTOR CH 1/10W 47	1	
R483,84		ERJ6GEYJ333	M.RESISTOR CH 1/10W 33K	2	
R485,86		ERJ6GEYJ102	M.RESISTOR CH 1/10W 1K	2	
R487		ERJ6GEYJ222	M.RESISTOR CH 1/10W 2.2K	1	
R488		ERJ6GEYJ221	M.RESISTOR CH 1/10W 220	1	
R489		ERJ6GEYJ392	M.RESISTOR CH 1/10W 3.9K	1	
R490		ERJ6GEYJ470	M.RESISTOR CH 1/10W 47	1	
R491		ERJ6GEYJ333	M.RESISTOR CH 1/10W 33K	1	
R492		ERJ6GEYJ471	M.RESISTOR CH 1/10W 470	1	
R493		ERJ6GEYJ152	M.RESISTOR CH 1/10W 1.5K	1	
R494,95		ERJ6GEYJ101	M.RESISTOR CH 1/10W 100	2	
R496		ERJ6GEYJ222	M.RESISTOR CH 1/10W 2.2K	1	
R497		ERJ6GEYJ102	M.RESISTOR CH 1/10W 1K	1	
R498		ERJ6GEYJ101	M.RESISTOR CH 1/10W 100	1	
R499		ERJ6GEYJ332	M.RESISTOR CH 1/10W 3.3K	1	
R500		ERJ6GEYJ223	M.RESISTOR CH 1/10W 22K	1	
R501		ERJ6GEYJ332	M.RESISTOR CH 1/10W 3.3K	1	
R502		ERJ6GEYJ472	M.RESISTOR CH 1/10W 4.7K	1	
R503		ERJ6GEYJ103	M.RESISTOR CH 1/10W 10K	1	
R504		ERJ6GEYJ683	M.RESISTOR CH 1/10W 68K	1	
R505,06		ERJ6GEYJ473	M.RESISTOR CH 1/10W 47K	2	
R507		ERJ6GEYJ471	M.RESISTOR CH 1/10W 470	1	
R509		ERJ6GEYJ221	M.RESISTOR CH 1/10W 220	1	
R510		ERJ6GEYJ392	M.RESISTOR CH 1/10W 3.9K	1	
R511		VRE0034E27B	M.RESISTOR CH 1/10W 1.87K	1	
R512		VRE0034E751	M.RESISTOR CH 1/10W 750	1	
R513		ERJ6GEYJ332	M.RESISTOR CH 1/10W 3.3K	1	
R514		ERJ6GEYJ152	M.RESISTOR CH 1/10W 1.5K	1	
R515		ERJ6GEYJ682	M.RESISTOR CH 1/10W 6.8K	1	
R516		ERJ6GEYG301	M.RESISTOR CH 1/10W 300	1	
R517		ERJ6GEY0R00	M.RESISTOR CH 1/10W 0	1	
R518		ERJ6GEYG471	M.RESISTOR CH 1/10W 470	1	
R519		ERJ6GEYJ332	M.RESISTOR CH 1/10W 3.3K	1	
R520		ERJ6GEYJ101	M.RESISTOR CH 1/10W 100	1	
R521		ERJ6GEYJ151	M.RESISTOR CH 1/10W 150	1	
R522		VRE0034E26A	M.RESISTOR CH 1/10W 182	1	
R523		ERJ6GEYJ102	M.RESISTOR CH 1/10W 1K	1	

Refer to the P.C.BOARDS LIST, page 6-1-1, before using this page.

Ref.No.		Part No.	Part Name & Description	Pcs	Remarks
R524		VRE0034E89A	M.RESISTOR CH 1/10W 825	1	
R525		VRE0034E21B	M.RESISTOR CH 1/10W 1.62K	1	
R526,27		ERJ6GEYJ470	M.RESISTOR CH 1/10W 47	2	
R528		ERJ6GEYJ101	M.RESISTOR CH 1/10W 100	1	
R529		ERJ6GEYJ102	M.RESISTOR CH 1/10W 1K	1	
R530		ERJ6GEYJ681	M.RESISTOR CH 1/10W 680	1	
R531,32		ERJ6GEYJ273	M.RESISTOR CH1/10W 27K	2	
R533,34		ERJ6GEYJ183	M.RESISTOR CH 1/10W 18K	2	
R535,36		ERJ6GEYJ221	M.RESISTOR CH 1/10W 220	2	
R537		ERJ6GEYG243	M.RESISTOR CH1/10W 24K	1	
R549		ERJ6GEYJ470	M.RESISTOR CH 1/10W 47	1	
R550		ERJ6GEYJ472	M.RESISTOR CH 1/10W 4.7K	1	
R551		ERJ6GEYJ473	M.RESISTOR CH 1/10W 47K	1	
R552		ERJ6GEYJ332	M.RESISTOR CH 1/10W 3.3K	1	
R553		ERJ6GEYJ471	M.RESISTOR CH 1/10W 470	1	
R554		ERJ6GEYJ102	M.RESISTOR CH 1/10W 1K	1	
R555		ERJ6GEYJ472	M.RESISTOR CH 1/10W 4.7K	1	
R556		ERJ6GEYJ122	M.RESISTOR CH1/10W 1.2K	1	
R561-63		ERJ6GEYJ473	M.RESISTOR CH 1/10W 47K	3	
R564		ERJ6GEYJ222	M.RESISTOR CH 1/10W 2.2K	1	
R565		ERJ6GEYJ223	M.RESISTOR CH 1/10W 22K	1	
R566		ERJ6GEYJ222	M.RESISTOR CH 1/10W 2.2K	1	
R567		ERJ6GEYJ223	M.RESISTOR CH 1/10W 22K	1	
R620		ERJ6GEYJ101	M.RESISTOR CH 1/10W 100	1	
R624-26		ERJ6GEYJ103	M.RESISTOR CH 1/10W 10K	3	
R627		ERJ6GEYJ472	M.RESISTOR CH 1/10W 4.7K	1	
R628		ERJ6GEYJ223	M.RESISTOR CH 1/10W 22K	1	
R629		ERJ6GEYJ472	M.RESISTOR CH 1/10W 4.7K	1	
R630,31		ERJ6GEYJ101	M.RESISTOR CH 1/10W 100	2	
R633		ERDS2TJ331	C.RESISTOR 1/4W 330	1	
R636		ERJ6GEYJ470	M.RESISTOR CH 1/10W 47	1	
R637		ERJ6GEYJ102	M.RESISTOR CH 1/10W 1K	1	
R639,40		ERJ6GEYJ331	M.RESISTOR CH 1/10W 330	2	
R643		ERJ6GEYJ331	M.RESISTOR CH 1/10W 330	1	
R644		ERJ6GEYJ470	M.RESISTOR CH 1/10W 47	1	
R648		ERJ6GEYJ102	M.RESISTOR CH 1/10W 1K	1	
R649		ERJ6GEYJ471	M.RESISTOR CH 1/10W 470	1	
R650,51		ERJ6GEYJ470	M.RESISTOR CH 1/10W 47	2	
R656		ERJ6GEYJ470	M.RESISTOR CH 1/10W 47	1	
R658,59		ERJ6GEYJ470	M.RESISTOR CH 1/10W 47	2	
R701		ERJ6GEYJ470	M.RESISTOR CH 1/10W 47	1	
R702		ERJ6GEYJ102	M.RESISTOR CH 1/10W 1K	1	
R703		ERJ6GEYJ821	M.RESISTOR CH 1/10W 820	1	
R704		ERJ6GEY0R00	M.RESISTOR CH 1/10W 0	1	
R705		ERJ6GEYJ332	M.RESISTOR CH 1/10W 3.3K	1	
R712		ERJ6GEYJ470	M.RESISTOR CH 1/10W 47	1	
R723,24		ERJ6GEYJ101	M.RESISTOR CH 1/10W 100	2	
R725		ERJ6GEYJ102	M.RESISTOR CH 1/10W 1K	1	
R726		ERJ6GEYJ470	M.RESISTOR CH 1/10W 47	1	
R727		ERJ6GEYG471	M.RESISTOR CH 1/10W 470	1	
R728,29		ERJ6GEYJ470	M.RESISTOR CH 1/10W 47	2	
R730		ERJ6GEYG471	M.RESISTOR CH 1/10W 470	1	
R731		ERJ6GEYJ222	M.RESISTOR CH 1/10W 2.2K	1	
R732,33		ERJ6GEYG391	M.RESISTOR CH 1/10W 390	2	
R734		ERJ6GEYJ222	M.RESISTOR CH 1/10W 2.2K	1	
R735		ERJ6GEYJ470	M.RESISTOR CH 1/10W 47	1	
R736		ERJ6GEYJ271	M.RESISTOR CH 1/10W 270	1	
R737		ERJ6GEYJ102	M.RESISTOR CH 1/10W 1K	1	
R738		ERJ6GEYJ821	M.RESISTOR CH 1/10W 820	1	
R739		ERJ6GEYJ470	M.RESISTOR CH 1/10W 47	1	
R740		ERJ6GEYJ222	M.RESISTOR CH 1/10W 2.2K	1	
R741		ERJ6GEYJ102	M.RESISTOR CH 1/10W 1K	1	
R742		ERJ6GEYG331	M.RESISTOR CH 1/10W 330	1	
R743		ERJ6GEYJ153	M.RESISTOR CH 1/10W 15K	1	
R744		ERJ6GEYJ473	M.RESISTOR CH 1/10W 47K	1	
R745,46		ERJ6GEYJ220	M.RESISTOR CH1/10W 22	2	
R747		ERJ6GEYJ470	M.RESISTOR CH 1/10W 47	1	
R748		ERJ6GEYJ152	M.RESISTOR CH 1/10W 1.5K	1	
R749		ERJ6GEYJ221	M.RESISTOR CH 1/10W 220	1	
R750		ERJ6GEYJ102	M.RESISTOR CH 1/10W 1K	1	
R751		ERJ6GEYJ221	M.RESISTOR CH 1/10W 220	1	
R752		ERJ6GEYJ222	M.RESISTOR CH 1/10W 2.2K	1	
R753		ERJ6GEYJ472	M.RESISTOR CH 1/10W 4.7K	1	
R754		ERJ6GEYJ103	M.RESISTOR CH 1/10W 10K	1	
R755		ERJ6GEYJ472	M.RESISTOR CH 1/10W 4.7K	1	

Ref.No.		Part No.	Part Name & Description	Pcs	Remarks
R756		ERJ6GEYJ682	M.RESISTOR CH 1/10W 6.8K	1	
R757		ERJ6GEYJ471	M.RESISTOR CH 1/10W 470	1	
R758		ERJ6GEYJ101	M.RESISTOR CH 1/10W 100	1	
R759		ERJ6GEYJ222	M.RESISTOR CH 1/10W 2.2K	1	
R760		ERJ6GEYJ470	M.RESISTOR CH 1/10W 47	1	
R761		ERJ6GEYJ152	M.RESISTOR CH 1/10W 1.5K	1	
R762,63		ERJ6GEYG301	M.RESISTOR CH 1/10W 300	2	
R764		ERJ6GEYJ470	M.RESISTOR CH 1/10W 47	1	
R765		ERJ6GEYJ102	M.RESISTOR CH 1/10W 1K	1	
R766		ERJ6GEYJ681	M.RESISTOR CH 1/10W 680	1	
R767		ERJ6GEYJ102	M.RESISTOR CH 1/10W 1K	1	
R768		ERJ6GEYJ152	M.RESISTOR CH 1/10W 1.5K	1	
R769		ERJ6GEYJ470	M.RESISTOR CH 1/10W 47	1	
R770		ERJ6GEYJ221	M.RESISTOR CH 1/10W 220	1	
R771		ERJ6GEYJ222	M.RESISTOR CH 1/10W 2.2K	1	
R772		ERJ6GEYJ470	M.RESISTOR CH 1/10W 47	1	
R773		ERJ6GEYJ152	M.RESISTOR CH 1/10W 1.5K	1	
R774,75		ERJ6GEYJ331	M.RESISTOR CH 1/10W 330	2	
R776		ERJ6GEYJ470	M.RESISTOR CH 1/10W 47	1	
R777		ERJ6GEYJ222	M.RESISTOR CH 1/10W 2.2K	1	
R778		ERJ6GEYJ470	M.RESISTOR CH 1/10W 47	1	
R789		ERJ6GEYJ470	M.RESISTOR CH 1/10W 47	1	
R790-97		ERJ6GEYJ102	M.RESISTOR CH 1/10W 1K	8	
R798,99		ERJ6GEYJ332	M.RESISTOR CH 1/10W 3.3K	2	
R800		ERJ6GEYJ101	M.RESISTOR CH 1/10W 100	1	
R801,02		ERJ6GEYJ471	M.RESISTOR CH 1/10W 470	2	
R803		ERJ6GEYJ470	M.RESISTOR CH 1/10W 47	1	
R804,05		ERJ6GEYJ681	M.RESISTOR CH 1/10W 680	2	
R806,07		ERJ6GEYJ101	M.RESISTOR CH 1/10W 100	2	
R808		ERJ6GEYJ470	M.RESISTOR CH 1/10W 47	1	
R809		ERJ6GEYJ151	M.RESISTOR CH 1/10W 150	1	
R810,11		ERJ6GEYJ222	M.RESISTOR CH 1/10W 2.2K	2	
R812		ERJ6GEYJ470	M.RESISTOR CH 1/10W 47	1	
R813,14		ERJ6GEYJ222	M.RESISTOR CH 1/10W 2.2K	2	
R815,16		ERJ6GEYJ470	M.RESISTOR CH 1/10W 47	2	
R817-28		ERJ6GEYJ102	M.RESISTOR CH 1/10W 1K	12	
R829		ERJ6GEYJ683	M.RESISTOR CH 1/10W 68K	1	
R830,31		ERJ6GEYJ103	M.RESISTOR CH 1/10W 10K	2	
R832,33		ERJ6GEYJ150	M.RESISTOR CH 1/10W 15	2	
R834,35		ERJ6GEYJ332	M.RESISTOR CH 1/10W 3.3K	2	
R836		ERJ6GEYJ101	M.RESISTOR CH 1/10W 100	1	
R837		ERDS2TJ222	C.RESISTOR 1/4W 2.2K	1	
R838-40		ERJ6GEYJ102	M.RESISTOR CH 1/10W 1K	3	
R841		ERJ6GEYJ471	M.RESISTOR CH 1/10W 470	1	
R842		ERJ6GEYJ222	M.RESISTOR CH 1/10W 2.2K	1	
R843,44		ERJ6GEYJ471	M.RESISTOR CH 1/10W 470	2	
R845		ERJ6GEYJ470	M.RESISTOR CH 1/10W 47	1	
R846,47		ERJ6GEYJ333	M.RESISTOR CH 1/10W 33K	2	
R848,49		ERJ6GEYJ102	M.RESISTOR CH 1/10W 1K	2	
R850		ERJ6GEYJ222	M.RESISTOR CH 1/10W 2.2K	1	
R851		ERJ6GEYJ221	M.RESISTOR CH 1/10W 220	1	
R852		ERJ6GEYJ392	M.RESISTOR CH 1/10W 3.9K	1	
R853		ERJ6GEYJ470	M.RESISTOR CH 1/10W 47	1	
R854		ERJ6GEYJ471	M.RESISTOR CH 1/10W 470	1	
R855		ERJ6GEYJ152	M.RESISTOR CH 1/10W 1.5K	1	
R856,57		ERJ6GEYJ101	M.RESISTOR CH 1/10W 100	2	
R858		ERJ6GEYJ222	M.RESISTOR CH 1/10W 2.2K	1	
R859		ERJ6GEYJ102	M.RESISTOR CH 1/10W 1K	1	
R860		ERJ6GEYJ101	M.RESISTOR CH 1/10W 100	1	
R861		ERJ6GEYJ332	M.RESISTOR CH 1/10W 3.3K	1	
R862		ERJ6GEYJ223	M.RESISTOR CH 1/10W 22K	1	
R863		ERJ6GEYJ332	M.RESISTOR CH 1/10W 3.3K	1	
R864		ERJ6GEYJ472	M.RESISTOR CH 1/10W 4.7K	1	
R865		ERJ6GEYJ103	M.RESISTOR CH 1/10W 10K	1	
R866		ERJ6GEYJ683	M.RESISTOR CH 1/10W 68K	1	
R867		ERJ6GEYJ473	M.RESISTOR CH 1/10W 47K	1	
R869		ERJ6GEYJ471	M.RESISTOR CH 1/10W 470	1	
R871		ERJ6GEYJ221	M.RESISTOR CH 1/10W 220	1	
R872		ERJ6GEYJ392	M.RESISTOR CH 1/10W 3.9K	1	
R873		VRE0034E27B	M.RESISTOR CH 1/10W 1.87K	1	
R874		VRE0034E751	M.RESISTOR CH 1/10W 750	1	
R875		ERJ6GEYJ332	M.RESISTOR CH 1/10W 3.3K	1	
R876		ERJ6GEYJ152	M.RESISTOR CH 1/10W 1.5K	1	
R877		ERJ6GEYJ102	M.RESISTOR CH 1/10W 1K	1	
R878		ERJ6GEYG301	M.RESISTOR CH 1/10W 300	1	

Refer to the P.C.BOARDS LIST, page 6-1-1, before using this page.

Ref.No.		Part No.	Part Name & Description	Pcs	Remarks
R879		ERJ6GEYG471	M.RESISTOR CH 1/10W 470	1	
R880		ERJ6GEYJ332	M.RESISTOR CH 1/10W 3.3K	1	
R881		ERJ6GEYJ101	M.RESISTOR CH 1/10W 100	1	
R882		ERJ6GEYJ151	M.RESISTOR CH 1/10W 150	1	
R883		VRE0034E26A	M.RESISTOR CH 1/10W 182	1	
R884		ERJ6GEYJ331	M.RESISTOR CH 1/10W 330	1	
R885		VRE0034E89A	M.RESISTOR CH 1/10W 825	1	
R886,87		ERJ6GEYJ470	M.RESISTOR CH 1/10W 47	2	
R888		VRE0034E21B	M.RESISTOR CH 1/10W 1.62K	1	
R889		ERJ6GEYJ681	M.RESISTOR CH 1/10W 680	1	
R890		ERJ6GEYJ273	M.RESISTOR CH1/10W 27K	1	
R891		ERJ6GEYJ183	M.RESISTOR CH 1/10W 18K	1	
R892		ERJ6GEYJ221	M.RESISTOR CH 1/10W 220	1	
R893		ERJ6GEYJ273	M.RESISTOR CH1/10W 27K	1	
R894		ERJ6GEYJ183	M.RESISTOR CH 1/10W 18K	1	
R895		ERJ6GEYJ221	M.RESISTOR CH 1/10W 220	1	
R896		ERJ6GEYG243	M.RESISTOR CH1/10W 24K	1	
R908		ERJ6GEYJ470	M.RESISTOR CH 1/10W 47	1	
R909		ERJ6GEYJ472	M.RESISTOR CH 1/10W 4.7K	1	
R910		ERJ6GEYJ473	M.RESISTOR CH 1/10W 47K	1	
R911		ERJ6GEYJ332	M.RESISTOR CH 1/10W 3.3K	1	
R912		ERJ6GEYJ471	M.RESISTOR CH 1/10W 470	1	
R913		ERJ6GEYJ102	M.RESISTOR CH 1/10W 1K	1	
R914		ERJ6GEYJ472	M.RESISTOR CH 1/10W 4.7K	1	
R915		ERJ6GEYJ122	M.RESISTOR CH1/10W 1.2K	1	
R964		ERJ6GEYJ101	M.RESISTOR CH 1/10W 100	1	
R965		ERJ6GEYJ102	M.RESISTOR CH 1/10W 1K	1	
R966-68		ERJ6GEYJ103	M.RESISTOR CH 1/10W 10K	3	
R969,70		ERJ6GEYJ472	M.RESISTOR CH 1/10W 4.7K	2	
R971		ERJ6GEYJ223	M.RESISTOR CH 1/10W 22K	1	
R972		ERDS2TJ331	C.RESISTOR 1/4W 330	1	
R975		ERJ6GEYJ470	M.RESISTOR CH 1/10W 47	1	
R979		ERJ6GEYJ102	M.RESISTOR CH 1/10W 1K	1	
R980		ERJ6GEYJ471	M.RESISTOR CH 1/10W 470	1	
R985		ERJ6GEYJ470	M.RESISTOR CH 1/10W 47	1	
R986		ERJ6GEYJ331	M.RESISTOR CH 1/10W 330	1	
R989		ERJ6GEYJ472	M.RESISTOR CH 1/10W 4.7K	1	
R990		ERJ6GEYJ470	M.RESISTOR CH 1/10W 47	1	
SW1		VSS0126	SWITCH	1	
SW201,02		VSS0126	SWITCH	2	
SW304		VSS0126	SWITCH	1	
SW704		VSS0126	SWITCH	1	
TP1		VJR0582	PACK PIN	1	
TP3		VJR0582	PACK PIN	1	
TP5-P8		VJR0582	PACK PIN	4	
TP201		VJR0582	PACK PIN	1	
TP203-07		VJR0582	PACK PIN	5	
TP301,02		VJR0582	PACK PIN	2	
TP304		VJR0582	PACK PIN	1	
TP307-11		VJR0582	PACK PIN	5	
TP315-17		VJR0582	PACK PIN	3	
TP701-08		VJR0582	PACK PIN	8	
TP711		VJR0582	PACK PIN	1	
TPG1,G2		VJR0582	PACK PIN	2	
TPG201,02		VJR0582	PACK PIN	2	
TPG301-03		VJR0582	PACK PIN	3	
TPG701-03		VJR0582	PACK PIN	3	
VC301		ECV1ZW10X53T	V.CAPACITOR 10P	1	
VC302		ECV1ZW20X53T	V.CAPACITOR 20P	1	
VC701		ECV1ZW20X53T	V.CAPACITOR 20P	1	
VL201		EIR7QF015B	COIL	1	
VL301		EIR7QF016B	COIL	1	
VL701		EIR7QF016B	COIL	1	

Ref.No.		Part No.	Part Name & Description	Pcs	Remarks
VL702		EIR7QF015B	COIL	1	
VR1		VRV0064B501	V.RESISTOR 500	1	
VR3		VRV0109B202	V.RESISTOR 2K	1	
VR4		VRV0109B102	V.RESISTOR 1K	1	
VR5		VRV0109B203	V.RESISTOR 20K	1	
VR6		VRV0109B501	V.RESISTOR 500	1	
VR7		VRV0064B103	V.RESISTOR 10K	1	
VR8		VRV0109B503	V.RESISTOR 50K	1	
VR9		VRV0109B502	V.RESISTOR 5K	1	
VR10		VRV0109B503	V.RESISTOR 50K	1	
VR11		VRV0109B104	V.RESISTOR 100K	1	
VR201		VRV0064B501	V.RESISTOR 500	1	
VR202		VRV0109B203	V.RESISTOR 20K	1	
VR203		VRV0109B102	V.RESISTOR 1K	1	
VR204		VRV0109B501	V.RESISTOR 500	1	
VR205		VRV0109B503	V.RESISTOR 50K	1	
VR206		VRV0109B502	V.RESISTOR 5K	1	
VR207,08		VRV0109B503	V.RESISTOR 50K	2	
VR209		VRV0109B104	V.RESISTOR 100K	1	
VR301		VRV0109B501	V.RESISTOR 500	1	
VR302		VRV0109B102	V.RESISTOR 1K	1	
VR303		VRV0109B501	V.RESISTOR 500	1	
VR304		VRV0109B102	V.RESISTOR 1K	1	
VR309		VRV0109B101	V.RESISTOR 100	1	
VR310		VRV0109B502	V.RESISTOR 5K	1	
VR311		VRV0109B501	V.RESISTOR 500	1	
VR312		VRV0064B104	V.RESISTOR 100K	1	
VR315,16		VRV0064B502	V.RESISTOR 5K	2	
VR317		VRV0109B501	V.RESISTOR 500	1	
VR318		VRV0109B203	V.RESISTOR 20K	1	
VR319,20		VRV0109B102	V.RESISTOR 1K	2	
VR321		VRV0109B203	V.RESISTOR 20K	1	
VR322		VRV0109B102	V.RESISTOR 1K	1	
VR323		VRV0109B203	V.RESISTOR 20K	1	
VR324		VRV0109B102	V.RESISTOR 1K	1	
VR701,02		VRV0109B501	V.RESISTOR 500	2	
VR712,13		VRV0064B502	V.RESISTOR 5K	2	
VR714		VRV0109B501	V.RESISTOR 500	1	
VR715		VRV0109B203	V.RESISTOR 20K	1	
VR716,17		VRV0109B102	V.RESISTOR 1K	2	
VR718		VRV0109B203	V.RESISTOR 20K	1	
VR719		VRV0109B102	V.RESISTOR 1K	1	
VR720		VRV0109B203	V.RESISTOR 20K	1	
VR721		VRV0109B102	V.RESISTOR 1K	1	
			MISCELLANEOUS		
		VML2143	CARD PULLER	1	
		VML2144	CARD PULLER	1	
		VMS4174	PIN	6	
		VMZ1547	BARRIER	1	
		VSC3056	SHIELD CASE	1	
		VXA3966	P.C.B. SHIELD PLATE	1	
		XNG26E	NUT	4	
		XYNV3+K6FR	SCREW	6	
		XYN26+C12	SCREW	4	

Ref.No.		Part No.	Part Name & Description	Pcs	Remarks
	■	VEP83098C	P.C.BOARD W/COMPONENT		FOR AU-62-P
			W3 MOD & DEMOD		
			CAPACITORS		
C51		ECUM1H560JCN	C.CAPACITOR CH 50V 56P	1	
C62		ECEA1CU470	E.CAPACITOR 16V 47U	1	
C63		ECEA1CU101	E.CAPACITOR 16V 100U	1	
C64		ECUM1E104ZFN	C.CAPACITOR CH 25V 0.1U	1	
C65		ECEA1CU101	E.CAPACITOR 16V 100U	1	
C66		ECUM1E104ZFN	C.CAPACITOR CH 25V 0.1U	1	
C67,68		ECEA1CU101	E.CAPACITOR 16V 100U	2	
C69,70		ECEA1AU101	E.CAPACITOR 10V 100U	2	
C71		ECEA1CU470	E.CAPACITOR 16V 47U	1	
C72		ECEA1CU101	E.CAPACITOR 16V 100U	1	
C302		ECUM1H103KBN	C.CAPACITOR CH 50V 0.01U	1	
C303		ECUM1H220JCN	C.CAPACITOR CH 50V 22P	1	
C304		ECUM1H103KBN	C.CAPACITOR CH 50V 0.01U	1	
C306		ECUM1H220JCN	C.CAPACITOR CH 50V 22P	1	
C307		ECEA1AU101	E.CAPACITOR 10V 100U	1	
C308,09		ECUM1H103KBN	C.CAPACITOR CH 50V 0.01U	2	
C310		ECEA1AU101	E.CAPACITOR 10V 100U	1	
C311		ECUM1H103KBN	C.CAPACITOR CH 50V 0.01U	1	
C316		ECUM1E104ZFN	C.CAPACITOR CH 25V 0.1U	1	
C322		ECUM1E104ZFN	C.CAPACITOR CH 25V 0.1U	1	
C325		ECUM1E104ZFN	C.CAPACITOR CH 25V 0.1U	1	
C342		ECUM1H103KBN	C.CAPACITOR CH 50V 0.01U	1	
C343		ECUM1H120JCN	C.CAPACITOR CH 50V 12P	1	
C344		ECUM1H121JCN	C.CAPACITOR CH 50V 120P	1	
C345		ECUM1H100DCN	C.CAPACITOR CH 50V 10P	1	
C346		ECUM1H103KBN	C.CAPACITOR CH 50V 0.01U	1	
C347,48		ECEA1AU101	E.CAPACITOR 10V 100U	2	
C349		ECUM1H103KBN	C.CAPACITOR CH 50V 0.01U	1	
C350		ECUM1H181JCN	C.CAPACITOR CH 50V 180P	1	
C351		ECUM1H221JCN	C.CAPACITOR CH 50V 220P	1	
C352		ECUM1H103KBN	C.CAPACITOR CH 50V 0.01U	1	
C353		ECUM1H101JCN	C.CAPACITOR CH 50V 100P	1	
C354,55		ECUM1H103KBN	C.CAPACITOR CH 50V 0.01U	2	
C356		ECUM1E104ZFN	C.CAPACITOR CH 25V 0.1U	1	
C357		ECEA1HU2R2	E.CAPACITOR 50V 2.2U	1	
C358		ECEA1AU101	E.CAPACITOR 10V 100U	1	
C380		ECUM1E104ZFN	C.CAPACITOR CH 25V 0.1U	1	
C381		ECUM1H103KBN	C.CAPACITOR CH 50V 0.01U	1	
C382		ECUM1E104ZFN	C.CAPACITOR CH 25V 0.1U	1	
C383		ECEA1AU101	E.CAPACITOR 10V 100U	1	
C384		ECUM1H103KBN	C.CAPACITOR CH 50V 0.01U	1	
C386		ECUM1H050DCN	C.CAPACITOR CH 50V 50P	1	
C387		ECUM1H560JCN	C.CAPACITOR CH 50V 56P	1	
C388		ECUM1H121JCN	C.CAPACITOR CH 50V 120P	1	
C389		ECUM1H103KBN	C.CAPACITOR CH 50V 0.01U	1	
C390		ECUM1H101JCN	C.CAPACITOR CH 50V 100P	1	
C391		ECUM1H100DCN	C.CAPACITOR CH 50V 10P	1	
C392		ECUM1H103KBN	C.CAPACITOR CH 50V 0.01U	1	
C393		ECEA1AU101	E.CAPACITOR 10V 100U	1	
C394		ECUM1H103KBN	C.CAPACITOR CH 50V 0.01U	1	
C395		ECUM1E104ZFN	C.CAPACITOR CH 25V 0.1U	1	
C396,97		ECUM1H103KBN	C.CAPACITOR CH 50V 0.01U	2	
C398		ECUM1H150JCN	C.CAPACITOR CH 50V 15P	1	
C399		ECUM1H103KBN	C.CAPACITOR CH 50V 0.01U	1	
C400		ECUM1E104ZFN	C.CAPACITOR CH 25V 0.1U	1	
C401-03		ECUM1H103KBN	C.CAPACITOR CH 50V 0.01U	3	
C404		ECEA1AU101	E.CAPACITOR 10V 100U	1	
C405-07		ECUM1E104ZFN	C.CAPACITOR CH 25V 0.1U	3	
C408,09		ECUM1H330JCN	C.CAPACITOR CH 50V 33P	2	
C410		ECEA1AU471	E.CAPACITOR 10V 470U	1	
C411		ECUM1E104ZFN	C.CAPACITOR CH 25V 0.1U	1	
C412		ECUM1H221JCN	C.CAPACITOR CH 50V 220P	1	
C413		ECEA1AU101	E.CAPACITOR 10V 100U	1	
C414		ECUM1H470JCN	C.CAPACITOR CH 50V 47P	1	

Ref.No.		Part No.	Part Name & Description	Pcs	Remarks
C415		ECUM1H180JCN	C.CAPACITOR CH 50V 18P	1	
C416		ECUM1H181JCN	C.CAPACITOR CH 50V 180P	1	
C417,18		ECUM1E104ZFN	C.CAPACITOR CH 25V 0.1U	2	
C419		ECUM1H331JCN	C.CAPACITOR CH 50V 330P	1	
C420		ECUM1H220JCN	C.CAPACITOR CH 50V 22P	1	
C421		ECUM1H680JCN	C.CAPACITOR CH 50V 68P	1	
C422		ECUM1H330JCN	C.CAPACITOR CH 50V 33P	1	
C423		ECEA1AU101	E.CAPACITOR 10V 100U	1	
C424		ECEA1CU100	E.CAPACITOR 16V 10U	1	
C425		ECUM1H221JCN	C.CAPACITOR CH 50V 220P	1	
C426		VCM0044	M.CAPACITOR 130P	1	
C427		VCM0023	M.CAPACITOR 379P	1	
C428		ECUM1H680JCN	C.CAPACITOR CH 50V 68P	1	
C432		ECEA1AU221	E.CAPACITOR 10V 220U	1	
C433		ECUM1H050DCN	C.CAPACITOR CH 50V 50P	1	
C434		ECUM1H220JCN	C.CAPACITOR CH 50V 22P	1	
C435		ECUM1H020CCN	C.CAPACITOR CH 50V 2P	1	
C436,37		ECUM1E104ZFN	C.CAPACITOR CH 25V 0.1U	2	
C438		VCM0023	M.CAPACITOR 379P	1	
C439		VCM0057	M.CAPACITOR 169P	1	
C440		ECUM1H100DCN	C.CAPACITOR CH 50V 10P	1	
C442,43		ECEA1CU221	E.CAPACITOR 16V 220U	2	
C444,45		ECUM1H103KBN	C.CAPACITOR CH 50V 0.01U	2	
C450		ECEA1AU101	E.CAPACITOR 10V 100U	1	
C453		ECUM1E104ZFN	C.CAPACITOR CH 25V 0.1U	1	
C467		ECUM1E104ZFN	C.CAPACITOR CH 25V 0.1U	1	
C468		ECUM1H103KBN	C.CAPACITOR CH 50V 0.01U	1	
C469		ECUM1H220JCN	C.CAPACITOR CH 50V 22P	1	
C701,02		ECUM1H103KBN	C.CAPACITOR CH 50V 0.01U	2	
C703		ECEA1AU101	E.CAPACITOR 10V 100U	1	
C704,05		ECUM1H103KBN	C.CAPACITOR CH 50V 0.01U	2	
C725		ECCF1H180JC	C.CAPACITOR 50V 18P	1	
C726		ECUM1H103KBN	C.CAPACITOR CH 50V 0.01U	1	
C727		ECUM1E104ZFN	C.CAPACITOR CH 25V 0.1U	1	
C728		ECUM1H220JCN	C.CAPACITOR CH 50V 22P	1	
C729		ECUM1H121JCN	C.CAPACITOR CH 50V 120P	1	
C730,31		ECUM1H103KBN	C.CAPACITOR CH 50V 0.01U	2	
C732		ECUM1H101JCN	C.CAPACITOR CH 50V 100P	1	
C733		ECEA1AU101	E.CAPACITOR 10V 100U	1	
C734		ECUM1H331JCN	C.CAPACITOR CH 50V 330P	1	
C735		ECEA1AU101	E.CAPACITOR 10V 100U	1	
C736		ECUM1H103KBN	C.CAPACITOR CH 50V 0.01U	1	
C737		ECUM1H121JCN	C.CAPACITOR CH 50V 120P	1	
C738		ECUM1H103KBN	C.CAPACITOR CH 50V 0.01U	1	
C744		ECUM1E104ZFN	C.CAPACITOR CH 25V 0.1U	1	
C745		ECUM1H103KBN	C.CAPACITOR CH 50V 0.01U	1	
C746		ECUM1E104ZFN	C.CAPACITOR CH 25V 0.1U	1	
C747		ECEA1AU101	E.CAPACITOR 10V 100U	1	
C749		ECUM1H561JCN	C.CAPACITOR CH 50V 560P	1	
C750		ECUM1H331JCN	C.CAPACITOR CH 50V 330P	1	
C751		ECUM1H221JCN	C.CAPACITOR CH 50V 220P	1	
C752		ECUM1H561JCN	C.CAPACITOR CH 50V 560P	1	
C753		ECUM1H390JCN	C.CAPACITOR CH 50V 39P	1	
C754		ECUM1H181JCN	C.CAPACITOR CH 50V 180P	1	
C755		ECUM1H330JCN	C.CAPACITOR CH 50V 33P	1	
C756		ECUM1H101JCN	C.CAPACITOR CH 50V 100P	1	
C757		ECUM1H330JCN	C.CAPACITOR CH 50V 33P	1	
C758		ECUM1H050DCN	C.CAPACITOR CH 50V 50P	1	
C759		ECUM1E104ZFN	C.CAPACITOR CH 25V 0.1U	1	
C760		ECUM1H680JCN	C.CAPACITOR CH 50V 68P	1	
C761		ECUM1H121JCN	C.CAPACITOR CH 50V 120P	1	
C762		ECUM1H103KBN	C.CAPACITOR CH 50V 0.01U	1	
C763		ECUM1H121JCN	C.CAPACITOR CH 50V 120P	1	
C764		ECUM1H100DCN	C.CAPACITOR CH 50V 10P	1	
C765,66		ECUM1H103KBN	C.CAPACITOR CH 50V 0.01U	2	
C767		ECEA1AU101	E.CAPACITOR 10V 100U	1	
C768,69		ECUM1H103KBN	C.CAPACITOR CH 50V 0.01U	2	
C770		ECUM1H150JCN	C.CAPACITOR CH 50V 15P	1	
C771		ECUM1H681JCN	C.CAPACITOR CH 50V 680P	1	
C772		ECUM1E104ZFN	C.CAPACITOR CH 25V 0.1U	1	
C773-75		ECUM1H103KBN	C.CAPACITOR CH 50V 0.01U	3	
C776		ECUM1E104ZFN	C.CAPACITOR CH 25V 0.1U	1	
C777		ECEA1AU101	E.CAPACITOR 10V 100U	1	
C778,79		ECUM1E104ZFN	C.CAPACITOR CH 25V 0.1U	2	
C780,81		ECUM1H470JCN	C.CAPACITOR CH 50V 47P	2	

Refer to the P.C.BOARDS LIST, page 6-1-1, before using this page.

Ref.No.		Part No.	Part Name & Description	Pcs	Remarks
C782		ECEA1AU471	E.CAPACITOR 10V 470U	1	
C783		ECUM1E104ZFN	C.CAPACITOR CH 25V 0.1U	1	
C784		ECUM1H221JCN	C.CAPACITOR CH 50V 220P	1	
C785		ECEA1AU101	E.CAPACITOR 10V 100U	1	
C786		ECUM1H121JCN	C.CAPACITOR CH 50V 120P	1	
C787		ECUM1H100DCN	C.CAPACITOR CH 50V 10P	1	
C788		ECUM1H331JCN	C.CAPACITOR CH 50V 330P	1	
C789,90		ECUM1E104ZFN	C.CAPACITOR CH 25V 0.1U	2	
C791		ECUM1H331JCN	C.CAPACITOR CH 50V 330P	1	
C792		ECUM1H220JCN	C.CAPACITOR CH 50V 22P	1	
C793		ECUM1H680JCN	C.CAPACITOR CH 50V 68P	1	
C794		ECUM1H330JCN	C.CAPACITOR CH 50V 33P	1	
C796		ECEA1CU100	E.CAPACITOR 16V 10U	1	
C797		VCM0046	M.CAPACITOR 229P	1	
C798		ECUM1H100DCN	C.CAPACITOR CH 50V 10P	1	
C799		ECEA1AU221	E.CAPACITOR 10V 220U	1	
C800		ECUM1H050DCN	C.CAPACITOR CH 50V 50P	1	
C801		ECUM1H020CCN	C.CAPACITOR CH 50V 2P	1	
C802		ECUM1H121JCN	C.CAPACITOR CH 50V 120P	1	
C803,04		ECUM1E104ZFN	C.CAPACITOR CH 25V 0.1U	2	
C805		ECUM1H100DCN	C.CAPACITOR CH 50V 10P	1	
C806		VCM0057	M.CAPACITOR 169P	1	
C807		VCM0024	M.CAPACITOR 270P	1	
C808		ECEA1CU221	E.CAPACITOR 16V 220U	1	
C810		ECEA1CU221	E.CAPACITOR 16V 220U	1	
C811,12		ECUM1H103KBN	C.CAPACITOR CH 50V 0.01U	2	
C817		ECEA1AU101	E.CAPACITOR 10V 100U	1	
C818		ECUM1H220JCN	C.CAPACITOR CH 50V 22P	1	
C821		ECUM1E104ZFN	C.CAPACITOR CH 25V 0.1U	1	
D301		MA151WK	DIODE	1	
D303		MA151K	DIODE	1	
D305		MA151K	DIODE	1	
D306,07		MA151WK	DIODE	2	
D308,09		MA151WA	DIODE	2	
D701		MA151WK	DIODE	1	
D702,03		MA151K	DIODE	2	
D705		MA151K	DIODE	1	
D706		MA151WK	DIODE	1	
DL301		VLD0191	DELAY	1	
DL701		VLD0191	DELAY	1	
FL302		VLF0787	FILTER	1	
FL303		VLF0819	FILTER	1	
FL701		VLF0821	FILTER	1	
IC10		AN79N09	IC	1	
IC11,12		AN79M05F	IC	2	
IC13		AN78M05F	IC	1	
IC14		AN78N05	IC	1	
IC15		AN78N09	IC	1	
IC301		AN6308S	IC	1	
IC306		NJM1496M	IC	1	
IC307		UPD4053BG	IC	1	
IC311-15		10116D	IC	5	
IC316		SN74LS123NS	IC	1	
IC317		MC74HC00AF	IC	1	
IC319		NE5539D	IC	1	
IC326		RC082BM	IC	1	
IC701		AN6308S	IC	1	
IC705		NJM1496M	IC	1	
IC706		UPD4053BG	IC	1	
IC708-12		10116D	IC	5	
IC716		NE5539D	IC	1	

Ref.No.		Part No.	Part Name & Description	Pcs	Remarks
L301		VLQEL05F101K	COIL 100UH	1	
L302,03		VLQEL05S150J	COIL 15UH	2	
L304		VLQEL05F101K	COIL 100UH	1	
L308		VLQEL05S2R7J	COIL 2.7UH	1	
L309,10		VLQEL05F101K	COIL 100UH	2	
L311		VLQEL05S220J	COIL 22UH	1	
L312		VLQEL05S3R3J	COIL 3.3UH	1	
L313		VLQEL05F101K	COIL 100UH	1	
L318		VLQEL05F101K	COIL 100UH	1	
L320		VLQEL05S2R2J	COIL 2.2UH	1	
L321		VLQEL05S120J	COIL 12UH	1	
L322		VLQEL05S5R6J	COIL 5.6UH	1	
L323		VLQEL05F101K	COIL 100UH	1	
L324		VLQEL05SR47M	COIL 0.47UH	1	
L325-27		VLQEL05F101K	COIL 100UH	3	
L328		VLQEL05S6R8J	COIL 6.8UH	1	
L329		VLQEL05F101K	COIL 100UH	1	
L333-35		VLQEL05F101K	COIL 100UH	3	
L701		VLQEL05F101K	COIL 100UH	1	
L709		VLQEL05S4R7J	COIL 4.7UH	1	
L710		VLQEL05F101K	COIL 100UH	1	
L711		VLQEL05S560J	COIL 56UH	1	
L712		VLQEL05F101K	COIL 100UH	1	
L713		VLQEL05S3R9J	COIL 3.9UH	1	
L715		VLQEL05F101K	COIL 100UH	1	
L716		VLQEL05S181J	COIL 180UH	1	
L717		VLQEL05S680J	COIL 68UH	1	
L718		VLQEL05S3R3J	COIL 3.3UH	1	
L719,20		VLQEL05S8R2J	COIL 8.2UH	2	
L721		VLQEL05S2R2J	COIL 2.2UH	1	
L722		VLQEL05S150J	COIL 15UH	1	
L723		VLQEL05S8R2J	COIL 8.2UH	1	
L724		VLQEL05F101K	COIL 100UH	1	
L725		VLQEL05SR47M	COIL 0.47UH	1	
L726-28		VLQEL05F101K	COIL 100UH	3	
L729		VLQEL05S150J	COIL 15UH	1	
L731-33		VLQEL05F101K	COIL 100UH	3	
Q301-04		2SC2295	TRANSISTOR CHIP	4	(B,C)
Q313,14		2SC2295	TRANSISTOR CHIP	2	(B,C)
Q315		2SA1022	TRANSISTOR CHIP	1	(B,C)
Q316		2SC2295	TRANSISTOR CHIP	1	(B,C)
Q317,18		2SA1022	TRANSISTOR CHIP	2	(B,C)
Q319		IMX4	TRANSISTOR	1	
Q320		UN2113	TRANSISTOR-RESISTOR	1	
Q324		2SC2295	TRANSISTOR CHIP	1	(B,C)
Q325		2SA1022	TRANSISTOR CHIP	1	(B,C)
Q326		2SC2295	TRANSISTOR CHIP	1	(B,C)
Q327,28		2SA1022	TRANSISTOR CHIP	2	(B,C)
Q329		2SC2295	TRANSISTOR CHIP	1	(B,C)
Q330		2SA1022	TRANSISTOR CHIP	1	(B,C)
Q331-38		2SC2295	TRANSISTOR CHIP	8	(B,C)
Q339,40		UN2213	TRANSISTOR-RESISTOR	2	
Q341		2SA1462	TRANSISTOR	1	
Q342,43		2SC3757	TRANSISTOR	2	(Q,R)
Q344		2SC2295	TRANSISTOR CHIP	1	(B,C)
Q345		2SA1022	TRANSISTOR CHIP	1	(B,C)
Q346		2SC2480	TRANSISTOR	1	
Q347		2SA1462	TRANSISTOR	1	
Q351		2SK374	TRANSISTOR	1	
Q352		2SC3757	TRANSISTOR	1	(Q,R)
Q353		2SA1226	TRANSISTOR	1	
Q354		2SD601	TRANSISTOR CHIP	1	(Q,R)
Q355		2SA1022	TRANSISTOR CHIP	1	(B,C)
Q356-61		UN2113	TRANSISTOR-RESISTOR	6	
Q376		2SA1462	TRANSISTOR	1	
Q377		2SA1226	TRANSISTOR	1	
Q378		2SB709	TRANSISTOR CHIP	1	(Q,R)
Q379		2SC2480	TRANSISTOR	1	
Q382-84		2SC3757	TRANSISTOR	3	(Q,R)
Q385		2SC2295	TRANSISTOR CHIP	1	(B,C)
Q701,02		2SA1022	TRANSISTOR CHIP	2	(B,C)

Refer to the P.C.BOARDS LIST, page 6-1-1, before using this page.

Ref.No.		Part No.	Part Name & Description	Pcs	Remarks
Q710,11		2SC2295	TRANSISTOR CHIP	2	(B,C)
Q712		2SA1022	TRANSISTOR CHIP	1	(B,C)
Q713		2SC2295	TRANSISTOR CHIP	1	(B,C)
Q714,15		2SA1022	TRANSISTOR CHIP	2	(B,C)
Q716		2SC2295	TRANSISTOR CHIP	1	(B,C)
Q717		2SA1022	TRANSISTOR CHIP	1	(B,C)
Q718		2SC2295	TRANSISTOR CHIP	1	(B,C)
Q719,20		2SA1022	TRANSISTOR CHIP	2	(B,C)
Q721		2SC2295	TRANSISTOR CHIP	1	(B,C)
Q722		2SA1022	TRANSISTOR CHIP	1	(B,C)
Q723-30		2SC2295	TRANSISTOR CHIP	8	(B,C)
Q731		UN2213	TRANSISTOR-RESISTOR	1	
Q732		2SA1462	TRANSISTOR	1	
Q733		2SC2295	TRANSISTOR CHIP	1	(B,C)
Q734		2SA1022	TRANSISTOR CHIP	1	(B,C)
Q735		2SC2480	TRANSISTOR	1	
Q736		2SA1462	TRANSISTOR	1	
Q740		2SK374	TRANSISTOR	1	
Q741		2SC3757	TRANSISTOR	1	(Q,R)
Q742		2SA1226	TRANSISTOR	1	
Q743		2SD601	TRANSISTOR CHIP	1	(Q,R)
Q754		2SA1462	TRANSISTOR	1	
Q755		2SA1226	TRANSISTOR	1	
Q756		2SB709	TRANSISTOR CHIP	1	(Q,R)
Q757		2SC2480	TRANSISTOR	1	
Q758-60		2SC3757	TRANSISTOR	3	(Q,R)
			RESISTORS		
R20		ERJ6GEYJ472	M.RESISTOR CH 1/10W 4.7K	1	
R91		ERJ6GEYJ472	M.RESISTOR CH 1/10W 4.7K	1	
R101		ERJ6GEYJ470	M.RESISTOR CH 1/10W 47	1	
R301		ERJ6GEYJ470	M.RESISTOR CH 1/10W 47	1	
R302		ERJ6GEYJ681	M.RESISTOR CH 1/10W 680	1	
R303		ERJ6GEYJ102	M.RESISTOR CH 1/10W 1K	1	
R304		ERJ6GEYJ332	M.RESISTOR CH 1/10W 3.3K	1	
R305		ERJ6GEYJ470	M.RESISTOR CH 1/10W 47	1	
R306		ERJ6GEYJ681	M.RESISTOR CH 1/10W 680	1	
R307		ERJ6GEYJ102	M.RESISTOR CH 1/10W 1K	1	
R308		ERJ6GEYJ332	M.RESISTOR CH 1/10W 3.3K	1	
R309		ERJ6GEYJ222	M.RESISTOR CH 1/10W 2.2K	1	
R310		ERJ6GEYJ470	M.RESISTOR CH 1/10W 47	1	
R332		ERJ6GEYJ152	M.RESISTOR CH 1/10W 1.5K	1	
R333,34		ERJ6GEYG471	M.RESISTOR CH 1/10W 470	2	
R335,36		ERJ6GEYJ470	M.RESISTOR CH 1/10W 47	2	
R337,38		ERJ6GEYJ222	M.RESISTOR CH 1/10W 2.2K	2	
R339,40		ERJ6GEYJ271	M.RESISTOR CH 1/10W 270	2	
R341		ERJ6GEYJ470	M.RESISTOR CH 1/10W 47	1	
R342		ERJ6GEYJ271	M.RESISTOR CH 1/10W 270	1	
R343		ERJ6GEYJ821	M.RESISTOR CH 1/10W 820	1	
R344		ERJ6GEYJ470	M.RESISTOR CH 1/10W 47	1	
R345		ERJ6GEYJ222	M.RESISTOR CH 1/10W 2.2K	1	
R346		ERJ6GEYJ102	M.RESISTOR CH 1/10W 1K	1	
R347		ERJ6GEYG331	M.RESISTOR CH 1/10W 330	1	
R348		ERJ6GEYJ153	M.RESISTOR CH 1/10W 15K	1	
R349		ERJ6GEYJ333	M.RESISTOR CH 1/10W 33K	1	
R350,51		ERJ6GEYJ220	M.RESISTOR CH 1/10W 22	2	
R352		ERJ6GEYJ470	M.RESISTOR CH 1/10W 47	1	
R353		ERJ6GEYJ152	M.RESISTOR CH 1/10W 1.5K	1	
R354		ERJ6GEYJ221	M.RESISTOR CH 1/10W 220	1	
R355		ERJ6GEYJ102	M.RESISTOR CH 1/10W 1K	1	
R356		ERJ6GEYJ221	M.RESISTOR CH 1/10W 220	1	
R357		ERJ6GEYJ222	M.RESISTOR CH 1/10W 2.2K	1	
R358		ERJ6GEYJ101	M.RESISTOR CH 1/10W 100	1	
R359		ERJ6GEYJ472	M.RESISTOR CH 1/10W 4.7K	1	
R360,61		ERJ6GEYJ473	M.RESISTOR CH 1/10W 47K	2	
R362		ERJ6GEYJ472	M.RESISTOR CH 1/10W 4.7K	1	
R363		ERJ6GEYJ223	M.RESISTOR CH 1/10W 22K	1	
R364		ERJ6GEYJ273	M.RESISTOR CH 1/10W 27K	1	
R365		ERJ6GEYJ473	M.RESISTOR CH 1/10W 47K	1	
R366		ERJ6GEYJ223	M.RESISTOR CH 1/10W 22K	1	
R367		ERJ6GEYJ104	M.RESISTOR CH 1/10W 100K	1	
R368		ERJ6GEYJ472	M.RESISTOR CH 1/10W 4.7K	1	
R369		ERJ6GEYJ103	M.RESISTOR CH 1/10W 10K	1	

Ref.No.		Part No.	Part Name & Description	Pcs	Remarks
R370		ERJ6GEYJ223	M.RESISTOR CH 1/10W 22K	1	
R371		ERJ6GEYJ682	M.RESISTOR CH 1/10W 6.8K	1	
R397,98		ERJ6GEYJ470	M.RESISTOR CH 1/10W 47	2	
R399		ERJ6GEYJ472	M.RESISTOR CH 1/10W 4.7K	1	
R400		ERJ6GEYJ152	M.RESISTOR CH 1/10W 1.5K	1	
R401-04		ERJ6GEYG621	M.RESISTOR CH 1/10W 620	4	
R405		ERJ6GEYJ152	M.RESISTOR CH 1/10W 1.5K	1	
R406		ERJ6GEYJ562	M.RESISTOR CH 1/10W 5.6K	1	
R407		ERJ6GEYG301	M.RESISTOR CH 1/10W 300	1	
R409		ERJ6GEYJ470	M.RESISTOR CH 1/10W 47	1	
R410		ERJ6GEYJ102	M.RESISTOR CH 1/10W 1K	1	
R411		ERJ6GEYJ681	M.RESISTOR CH 1/10W 680	1	
R412		ERJ6GEYJ102	M.RESISTOR CH 1/10W 1K	1	
R413		ERJ6GEYJ152	M.RESISTOR CH 1/10W 1.5K	1	
R414		ERJ6GEYJ470	M.RESISTOR CH 1/10W 47	1	
R415		ERJ6GEYJ221	M.RESISTOR CH 1/10W 220	1	
R416,17		ERJ6GEYJ222	M.RESISTOR CH 1/10W 2.2K	2	
R418		ERJ6GEYG331	M.RESISTOR CH 1/10W 330	1	
R419		ERJ6GEYJ332	M.RESISTOR CH 1/10W 3.3K	1	
R420		ERJ6GEYJ470	M.RESISTOR CH 1/10W 47	1	
R421		ERJ6GEYJ102	M.RESISTOR CH 1/10W 1K	1	
R422		ERJ6GEYJ471	M.RESISTOR CH 1/10W 470	1	
R423		ERJ6GEYJ102	M.RESISTOR CH 1/10W 1K	1	
R424		ERJ6GEYJ222	M.RESISTOR CH 1/10W 2.2K	1	
R425,26		ERJ6GEYJ470	M.RESISTOR CH 1/10W 47	2	
R427-34		ERJ6GEYJ102	M.RESISTOR CH 1/10W 1K	8	
R435,36		ERJ6GEYJ332	M.RESISTOR CH 1/10W 3.3K	2	
R437		ERJ6GEYJ101	M.RESISTOR CH 1/10W 100	1	
R438		ERJ6GEYJ471	M.RESISTOR CH 1/10W 470	1	
R439		ERJ6GEYJ471	M.RESISTOR CH 1/10W 470	1	
R440		ERJ6GEYJ470	M.RESISTOR CH 1/10W 47	1	
R441,42		ERJ6GEYJ681	M.RESISTOR CH 1/10W 680	2	
R443,44		ERJ6GEYJ101	M.RESISTOR CH 1/10W 100	2	
R445		ERJ6GEYJ470	M.RESISTOR CH 1/10W 47	1	
R446		ERJ6GEYJ151	M.RESISTOR CH 1/10W 150	1	
R447,48		ERJ6GEYJ222	M.RESISTOR CH 1/10W 2.2K	2	
R449		ERJ6GEYJ470	M.RESISTOR CH 1/10W 47	1	
R450,51		ERJ6GEYJ222	M.RESISTOR CH 1/10W 2.2K	2	
R452,53		ERJ6GEYJ470	M.RESISTOR CH 1/10W 47	2	
R454-65		ERJ6GEYJ102	M.RESISTOR CH 1/10W 1K	12	
R466		ERJ6GEYJ683	M.RESISTOR CH 1/10W 68K	1	
R467,68		ERJ6GEYJ103	M.RESISTOR CH 1/10W 10K	2	
R469,70		ERJ6GEYJ150	M.RESISTOR CH 1/10W 15	2	
R471,72		ERJ6GEYJ332	M.RESISTOR CH 1/10W 3.3K	2	
R473		ERJ6GEYJ101	M.RESISTOR CH 1/10W 100	1	
R474		ERDS2TJ222	C.RESISTOR 1/4W 2.2K	1	
R475		ERJ6GEYJ102	M.RESISTOR CH 1/10W 1K	1	
R476		ERJ6GEYJ471	M.RESISTOR CH 1/10W 470	1	
R478		ERJ6GEYJ102	M.RESISTOR CH 1/10W 1K	1	
R479		ERJ6GEYJ222	M.RESISTOR CH 1/10W 2.2K	1	
R480,81		ERJ6GEYJ471	M.RESISTOR CH 1/10W 470	2	
R482		ERJ6GEYJ470	M.RESISTOR CH 1/10W 47	1	
R483,84		ERJ6GEYJ333	M.RESISTOR CH 1/10W 33K	2	
R485,86		ERJ6GEYJ102	M.RESISTOR CH 1/10W 1K	2	
R487		ERJ6GEYJ222	M.RESISTOR CH 1/10W 2.2K	1	
R488		ERJ6GEYJ221	M.RESISTOR CH 1/10W 220	1	
R489		ERJ6GEYJ392	M.RESISTOR CH 1/10W 3.9K	1	
R490		ERJ6GEYJ470	M.RESISTOR CH 1/10W 47	1	
R491		ERJ6GEYJ183	M.RESISTOR CH 1/10W 18K	1	
R492		ERJ6GEYJ151	M.RESISTOR CH 1/10W 150	1	
R493		ERJ6GEYJ152	M.RESISTOR CH 1/10W 1.5K	1	
R494,95		ERJ6GEYJ101	M.RESISTOR CH 1/10W 100	2	
R496		ERJ6GEYJ222	M.RESISTOR CH 1/10W 2.2K	1	
R497		ERJ6GEYJ102	M.RESISTOR CH 1/10W 1K	1	
R498		ERJ6GEYJ101	M.RESISTOR CH 1/10W 100	1	
R499		ERJ6GEYJ332	M.RESISTOR CH 1/10W 3.3K	1	
R500		ERJ6GEYJ223	M.RESISTOR CH 1/10W 22K	1	
R501		ERJ6GEYJ332	M.RESISTOR CH 1/10W 3.3K	1	
R502		ERJ6GEYJ472	M.RESISTOR CH 1/10W 4.7K	1	
R503		ERJ6GEYJ103	M.RESISTOR CH 1/10W 10K	1	
R504		ERJ6GEYJ683	M.RESISTOR CH 1/10W 68K	1	
R505,06		ERJ6GEYJ473	M.RESISTOR CH 1/10W 47K	2	
R507		ERJ6GEYJ471	M.RESISTOR CH 1/10W 470	1	
R509		ERJ6GEYJ221	M.RESISTOR CH 1/10W 220	1	
R510		ERJ6GEYJ392	M.RESISTOR CH 1/10W 3.9K	1	

Refer to the P.C.BOARDS LIST, page 6-1-1, before using this page.

Ref.No.		Part No.	Part Name & Description	Pcs	Remarks
R511		VRE0034E27B	M.RESISTOR CH 1/10W 1.87K	1	
R512		VRE0034E751	M.RESISTOR CH 1/10W 750	1	
R513		ERJ6GEYJ332	M.RESISTOR CH 1/10W 3.3K	1	
R514		ERJ6GEYJ152	M.RESISTOR CH 1/10W 1.5K	1	
R515		ERJ6GEYJ682	M.RESISTOR CH 1/10W 6.8K	1	
R516		ERJ6GEYG301	M.RESISTOR CH 1/10W 300	1	
R517		ERJ6GEY0R00	M.RESISTOR CH 1/10W 0	1	
R518		ERJ6GEYG471	M.RESISTOR CH 1/10W 470	1	
R519		ERJ6GEYJ332	M.RESISTOR CH 1/10W 3.3K	1	
R520		ERJ6GEYJ101	M.RESISTOR CH 1/10W 100	1	
R521		ERJ6GEYJ151	M.RESISTOR CH 1/10W 150	1	
R522		VRE0034E26A	M.RESISTOR CH 1/10W 182	1	
R523		ERJ6GEYJ102	M.RESISTOR CH 1/10W 1K	1	
R524		VRE0034E89A	M.RESISTOR CH 1/10W 825	1	
R525		VRE0034E21B	M.RESISTOR CH 1/10W 1.62K	1	
R526,27		ERJ6GEYJ470	M.RESISTOR CH 1/10W 47	2	
R528		ERJ6GEYJ101	M.RESISTOR CH 1/10W 100	1	
R529		ERJ6GEYJ102	M.RESISTOR CH 1/10W 1K	1	
R530		ERJ6GEYJ681	M.RESISTOR CH 1/10W 680	1	
R531,32		ERJ6GEYJ273	M.RESISTOR CH 1/10W 27K	2	
R533,34		ERJ6GEYJ183	M.RESISTOR CH 1/10W 18K	2	
R535,36		ERJ6GEYJ221	M.RESISTOR CH 1/10W 220	2	
R537		ERJ6GEYG243	M.RESISTOR CH 1/10W 24K	1	
R549		ERJ6GEYJ470	M.RESISTOR CH 1/10W 47	1	
R550		ERJ6GEYJ472	M.RESISTOR CH 1/10W 4.7K	1	
R551		ERJ6GEYJ473	M.RESISTOR CH 1/10W 47K	1	
R552		ERJ6GEYJ332	M.RESISTOR CH 1/10W 3.3K	1	
R553		ERJ6GEYJ471	M.RESISTOR CH 1/10W 470	1	
R554		ERJ6GEYJ102	M.RESISTOR CH 1/10W 1K	1	
R555		ERJ6GEYJ472	M.RESISTOR CH 1/10W 4.7K	1	
R556		ERJ6GEYJ122	M.RESISTOR CH1/10W 1.2K	1	
R557		ERDS2TJ152	C.RESISTOR 1/4W 1.5K	1	
R558		ERJ6GEYJ470	M.RESISTOR CH 1/10W 47	1	
R559		ERJ6GEYJ152	M.RESISTOR CH 1/10W 1.5K	1	
R560		ERJ6GEYJ470	M.RESISTOR CH 1/10W 47	1	
R561-63		ERJ6GEYJ473	M.RESISTOR CH 1/10W 47K	3	
R564		ERJ6GEYJ222	M.RESISTOR CH 1/10W 2.2K	1	
R565		ERJ6GEYJ223	M.RESISTOR CH 1/10W 22K	1	
R566		ERJ6GEYJ222	M.RESISTOR CH 1/10W 2.2K	1	
R567		ERJ6GEYJ223	M.RESISTOR CH 1/10W 22K	1	
R620		ERJ6GEYJ101	M.RESISTOR CH 1/10W 100	1	
R624-26		ERJ6GEYJ103	M.RESISTOR CH 1/10W 10K	3	
R627		ERJ6GEYJ472	M.RESISTOR CH 1/10W 4.7K	1	
R628		ERJ6GEYJ223	M.RESISTOR CH 1/10W 22K	1	
R629		ERJ6GEYJ472	M.RESISTOR CH 1/10W 4.7K	1	
R630,31		ERJ6GEYJ101	M.RESISTOR CH 1/10W 100	2	
R633		ERJ6GEYJ331	M.RESISTOR CH 1/10W 330	1	
R636		ERJ6GEYJ470	M.RESISTOR CH 1/10W 47	1	
R637		ERJ6GEYJ102	M.RESISTOR CH 1/10W 1K	1	
R638		ERJ6GEY0R00	M.RESISTOR CH 1/10W 0	1	
R639,40		ERDS2TJ331	C.RESISTOR 1/4W 330	2	
R643		ERDS2TJ331	C.RESISTOR 1/4W 330	1	
R701		ERJ6GEYJ470	M.RESISTOR CH 1/10W 47	1	
R702		ERJ6GEYJ102	M.RESISTOR CH 1/10W 1K	1	
R703		ERJ6GEYJ821	M.RESISTOR CH 1/10W 820	1	
R704		ERJ6GEY0R00	M.RESISTOR CH 1/10W 0	1	
R705		ERJ6GEYJ332	M.RESISTOR CH 1/10W 3.3K	1	
R712		ERJ6GEYJ470	M.RESISTOR CH 1/10W 47	1	
R723,24		ERJ6GEYJ101	M.RESISTOR CH 1/10W 100	2	
R725		ERJ6GEYJ102	M.RESISTOR CH 1/10W 1K	1	
R726		ERJ6GEYJ470	M.RESISTOR CH 1/10W 47	1	
R727		ERJ6GEYG471	M.RESISTOR CH 1/10W 470	1	
R728,29		ERJ6GEYJ470	M.RESISTOR CH 1/10W 47	2	
R730		ERJ6GEYG471	M.RESISTOR CH 1/10W 470	1	
R731		ERJ6GEYJ222	M.RESISTOR CH 1/10W 2.2K	1	
R732,33		ERJ6GEYG391	M.RESISTOR CH 1/10W 390	2	
R734		ERJ6GEYJ222	M.RESISTOR CH 1/10W 2.2K	1	
R735		ERJ6GEYJ470	M.RESISTOR CH 1/10W 47	1	
R736		ERJ6GEYJ271	M.RESISTOR CH 1/10W 270	1	
R737		ERJ6GEYJ102	M.RESISTOR CH 1/10W 1K	1	
R738		ERJ6GEYJ821	M.RESISTOR CH 1/10W 820	1	
R739		ERJ6GEYJ470	M.RESISTOR CH 1/10W 47	1	
R740		ERJ6GEYJ222	M.RESISTOR CH 1/10W 2.2K	1	
R741		ERJ6GEYJ102	M.RESISTOR CH 1/10W 1K	1	
R742		ERJ6GEYG331	M.RESISTOR CH 1/10W 330	1	

Ref.No.		Part No.	Part Name & Description	Pcs	Remarks
R743		ERJ6GEYJ153	M.RESISTOR CH 1/10W 15K	1	
R744		ERJ6GEYJ473	M.RESISTOR CH 1/10W 47K	1	
R745,46		ERJ6GEYJ220	M.RESISTOR CH 1/10W 22	2	
R747		ERJ6GEYJ470	M.RESISTOR CH 1/10W 47	1	
R748		ERJ6GEYJ152	M.RESISTOR CH 1/10W 1.5K	1	
R749		ERJ6GEYJ221	M.RESISTOR CH 1/10W 220	1	
R750		ERJ6GEYJ102	M.RESISTOR CH 1/10W 1K	1	
R751		ERJ6GEYJ221	M.RESISTOR CH 1/10W 220	1	
R752		ERJ6GEYJ222	M.RESISTOR CH 1/10W 2.2K	1	
R753		ERJ6GEYJ472	M.RESISTOR CH 1/10W 4.7K	1	
R754		ERJ6GEYJ103	M.RESISTOR CH 1/10W 10K	1	
R755		ERJ6GEYJ472	M.RESISTOR CH 1/10W 4.7K	1	
R756		ERJ6GEYJ682	M.RESISTOR CH 1/10W 6.8K	1	
R760,61		ERJ6GEYJ470	M.RESISTOR CH 1/10W 47	2	
R762		ERJ6GEYJ472	M.RESISTOR CH 1/10W 4.7K	1	
R763		ERJ6GEYJ152	M.RESISTOR CH 1/10W 1.5K	1	
R764-67		ERJ6GEYG621	M.RESISTOR CH 1/10W 620	4	
R768		ERJ6GEYJ152	M.RESISTOR CH 1/10W 1.5K	1	
R769		ERJ6GEYJ562	M.RESISTOR CH 1/10W 5.6K	1	
R770		ERJ6GEYG331	M.RESISTOR CH 1/10W 330	1	
R771		ERJ6GEYJ332	M.RESISTOR CH 1/10W 3.3K	1	
R772		ERJ6GEYJ470	M.RESISTOR CH 1/10W 47	1	
R773		ERJ6GEYJ102	M.RESISTOR CH 1/10W 1K	1	
R774		ERJ6GEYJ681	M.RESISTOR CH 1/10W 680	1	
R775		ERJ6GEYJ102	M.RESISTOR CH 1/10W 1K	1	
R776		ERJ6GEYJ152	M.RESISTOR CH 1/10W 1.5K	1	
R777		ERJ6GEYJ470	M.RESISTOR CH 1/10W 47	1	
R778		ERJ6GEYJ221	M.RESISTOR CH 1/10W 220	1	
R779,80		ERJ6GEYJ222	M.RESISTOR CH 1/10W 2.2K	2	
R781		ERJ6GEYG331	M.RESISTOR CH 1/10W 330	1	
R782		ERJ6GEYJ332	M.RESISTOR CH 1/10W 3.3K	1	
R783		ERJ6GEYJ470	M.RESISTOR CH 1/10W 47	1	
R784		ERJ6GEYJ102	M.RESISTOR CH 1/10W 1K	1	
R785		ERJ6GEYJ471	M.RESISTOR CH 1/10W 470	1	
R786		ERJ6GEYJ102	M.RESISTOR CH 1/10W 1K	1	
R787		ERJ6GEYJ222	M.RESISTOR CH 1/10W 2.2K	1	
R788,89		ERJ6GEYJ470	M.RESISTOR CH 1/10W 47	2	
R790~97		ERJ6GEYJ102	M.RESISTOR CH 1/10W 1K	8	
R798,99		ERJ6GEYJ332	M.RESISTOR CH 1/10W 3.3K	2	
R800		ERJ6GEYJ101	M.RESISTOR CH 1/10W 100	1	
R801,02		ERJ6GEYJ471	M.RESISTOR CH 1/10W 470	2	
R803		ERJ6GEYJ470	M.RESISTOR CH 1/10W 47	1	
R804,05		ERJ6GEYJ681	M.RESISTOR CH 1/10W 680	2	
R806,07		ERJ6GEYJ101	M.RESISTOR CH 1/10W 100	2	
R808		ERJ6GEYJ470	M.RESISTOR CH 1/10W 47	1	
R809		ERJ6GEYJ151	M.RESISTOR CH 1/10W 150	1	
R810,11		ERJ6GEYJ222	M.RESISTOR CH 1/10W 2.2K	2	
R812		ERJ6GEYJ470	M.RESISTOR CH 1/10W 47	1	
R813,14		ERJ6GEYJ222	M.RESISTOR CH 1/10W 2.2K	2	
R815,16		ERJ6GEYJ470	M.RESISTOR CH 1/10W 47	2	
R817-28		ERJ6GEYJ102	M.RESISTOR CH 1/10W 1K	12	
R829		ERJ6GEYJ683	M.RESISTOR CH 1/10W 68K	1	
R830,31		ERJ6GEYJ103	M.RESISTOR CH 1/10W 10K	2	
R832,33		ERJ6GEYJ150	M.RESISTOR CH 1/10W 15	2	
R834,35		ERJ6GEYJ332	M.RESISTOR CH 1/10W 3.3K	2	
R836		ERJ6GEYJ101	M.RESISTOR CH 1/10W 100	1	
R837		ERDS2TJ222	C.RESISTOR 1/4W 2.2K	1	
R838-40		ERJ6GEYJ102	M.RESISTOR CH 1/10W 1K	3	
R841		ERJ6GEYJ471	M.RESISTOR CH 1/10W 470	1	
R842		ERJ6GEYJ222	M.RESISTOR CH 1/10W 2.2K	1	
R843,44		ERJ6GEYJ471	M.RESISTOR CH 1/10W 470	2	
R845		ERJ6GEYJ470	M.RESISTOR CH 1/10W 47	1	
R846,47		ERJ6GEYJ333	M.RESISTOR CH 1/10W 33K	2	
R848,49		ERJ6GEYJ102	M.RESISTOR CH 1/10W 1K	2	
R850		ERJ6GEYJ222	M.RESISTOR CH 1/10W 2.2K	1	
R851		ERJ6GEYJ221	M.RESISTOR CH 1/10W 220	1	
R852		ERJ6GEYJ392	M.RESISTOR CH 1/10W 3.9K	1	
R853		ERJ6GEYJ470	M.RESISTOR CH 1/10W 47	1	
R854		ERJ6GEYJ151	M.RESISTOR CH 1/10W 150	1	
R855		ERJ6GEYJ152	M.RESISTOR CH 1/10W 1.5K	1	
R856,57		ERJ6GEYJ101	M.RESISTOR CH 1/10W 100	2	
R858		ERJ6GEYJ222	M.RESISTOR CH 1/10W 2.2K	1	
R859		ERJ6GEYJ102	M.RESISTOR CH 1/10W 1K	1	
R860		ERJ6GEYJ101	M.RESISTOR CH 1/10W 100	1	
R861		ERJ6GEYJ332	M.RESISTOR CH 1/10W 3.3K	1	

Refer to the P.C.BOARDS LIST, page 6-1-1, before using this page.

Ref.No.		Part No.	Part Name & Description	Pcs	Remarks
R862		ERJ6GEYJ223	M.RESISTOR CH 1/10W 22K	1	
R863		ERJ6GEYJ332	M.RESISTOR CH 1/10W 3.3K	1	
R864		ERJ6GEYJ472	M.RESISTOR CH 1/10W 4.7K	1	
R865		ERJ6GEYJ103	M.RESISTOR CH 1/10W 10K	1	
R866		ERJ6GEYJ683	M.RESISTOR CH 1/10W 68K	1	
R867		ERJ6GEYJ473	M.RESISTOR CH 1/10W 47K	1	
R869		ERJ6GEYJ471	M.RESISTOR CH 1/10W 470	1	
R871		ERJ6GEYJ221	M.RESISTOR CH 1/10W 220	1	
R872		ERJ6GEYJ392	M.RESISTOR CH 1/10W 3.9K	1	
R873		VRE0034E27B	M.RESISTOR CH 1/10W 1.87K	1	
R874		VRE0034E751	M.RESISTOR CH 1/10W 750	1	
R875		ERJ6GEYJ332	M.RESISTOR CH 1/10W 3.3K	1	
R876		ERJ6GEYJ152	M.RESISTOR CH 1/10W 1.5K	1	
R877		ERJ6GEYJ102	M.RESISTOR CH 1/10W 1K	1	
R878		ERJ6GEYG301	M.RESISTOR CH 1/10W 300	1	
R879		ERJ6GEYG471	M.RESISTOR CH 1/10W 470	1	
R880		ERJ6GEYJ332	M.RESISTOR CH 1/10W 3.3K	1	
R881		ERJ6GEYJ101	M.RESISTOR CH 1/10W 100	1	
R882		ERJ6GEYJ151	M.RESISTOR CH 1/10W 150	1	
R883		VRE0034E26A	M.RESISTOR CH 1/10W 182	1	
R884		ERJ6GEYJ331	M.RESISTOR CH 1/10W 330	1	
R885		VRE0034E89A	M.RESISTOR CH 1/10W 825	1	
R886,87		ERJ6GEYJ470	M.RESISTOR CH 1/10W 47	2	
R888		VRE0034E21B	M.RESISTOR CH 1/10W 1.62K	1	
R889		ERJ6GEYJ681	M.RESISTOR CH 1/10W 680	1	
R890		ERJ6GEYJ273	M.RESISTOR CH 1/10W 27K	1	
R891		ERJ6GEYJ183	M.RESISTOR CH 1/10W 18K	1	
R892		ERJ6GEYJ221	M.RESISTOR CH 1/10W 220	1	
R893		ERJ6GEYJ273	M.RESISTOR CH 1/10W 27K	1	
R894		ERJ6GEYJ183	M.RESISTOR CH 1/10W 18K	1	
R895		ERJ6GEYJ221	M.RESISTOR CH 1/10W 220	1	
R896		ERJ6GEYG243	M.RESISTOR CH 1/10W 24K	1	
R908		ERJ6GEYJ470	M.RESISTOR CH 1/10W 47	1	
R909		ERJ6GEYJ472	M.RESISTOR CH 1/10W 4.7K	1	
R910		ERJ6GEYJ473	M.RESISTOR CH 1/10W 47K	1	
R911		ERJ6GEYJ332	M.RESISTOR CH 1/10W 3.3K	1	
R912		ERJ6GEYJ471	M.RESISTOR CH 1/10W 470	1	
R913		ERJ6GEYJ102	M.RESISTOR CH 1/10W 1K	1	
R914		ERJ6GEYJ472	M.RESISTOR CH 1/10W 4.7K	1	
R915		ERJ6GEYJ122	M.RESISTOR CH 1/10W 1.2K	1	
R916		ERDS2TJ152	C.RESISTOR 1/4W 1.5K	1	
R917		ERJ6GEYJ470	M.RESISTOR CH 1/10W 47	1	
R964		ERJ6GEYJ101	M.RESISTOR CH 1/10W 100	1	
R965		ERJ6GEYJ102	M.RESISTOR CH 1/10W 1K	1	
R966-68		ERJ6GEYJ103	M.RESISTOR CH 1/10W 10K	3	
R969,70		ERJ6GEYJ472	M.RESISTOR CH 1/10W 4.7K	2	
R971		ERJ6GEYJ223	M.RESISTOR CH 1/10W 22K	1	
R972		ERJ6GEYJ331	M.RESISTOR CH 1/10W 330	1	
R974		ERJ6GEY0R00	M.RESISTOR CH 1/10W 0	1	
R986		ERDS2TJ331	C.RESISTOR 1/4W 330	1	
SW301,02		VJP1990	CONNECTOR	2	
SW304		VSS0126	SWITCH	1	
SW701,02		VJP1990	CONNECTOR	2	
SW704		VSS0126	SWITCH	1	
SW301S		VJS1990	CONNECTOR	1	
SW302S		VJS1990	CONNECTOR	1	
SW701S		VJS1990	CONNECTOR	1	
SW702S		VJS1990	CONNECTOR	1	
TP301,02		VJR0582	PACK PIN	2	
TP307-11		VJR0582	PACK PIN	5	
TP315,16		VJR0582	PACK PIN	2	
TP701-08		VJR0582	PACK PIN	8	
TPG301-03		VJR0582	PACK PIN	3	
TPG701-03		VJR0582	PACK PIN	3	
VC301		ECV1ZW10X53T	V.CAPACITOR 10P	1	
VC701		ECV1ZW20X53T	V.CAPACITOR 20P	1	

Ref.No.		Part No.	Part Name & Description	Pcs	Remarks
VL301		EIR7QF016B	COIL	1	
VL701		EIR7QF016B	COIL	1	
VL702		EIR7QF015B	COIL	1	
VR301		VRV0109B501	V.RESISTOR 500	1	
VR302		VRV0109B102	V.RESISTOR 1K	1	
VR303		VRV0109B501	V.RESISTOR 500	1	
VR304		VRV0109B102	V.RESISTOR 1K	1	
VR309		VRV0109B101	V.RESISTOR 100	1	
VR310		VRV0109B502	V.RESISTOR 5K	1	
VR311		VRV0109B501	V.RESISTOR 500	1	
VR312		VRV0064B104	V.RESISTOR 500K	1	
VR315,16		VRV0064B502	V.RESISTOR 5K	2	
VR317		VRV0109B501	V.RESISTOR 500	1	
VR318		VRV0109B203	V.RESISTOR 20K	1	
VR319,20		VRV0109B102	V.RESISTOR 1K	2	
VR321		VRV0109B203	V.RESISTOR 20K	1	
VR322		VRV0109B102	V.RESISTOR 1K	1	
VR323		VRV0109B203	V.RESISTOR 20K	1	
VR324		VRV0109B102	V.RESISTOR 1K	1	
VR701,02		VRV0109B501	V.RESISTOR 500	2	
VR709		VRV0109B501	V.RESISTOR 500	1	
VR712,13		VRV0064B502	V.RESISTOR 5K	2	
VR714		VRV0109B501	V.RESISTOR 500	1	
VR715		VRV0109B203	V.RESISTOR 20K	1	
VR716,17		VRV0109B102	V.RESISTOR 1K	2	
VR718		VRV0109B203	V.RESISTOR 20K	1	
VR719		VRV0109B102	V.RESISTOR 1K	1	
VR720		VRV0109B203	V.RESISTOR 20K	1	
VR721		VRV0109B102	V.RESISTOR 1K	1	
			MISCELLANEOUS		
		VML2143	CARD PULLER	1	
		VML2144	CARD PULLER	1	
		VMS4174	PIN	6	
		VMZ1547	BARRIER	1	
		VSC3056	SHIELD CASE	1	
		VXA3966	P.C.B. SHIELD PLATE	1	
		XNG26E	NUT	4	
		XYNV3+K6FR	SCREW	6	
		XYN26+C12	SCREW	4	

Ref.No.		Part No.	Part Name & Description	Pcs	Remarks
	■	VEP83098D	P.C.BOARD W/COMPONENT		FOR AU-63-P
			W3 MOD & DEMOD		
			CAPACITORS		
C62		ECEA1CU470	E.CAPACITOR 16V 47U	1	
C63		ECEA1CU101	E.CAPACITOR 16V 100U	1	
C64		ECUM1E104ZFN	C.CAPACITOR CH 25V 0.1U	1	
C65		ECEA1CU101	E.CAPACITOR 16V 100U	1	
C66		ECUM1E104ZFN	C.CAPACITOR CH 25V 0.1U	1	
C67,68		ECEA1CU101	E.CAPACITOR 16V 100U	2	
C69,70		ECEA1AU101	E.CAPACITOR 10V 100U	2	
C71		ECEA1CU470	E.CAPACITOR 16V 47U	1	
C72		ECEA1CU101	E.CAPACITOR 16V 100U	1	
C302		ECUM1H103KBN	C.CAPACITOR CH 50V 0.01U	1	
C303		ECUM1H220JCN	C.CAPACITOR CH 50V 22P	1	
C304		ECUM1H103KBN	C.CAPACITOR CH 50V 0.01U	1	
C306		ECUM1H220JCN	C.CAPACITOR CH 50V 22P	1	
C307		ECEA1AU101	E.CAPACITOR 10V 100U	1	
C308,09		ECUM1H103KBN	C.CAPACITOR CH 50V 0.01U	2	
C310		ECEA1AU101	E.CAPACITOR 10V 100U	1	
C311		ECUM1H103KBN	C.CAPACITOR CH 50V 0.01U	1	
C316		ECUM1E104ZFN	C.CAPACITOR CH 25V 0.1U	1	
C322		ECUM1E104ZFN	C.CAPACITOR CH 25V 0.1U	1	
C325		ECUM1E104ZFN	C.CAPACITOR CH 25V 0.1U	1	
C342		ECUM1H103KBN	C.CAPACITOR CH 50V 0.01U	1	
C343		ECUM1H120JCN	C.CAPACITOR CH 50V 12P	1	
C344		ECUM1H121JCN	C.CAPACITOR CH 50V 120P	1	
C345		ECUM1H100DCN	C.CAPACITOR CH 50V 10P	1	
C346		ECUM1H103KBN	C.CAPACITOR CH 50V 0.01U	1	
C347,48		ECEA1AU101	E.CAPACITOR 10V 100U	2	
C349		ECUM1H103KBN	C.CAPACITOR CH 50V 0.01U	1	
C350		ECUM1H181JCN	C.CAPACITOR CH 50V 180P	1	
C351		ECUM1H221JCN	C.CAPACITOR CH 50V 220P	1	
C352		ECUM1H103KBN	C.CAPACITOR CH 50V 0.01U	1	
C353		ECUM1H101JCN	C.CAPACITOR CH 50V 100P	1	
C354,55		ECUM1H103KBN	C.CAPACITOR CH 50V 0.01U	2	
C356		ECUM1E104ZFN	C.CAPACITOR CH 25V 0.1U	1	
C357		ECEA1HU2R2	E.CAPACITOR 50V 2.2U	1	
C358		ECEA1AU101	E.CAPACITOR 10V 100U	1	
C359		ECUM1H103KBN	C.CAPACITOR CH 50V 0.01U	1	
C360		ECUM1H330JCN	C.CAPACITOR CH 50V 33P	1	
C363		ECUM1E104ZFN	C.CAPACITOR CH 25V 0.1U	1	
C373		ECEA1AU101	E.CAPACITOR 10V 100U	1	
C374		ECUM1H103KBN	C.CAPACITOR CH 50V 0.01U	1	
C375		ECEA1AU101	E.CAPACITOR 10V 100U	1	
C376		ECUM1H103KBN	C.CAPACITOR CH 50V 0.01U	1	
C380		ECUM1E104ZFN	C.CAPACITOR CH 25V 0.1U	1	
C381		ECUM1H103KBN	C.CAPACITOR CH 50V 0.01U	1	
C382		ECUM1E104ZFN	C.CAPACITOR CH 25V 0.1U	1	
C383		ECEA1AU101	E.CAPACITOR 10V 100U	1	
C384		ECUM1H103KBN	C.CAPACITOR CH 50V 0.01U	1	
C386		ECUM1H050DCN	C.CAPACITOR CH 50V 50P	1	
C387		ECUM1H560JCN	C.CAPACITOR CH 50V 56P	1	
C388		ECUM1H121JCN	C.CAPACITOR CH 50V 120P	1	
C389		ECUM1H103KBN	C.CAPACITOR CH 50V 0.01U	1	
C390		ECUM1H101JCN	C.CAPACITOR CH 50V 100P	1	
C391		ECUM1H100DCN	C.CAPACITOR CH 50V 10P	1	
C392		ECUM1H103KBN	C.CAPACITOR CH 50V 0.01U	1	
C393		ECEA1AU101	E.CAPACITOR 10V 100U	1	
C394		ECUM1H103KBN	C.CAPACITOR CH 50V 0.01U	1	
C395		ECUM1E104ZFN	C.CAPACITOR CH 25V 0.1U	1	
C396,97		ECUM1H103KBN	C.CAPACITOR CH 50V 0.01U	2	
C398		ECUM1H150JCN	C.CAPACITOR CH 50V 15P	1	
C399		ECUM1H103KBN	C.CAPACITOR CH 50V 0.01U	1	
C400		ECUM1E104ZFN	C.CAPACITOR CH 25V 0.1U	1	
C401-03		ECUM1H103KBN	C.CAPACITOR CH 50V 0.01U	3	
C404		ECEA1AU101	E.CAPACITOR 10V 100U	1	
C405-07		ECUM1E104ZFN	C.CAPACITOR CH 25V 0.1U	3	

Ref.No.		Part No.	Part Name & Description	Pcs	Remarks
C408,09		ECUM1H330JCN	C.CAPACITOR CH 50V 33P	2	
C410		ECEA1AU471	E.CAPACITOR 10V 470U	1	
C411		ECUM1E104ZFN	C.CAPACITOR CH 25V 0.1U	1	
C412		ECUM1H221JCN	C.CAPACITOR CH 50V 220P	1	
C413		ECEA1AU101	E.CAPACITOR 10V 100U	1	
C414		ECUM1H470JCN	P.CAPACITOR 50V 47P	1	
C415		ECUM1H180JCN	C.CAPACITOR CH 50V 18P	1	
C416		ECUM1H181JCN	C.CAPACITOR CH 50V 180P	1	
C417,18		ECUM1E104ZFN	C.CAPACITOR CH 25V 0.1U	2	
C419		ECUM1H331JCN	C.CAPACITOR CH 50V 330P	1	
C420		ECUM1H220JCN	C.CAPACITOR CH 50V 22P	1	
C421		ECUM1H680JCN	C.CAPACITOR CH 50V 68P	1	
C422		ECUM1H330JCN	C.CAPACITOR CH 50V 33P	1	
C423		ECEA1AU101	E.CAPACITOR 10V 100U	1	
C424		ECEA1CU100	E.CAPACITOR 16V 10U	1	
C425		ECUM1H221JCN	C.CAPACITOR CH 50V 220P	1	
C426		VCMO044	M.CAPACITOR 130P	1	
C427		VCMO023	M.CAPACITOR 379P	1	
C428		ECUM1H680JCN	C.CAPACITOR CH 50V 68P	1	
C432		ECEA1AU221	E.CAPACITOR 10V 220U	1	
C433		ECUM1H050DCN	C.CAPACITOR CH 50V 50P	1	
C434		ECUM1H220JCN	C.CAPACITOR CH 50V 22P	1	
C435		ECUM1H020CCN	C.CAPACITOR CH 50V 2P	1	
C436,37		ECUM1E104ZFN	C.CAPACITOR CH 25V 0.1U	2	
C438		VCMO023	M.CAPACITOR 379P	1	
C439		VCMO057	M.CAPACITOR 169P	1	
C440		ECUM1H100DCN	C.CAPACITOR CH 50V 10P	1	
C442,43		ECEA1CU221	E.CAPACITOR 16V 220U	2	
C444,45		ECUM1H103KBN	C.CAPACITOR CH 50V 0.01U	2	
C450		ECEA1AU101	E.CAPACITOR 10V 100U	1	
C453		ECUM1E104ZFN	C.CAPACITOR CH 25V 0.1U	1	
C467		ECUM1E104ZFN	C.CAPACITOR CH 25V 0.1U	1	
C468		ECUM1H103KBN	C.CAPACITOR CH 50V 0.01U	1	
C469		ECUM1H220JCN	C.CAPACITOR CH 50V 22P	1	
C701,02		ECUM1H103KBN	C.CAPACITOR CH 50V 0.01U	2	
C703		ECEA1AU101	E.CAPACITOR 10V 100U	1	
C704,05		ECUM1H103KBN	C.CAPACITOR CH 50V 0.01U	2	
C714		ECUM1H103KBN	C.CAPACITOR CH 50V 0.01U	1	
C725		ECCF1H180JC	C.CAPACITOR 50V 18P	1	
C726		ECUM1H103KBN	C.CAPACITOR CH 50V 0.01U	1	
C727		ECUM1E104ZFN	C.CAPACITOR CH 25V 0.1U	1	
C728		ECUM1H220JCN	C.CAPACITOR CH 50V 22P	1	
C729		ECUM1H121JCN	C.CAPACITOR CH 50V 120P	1	
C730,31		ECUM1H103KBN	C.CAPACITOR CH 50V 0.01U	2	
C732		ECUM1H101JCN	C.CAPACITOR CH 50V 100P	1	
C733		ECEA1AU101	E.CAPACITOR 10V 100U	1	
C734		ECUM1H331JCN	C.CAPACITOR CH 50V 330P	1	
C735		ECEA1AU101	E.CAPACITOR 10V 100U	1	
C736		ECUM1H103KBN	C.CAPACITOR CH 50V 0.01U	1	
C737		ECUM1H121JCN	C.CAPACITOR CH 50V 120P	1	
C738		ECUM1H103KBN	C.CAPACITOR CH 50V 0.01U	1	
C744		ECUM1E104ZFN	C.CAPACITOR CH 25V 0.1U	1	
C745		ECUM1H103KBN	C.CAPACITOR CH 50V 0.01U	1	
C746		ECUM1E104ZFN	C.CAPACITOR CH 25V 0.1U	1	
C747		ECEA1AU101	E.CAPACITOR 10V 100U	1	
C749		ECUM1H561JCN	C.CAPACITOR CH 50V 560P	1	
C750		ECUM1H331JCN	C.CAPACITOR CH 50V 330P	1	
C751		ECUM1H221JCN	C.CAPACITOR CH 50V 220P	1	
C752		ECUM1H561JCN	C.CAPACITOR CH 50V 560P	1	
C753		ECUM1H390JCN	C.CAPACITOR CH 50V 39P	1	
C754		ECUM1H181JCN	C.CAPACITOR CH 50V 180P	1	
C755		ECUM1H330JCN	C.CAPACITOR CH 50V 33P	1	
C756		ECUM1H101JCN	C.CAPACITOR CH 50V 100P	1	
C757		ECUM1H330JCN	C.CAPACITOR CH 50V 33P	1	
C758		ECUM1H050DCN	C.CAPACITOR CH 50V 50P	1	
C759		ECUM1E104ZFN	C.CAPACITOR CH 25V 0.1U	1	
C760		ECUM1H680JCN	C.CAPACITOR CH 50V 68P	1	
C761		ECUM1H121JCN	C.CAPACITOR CH 50V 120P	1	
C762		ECUM1H103KBN	C.CAPACITOR CH 50V 0.01U	1	
C763		ECUM1H121JCN	C.CAPACITOR CH 50V 120P	1	
C764		ECUM1H100DCN	C.CAPACITOR CH 50V 10P	1	
C765,66		ECUM1H103KBN	C.CAPACITOR CH 50V 0.01U	2	
C767		ECEA1AU101	E.CAPACITOR 10V 100U	1	
C768,69		ECUM1H103KBN	C.CAPACITOR CH 50V 0.01U	2	
C770		ECUM1H150JCN	C.CAPACITOR CH 50V 15P	1	

Refer to the P.C.BOARDS LIST, page 6-1-1, before using this page.

Ref.No.	Part No.	Part Name & Description	Pcs	Remarks
C771	ECUM1H681JCN	C.CAPACITOR CH 50V 680P	1	
C772	ECUM1E104ZFN	C.CAPACITOR CH 25V 0.1U	1	
C773-75	ECUM1H103KBN	C.CAPACITOR CH 50V 0.01U	3	
C776	ECUM1E104ZFN	C.CAPACITOR CH 25V 0.1U	1	
C777	ECEA1AU101	E.CAPACITOR 10V 100U	1	
C778,79	ECUM1E104ZFN	C.CAPACITOR CH 25V 0.1U	2	
C780,81	ECUM1H470JCN	P.CAPACITOR 50V 47P	2	
C782	ECEA1AU471	E.CAPACITOR 10V 470U	1	
C783	ECUM1E104ZFN	C.CAPACITOR CH 25V 0.1U	1	
C784	ECUM1H221JCN	C.CAPACITOR CH 50V 220P	1	
C785	ECEA1AU101	E.CAPACITOR 10V 100U	1	
C786	ECUM1H121JCN	C.CAPACITOR CH 50V 120P	1	
C787	ECUM1H100DCN	C.CAPACITOR CH 50V 10P	1	
C788	ECUM1H331JCN	C.CAPACITOR CH 50V 330P	1	
C789,90	ECUM1E104ZFN	C.CAPACITOR CH 25V 0.1U	2	
C791	ECUM1H331JCN	C.CAPACITOR CH 50V 330P	1	
C792	ECUM1H220JCN	C.CAPACITOR CH 50V 22P	1	
C793	ECUM1H680JCN	C.CAPACITOR CH 50V 68P	1	
C794	ECUM1H330JCN	C.CAPACITOR CH 50V 33P	1	
C796	ECEA1CU100	E.CAPACITOR 16V 10U	1	
C797	VCM0046	M.CAPACITOR 229P	1	
C798	ECUM1H100DCN	C.CAPACITOR CH 50V 10P	1	
C799	ECEA1AU221	E.CAPACITOR 10V 220U	1	
C800	ECUM1H050DCN	C.CAPACITOR CH 50V 50P	1	
C801	ECUM1H020CCN	C.CAPACITOR CH 50V 2P	1	
C802	ECUM1H121JCN	C.CAPACITOR CH 50V 120P	1	
C803,04	ECUM1E104ZFN	C.CAPACITOR CH 25V 0.1U	2	
C805	ECUM1H100DCN	C.CAPACITOR CH 50V 10P	1	
C806	VCM0057	M.CAPACITOR 169P	1	
C807	VCM0024	M.CAPACITOR 270P	1	
C808	ECEA1CU221	E.CAPACITOR 16V 220U	1	
C810	ECEA1CU221	E.CAPACITOR 16V 220U	1	
C811,12	ECUM1H103KBN	C.CAPACITOR CH 50V 0.01U	2	
C817	ECEA1AU101	E.CAPACITOR 10V 100U	1	
C818	ECUM1H220JCN	C.CAPACITOR CH 50V 22P	1	
C821	ECUM1E104ZFN	C.CAPACITOR CH 25V 0.1U	1	
D301	MA151WK	DIODE	1	
D303-05	MA151K	DIODE	3	
D306,07	MA151WK	DIODE	2	
D308,09	MA151WA	DIODE	2	
D701	MA151WK	DIODE	1	
D702-05	MA151K	DIODE	4	
D706	MA151WK	DIODE	1	
DL301	VLD0191	DELAY	1	
DL701	VLD0191	DELAY	1	
FL302	VLF0787	FILTER	1	
FL303	VLF0819	FILTER	1	
FL701	VLF0821	FILTER	1	
IC10	AN79N09	IC	1	
IC11,12	AN79M05F	IC	2	
IC13	AN78M05F	IC	1	
IC14	AN78N05	IC	1	
IC15	AN78N09	IC	1	
IC301	AN6308S	IC	1	
IC306	NJM1496M	IC	1	
IC307	UPD4053BG	IC	1	
IC309	RC082BM	IC	1	
IC311-15	10116D	IC	5	
IC316	SN74LS123NS	IC	1	
IC317	MC74HC00AF	IC	1	
IC319	NE5539D	IC	1	
IC326	RC082BM	IC	1	
IC701	AN6308S	IC	1	

Ref.No.	Part No.	Part Name & Description	Pcs	Remarks
IC705	NJM1496M	IC	1	
IC706	UPD4053BG	IC	1	
IC708-12	10116D	IC	5	
IC716	NE5539D	IC	1	
L301	VLQEL05F101K	COIL 100UH	1	
L302,03	VLQEL05S150J	COIL 15UH	2	
L304	VLQEL05F101K	COIL 100UH	1	
L308	VLQEL05S2R7J	COIL 2.7UH	1	
L309,10	VLQEL05F101K	COIL 100UH	2	
L311	VLQEL05S220J	COIL 22UH	1	
L312	VLQEL05S3R3J	COIL 3.3UH	1	
L313	VLQEL05F101K	COIL 100UH	1	
L314	VLQEL05S100J	COIL 10UH	1	
L316-18	VLQEL05F101K	COIL 100UH	3	
L320	VLQEL05S2R2J	COIL 2.2UH	1	
L321	VLQEL05S120J	COIL 12UH	1	
L322	VLQEL05S5R6J	COIL 5.6UH	1	
L323	VLQEL05F101K	COIL 100UH	1	
L324	VLQEL05SR47M	COIL	1	#L
L325-27	VLQEL05F101K	COIL 100UH	3	
L328	VLQEL05S6R8J	COIL 6.8UH	1	
L329	VLQEL05F101K	COIL 100UH	1	
L333-35	VLQEL05F101K	COIL 100UH	3	
L701	VLQEL05F101K	COIL 100UH	1	
L709	VLQEL05S4R7J	COIL 4.7UH	1	
L710	VLQEL05F101K	COIL 100UH	1	
L711	VLQEL05S560J	COIL 56UH	1	
L712	VLQEL05F101K	COIL 100UH	1	
L713	VLQEL05S3R9J	COIL 3.9UH	1	
L715	VLQEL05F101K	COIL 100UH	1	
L716	VLQEL05S181J	COIL 180UH	1	
L717	VLQEL05S680J	COIL 68UH	1	
L718	VLQEL05S3R3J	COIL 3.3UH	1	
L719,20	VLQEL05S8R2J	COIL 8.2UH	2	
L721	VLQEL05S2R2J	COIL 2.2UH	1	
L722	VLQEL05S150J	COIL 15UH	1	
L723	VLQEL05S8R2J	COIL 8.2UH	1	
L724	VLQEL05F101K	COIL 100UH	1	
L725	VLQEL05SR47M	COIL	1	#L
L726-28	VLQEL05F101K	COIL 100UH	3	
L729	VLQEL05S150J	COIL 15UH	1	
L731-33	VLQEL05F101K	COIL 100UH	3	
Q301-04	2SC2295	TRANSISTOR CHIP	4	(B,C)
Q313,14	2SC2295	TRANSISTOR CHIP	2	(B,C)
Q315	2SA1022	TRANSISTOR CHIP	1	(B,C)
Q316	2SC2295	TRANSISTOR CHIP	1	(B,C)
Q317,18	2SA1022	TRANSISTOR CHIP	2	(B,C)
Q319	IMX4	TRANSISTOR	1	
Q320	UN2113	TRANSISTOR-RESISTOR	1	
Q321,22	2SC2295	TRANSISTOR CHIP	2	(B,C)
Q323	IMX4	TRANSISTOR	1	
Q324	2SC2295	TRANSISTOR CHIP	1	(B,C)
Q325	2SA1022	TRANSISTOR CHIP	1	(B,C)
Q326	2SC2295	TRANSISTOR CHIP	1	(B,C)
Q327,28	2SA1022	TRANSISTOR CHIP	2	(B,C)
Q329	2SC2295	TRANSISTOR CHIP	1	(B,C)
Q330	2SA1022	TRANSISTOR CHIP	1	(B,C)
Q331-38	2SC2295	TRANSISTOR CHIP	8	(B,C)
Q339,40	UN2213	TRANSISTOR-RESISTOR	2	
Q341	2SA1462	TRANSISTOR	1	
Q342,43	2SC3757	TRANSISTOR	2	(Q,R)
Q344	2SC2295	TRANSISTOR CHIP	1	(B,C)
Q345	2SA1022	TRANSISTOR CHIP	1	(B,C)
Q346	2SC2480	TRANSISTOR	1	
Q347	2SA1462	TRANSISTOR	1	
Q351	2SK374	TRANSISTOR	1	
Q352	2SC3757	TRANSISTOR	1	(Q,R)
Q353	2SA1226	TRANSISTOR	1	
Q354	2SD601	TRANSISTOR CHIP	1	(Q,R)

Refer to the P.C.BOARDS LIST, page 6-1-1, before using this page.

Ref.No.		Part No.	Part Name & Description	Pcs	Remarks
Q355		2SA1022	TRANSISTOR CHIP	1	(B,C)
Q356-61		UN2113	TRANSISTOR-RESISTOR	6	
Q376		2SA1462	TRANSISTOR	1	
Q377		2SA1226	TRANSISTOR	1	
Q378		2SB709	TRANSISTOR CHIP	1	(Q,R)
Q379		2SC2480	TRANSISTOR	1	
Q382-84		2SC3757	TRANSISTOR	3	(Q,R)
Q385		2SC2295	TRANSISTOR CHIP	1	(B,C)
Q701,02		2SA1022	TRANSISTOR CHIP	2	(B,C)
Q710,11		2SC2295	TRANSISTOR CHIP	2	(B,C)
Q712		2SA1022	TRANSISTOR CHIP	1	(B,C)
Q713		2SC2295	TRANSISTOR CHIP	1	(B,C)
Q714,15		2SA1022	TRANSISTOR CHIP	2	(B,C)
Q716		2SC2295	TRANSISTOR CHIP	1	(B,C)
Q717		2SA1022	TRANSISTOR CHIP	1	(B,C)
Q718		2SC2295	TRANSISTOR CHIP	1	(B,C)
Q719,20		2SA1022	TRANSISTOR CHIP	2	(B,C)
Q721		2SC2295	TRANSISTOR CHIP	1	(B,C)
Q722		2SA1022	TRANSISTOR CHIP	1	(B,C)
Q723-30		2SC2295	TRANSISTOR CHIP	8	(B,C)
Q731		UN2213	TRANSISTOR-RESISTOR	1	
Q732		2SA1462	TRANSISTOR	1	
Q733		2SC2295	TRANSISTOR CHIP	1	(B,C)
Q734		2SA1022	TRANSISTOR CHIP	1	(B,C)
Q735		2SC2480	TRANSISTOR	1	
Q736		2SA1462	TRANSISTOR	1	
Q740		2SK374	TRANSISTOR	1	
Q741		2SC3757	TRANSISTOR	1	(Q,R)
Q742		2SA1226	TRANSISTOR	1	
Q743		2SD601	TRANSISTOR CHIP	1	(Q,R)
Q754		2SA1462	TRANSISTOR	1	
Q755		2SA1226	TRANSISTOR	1	
Q756		2SB709	TRANSISTOR CHIP	1	(Q,R)
Q757		2SC2480	TRANSISTOR	1	
Q758-60		2SC3757	TRANSISTOR	3	(Q,R)
			RESISTORS		
R20		ERJ6GEYJ472	M.RESISTOR CH 1/10W 4.7K	1	
R91		ERJ6GEYJ472	M.RESISTOR CH 1/10W 4.7K	1	
R101		ERJ6GEYJ470	M.RESISTOR CH 1/10W 47	1	
R301		ERJ6GEYJ470	M.RESISTOR CH 1/10W 47	1	
R302		ERJ6GEYJ681	M.RESISTOR CH 1/10W 680	1	
R303		ERJ6GEYJ102	M.RESISTOR CH 1/10W 1K	1	
R304		ERJ6GEYJ332	M.RESISTOR CH 1/10W 3.3K	1	
R305		ERJ6GEYJ470	M.RESISTOR CH 1/10W 47	1	
R306		ERJ6GEYJ681	M.RESISTOR CH 1/10W 680	1	
R307		ERJ6GEYJ102	M.RESISTOR CH 1/10W 1K	1	
R308		ERJ6GEYJ332	M.RESISTOR CH 1/10W 3.3K	1	
R309		ERJ6GEYJ222	M.RESISTOR CH 1/10W 2.2K	1	
R310		ERJ6GEYJ470	M.RESISTOR CH 1/10W 47	1	
R332		ERJ6GEYJ152	M.RESISTOR CH 1/10W 1.5K	1	
R333,34		ERJ6GEYG471	M.RESISTOR CH 1/10W 470	2	
R335,36		ERJ6GEYJ470	M.RESISTOR CH 1/10W 47	2	
R337,38		ERJ6GEYJ222	M.RESISTOR CH 1/10W 2.2K	2	
R339,40		ERJ6GEYJ271	M.RESISTOR CH 1/10W 270	2	
R341		ERJ6GEYJ470	M.RESISTOR CH 1/10W 47	1	
R342		ERJ6GEYJ271	M.RESISTOR CH 1/10W 270	1	
R343		ERJ6GEYJ821	M.RESISTOR CH 1/10W 820	1	
R344		ERJ6GEYJ470	M.RESISTOR CH 1/10W 47	1	
R345		ERJ6GEYJ222	M.RESISTOR CH 1/10W 2.2K	1	
R346		ERJ6GEYJ102	M.RESISTOR CH 1/10W 1K	1	
R347		ERJ6GEYG331	M.RESISTOR CH 1/10W 330	1	
R348		ERJ6GEYJ153	M.RESISTOR CH 1/10W 15K	1	
R349		ERJ6GEYJ333	M.RESISTOR CH 1/10W 33K	1	
R350,51		ERJ6GEYJ220	M.RESISTOR CH1/10W 22	2	
R352		ERJ6GEYJ470	M.RESISTOR CH 1/10W 47	1	
R353		ERJ6GEYJ152	M.RESISTOR CH 1/10W 1.5K	1	
R354		ERJ6GEYJ221	M.RESISTOR CH 1/10W 220	1	
R355		ERJ6GEYJ102	M.RESISTOR CH 1/10W 1K	1	
R356		ERJ6GEYJ221	M.RESISTOR CH 1/10W 220	1	
R357		ERJ6GEYJ222	M.RESISTOR CH 1/10W 2.2K	1	
R358		ERJ6GEYJ101	M.RESISTOR CH 1/10W 100	1	
R359		ERJ6GEYJ472	M.RESISTOR CH 1/10W 4.7K	1	

Ref.No.		Part No.	Part Name & Description	Pcs	Remarks
R360,61		ERJ6GEYJ473	M.RESISTOR CH 1/10W 47K	2	
R362		ERJ6GEYJ472	M.RESISTOR CH 1/10W 4.7K	1	
R363		ERJ6GEYJ223	M.RESISTOR CH 1/10W 22K	1	
R364		ERJ6GEYJ273	M.RESISTOR CH1/10W 27K	1	
R365		ERJ6GEYJ473	M.RESISTOR CH 1/10W 47K	1	
R366		ERJ6GEYJ223	M.RESISTOR CH 1/10W 22K	1	
R367		ERJ6GEYJ104	M.RESISTOR CH 1/10W 100K	1	
R368		ERJ6GEYJ472	M.RESISTOR CH 1/10W 4.7K	1	
R369		ERJ6GEYJ103	M.RESISTOR CH 1/10W 10K	1	
R370		ERJ6GEYJ223	M.RESISTOR CH 1/10W 22K	1	
R371		ERJ6GEYJ682	M.RESISTOR CH 1/10W 6.8K	1	
R372		ERJ6GEYJ470	M.RESISTOR CH 1/10W 47	1	
R373		ERJ6GEYJ681	M.RESISTOR CH 1/10W 680	1	
R374		ERJ6GEYJ151	M.RESISTOR CH 1/10W 150	1	
R375		ERJ6GEYJ470	M.RESISTOR CH 1/10W 47	1	
R386		ERJ6GEYJ103	M.RESISTOR CH 1/10W 10K	1	
R387,88		ERJ6GEYJ473	M.RESISTOR CH 1/10W 47K	2	
R389		ERJ6GEYJ103	M.RESISTOR CH 1/10W 10K	1	
R390		ERJ6GEYJ472	M.RESISTOR CH 1/10W 4.7K	1	
R391		ERJ6GEYJ474	M.RESISTOR CH 1/10W 470K	1	
R392		ERJ6GEYJ473	M.RESISTOR CH 1/10W 47K	1	
R393		ERJ6GEYJ471	M.RESISTOR CH 1/10W 470	1	
R397,98		ERJ6GEYJ470	M.RESISTOR CH 1/10W 47	2	
R399		ERJ6GEYJ472	M.RESISTOR CH 1/10W 4.7K	1	
R400		ERJ6GEYJ152	M.RESISTOR CH 1/10W 1.5K	1	
R401-04		ERJ6GEYG621	M.RESISTOR CH 1/10W 620	4	
R405		ERJ6GEYJ152	M.RESISTOR CH 1/10W 1.5K	1	
R406		ERJ6GEYJ562	M.RESISTOR CH 1/10W 5.6K	1	
R407		ERJ6GEYG301	M.RESISTOR CH 1/10W 300	1	
R409		ERJ6GEYJ470	M.RESISTOR CH 1/10W 47	1	
R410		ERJ6GEYJ102	M.RESISTOR CH 1/10W 1K	1	
R411		ERJ6GEYJ681	M.RESISTOR CH 1/10W 680	1	
R412		ERJ6GEYJ102	M.RESISTOR CH 1/10W 1K	1	
R413		ERJ6GEYJ152	M.RESISTOR CH 1/10W 1.5K	1	
R414		ERJ6GEYJ470	M.RESISTOR CH 1/10W 47	1	
R415		ERJ6GEYJ221	M.RESISTOR CH 1/10W 220	1	
R416,17		ERJ6GEYJ222	M.RESISTOR CH 1/10W 2.2K	2	
R418		ERJ6GEYG331	M.RESISTOR CH 1/10W 330	1	
R419		ERJ6GEYJ332	M.RESISTOR CH 1/10W 3.3K	1	
R420		ERJ6GEYJ470	M.RESISTOR CH 1/10W 47	1	
R421		ERJ6GEYJ102	M.RESISTOR CH 1/10W 1K	1	
R422		ERJ6GEYJ471	M.RESISTOR CH 1/10W 470	1	
R423		ERJ6GEYJ102	M.RESISTOR CH 1/10W 1K	1	
R424		ERJ6GEYJ222	M.RESISTOR CH 1/10W 2.2K	1	
R425,26		ERJ6GEYJ470	M.RESISTOR CH 1/10W 47	2	
R427-34		ERJ6GEYJ102	M.RESISTOR CH 1/10W 1K	8	
R435,36		ERJ6GEYJ332	M.RESISTOR CH 1/10W 3.3K	2	
R437		ERJ6GEYJ101	M.RESISTOR CH 1/10W 100	1	
R438,39		ERJ6GEYJ471	M.RESISTOR CH 1/10W 470	2	
R440		ERJ6GEYJ470	M.RESISTOR CH 1/10W 47	1	
R441,42		ERJ6GEYJ681	M.RESISTOR CH 1/10W 680	2	
R443,44		ERJ6GEYJ101	M.RESISTOR CH 1/10W 100	2	
R445		ERJ6GEYJ470	M.RESISTOR CH 1/10W 47	1	
R446		ERJ6GEYJ151	M.RESISTOR CH 1/10W 150	1	
R447,48		ERJ6GEYJ222	M.RESISTOR CH 1/10W 2.2K	2	
R449		ERJ6GEYJ470	M.RESISTOR CH 1/10W 47	1	
R450,51		ERJ6GEYJ222	M.RESISTOR CH 1/10W 2.2K	2	
R452,53		ERJ6GEYJ470	M.RESISTOR CH 1/10W 47	2	
R454-65		ERJ6GEYJ102	M.RESISTOR CH 1/10W 1K	12	
R466		ERJ6GEYJ683	M.RESISTOR CH 1/10W 68K	1	
R467,68		ERJ6GEYJ103	M.RESISTOR CH 1/10W 10K	2	
R469,70		ERJ6GEYJ150	M.RESISTOR CH 1/10W 15	2	
R471,72		ERJ6GEYJ332	M.RESISTOR CH 1/10W 3.3K	2	
R473		ERJ6GEYJ101	M.RESISTOR CH 1/10W 100	1	
R474		ERDS2TJ222	C.RESISTOR 1/4W 2.2K	1	
R475		ERJ6GEYJ102	M.RESISTOR CH 1/10W 1K	1	
R476		ERJ6GEYJ471	M.RESISTOR CH 1/10W 470	1	
R478		ERJ6GEYJ102	M.RESISTOR CH 1/10W 1K	1	
R479		ERJ6GEYJ222	M.RESISTOR CH 1/10W 2.2K	1	
R480,81		ERJ6GEYJ471	M.RESISTOR CH 1/10W 470	2	
R482		ERJ6GEYJ470	M.RESISTOR CH 1/10W 47	1	
R483,84		ERJ6GEYJ333	M.RESISTOR CH 1/10W 33K	2	
R485,86		ERJ6GEYJ102	M.RESISTOR CH 1/10W 1K	2	
R487		ERJ6GEYJ222	M.RESISTOR CH 1/10W 2.2K	1	
R488		ERJ6GEYJ221	M.RESISTOR CH 1/10W 220	1	

Refer to the P.C.BOARDS LIST, page 6-1-1, before using this page.

Ref.No.		Part No.	Part Name & Description	Pcs	Remarks
R489		ERJ6GEYJ392	M.RESISTOR CH 1/10W 3.9K	1	
R490		ERJ6GEYJ470	M.RESISTOR CH 1/10W 47	1	
R491		ERJ6GEYJ183	M.RESISTOR CH 1/10W 18K	1	
R492		ERJ6GEYJ151	M.RESISTOR CH 1/10W 150	1	
R493		ERJ6GEYJ152	M.RESISTOR CH 1/10W 1.5K	1	
R494,95		ERJ6GEYJ101	M.RESISTOR CH 1/10W 100	2	
R496		ERJ6GEYJ222	M.RESISTOR CH 1/10W 2.2K	1	
R497		ERJ6GEYJ102	M.RESISTOR CH 1/10W 1K	1	
R498		ERJ6GEYJ101	M.RESISTOR CH 1/10W 100	1	
R499		ERJ6GEYJ332	M.RESISTOR CH 1/10W 3.3K	1	
R500		ERJ6GEYJ223	M.RESISTOR CH 1/10W 22K	1	
R501		ERJ6GEYJ332	M.RESISTOR CH 1/10W 3.3K	1	
R502		ERJ6GEYJ472	M.RESISTOR CH 1/10W 4.7K	1	
R503		ERJ6GEYJ103	M.RESISTOR CH 1/10W 10K	1	
R504		ERJ6GEYJ683	M.RESISTOR CH 1/10W 68K	1	
R505,06		ERJ6GEYJ473	M.RESISTOR CH 1/10W 47K	2	
R507		ERJ6GEYJ471	M.RESISTOR CH 1/10W 470	1	
R509		ERJ6GEYJ221	M.RESISTOR CH 1/10W 220	1	
R510		ERJ6GEYJ392	M.RESISTOR CH 1/10W 3.9K	1	
R511		VRE0034E27B	M.RESISTOR CH 1/10W 1.87K	1	
R512		VRE0034E751	M.RESISTOR CH 1/10W 750	1	
R513		ERJ6GEYJ332	M.RESISTOR CH 1/10W 3.3K	1	
R514		ERJ6GEYJ152	M.RESISTOR CH 1/10W 1.5K	1	
R515		ERJ6GEYJ682	M.RESISTOR CH 1/10W 6.8K	1	
R516		ERJ6GEYG301	M.RESISTOR CH 1/10W 300	1	
R517		ERJ6GEY0R00	M.RESISTOR CH 1/10W 0	1	
R518		ERJ6GEYG471	M.RESISTOR CH 1/10W 470	1	
R519		ERJ6GEYJ332	M.RESISTOR CH 1/10W 3.3K	1	
R520		ERJ6GEYJ101	M.RESISTOR CH 1/10W 100	1	
R521		ERJ6GEYJ151	M.RESISTOR CH 1/10W 150	1	
R522		VRE0034E26A	M.RESISTOR CH 1/10W 182	1	
R523		ERJ6GEYJ102	M.RESISTOR CH 1/10W 1K	1	
R524		VRE0034E89A	M.RESISTOR CH 1/10W 825	1	
R525		VRE0034E21B	M.RESISTOR CH 1/10W 1.62K	1	
R526,27		ERJ6GEYJ470	M.RESISTOR CH 1/10W 47	2	
R528		ERJ6GEYJ101	M.RESISTOR CH 1/10W 100	1	
R529		ERJ6GEYJ102	M.RESISTOR CH 1/10W 1K	1	
R530		ERJ6GEYJ681	M.RESISTOR CH 1/10W 680	1	
R531,32		ERJ6GEYJ273	M.RESISTOR CH1/10W 27K	2	
R533,34		ERJ6GEYJ183	M.RESISTOR CH 1/10W 18K	2	
R535,36		ERJ6GEYJ221	M.RESISTOR CH 1/10W 220	2	
R537		ERJ6GEYG243	M.RESISTOR CH1/10W 24K	1	
R549		ERJ6GEYJ470	M.RESISTOR CH 1/10W 47	1	
R550		ERJ6GEYJ472	M.RESISTOR CH 1/10W 4.7K	1	
R551		ERJ6GEYJ473	M.RESISTOR CH 1/10W 47K	1	
R552		ERJ6GEYJ332	M.RESISTOR CH 1/10W 3.3K	1	
R553		ERJ6GEYJ471	M.RESISTOR CH 1/10W 470	1	
R554		ERJ6GEYJ102	M.RESISTOR CH 1/10W 1K	1	
R555		ERJ6GEYJ472	M.RESISTOR CH 1/10W 4.7K	1	
R556		ERJ6GEYJ122	M.RESISTOR CH1/10W 1.2K	1	
R557		ERDS2TJ152	C.RESISTOR 1/4W 1.5K	1	
R558		ERJ6GEYJ470	M.RESISTOR CH 1/10W 47	1	
R559		ERJ6GEYJ152	M.RESISTOR CH 1/10W 1.5K	1	
R560		ERJ6GEYJ470	M.RESISTOR CH 1/10W 47	1	
R561-63		ERJ6GEYJ473	M.RESISTOR CH 1/10W 47K	3	
R564		ERJ6GEYJ222	M.RESISTOR CH 1/10W 2.2K	1	
R565		ERJ6GEYJ223	M.RESISTOR CH 1/10W 22K	1	
R566		ERJ6GEYJ222	M.RESISTOR CH 1/10W 2.2K	1	
R567		ERJ6GEYJ223	M.RESISTOR CH 1/10W 22K	1	
R620		ERJ6GEYJ101	M.RESISTOR CH 1/10W 100	1	
R624-26		ERJ6GEYJ103	M.RESISTOR CH 1/10W 10K	3	
R627		ERJ6GEYJ472	M.RESISTOR CH 1/10W 4.7K	1	
R628		ERJ6GEYJ223	M.RESISTOR CH 1/10W 22K	1	
R629		ERJ6GEYJ472	M.RESISTOR CH 1/10W 4.7K	1	
R630,31		ERJ6GEYJ101	M.RESISTOR CH 1/10W 100	2	
R633		ERJ6GEYJ331	M.RESISTOR CH 1/10W 330	1	
R636		ERJ6GEYJ470	M.RESISTOR CH 1/10W 47	1	
R637		ERJ6GEYJ102	M.RESISTOR CH 1/10W 1K	1	
R638		ERJ6GEY0R00	M.RESISTOR CH 1/10W 0	1	
R639,40		ERDS2TJ331	C.RESISTOR 1/4W 330	2	
R643		ERDS2TJ331	C.RESISTOR 1/4W 330	1	
R701		ERJ6GEYJ470	M.RESISTOR CH 1/10W 47	1	
R702		ERJ6GEYJ102	M.RESISTOR CH 1/10W 1K	1	
R703		ERJ6GEYJ821	M.RESISTOR CH 1/10W 820	1	
R704		ERJ6GEY0R00	M.RESISTOR CH 1/10W 0	1	

Ref.No.		Part No.	Part Name & Description	Pcs	Remarks
R705		ERJ6GEYJ681	M.RESISTOR CH 1/10W 680	1	
R711,12		ERJ6GEYJ470	M.RESISTOR CH 1/10W 47	2	
R723,24		ERJ6GEYJ101	M.RESISTOR CH 1/10W 100	2	
R725		ERJ6GEYJ102	M.RESISTOR CH 1/10W 1K	1	
R726		ERJ6GEYJ470	M.RESISTOR CH 1/10W 47	1	
R727		ERJ6GEYG471	M.RESISTOR CH 1/10W 470	1	
R728,29		ERJ6GEYJ470	M.RESISTOR CH 1/10W 47	2	
R730		ERJ6GEYG471	M.RESISTOR CH 1/10W 470	1	
R731		ERJ6GEYJ222	M.RESISTOR CH 1/10W 2.2K	1	
R732,33		ERJ6GEYG391	M.RESISTOR CH 1/10W 390	2	
R734		ERJ6GEYJ222	M.RESISTOR CH 1/10W 2.2K	1	
R735		ERJ6GEYJ470	M.RESISTOR CH 1/10W 47	1	
R736		ERJ6GEYJ271	M.RESISTOR CH 1/10W 270	1	
R737		ERJ6GEYJ102	M.RESISTOR CH 1/10W 1K	1	
R738		ERJ6GEYJ821	M.RESISTOR CH 1/10W 820	1	
R739		ERJ6GEYJ470	M.RESISTOR CH 1/10W 47	1	
R740		ERJ6GEYJ222	M.RESISTOR CH 1/10W 2.2K	1	
R741		ERJ6GEYJ102	M.RESISTOR CH 1/10W 1K	1	
R742		ERJ6GEYG331	M.RESISTOR CH 1/10W 330	1	
R743		ERJ6GEYJ153	M.RESISTOR CH 1/10W 15K	1	
R744		ERJ6GEYJ473	M.RESISTOR CH 1/10W 47K	1	
R745,46		ERJ6GEYJ220	M.RESISTOR CH1/10W 22	2	
R747		ERJ6GEYJ470	M.RESISTOR CH 1/10W 47	1	
R748		ERJ6GEYJ152	M.RESISTOR CH 1/10W 1.5K	1	
R749		ERJ6GEYJ221	M.RESISTOR CH 1/10W 220	1	
R750		ERJ6GEYJ102	M.RESISTOR CH 1/10W 1K	1	
R751		ERJ6GEYJ221	M.RESISTOR CH 1/10W 220	1	
R752		ERJ6GEYJ222	M.RESISTOR CH 1/10W 2.2K	1	
R753		ERJ6GEYJ472	M.RESISTOR CH 1/10W 4.7K	1	
R754		ERJ6GEYJ103	M.RESISTOR CH 1/10W 10K	1	
R755		ERJ6GEYJ472	M.RESISTOR CH 1/10W 4.7K	1	
R756		ERJ6GEYJ682	M.RESISTOR CH 1/10W 6.8K	1	
R760,61		ERJ6GEYJ470	M.RESISTOR CH 1/10W 47	2	
R762		ERJ6GEYJ472	M.RESISTOR CH 1/10W 4.7K	1	
R763		ERJ6GEYJ152	M.RESISTOR CH 1/10W 1.5K	1	
R764-67		ERJ6GEYG621	M.RESISTOR CH 1/10W 620	4	
R768		ERJ6GEYJ152	M.RESISTOR CH 1/10W 1.5K	1	
R769		ERJ6GEYJ562	M.RESISTOR CH 1/10W 5.6K	1	
R770		ERJ6GEYG331	M.RESISTOR CH 1/10W 330	1	
R771		ERJ6GEYJ332	M.RESISTOR CH 1/10W 3.3K	1	
R772		ERJ6GEYJ470	M.RESISTOR CH 1/10W 47	1	
R773		ERJ6GEYJ102	M.RESISTOR CH 1/10W 1K	1	
R774		ERJ6GEYJ681	M.RESISTOR CH 1/10W 680	1	
R775		ERJ6GEYJ102	M.RESISTOR CH 1/10W 1K	1	
R776		ERJ6GEYJ152	M.RESISTOR CH 1/10W 1.5K	1	
R777		ERJ6GEYJ470	M.RESISTOR CH 1/10W 47	1	
R778		ERJ6GEYJ221	M.RESISTOR CH 1/10W 220	1	
R779,80		ERJ6GEYJ222	M.RESISTOR CH 1/10W 2.2K	2	
R781		ERJ6GEYG331	M.RESISTOR CH 1/10W 330	1	
R782		ERJ6GEYJ332	M.RESISTOR CH 1/10W 3.3K	1	
R783		ERJ6GEYJ470	M.RESISTOR CH 1/10W 47	1	
R784		ERJ6GEYJ102	M.RESISTOR CH 1/10W 1K	1	
R785		ERJ6GEYJ471	M.RESISTOR CH 1/10W 470	1	
R786		ERJ6GEYJ102	M.RESISTOR CH 1/10W 1K	1	
R787		ERJ6GEYJ222	M.RESISTOR CH 1/10W 2.2K	1	
R788,89		ERJ6GEYJ470	M.RESISTOR CH 1/10W 47	2	
R790-97		ERJ6GEYJ102	M.RESISTOR CH 1/10W 1K	8	
R798,99		ERJ6GEYJ332	M.RESISTOR CH 1/10W 3.3K	2	
R800		ERJ6GEYJ101	M.RESISTOR CH 1/10W 100	1	
R801,02		ERJ6GEYJ471	M.RESISTOR CH 1/10W 470	2	
R803		ERJ6GEYJ470	M.RESISTOR CH 1/10W 47	1	
R804,05		ERJ6GEYJ681	M.RESISTOR CH 1/10W 680	2	
R806,07		ERJ6GEYJ101	M.RESISTOR CH 1/10W 100	2	
R808		ERJ6GEYJ470	M.RESISTOR CH 1/10W 47	1	
R809		ERJ6GEYJ151	M.RESISTOR CH 1/10W 150	1	
R810,11		ERJ6GEYJ222	M.RESISTOR CH 1/10W 2.2K	2	
R812		ERJ6GEYJ470	M.RESISTOR CH 1/10W 47	1	
R813,14		ERJ6GEYJ222	M.RESISTOR CH 1/10W 2.2K	2	
R815,16		ERJ6GEYJ470	M.RESISTOR CH 1/10W 47	2	
R817-28		ERJ6GEYJ102	M.RESISTOR CH 1/10W 1K	12	
R829		ERJ6GEYJ683	M.RESISTOR CH 1/10W 68K	1	
R830,31		ERJ6GEYJ103	M.RESISTOR CH 1/10W 10K	2	
R832,33		ERJ6GEYJ150	M.RESISTOR CH 1/10W 15	2	
R834,35		ERJ6GEYJ332	M.RESISTOR CH 1/10W 3.3K	2	
R836		ERJ6GEYJ101	M.RESISTOR CH 1/10W 100	1	

Refer to the P.C.BOARDS LIST, page 6-1-1, before using this page.

Ref.No.		Part No.	Part Name & Description	Pcs	Remarks
R837		ERDS2TJ222	C.RESISTOR 1/4W 2.2K	1	
R838-40		ERJ6GEYJ102	M.RESISTOR CH 1/10W 1K	3	
R841		ERJ6GEYJ471	M.RESISTOR CH 1/10W 470	1	
R842		ERJ6GEYJ222	M.RESISTOR CH 1/10W 2.2K	1	
R843,44		ERJ6GEYJ471	M.RESISTOR CH 1/10W 470	2	
R845		ERJ6GEYJ470	M.RESISTOR CH 1/10W 47	1	
R846,47		ERJ6GEYJ333	M.RESISTOR CH 1/10W 33K	2	
R848,49		ERJ6GEYJ102	M.RESISTOR CH 1/10W 1K	2	
R850		ERJ6GEYJ222	M.RESISTOR CH 1/10W 2.2K	1	
R851		ERJ6GEYJ221	M.RESISTOR CH 1/10W 220	1	
R852		ERJ6GEYJ392	M.RESISTOR CH 1/10W 3.9K	1	
R853		ERJ6GEYJ470	M.RESISTOR CH 1/10W 47	1	
R854		ERJ6GEYJ151	M.RESISTOR CH 1/10W 150	1	
R855		ERJ6GEYJ152	M.RESISTOR CH 1/10W 1.5K	1	
R856,57		ERJ6GEYJ101	M.RESISTOR CH 1/10W 100	2	
R858		ERJ6GEYJ222	M.RESISTOR CH 1/10W 2.2K	1	
R859		ERJ6GEYJ102	M.RESISTOR CH 1/10W 1K	1	
R860		ERJ6GEYJ101	M.RESISTOR CH 1/10W 100	1	
R861		ERJ6GEYJ332	M.RESISTOR CH 1/10W 3.3K	1	
R862		ERJ6GEYJ223	M.RESISTOR CH 1/10W 22K	1	
R863		ERJ6GEYJ332	M.RESISTOR CH 1/10W 3.3K	1	
R864		ERJ6GEYJ472	M.RESISTOR CH 1/10W 4.7K	1	
R865		ERJ6GEYJ103	M.RESISTOR CH 1/10W 10K	1	
R866		ERJ6GEYJ683	M.RESISTOR CH 1/10W 68K	1	
R867		ERJ6GEYJ473	M.RESISTOR CH 1/10W 47K	1	
R869		ERJ6GEYJ471	M.RESISTOR CH 1/10W 470	1	
R871		ERJ6GEYJ221	M.RESISTOR CH 1/10W 220	1	
R872		ERJ6GEYJ392	M.RESISTOR CH 1/10W 3.9K	1	
R873		VREO034E27B	M.RESISTOR CH 1/10W 1.87K	1	
R874		VREO034E751	M.RESISTOR CH 1/10W 750	1	
R875		ERJ6GEYJ332	M.RESISTOR CH 1/10W 3.3K	1	
R876		ERJ6GEYJ152	M.RESISTOR CH 1/10W 1.5K	1	
R877		ERJ6GEYJ102	M.RESISTOR CH 1/10W 1K	1	
R878		ERJ6GEYG301	M.RESISTOR CH 1/10W 300	1	
R879		ERJ6GEYG471	M.RESISTOR CH 1/10W 470	1	
R880		ERJ6GEYJ332	M.RESISTOR CH 1/10W 3.3K	1	
R881		ERJ6GEYJ101	M.RESISTOR CH 1/10W 100	1	
R882		ERJ6GEYJ151	M.RESISTOR CH 1/10W 150	1	
R883		VREO034E26A	M.RESISTOR CH 1/10W 182	1	
R884		ERJ6GEYJ331	M.RESISTOR CH 1/10W 330	1	
R885		VREO034E89A	M.RESISTOR CH 1/10W 825	1	
R886,87		ERJ6GEYJ470	M.RESISTOR CH 1/10W 47	2	
R888		VREO034E21B	M.RESISTOR CH 1/10W 1.62K	1	
R889		ERJ6GEYJ681	M.RESISTOR CH 1/10W 680	1	
R890		ERJ6GEYJ273	M.RESISTOR CH1/10W 27K	1	
R891		ERJ6GEYJ183	M.RESISTOR CH 1/10W 18K	1	
R892		ERJ6GEYJ221	M.RESISTOR CH 1/10W 220	1	
R893		ERJ6GEYJ273	M.RESISTOR CH1/10W 27K	1	
R894		ERJ6GEYJ183	M.RESISTOR CH 1/10W 18K	1	
R895		ERJ6GEYJ221	M.RESISTOR CH 1/10W 220	1	
R896		ERJ6GEYG243	M.RESISTOR CH1/10W 24K	1	
R908		ERJ6GEYJ470	M.RESISTOR CH 1/10W 47	1	
R909		ERJ6GEYJ472	M.RESISTOR CH 1/10W 4.7K	1	
R910		ERJ6GEYJ473	M.RESISTOR CH 1/10W 47K	1	
R911		ERJ6GEYJ332	M.RESISTOR CH 1/10W 3.3K	1	
R912		ERJ6GEYJ471	M.RESISTOR CH 1/10W 470	1	
R913		ERJ6GEYJ102	M.RESISTOR CH 1/10W 1K	1	
R914		ERJ6GEYJ472	M.RESISTOR CH 1/10W 4.7K	1	
R915		ERJ6GEYJ122	M.RESISTOR CH1/10W 1.2K	1	
R916		ERDS2TJ152	C.RESISTOR 1/4W 1.5K	1	
R917		ERJ6GEYJ470	M.RESISTOR CH 1/10W 47	1	
R964		ERJ6GEYJ101	M.RESISTOR CH 1/10W 100	1	
R965		ERJ6GEYJ102	M.RESISTOR CH 1/10W 1K	1	
R966-68		ERJ6GEYJ103	M.RESISTOR CH 1/10W 10K	3	
R969,70		ERJ6GEYJ472	M.RESISTOR CH 1/10W 4.7K	2	
R971		ERJ6GEYJ223	M.RESISTOR CH 1/10W 22K	1	
R972		ERJ6GEYJ331	M.RESISTOR CH 1/10W 330	1	
R974		ERJ6GEYOROO	M.RESISTOR CH 1/10W 0	1	
R986		ERDS2TJ331	C.RESISTOR 1/4W 330	1	
SW301,02		VJP1990	CONNECTOR	2	
SW304		VSS0126	SWITCH	1	
SW701,02		VJP1990	CONNECTOR	2	

Ref.No.		Part No.	Part Name & Description	Pcs	Remarks
SW704		VSS0126	SWITCH	1	
SW301S		VJS1990	CONNECTOR	1	
SW302S		VJS1990	CONNECTOR	1	
SW701S		VJS1990	CONNECTOR	1	
SW702S		VJS1990	CONNECTOR	1	
TP301,02		VJR0582	PACK PIN	2	
TP306-11		VJR0582	PACK PIN	6	
TP315,16		VJR0582	PACK PIN	2	
TP701-08		VJR0582	PACK PIN	8	
TPG301-03		VJR0582	PACK PIN	3	
TPG701-03		VJR0582	PACK PIN	3	
VC301		ECV1ZW10X53T	V.CAPACITOR 10P	1	
VC701		ECV1ZW20X53T	V.CAPACITOR 20P	1	
VL301		EIR7QF016B	COIL	1	
VL701		EIR7QF016B	COIL	1	
VL702		EIR7QF015B	COIL	1	
VR301		VRV0109B501	V.RESISTOR 500	1	
VR302		VRV0109B102	V.RESISTOR 1K	1	
VR303		VRV0109B501	V.RESISTOR 500	1	
VR304		VRV0109B102	V.RESISTOR 1K	1	
VR309		VRV0109B101	V.RESISTOR 100	1	
VR310		VRV0109B502	V.RESISTOR 5K	1	
VR311		VRV0109B501	V.RESISTOR 500	1	
VR312		VRV0064B104	V.RESISTOR 100K	1	
VR313-16		VRV0064B502	V.RESISTOR 5K	4	
VR317		VRV0109B501	V.RESISTOR 500	1	
VR318		VRV0109B203	V.RESISTOR 20K	1	
VR319,20		VRV0109B102	V.RESISTOR 1K	2	
VR321		VRV0109B203	V.RESISTOR 20K	1	
VR322		VRV0109B102	V.RESISTOR 1K	1	
VR323		VRV0109B203	V.RESISTOR 20K	1	
VR324		VRV0109B102	V.RESISTOR 1K	1	
VR701,02		VRV0109B501	V.RESISTOR 500	2	
VR709		VRV0109B501	V.RESISTOR 500	1	
VR710,11		VRV0064B502	V.RESISTOR 5K	2	
VR714		VRV0109B501	V.RESISTOR 500	1	
VR715		VRV0109B203	V.RESISTOR 20K	1	
VR716,17		VRV0109B102	V.RESISTOR 1K	2	
VR718		VRV0109B203	V.RESISTOR 20K	1	
VR719		VRV0109B102	V.RESISTOR 1K	1	
VR720		VRV0109B203	V.RESISTOR 20K	1	
VR721		VRV0109B102	V.RESISTOR 1K	1	
			MISCELLANEOUS		
		VML2143	CARD PULLER	1	
		VML2144	CARD PULLER	1	
		VMS4174	PIN	6	
		VMZ1547	BARRIER	1	
		VSC3056	SHIELD CASE	1	
		VXA3966	P.C.B. SHIELD PLATE	1	
		XNG26E	NUT	4	
		XYNV3+K6FR	SCREW	6	
		XYN26+C12	SCREW	4	

Refer to the P.C.BOARDS LIST, page 6-1-1, before using this page.

Ref.No.		Part No.	Part Name & Description	Pcs	Remarks
	■	VEP83098E	P.C.BOARD W/COMPONENT		FOR AU-65-E,B
			W3 MOD & DEMOD		
	■	VEP80667A	P.C.BOARD W/COMPONENT		ON VEP83098E
			W3 SUB		
			CAPACITORS		
C1,C2		ECEA1CU101	E.CAPACITOR 16V 100U	2	
C1		ECUM1H080DCN	C.CAPACITOR CH 50V 8P	1	FOR VEP83098E
C2		ECUM1H820JCN	C.CAPACITOR CH 50V 82P	1	FOR VEP83098E
C3		ECUM1E104ZFN	C.CAPACITOR CH 25V 0.1U	1	
C4		ECUM1H100DCN	C.CAPACITOR CH 50V 10P	1	
C5		ECUM1H020CCN	C.CAPACITOR CH 50V 2P	1	
C6		ECUM1H080DCN	C.CAPACITOR CH 50V 80P	1	
C7		ECUM1E104ZFN	C.CAPACITOR CH 25V 0.1U	1	
C10,11		ECUM1E104ZFN	C.CAPACITOR CH 25V 0.1U	2	
C12,13		ECUM1H103KBN	C.CAPACITOR CH 50V 0.01U	2	
C14		ECEA0JU470	E.CAPACITOR 6.3V 47U	1	
C15		VCM0028	V.CAPACITOR	1	
C16		ECEA0JU470	E.CAPACITOR 6.3V 47U	1	
C17		VCM0027	V.CAPACITOR	1	
C18-20		ECUM1H120JCN	C.CAPACITOR CH 50V 12P	3	
C21		ECUM1H560JCN	C.CAPACITOR CH 50V 56P	1	
C22		ECUM1H150JCN	C.CAPACITOR CH 50V 15P	1	
C23		ECUM1H221JCN	C.CAPACITOR CH 50V 220P	1	
C24		ECUM1H104KBM	C.CAPACITOR CH 50V 0.1U	1	
C25		ECUM1C104KBN	C.CAPACITOR CH 16V 0.1U	1	
C26		ECUM1H331JCN	C.CAPACITOR CH 50V 330P	1	
C27		ECUM1E104ZFN	C.CAPACITOR CH 25V 0.1U	1	
C28		ECUM1H472KBN	C.CAPACITOR CH 50V 4700P	1	
C29,30		ECUM1E104ZFN	C.CAPACITOR CH 25V 0.1U	2	
C31		ECEA1HUR47	E.CAPACITOR 50V 0.47U	1	
C32		VCM0047	M.CAPACITOR	1	
C33		ECUM1H103KBN	C.CAPACITOR CH 50V 0.01U	1	
C34		ECEA1AU221	E.CAPACITOR 10V 220U	1	
C35		ECUM1E104ZFN	C.CAPACITOR CH 25V 0.1U	1	
C36		ECUM1H220JUN	C.CAPACITOR CH 50V 22P	1	
C37		ECUM1H103KBN	C.CAPACITOR CH 50V 0.01U	1	
C38		ECUM1E104ZFN	C.CAPACITOR CH 25V 0.1U	1	
C39		ECUM1H390JCN	C.CAPACITOR CH 50V 39P	1	
C40		ECUM1H101JCN	C.CAPACITOR CH 50V 100P	1	
C42		ECEA1CU470	E.CAPACITOR 16V 47U	1	
C43,44		ECUM1H103KBN	C.CAPACITOR CH 50V 0.01U	2	
C45,46		ECUM1E104ZFN	C.CAPACITOR CH 25V 0.1U	2	
C47		ECUM1H221JCN	C.CAPACITOR CH 50V 220P	1	
C48		ECUM1H103KBN	C.CAPACITOR CH 50V 0.01U	1	
C49		ECUM1H332KBN	C.CAPACITOR CH 50V 3300P	1	
C50,51		ECUM1H560JCN	C.CAPACITOR CH 50V 56P	2	
C52		ECUM1E104ZFN	C.CAPACITOR CH 25V 0.1U	1	
C54		ECUM1H471JCN	C.CAPACITOR CH 50V 470P	1	
C55		ECCF1H270JC	C.CAPACITOR 50V 27P	1	
C56		ECUM1E104ZFN	C.CAPACITOR CH 25V 0.1U	1	
C57		ECEA1CU101	E.CAPACITOR 16V 100U	1	
C60		ECUM1E104ZFN	C.CAPACITOR CH 25V 0.1U	1	
C61		ECEA1CU101	E.CAPACITOR 16V 100U	1	
C62		ECUM1E104ZFN	C.CAPACITOR CH 25V 0.1U	1	
C63		ECEA1CU101	E.CAPACITOR 16V 100U	1	
C64		ECUM1E104ZFN	C.CAPACITOR CH 25V 0.1U	1	
C65		ECSF1CE106	T.CAPACITOR 16V 10U	1	
C66		ECUM1E104ZFN	C.CAPACITOR CH 25V 0.1U	1	
C67		ECSF1CE106	T.CAPACITOR 16V 10U	1	
C68		ECUM1E104ZFN	C.CAPACITOR CH 25V 0.1U	1	
C69,70		ECSF1CE106	T.CAPACITOR 16V 10U	2	
C71		ECUM1E104ZFN	C.CAPACITOR CH 25V 0.1U	1	
C72		ECEA1CU101	E.CAPACITOR 16V 100U	1	
C73,74		ECUM1E104ZFN	C.CAPACITOR CH 25V 0.1U	2	
C201,02		ECEA1CU101	E.CAPACITOR 16V 100U	2	
C203		ECUM1H100DCN	C.CAPACITOR CH 50V 10P	1	
C204		ECUM1H020CCN	C.CAPACITOR CH 50V 2P	1	

Ref.No.		Part No.	Part Name & Description	Pcs	Remarks
C205,06		ECUM1E104ZFN	C.CAPACITOR CH 25V 0.1U	2	
C207		ECEA1AU101	E.CAPACITOR 10V 100U	1	
C208		VCM0028	V.CAPACITOR	1	
C209		VCM0027	V.CAPACITOR	1	
C210-12		ECUM1H120JCN	C.CAPACITOR CH 50V 12P	3	
C215		ECUM1H180JCN	C.CAPACITOR CH 50V 18P	1	
C216		ECUM1H560JCN	C.CAPACITOR CH 50V 56P	1	
C217		ECUM1H103KBN	C.CAPACITOR CH 50V 0.01U	1	
C218,19		ECUM1E104ZFN	C.CAPACITOR CH 25V 0.1U	2	
C220,21		ECUM1H103KBN	C.CAPACITOR CH 50V 0.01U	2	
C222		ECEA1HUR47	E.CAPACITOR 50V 0.47U	1	
C223		ECUM1E104ZFN	C.CAPACITOR CH 25V 0.1U	1	
C224		ECUM1H271JCN	C.CAPACITOR CH 50V 270P	1	
C225		ECUM1H560JCN	C.CAPACITOR CH 50V 56P	1	
C226		VCM0023	M.CAPACITOR 379P	1	
C227		ECUM1E104ZFN	C.CAPACITOR CH 25V 0.1U	1	
C228		ECUM1H103KBN	C.CAPACITOR CH 50V 0.01U	1	
C229		ECEA1AU221	E.CAPACITOR 10V 220U	1	
C230		ECUM1E104ZFN	C.CAPACITOR CH 25V 0.1U	1	
C231		ECUM1H220JUN	C.CAPACITOR CH 50V 22P	1	
C232		ECUM1H103KBN	C.CAPACITOR CH 50V 0.01U	1	
C233		ECUM1H100DCN	C.CAPACITOR CH 50V 10P	1	
C234		ECUM1H220JCN	C.CAPACITOR CH 50V 22P	1	
C235		ECUM1H560JCN	C.CAPACITOR CH 50V 56P	1	
C236		ECUM1H060DCN	C.CAPACITOR CH 50V 6P	1	
C237		ECUM1H220JCN	C.CAPACITOR CH 50V 22P	1	
C238		ECUM1H180JCN	C.CAPACITOR CH 50V 18P	1	
C239		ECUM1H121JCN	C.CAPACITOR CH 50V 120P	1	
C240		ECUM1H100DCN	C.CAPACITOR CH 50V 10P	1	
C241		ECUM1H220JCN	C.CAPACITOR CH 50V 22P	1	
C242		ECUM1H221JCN	C.CAPACITOR CH 50V 220P	1	
C243		ECUM1E104ZFN	C.CAPACITOR CH 25V 0.1U	1	
C244		ECUM1H103KBN	C.CAPACITOR CH 50V 0.01U	1	
C245		ECEA1CU470	E.CAPACITOR 16V 47U	1	
C246-48		ECUM1E104ZFN	C.CAPACITOR CH 25V 0.1U	3	
C249		ECUM1H220JCN	C.CAPACITOR CH 50V 22P	1	
C250		ECUM1H680JCN	C.CAPACITOR CH 50V 68P	1	
C252,53		ECUM1H103KBN	C.CAPACITOR CH 50V 0.01U	2	
C254		ECEA1CU470	E.CAPACITOR 16V 47U	1	
C255		ECUM1H103KBN	C.CAPACITOR CH 50V 0.01U	1	
C256,57		ECUM1E104ZFN	C.CAPACITOR CH 25V 0.1U	2	
C258		ECUM1H120JCN	C.CAPACITOR CH 50V 12P	1	
C259		ECUM1H330JCN	C.CAPACITOR CH 50V 33P	1	
C261		ECCF1H270JC	C.CAPACITOR 50V 27P	1	
C301,02		ECUM1H103KBN	C.CAPACITOR CH 50V 0.01U	2	
C303		ECUM1H270JCN	C.CAPACITOR CH 50V 27P	1	
C304,05		ECUM1H103KBN	C.CAPACITOR CH 50V 0.01U	2	
C306		ECUM1H270JCN	C.CAPACITOR CH 50V 27P	1	
C307		ECEA1AU101	E.CAPACITOR 10V 100U	1	
C308,09		ECUM1H103KBN	C.CAPACITOR CH 50V 0.01U	2	
C310		ECEA1AU101	E.CAPACITOR 10V 100U	1	
C311		ECUM1H103KBN	C.CAPACITOR CH 50V 0.01U	1	
C316		ECUM1E104ZFN	C.CAPACITOR CH 25V 0.1U	1	
C322		ECUM1E104ZFN	C.CAPACITOR CH 25V 0.1U	1	
C325		ECUM1E104ZFN	C.CAPACITOR CH 25V 0.1U	1	
C326		ECUM1H103KBN	C.CAPACITOR CH 50V 0.01U	1	
C327		ECUM1E104ZFN	C.CAPACITOR CH 25V 0.1U	1	
C328,29		ECUM1H103KBN	C.CAPACITOR CH 50V 0.01U	2	
C340		ECUM1H103KBN	C.CAPACITOR CH 50V 0.01U	1	
C341		ECEA1CN100S	E.CAPACITOR 16V 10U	1	
C342		ECUM1H103KBN	C.CAPACITOR CH 50V 0.01U	1	
C343		ECUM1H150JCN	C.CAPACITOR CH 50V 15P	1	
C344		ECUM1H101JCN	C.CAPACITOR CH 50V 100P	1	
C345		ECUM1H100DCN	C.CAPACITOR CH 50V 10P	1	
C346		ECUM1H103KBN	C.CAPACITOR CH 50V 0.01U	1	
C347,48		ECEA1AU101	E.CAPACITOR 10V 100U	2	
C349		ECUM1H103KBN	C.CAPACITOR CH 50V 0.01U	1	
C350		ECUM1H820JCN	C.CAPACITOR CH 50V 82P	1	
C351		ECUM1H221JCN	C.CAPACITOR CH 50V 220P	1	
C352		ECUM1H103KBN	C.CAPACITOR CH 50V 0.01U	1	
C353		ECUM1H680JCN	C.CAPACITOR CH 50V 68P	1	
C354,55		ECUM1H103KBN	C.CAPACITOR CH 50V 0.01U	2	
C356		ECUM1E104ZFN	C.CAPACITOR CH 25V 0.1U	1	
C357		ECEA1HU2R2	E.CAPACITOR 50V 2.2U	1	
C358		ECEA1AU101	E.CAPACITOR 10V 100U	1	

Refer to the P.C.BOARDS LIST, page 6-1-1, before using this page.

Ref.No.		Part No.	Part Name & Description	Pcs	Remarks
C377,78		ECUM1H103KBN	C.CAPACITOR CH 50V 0.01U	2	
C380		ECUM1E104ZFN	C.CAPACITOR CH 25V 0.1U	1	
C381		ECUM1H103KBN	C.CAPACITOR CH 50V 0.01U	1	
C382		ECUM1E104ZFN	C.CAPACITOR CH 25V 0.1U	1	
C383		ECEA1AU101	E.CAPACITOR 10V 100U	1	
C386		ECUM1H050DCN	C.CAPACITOR CH 50V 50P	1	
C387		ECUM1H100DCN	C.CAPACITOR CH 50V 10P	1	
C389		ECUM1H331JCN	C.CAPACITOR CH 50V 330P	1	
C391		ECUM1H470JCN	C.CAPACITOR CH 50V 47P	1	
C392		ECUM1H103KBN	C.CAPACITOR CH 50V 0.01U	1	
C393		ECEA1AU101	E.CAPACITOR 10V 100U	1	
C394		ECUM1H103KBN	C.CAPACITOR CH 50V 0.01U	1	
C395		ECUM1E104ZFN	C.CAPACITOR CH 25V 0.1U	1	
C396,97		ECUM1H103KBN	C.CAPACITOR CH 50V 0.01U	2	
C398		ECUM1H180JCN	C.CAPACITOR CH 50V 18P	1	
C399		ECUM1H103KBN	C.CAPACITOR CH 50V 0.01U	1	
C400		ECUM1E104ZFN	C.CAPACITOR CH 25V 0.1U	1	
C401-03		ECUM1H103KBN	C.CAPACITOR CH 50V 0.01U	3	
C404		ECEA1AU101	E.CAPACITOR 10V 100U	1	
C405-07		ECUM1E104ZFN	C.CAPACITOR CH 25V 0.1U	3	
C408,09		ECUM1H270JCN	C.CAPACITOR CH 50V 27P	2	
C410		ECEA1AU471	E.CAPACITOR 10V 470U	1	
C411		ECUM1E104ZFN	C.CAPACITOR CH 25V 0.1U	1	
C412		ECUM1H221JCN	C.CAPACITOR CH 50V 220P	1	
C413		ECEA1AU101	E.CAPACITOR 10V 100U	1	
C414		ECUM1H470JCN	C.CAPACITOR CH 50V 47P	1	
C415		ECUM1H180JCN	C.CAPACITOR CH 50V 18P	1	
C416		ECUM1H181JCN	C.CAPACITOR CH 50V 180P	1	
C417,18		ECUM1E104ZFN	C.CAPACITOR CH 25V 0.1U	2	
C419		ECUM1H331JCN	C.CAPACITOR CH 50V 330P	1	
C420		ECUM1H220JCN	C.CAPACITOR CH 50V 22P	1	
C421		ECUM1H680JCN	C.CAPACITOR CH 50V 68P	1	
C422		ECUM1H330JCN	C.CAPACITOR CH 50V 33P	1	
C423		ECEA1AU101	E.CAPACITOR 10V 100U	1	
C424		ECEA1CU100	E.CAPACITOR 16V 10U	1	
C425		ECUM1H221JCN	C.CAPACITOR CH 50V 220P	1	
C426		VCM0044	M.CAPACITOR 130P	1	
C427		VCM0023	M.CAPACITOR 379P	1	
C428		ECUM1H680JCN	C.CAPACITOR CH 50V 68P	1	
C429		ECUM1H390JCN	C.CAPACITOR CH 50V 39P	1	
C430		ECUM1H331JCN	C.CAPACITOR CH 50V 330P	1	
C431		ECUM1H270JCN	C.CAPACITOR CH 50V 27P	1	
C432		ECEA0JU221	E.CAPACITOR 6.3V 220U	1	
C433		ECUM1H050DCN	C.CAPACITOR CH 50V 50P	1	
C434		ECUM1H470JCN	C.CAPACITOR CH 50V 47P	1	
C435		ECUM1H020CCN	C.CAPACITOR CH 50V 2P	1	
C436,37		ECUM1E104ZFN	C.CAPACITOR CH 25V 0.1U	2	
C440		ECUM1H470JCN	C.CAPACITOR CH 50V 47P	1	
C441		ECUM1H103KBN	C.CAPACITOR CH 50V 0.01U	1	
C442,43		ECEA1CU221	E.CAPACITOR 16V 220U	2	
C444,45		ECUM1H103KBN	C.CAPACITOR CH 50V 0.01U	2	
C446,47		VCM0027	V.CAPACITOR	2	
C448		ECEA1AU101	E.CAPACITOR 10V 100U	1	
C449		ECUM1E104ZFN	C.CAPACITOR CH 25V 0.1U	1	
C450		ECEA1AU101	E.CAPACITOR 10V 100U	1	
C451		ECEA1CU101	E.CAPACITOR 16V 100U	1	
C453		ECUM1E104ZFN	C.CAPACITOR CH 25V 0.1U	1	
C454		ECUM1H820JCN	C.CAPACITOR CH 50V 82P	1	
C455,56		ECUM1H103KBN	C.CAPACITOR CH 50V 0.01U	2	
C457,58		ECEA1AU101	E.CAPACITOR 10V 100U	2	
C459		ECUM1H151JCN	C.CAPACITOR CH 50V 150P	1	
C460		ECUM1H471JCN	C.CAPACITOR CH 50V 470P	1	
C461,62		ECEA1CU100	E.CAPACITOR 16V 10U	2	
C463		ECUM1H181JCN	C.CAPACITOR CH 50V 180P	1	
C464		ECUM1H680JCN	C.CAPACITOR CH 50V 68P	1	
C465,66		ECEA1AU101	E.CAPACITOR 10V 100U	2	
C467		ECUM1E104ZFN	C.CAPACITOR CH 25V 0.1U	1	
C468		ECUM1H103KBN	C.CAPACITOR CH 50V 0.01U	1	
C469		ECUM1H220JCN	C.CAPACITOR CH 50V 22P	1	
C470		ECCF1H330JC	C.CAPACITOR 50V 33P	1	
C471		ECCF1H060DC	C.CAPACITOR 50V 6P	1	
C701,02		ECUM1H103KBN	C.CAPACITOR CH 50V 0.01U	2	
C703		ECEA1AU101	E.CAPACITOR 10V 100U	1	
C704,05		ECUM1H103KBN	C.CAPACITOR CH 50V 0.01U	2	
C706		ECUM1H330JCN	C.CAPACITOR CH 50V 33P	1	

Ref.No.		Part No.	Part Name & Description	Pcs	Remarks
C725		ECUM1H180JCN	C.CAPACITOR CH 50V 18P	1	
C726		ECUM1H103KBN	C.CAPACITOR CH 50V 0.01U	1	
C727		ECUM1E104ZFN	C.CAPACITOR CH 25V 0.1U	1	
C728		ECUM1H220JCN	C.CAPACITOR CH 50V 22P	1	
C729		ECUM1H121JCN	C.CAPACITOR CH 50V 120P	1	
C730,31		ECUM1H103KBN	C.CAPACITOR CH 50V 0.01U	2	
C732		ECUM1H101JCN	C.CAPACITOR CH 50V 100P	1	
C733		ECEA1AU101	E.CAPACITOR 10V 100U	1	
C734		ECUM1H331JCN	C.CAPACITOR CH 50V 330P	1	
C735		ECEA1AU101	E.CAPACITOR 10V 100U	1	
C736		ECUM1H103KBN	C.CAPACITOR CH 50V 0.01U	1	
C737		ECUM1H101JCN	C.CAPACITOR CH 50V 100P	1	
C738		ECUM1H103KBN	C.CAPACITOR CH 50V 0.01U	1	
C740-42		ECUM1H103KBN	C.CAPACITOR CH 50V 0.01U	3	
C744		ECUM1E104ZFN	C.CAPACITOR CH 25V 0.1U	1	
C745		ECUM1H103KBN	C.CAPACITOR CH 50V 0.01U	1	
C746		ECUM1E104ZFN	C.CAPACITOR CH 25V 0.1U	1	
C747		ECEA1AU101	E.CAPACITOR 10V 100U	1	
C749		ECUM1H561JCN	C.CAPACITOR CH 50V 560P	1	
C750		ECUM1H331JCN	C.CAPACITOR CH 50V 330P	1	
C751		ECUM1H221JCN	C.CAPACITOR CH 50V 220P	1	
C752		ECUM1H561JCN	C.CAPACITOR CH 50V 560P	1	
C753		ECUM1H270JCN	C.CAPACITOR CH 50V 27P	1	
C754		ECUM1H181JCN	C.CAPACITOR CH 50V 180P	1	
C755		ECUM1H270JCN	C.CAPACITOR CH 50V 27P	1	
C756		ECUM1H101JCN	C.CAPACITOR CH 50V 100P	1	
C757		ECUM1H270JCN	C.CAPACITOR CH 50V 27P	1	
C758		ECUM1H050DCN	C.CAPACITOR CH 50V 50P	1	
C759		ECUM1E104ZFN	C.CAPACITOR CH 25V 0.1U	1	
C760		ECUM1H100DCN	C.CAPACITOR CH 50V 10P	1	
C762		ECUM1H391JCN	C.CAPACITOR CH 50V 390P	1	
C764		ECUM1H560JCN	C.CAPACITOR CH 50V 56P	1	
C765,66		ECUM1H103KBN	C.CAPACITOR CH 50V 0.01U	2	
C767		ECEA1AU101	E.CAPACITOR 10V 100U	1	
C768,69		ECUM1H103KBN	C.CAPACITOR CH 50V 0.01U	2	
C770		ECUM1H220JCN	C.CAPACITOR CH 50V 22P	1	
C771		ECUM1H681JCN	C.CAPACITOR CH 50V 680P	1	
C772		ECUM1E104ZFN	C.CAPACITOR CH 25V 0.1U	1	
C773-75		ECUM1H103KBN	C.CAPACITOR CH 50V 0.01U	3	
C776		ECUM1E104ZFN	C.CAPACITOR CH 25V 0.1U	1	
C777		ECEA1AU101	E.CAPACITOR 10V 100U	1	
C778,79		ECUM1E104ZFN	C.CAPACITOR CH 25V 0.1U	2	
C780,81		ECUM1H390JCN	C.CAPACITOR CH 50V 39P	2	
C782		ECEA1AU471	E.CAPACITOR 10V 470U	1	
C783		ECUM1E104ZFN	C.CAPACITOR CH 25V 0.1U	1	
C784		ECUM1H221JCN	C.CAPACITOR CH 50V 220P	1	
C785		ECEA1AU101	E.CAPACITOR 10V 100U	1	
C786		ECUM1H121JCN	C.CAPACITOR CH 50V 120P	1	
C787		ECUM1H100DCN	C.CAPACITOR CH 50V 10P	1	
C788		ECUM1H331JCN	C.CAPACITOR CH 50V 330P	1	
C789,90		ECUM1E104ZFN	C.CAPACITOR CH 25V 0.1U	2	
C791		ECUM1H331JCN	C.CAPACITOR CH 50V 330P	1	
C792		ECUM1H220JCN	C.CAPACITOR CH 50V 22P	1	
C793		ECUM1H680JCN	C.CAPACITOR CH 50V 68P	1	
C794		ECUM1H330JCN	C.CAPACITOR CH 50V 33P	1	
C796		ECEA1CU100	E.CAPACITOR 16V 10U	1	
C797		VCM0023	M.CAPACITOR 379P	1	
C799		ECEA0JU221	E.CAPACITOR 6.3V 220U	1	
C800		ECUM1H050DCN	C.CAPACITOR CH 50V 50P	1	
C801		ECUM1H020CCN	C.CAPACITOR CH 50V 2P	1	
C802		ECUM1H330JCN	C.CAPACITOR CH 50V 33P	1	
C803,04		ECUM1E104ZFN	C.CAPACITOR CH 25V 0.1U	2	
C805		ECUM1H470JCN	C.CAPACITOR CH 50V 47P	1	
C808		ECEA1CU221	E.CAPACITOR 16V 220U	1	
C810		ECEA1CU221	E.CAPACITOR 16V 220U	1	
C811,12		ECUM1H103KBN	C.CAPACITOR CH 50V 0.01U	2	
C813,14		VCM0027	V.CAPACITOR	2	
C815		ECEA1AU101	E.CAPACITOR 10V 100U	1	
C816		ECUM1E104ZFN	C.CAPACITOR CH 25V 0.1U	1	
C817		ECEA1AU101	E.CAPACITOR 10V 100U	1	
C818		ECUM1H220JCN	C.CAPACITOR CH 50V 22P	1	
C819		ECEA1CU101	E.CAPACITOR 16V 100U	1	
C821		ECUM1E104ZFN	C.CAPACITOR CH 25V 0.1U	1	
C822		ECUM1H101JCN	C.CAPACITOR CH 50V 100P	1	
C823,24		ECUM1H103KBN	C.CAPACITOR CH 50V 0.01U	2	

Refer to the P.C.BOARDS LIST, page 6-1-1, before using this page.

Ref.No.		Part No.	Part Name & Description	Pcs	Remarks
C825		ECEA1AU101	E.CAPACITOR 10V 100U	1	
C826		ECUM1H680JCN	C.CAPACITOR CH 50V 68P	1	
C827		ECUM1H100DCN	C.CAPACITOR CH 50V 10P	1	
C828		ECUM1H221JCN	C.CAPACITOR CH 50V 220P	1	
C829		ECEA1AU101	E.CAPACITOR 10V 100U	1	
C830,31		ECEA1CU100	E.CAPACITOR 16V 10U	2	
C832,33		ECEA1AU101	E.CAPACITOR 10V 100U	2	
C834		ECUM1H470JCN	C.CAPACITOR CH 50V 47P	1	
C835		ECUM1H680JCN	C.CAPACITOR CH 50V 68P	1	
C836		ECCF1H330JC	C.CAPACITOR 50V 33P	1	
C837		ECCF1H060DC	C.CAPACITOR 50V 6P	1	
D1,D2		MA151K	DIODE	2	
D3		MA151WK	DIODE	1	
D201		MA151WK	DIODE	1	
D301		MA151WK	DIODE	1	
D303		MA151K	DIODE	1	
D305		MA151K	DIODE	1	
D306,07		MA151WK	DIODE	2	
D308-10		MA151WA	DIODE	3	
D701		MA151WK	DIODE	1	
D702,03		MA151K	DIODE	2	
D705		MA151K	DIODE	1	
D706		MA151WK	DIODE	1	
D707		MA151WA	DIODE	1	
DL301		VLD0190	DELAY	1	
DL701		VLD0199	DELAY	1	
FL1		ELB5F100	FILTER	1	
FL201		ELB5F100	FILTER	1	
FL301		VLF0545	FILTER	1	
FL302		VLF0658	FILTER	1	
FL303		VLF0712	FILTER	1	
FL701		VLF0652	FILTER	1	
IC1		NE5539D	IC	1	
IC2		UPD4053BG	IC	1	
IC3		RC084M	IC	1	
IC4		RC082BM	IC	1	
IC5		AN6306S	IC	1	
IC6		MC14538BF	IC	1	
IC7		TC74HC221AF	IC	1	
IC9		AN79N09	IC	1	
IC10		AN79N09	IC	1	
IC11,12		AN79M05F	IC	2	
IC13		AN78M05F	IC	1	
IC14		AN78N05	IC	1	
IC15		AN78N09	IC	1	
IC16		AN78L05	IC	1	
IC17		AN78N09	IC	1	
IC201		NE5539D	IC	1	
IC202		TC74HC221AF	IC	1	
IC203		AN6306S	IC	1	
IC301		AN6308S	IC	1	
IC304		AN6308S	IC	1	
IC305		AN608P	IC	1	
IC306		NJM1496M	IC	1	
IC307		UPD4053BG	IC	1	
IC310		AN6308S	IC	1	
IC311-15		10116D	IC	5	
IC316		SN74LS123NS	IC	1	
IC317		MC74HC00AF	IC	1	
IC319		NE5539D	IC	1	
IC322		NJM592M8	IC	1	
IC323		MC74HC4053F	IC	1	
IC324		RC082BM	IC	1	

Ref.No.		Part No.	Part Name & Description	Pcs	Remarks
IC325		TC74HC221AF	IC	1	
IC326		RC082BM	IC	1	
IC701		AN6308S	IC	1	
IC705		NJM1496M	IC	1	
IC706		UPD4053BG	IC	1	
IC707		AN6308S	IC	1	
IC708-12		10116D	IC	5	
IC716		NE5539D	IC	1	
IC719		NJM592M8	IC	1	
IC720		MC74HC4053F	IC	1	
IC721		RC082BM	IC	1	
IC722		TC74HC221AF	IC	1	
L1,L2		VLQEL05F101K	COIL 100UH	2	
L1		VLQEL05S1R2J	COIL 1.2UH	1	FOR VEP83098E
L2		VLQEL05S5R6J	COIL 5.6UH	1	FOR VEP83098E
L3		VLQEL05S180J	COIL 18UH	1	
L4		VLQEL05S151J	COIL 150UH	1	
L5		VLQEL05F101K	COIL 100UH	1	
L6		VLQEL05S1R0J	COIL 1UH	1	
L7		VLQEL05F101K	COIL 100UH	1	
L201,02		VLQEL05F101K	COIL 100UH	2	
L203		VLQEL05S180J	COIL 18UH	1	
L204		VLQEL05S561J	COIL 560UH	1	
L205		VLQEL05F101K	COIL 100UH	1	
L206		VLQEL05S4R7J	COIL 4.7UH	1	
L207		VLQEL05S6R8J	COIL 6.8UH	1	
L208		VLQEL05S3R9J	COIL 3.9UH	1	
L209		VLQEL05S390J	COIL 39UH	1	
L210		VLQEL05F101K	COIL 100UH	1	
L211		VLQEL05S3R3J	COIL 3.3UH	1	
L212		VLQEL05F101K	COIL 100UH	1	
L301		VLQEL05F101K	COIL 100UH	1	
L302,03		VLQEL05S100J	COIL 10UH	2	
L304		VLQEL05F101K	COIL 100UH	1	
L308		VLQEL05S3R3J	COIL 3.3UH	1	
L309,10		VLQEL05F101K	COIL 100UH	2	
L311		VLQEL05S330J	COIL 33UH	1	
L312		VLQEL05S2R7J	COIL 2.7UH	1	
L313		VLQEL05F101K	COIL 100UH	1	
L318		VLQEL05F101K	COIL 100UH	1	
L320,21		VLQEL05S2R2J	COIL 2.2UH	2	
L322		VLQEL05S180J	COIL 18UH	1	
L323		VLQEL05F101K	COIL 100UH	1	
L324		VLQEL05S1R0J	COIL 1UH	1	
L325-27		VLQEL05F101K	COIL 100UH	3	
L328		VLQEL05S6R8J	COIL 6.8UH	1	
L329		VLQEL05F101K	COIL 100UH	1	
L330		VLQEL05S3R3J	COIL 3.3UH	1	
L333		VLQEL05F101K	COIL 100UH	1	
L334		VLQEL05S6R8K	COIL 6.8UH	1	
L335		VLQEL05F101K	COIL 100UH	1	
L339		VLQEL05S6R8J	COIL 6.8UH	1	
L340,41		VLQEL05F101K	COIL 100UH	2	
L342		VLQEL05S820J	COIL 82UH	1	
L343,44		VLQEL05F101K	COIL 100UH	2	
L701		VLQEL05F101K	COIL 100UH	1	
L702		VLQEL05S150J	COIL 15UH	1	
L709		VLQEL05S4R7J	COIL 4.7UH	1	
L710		VLQEL05F101K	COIL 100UH	1	
L711		VLQEL05S560J	COIL 56UH	1	
L712		VLQEL05F101K	COIL 100UH	1	
L713		VLQEL05S3R9J	COIL 3.9UH	1	
L715		VLQEL05F101K	COIL 100UH	1	
L716		VLQEL05S181J	COIL 180UH	1	
L717		VLQEL05S680J	COIL 68UH	1	
L718		VLQEL05S2R2J	COIL 2.2UH	1	
L719,20		VLQEL05S6R8J	COIL 6.8UH	2	
L721		VLQEL05S4R7J	COIL 4.7UH	1	
L722		VLQEL05S2R7J	COIL 2.7UH	1	
L722		VLQEL05S3R3J	COIL 3.3UH	1	
L723		VLQEL05S270J	COIL 27UH	1	
L724		VLQEL05F101K	COIL 100UH	1	

Refer to the P.C.BOARDS LIST, page 6-1-1, before using this page.

Ref.No.		Part No.	Part Name & Description	Pcs	Remarks
L725		VLQEL05S1R5J	COIL 1.5UH	1	
L726-28		VLQEL05F101K	COIL 100UH	3	
L729		VLQEL05S150J	COIL 15UH	1	
L731		VLQEL05F101K	COIL 100UH	1	
L732		VLQEL05S6R8K	COIL 6.8UH	1	
L733		VLQEL05F101K	COIL 100UH	1	
L737		VLQEL05S220J	COIL 22UH	1	
L738		VLQEL05S390J	COIL 39UH	1	
L739-42		VLQEL05F101K	COIL 100UH	4	
Q1		2SD601	TRANSISTOR CHIP	1	(Q,R)
Q2		2SC3757	TRANSISTOR	1	(Q,R)
Q3,Q4		2SA1226	TRANSISTOR	2	
Q7		2SC2480	TRANSISTOR	1	
Q8		2SA1462	TRANSISTOR	1	
Q9		2SC2295	TRANSISTOR CHIP	1	(B,C)
Q10		2SA1022-C	TRANSISTOR CHIP	1	(B,C)
Q11-13		2SA1226	TRANSISTOR	3	
Q14		2SC2295	TRANSISTOR CHIP	1	(B,C)
Q15		2SK374	TRANSISTOR	1	
Q16		2SA1226	TRANSISTOR	1	
Q17		2SC3757	TRANSISTOR	1	(Q,R)
Q18		2SA1226	TRANSISTOR	1	
Q19,20		2SC2295	TRANSISTOR CHIP	2	(B,C)
Q21		UN2213	TRANSISTOR-RESISTOR	1	
Q201		2SD601	TRANSISTOR CHIP	1	(Q,R)
Q202-04		2SC2480	TRANSISTOR	3	
Q206		2SC2295	TRANSISTOR CHIP	1	(B,C)
Q207		2SC2480	TRANSISTOR	1	
Q208		2SA1462	TRANSISTOR	1	
Q209		2SC2295	TRANSISTOR CHIP	1	(B,C)
Q210		2SA1022-C	TRANSISTOR CHIP	1	(B,C)
Q211		2SC2295	TRANSISTOR CHIP	1	(B,C)
Q212		2SA1022-C	TRANSISTOR CHIP	1	(B,C)
Q213		2SA1226	TRANSISTOR	1	
Q214		2SC2295	TRANSISTOR CHIP	1	(B,C)
Q215		2SC3757	TRANSISTOR	1	(Q,R)
Q216		2SC2295	TRANSISTOR CHIP	1	(B,C)
Q217		2SC3757	TRANSISTOR	1	(Q,R)
Q218		2SA1226	TRANSISTOR	1	
Q219,20		2SC2295	TRANSISTOR CHIP	2	(B,C)
Q301-04		2SC2295	TRANSISTOR CHIP	4	(B,C)
Q309,10		2SC2295	TRANSISTOR CHIP	2	(B,C)
Q311		2SA1022-C	TRANSISTOR CHIP	1	(B,C)
Q313,14		2SC2295	TRANSISTOR CHIP	2	(B,C)
Q315		2SA1022-C	TRANSISTOR CHIP	1	(B,C)
Q316		2SC2295	TRANSISTOR CHIP	1	(B,C)
Q317,18		2SA1022-C	TRANSISTOR CHIP	2	(B,C)
Q319		IMX4	TRANSISTOR	1	
Q320		UN2113	TRANSISTOR-RESISTOR	1	
Q324		2SC2295	TRANSISTOR CHIP	1	(B,C)
Q326		2SC2295	TRANSISTOR CHIP	1	(B,C)
Q327		2SA1022-C	TRANSISTOR CHIP	1	(B,C)
Q329-38		2SC2295	TRANSISTOR CHIP	10	(B,C)
Q339,40		UN2213	TRANSISTOR-RESISTOR	2	
Q341		2SA1462	TRANSISTOR	1	
Q342,43		2SC3757	TRANSISTOR	2	(Q,R)
Q344		2SC2295	TRANSISTOR CHIP	1	(B,C)
Q345		2SA1022-C	TRANSISTOR CHIP	1	(B,C)
Q346		2SC2480	TRANSISTOR	1	
Q347		2SA1462	TRANSISTOR	1	
Q348		2SC2480	TRANSISTOR	1	
Q349,50		2SA1226	TRANSISTOR	2	
Q351		2SK374	TRANSISTOR	1	
Q352		2SC3757	TRANSISTOR	1	(Q,R)
Q353		2SA1226	TRANSISTOR	1	
Q356-61		UN2113	TRANSISTOR-RESISTOR	6	
Q362,63		2SC2295	TRANSISTOR CHIP	2	(B,C)
Q364		2SA1022-C	TRANSISTOR CHIP	1	(B,C)
Q365,66		2SA1226	TRANSISTOR	2	
Q367		2SC3757	TRANSISTOR	1	(Q,R)
Q368,69		2SC2295	TRANSISTOR CHIP	2	(B,C)
Q370,71		UN2113	TRANSISTOR-RESISTOR	2	

Ref.No.		Part No.	Part Name & Description	Pcs	Remarks
Q372		2SC2295	TRANSISTOR CHIP	1	(B,C)
Q373-75		UN2213	TRANSISTOR-RESISTOR	3	
Q376		2SA1462	TRANSISTOR	1	
Q377		2SA1226	TRANSISTOR	1	
Q378		2SB709	TRANSISTOR CHIP	1	(Q,R)
Q379		2SC2480	TRANSISTOR	1	
Q380,81		2SC2295	TRANSISTOR CHIP	2	(B,C)
Q382-84		2SC3757	TRANSISTOR	3	(Q,R)
Q385,86		2SC2295	TRANSISTOR CHIP	2	(B,C)
Q387		2SA1022-C	TRANSISTOR CHIP	1	(B,C)
Q388		2SD601	TRANSISTOR CHIP	1	(Q,R)
Q389		2SB709	TRANSISTOR CHIP	1	(Q,R)
Q701,02		2SA1022-C	TRANSISTOR CHIP	2	(B,C)
Q710,11		2SC2295	TRANSISTOR CHIP	2	(B,C)
Q712		2SA1022-C	TRANSISTOR CHIP	1	(B,C)
Q713		2SC2295	TRANSISTOR CHIP	1	(B,C)
Q714,15		2SA1022-C	TRANSISTOR CHIP	2	(B,C)
Q716		2SC2295	TRANSISTOR CHIP	1	(B,C)
Q718		2SC2295	TRANSISTOR CHIP	1	(B,C)
Q719		2SA1022-C	TRANSISTOR CHIP	1	(B,C)
Q721-30		2SC2295	TRANSISTOR CHIP	10	(B,C)
Q731		UN2213	TRANSISTOR-RESISTOR	1	
Q732		2SA1462	TRANSISTOR	1	
Q733		2SC2295	TRANSISTOR CHIP	1	(B,C)
Q734		2SA1022-C	TRANSISTOR CHIP	1	(B,C)
Q735		2SC2480	TRANSISTOR	1	
Q736		2SA1462	TRANSISTOR	1	
Q737		2SC2480	TRANSISTOR	1	
Q738,39		2SA1226	TRANSISTOR	2	
Q740		2SK374	TRANSISTOR	1	
Q741		2SC3757	TRANSISTOR	1	(Q,R)
Q742		2SA1226	TRANSISTOR	1	
Q745,46		2SC2295	TRANSISTOR CHIP	2	(B,C)
Q747		2SA1022-C	TRANSISTOR CHIP	1	(B,C)
Q748,49		2SA1226	TRANSISTOR	2	
Q750		2SC3757	TRANSISTOR	1	(Q,R)
Q751		2SC2295	TRANSISTOR CHIP	1	(B,C)
Q753		2SC2295	TRANSISTOR CHIP	1	(B,C)
Q754		2SA1462	TRANSISTOR	1	
Q755		2SA1226	TRANSISTOR	1	
Q756		2SB709	TRANSISTOR CHIP	1	(Q,R)
Q757		2SC2480	TRANSISTOR	1	
Q758-60		2SC3757	TRANSISTOR	3	(Q,R)
Q761		2SC2295	TRANSISTOR CHIP	1	(B,C)
Q762		2SA1022-C	TRANSISTOR CHIP	1	(B,C)
Q763		2SD601	TRANSISTOR CHIP	1	(Q,R)
Q764		2SB709	TRANSISTOR CHIP	1	(Q,R)
			RESISTORS		
R1		ERJ6GEYJ471	M.RESISTOR CH 1/10W 470	1	
R2		ERJ6GEYJ470	M.RESISTOR CH 1/10W 47	1	
R1,R2		ERJ6GEYJ151	M.RESISTOR CH 1/10W 150	1	FOR VEP83098E
R3		ERJ6GEYJ152	M.RESISTOR CH 1/10W 1.5K	1	
R3		ERJ6GEYJ331	M.RESISTOR CH 1/10W 330	1	FOR VEP83098E
R4,R5		ERJ6GEYG331	M.RESISTOR CH 1/10W 330	2	
R6		ERJ6GEYJ101	M.RESISTOR CH 1/10W 100	1	
R7		ERJ6GEYJ151	M.RESISTOR CH 1/10W 150	1	
R8		ERJ6GEYJ332	M.RESISTOR CH 1/10W 3.3K	1	
R9		ERJ6GEYJ561	M.RESISTOR CH 1/10W 560	1	
R10		ERJ6GEYJ332	M.RESISTOR CH 1/10W 3.3K	1	
R11		ERJ6GEYJ101	M.RESISTOR CH 1/10W 100	1	
R12		ERJ6GEYJ332	M.RESISTOR CH 1/10W 3.3K	1	
R13		ERJ6GEYJ103	M.RESISTOR CH 1/10W 10K	1	
R14,15		ERJ6GEYJ101	M.RESISTOR CH 1/10W 100	2	
R16		ERJ6GEYJ222	M.RESISTOR CH 1/10W 2.2K	1	
R17		ERJ6GEYJ682	M.RESISTOR CH 1/10W 6.8K	1	
R18		ERJ6GEYJ152	M.RESISTOR CH 1/10W 1.5K	1	
R19		ERJ6GEYJ103	M.RESISTOR CH 1/10W 10K	1	
R20		ERJ6GEYJ472	M.RESISTOR CH 1/10W 4.7K	1	
R27		ERJ6GEYG223	M.RESISTOR CH 1/10W 22K	1	
R28,29		ERJ6GEYJ221	M.RESISTOR CH 1/10W 220	2	
R30,31		ERJ6GEYJ183	M.RESISTOR CH 1/10W 18K	2	
R32,33		ERJ6GEYJ273	M.RESISTOR CH 1/10W 27K	2	

Refer to the P.C.BOARDS LIST, page 6-1-1, before using this page.

Ref.No.		Part No.	Part Name & Description	Pcs	Remarks
R34,35		ERJ6GEYJ681	M.RESISTOR CH 1/10W 680	2	
R36		ERJ6GEYJ471	M.RESISTOR CH 1/10W 470	1	
R37		ERJ6GEYJ273	M.RESISTOR CH 1/10W 27K	1	
R38		VRE0034E43A	M.RESISTOR CH 1/10W	1	
R39		VRE0034E82A	M.RESISTOR CH 1/10W	1	
R40		ERJ6GEYJ821	M.RESISTOR CH 1/10W 820	1	
R41		VRE0034E89A	M.RESISTOR CH 1/10W 825	1	
R42		ERJ6GEYJ470	M.RESISTOR CH 1/10W 47	1	
R43		ERJ6GEYJ682	M.RESISTOR CH 1/10W 6.8K	1	
R44		ERJ6GEYJ152	M.RESISTOR CH 1/10W 1.5K	1	
R45		VRE0034E26A	M.RESISTOR CH 1/10W 182	1	
R46		ERJ6GEYJ222	M.RESISTOR CH 1/10W 2.2K	1	
R47		ERJ6GEYJ102	M.RESISTOR CH 1/10W 1K	1	
R48		ERJ6GEYJ331	M.RESISTOR CH 1/10W 330	1	
R49		ERJ6GEYJ181	M.RESISTOR CH 1/10W 180	1	
R50		ERJ6GEYJ101	M.RESISTOR CH 1/10W 100	1	
R51		ERJ6GEYJ332	M.RESISTOR CH 1/10W 3.3K	1	
R52		ERJ6GEYJ102	M.RESISTOR CH 1/10W 1K	1	
R53		ERJ6GEYJ221	M.RESISTOR CH 1/10W 220	1	
R54		ERJ6GEYK225	M.RESISTOR CH 1/10W 2.2M	1	
R55,56		ERJ6GEYJ101	M.RESISTOR CH 1/10W 100	2	
R57		ERJ6GEYG103	M.RESISTOR CH 1/10W 10K	1	
R58		ERJ6GEYJ105	M.RESISTOR CH 1/10W 1M	1	
R59		ERJ6GEYK225	M.RESISTOR CH 1/10W 2.2M	1	
R60		ERJ6GEYJ472	M.RESISTOR CH 1/10W 4.7K	1	
R61		ERJ6GEYJ682	M.RESISTOR CH 1/10W 6.8K	1	
R62		ERJ6GEYJ103	M.RESISTOR CH 1/10W 10K	1	
R63		ERJ6GEYJ101	M.RESISTOR CH 1/10W 100	1	
R64		ERJ6GEYG243	M.RESISTOR CH 1/10W 24K	1	
R65		ERJ6GEYJ103	M.RESISTOR CH 1/10W 10K	1	
R66		ERJ6GEYJ105	M.RESISTOR CH 1/10W 1M	1	
R67		VRE0034E27B	M.RESISTOR CH 1/10W 1.87K	1	
R68		ERJ6GEYK5R6	M.RESISTOR CH 1/10W 5.6	1	
R69		VRE0034E751	M.RESISTOR CH 1/10W 750	1	
R70		ERJ6GEYJ222	M.RESISTOR CH 1/10W 2.2K	1	
R71		ERJ6GEYJ272	M.RESISTOR CH 1/10W 2.7K	1	
R72		ERJ6GEYJ103	M.RESISTOR CH 1/10W 10K	1	
R73,74		ERJ6GEYJ101	M.RESISTOR CH 1/10W 100	2	
R75,76		ERJ6GEYJ154	M.RESISTOR CH 1/10W 150K	2	
R77		ERJ6GEYJ332	M.RESISTOR CH 1/10W 3.3K	1	
R78		ERJ6GEYJ470	M.RESISTOR CH 1/10W 47	1	
R79		ERJ6GEYJ331	M.RESISTOR CH 1/10W 330	1	
R80		ERJ6GEYJ151	M.RESISTOR CH 1/10W 150	1	
R81		ERJ6GEYJ102	M.RESISTOR CH 1/10W 1K	1	
R82,83		ERJ6GEYJ470	M.RESISTOR CH 1/10W 47	2	
R84,85		ERJ6GEYJ102	M.RESISTOR CH 1/10W 1K	2	
R86,87		ERJ6GEYJ101	M.RESISTOR CH 1/10W 100	2	
R88		ERJ6GEYJ222	M.RESISTOR CH 1/10W 2.2K	1	
R89		ERJ6GEYJ331	M.RESISTOR CH 1/10W 330	1	
R90		ERJ6GEYJ102	M.RESISTOR CH 1/10W 1K	1	
R92		ERJ6GEYJ101	M.RESISTOR CH 1/10W 100	1	
R93		ERJ6GEYJ470	M.RESISTOR CH 1/10W 47	1	
R94		ERJ6GEYJ473	M.RESISTOR CH 1/10W 47K	1	
R95		ERJ6GEYJ153	M.RESISTOR CH 1/10W 15K	1	
R96		ERJ6GEYJ223	M.RESISTOR CH 1/10W 22K	1	
R97		ERJ6GEYJ153	M.RESISTOR CH 1/10W 15K	1	
R98		ERJ6GEYJ103	M.RESISTOR CH 1/10W 10K	1	
R99		ERJ6GEYJ332	M.RESISTOR CH 1/10W 3.3K	1	
R102		ERJ6GEYG472	M.RESISTOR CH 1/10W 4.7K	1	
R103		ERJ6GEYG182	M.RESISTOR CH 1/10W 1.8K	1	
R104		ERJ6GEYG104	M.RESISTOR CH 1/10W 100K	1	
R105		ERJ6GEYJ222	M.RESISTOR CH 1/10W 2.2K	1	
R201		ERJ6GEYJ471	M.RESISTOR CH 1/10W 470	1	
R202		ERJ6GEYJ101	M.RESISTOR CH 1/10W 100	1	
R203		ERJ6GEYJ152	M.RESISTOR CH 1/10W 1.5K	1	
R204,05		ERJ6GEYG331	M.RESISTOR CH 1/10W 330	2	
R206		ERJ6GEYJ101	M.RESISTOR CH 1/10W 100	1	
R207		ERJ6GEYJ151	M.RESISTOR CH 1/10W 150	1	
R208		ERJ6GEYJ681	M.RESISTOR CH 1/10W 680	1	
R209,10		ERJ6GEYJ332	M.RESISTOR CH 1/10W 3.3K	2	
R211,12		ERJ6GEYJ101	M.RESISTOR CH 1/10W 100	2	
R213,14		ERJ6GEYJ152	M.RESISTOR CH 1/10W 1.5K	2	
R215		VRE0034E43A	M.RESISTOR CH 1/10W	1	
R216		ERJ6GEYJ273	M.RESISTOR CH 1/10W 27K	1	
R217		VRE0034E82A	M.RESISTOR CH 1/10W	1	

Ref.No.		Part No.	Part Name & Description	Pcs	Remarks
R218		ERJ6GEYJ471	M.RESISTOR CH 1/10W 470	1	
R219		VRE0034E89A	M.RESISTOR CH 1/10W 825	1	
R220		ERJ6GEYJ470	M.RESISTOR CH 1/10W 47	1	
R221		ERJ6GEYJ102	M.RESISTOR CH 1/10W 1K	1	
R222		ERJ6GEYJ222	M.RESISTOR CH 1/10W 2.2K	1	
R223		ERJ6GEYJ102	M.RESISTOR CH 1/10W 1K	1	
R224		VRE0034E26A	M.RESISTOR CH 1/10W 182	1	
R225		ERJ6GEYJ331	M.RESISTOR CH 1/10W 330	1	
R231		ERJ6GEYJ332	M.RESISTOR CH 1/10W 3.3K	1	
R232		ERJ6GEYJ101	M.RESISTOR CH 1/10W 100	1	
R233		ERJ6GEYJ332	M.RESISTOR CH 1/10W 3.3K	1	
R234		ERJ6GEYG223	M.RESISTOR CH 1/10W 22K	1	
R235,36		ERJ6GEYJ221	M.RESISTOR CH 1/10W 220	2	
R237,38		ERJ6GEYJ183	M.RESISTOR CH 1/10W 18K	2	
R239,40		ERJ6GEYJ273	M.RESISTOR CH 1/10W 27K	2	
R241		ERJ6GEYJ681	M.RESISTOR CH 1/10W 680	1	
R242		ERJ6GEYJ181	M.RESISTOR CH 1/10W 180	1	
R243		ERJ6GEYJ332	M.RESISTOR CH 1/10W 3.3K	1	
R244		ERJ6GEYK475	M.RESISTOR CH 1/10W 4.7M	1	
R245		ERJ6GEYJ181	M.RESISTOR CH 1/10W 180	1	
R246		ERJ6GEYJ472	M.RESISTOR CH 1/10W 4.7K	1	
R247		ERJ6GEYJ563	M.RESISTOR CH 1/10W 56K	1	
R248		ERJ6GEYJ153	M.RESISTOR CH 1/10W 15K	1	
R249		VRE0034E751	M.RESISTOR CH 1/10W 750	1	
R250		VRE0034E27B	M.RESISTOR CH 1/10W 1.87K	1	
R251		ERJ6GEYK5R6	M.RESISTOR CH 1/10W 5.6	1	
R252		ERJ6GEYJ222	M.RESISTOR CH 1/10W 2.2K	1	
R253		ERJ6GEYJ272	M.RESISTOR CH 1/10W 2.7K	1	
R254		ERJ6GEYJ103	M.RESISTOR CH 1/10W 10K	1	
R255,56		ERJ6GEYJ680	M.RESISTOR CH 1/10W 68	2	
R257,58		ERJ6GEYJ154	M.RESISTOR CH 1/10W 150K	2	
R259		ERJ6GEYJ332	M.RESISTOR CH 1/10W 3.3K	1	
R260		ERJ6GEYJ750	M.RESISTOR CH 1/10W 75	1	
R261		ERJ6GEYJ470	M.RESISTOR CH 1/10W 47	1	
R262		ERJ6GEYJ471	M.RESISTOR CH 1/10W 470	1	
R263		ERJ6GEYJ391	M.RESISTOR CH 1/10W 390	1	
R264		ERJ6GEYG240	M.RESISTOR CH 1/10W 24	1	
R265		ERJ6GEYJ471	M.RESISTOR CH 1/10W 470	1	
R266		ERJ6GEYJ470	M.RESISTOR CH 1/10W 47	1	
R267		ERJ6GEYJ562	M.RESISTOR CH 1/10W 5.6K	1	
R268		ERJ6GEYJ472	M.RESISTOR CH 1/10W 4.7K	1	
R269,70		ERJ6GEYJ102	M.RESISTOR CH 1/10W 1K	2	
R271		ERJ6GEYJ222	M.RESISTOR CH 1/10W 2.2K	1	
R272		ERJ6GEYJ331	M.RESISTOR CH 1/10W 330	1	
R273		ERJ6GEYJ472	M.RESISTOR CH 1/10W 4.7K	1	
R274		ERJ6GEYJ470	M.RESISTOR CH 1/10W 47	1	
R275		ERJ6GEYJ682	M.RESISTOR CH 1/10W 6.8K	1	
R276		ERJ6GEYJ332	M.RESISTOR CH 1/10W 3.3K	1	
R277		ERJ6GEYJ222	M.RESISTOR CH 1/10W 2.2K	1	
R278		ERJ6GEYJ182	M.RESISTOR CH 1/10W 1.8K	1	
R279,80		ERJ6GEYJ470	M.RESISTOR CH 1/10W 47	2	
R281		ERJ6GEYJ222	M.RESISTOR CH 1/10W 2.2K	1	
R282,83		ERJ6GEYJ101	M.RESISTOR CH 1/10W 100	2	
R284		ERJ6GEYJ472	M.RESISTOR CH 1/10W 4.7K	1	
R285		ERJ6GEYJ222	M.RESISTOR CH 1/10W 2.2K	1	
R286		ERJ6GEYJ331	M.RESISTOR CH 1/10W 330	1	
R287		ERJ6GEYJ102	M.RESISTOR CH 1/10W 1K	1	
R288		ERJ6GEYJ470	M.RESISTOR CH 1/10W 47	1	
R289		ERJ6GEYJ101	M.RESISTOR CH 1/10W 100	1	
R290		ERJ6GEYG152	M.RESISTOR CH 1/10W 1.5K	1	
R291		ERJ6GEYJ222	M.RESISTOR CH 1/10W 2.2K	1	
R293		ERJ6GEYJ222	M.RESISTOR CH 1/10W 2.2K	1	
R301		ERJ6GEYJ470	M.RESISTOR CH 1/10W 47	1	
R302		ERJ6GEYJ681	M.RESISTOR CH 1/10W 680	1	
R303		ERJ6GEYJ102	M.RESISTOR CH 1/10W 1K	1	
R304		ERJ6GEYJ332	M.RESISTOR CH 1/10W 3.3K	1	
R305		ERJ6GEYJ470	M.RESISTOR CH 1/10W 47	1	
R306		ERJ6GEYJ681	M.RESISTOR CH 1/10W 680	1	
R307		ERJ6GEYJ102	M.RESISTOR CH 1/10W 1K	1	
R308		ERJ6GEYJ332	M.RESISTOR CH 1/10W 3.3K	1	
R309		ERJ6GEYJ222	M.RESISTOR CH 1/10W 2.2K	1	
R310		ERJ6GEYJ470	M.RESISTOR CH 1/10W 47	1	
R322		ERJ6GEYJ470	M.RESISTOR CH 1/10W 47	1	
R323		ERJ6GEYJ152	M.RESISTOR CH 1/10W 1.5K	1	
R324		ERJ6GEYJ470	M.RESISTOR CH 1/10W 47	1	

Refer to the P.C.BOARDS LIST, page 6-1-1, before using this page.

Ref.No.		Part No.	Part Name & Description	Pcs	Remarks
R325,26		ERJ6GEYJ102	M.RESISTOR CH 1/10W 1K	2	
R327		ERJ6GEYJ103	M.RESISTOR CH 1/10W 10K	1	
R328		ERJ6GEYJ105	M.RESISTOR CH 1/10W 1M	1	
R329		ERJ6GEYJ224	M.RESISTOR CH 1/10W 220K	1	
R330		ERJ6GEYJ473	M.RESISTOR CH 1/10W 47K	1	
R331		ERJ6GEYJ223	M.RESISTOR CH 1/10W 22K	1	
R332		ERJ6GEYJ152	M.RESISTOR CH 1/10W 1.5K	1	
R333,34		ERJ6GEYG471	M.RESISTOR CH 1/10W 470	2	
R335,36		ERJ6GEYJ470	M.RESISTOR CH 1/10W 47	2	
R337,38		ERJ6GEYJ222	M.RESISTOR CH 1/10W 2.2K	2	
R339,40		ERJ6GEYJ271	M.RESISTOR CH 1/10W 270	2	
R341		ERJ6GEYJ470	M.RESISTOR CH 1/10W 47	1	
R342		ERJ6GEYJ271	M.RESISTOR CH 1/10W 270	1	
R343		ERJ6GEYJ821	M.RESISTOR CH 1/10W 820	1	
R344		ERJ6GEYJ470	M.RESISTOR CH 1/10W 47	1	
R345		ERJ6GEYJ222	M.RESISTOR CH 1/10W 2.2K	1	
R346		ERJ6GEYJ102	M.RESISTOR CH 1/10W 1K	1	
R347		ERJ6GEYG331	M.RESISTOR CH 1/10W 330	1	
R348		ERJ6GEYJ153	M.RESISTOR CH 1/10W 15K	1	
R349		ERJ6GEYJ223	M.RESISTOR CH 1/10W 22K	1	
R350,51		ERJ6GEYJ220	M.RESISTOR CH 1/10W 22	2	
R352		ERJ6GEYJ470	M.RESISTOR CH 1/10W 47	1	
R353		ERJ6GEYJ152	M.RESISTOR CH 1/10W 1.5K	1	
R354		ERJ6GEYJ471	M.RESISTOR CH 1/10W 470	1	
R355		ERJ6GEYJ102	M.RESISTOR CH 1/10W 1K	1	
R356		ERJ6GEYJ221	M.RESISTOR CH 1/10W 220	1	
R357		ERJ6GEYJ222	M.RESISTOR CH 1/10W 2.2K	1	
R358		ERJ6GEYJ101	M.RESISTOR CH 1/10W 100	1	
R359		ERJ6GEYJ472	M.RESISTOR CH 1/10W 4.7K	1	
R360,61		ERJ6GEYJ473	M.RESISTOR CH 1/10W 47K	2	
R362		ERJ6GEYJ472	M.RESISTOR CH 1/10W 4.7K	1	
R363		ERJ6GEYJ223	M.RESISTOR CH 1/10W 22K	1	
R364		ERJ6GEYJ273	M.RESISTOR CH 1/10W 27K	1	
R365		ERJ6GEYJ473	M.RESISTOR CH 1/10W 47K	1	
R366		ERJ6GEYJ223	M.RESISTOR CH 1/10W 22K	1	
R367		ERJ6GEYJ104	M.RESISTOR CH 1/10W 100K	1	
R368		ERJ6GEYJ472	M.RESISTOR CH 1/10W 4.7K	1	
R369		ERJ6GEYJ103	M.RESISTOR CH 1/10W 10K	1	
R370		ERJ6GEYJ223	M.RESISTOR CH 1/10W 22K	1	
R371		ERJ6GEYJ682	M.RESISTOR CH 1/10W 6.8K	1	
R394		ERJ6GEYJ471	M.RESISTOR CH 1/10W 470	1	
R395		ERJ6GEYJ101	M.RESISTOR CH 1/10W 100	1	
R396		ERJ6GEYJ222	M.RESISTOR CH 1/10W 2.2K	1	
R397		ERJ6GEYJ470	M.RESISTOR CH 1/10W 47	1	
R398		ERJ6GEYJ152	M.RESISTOR CH 1/10W 1.5K	1	
R399,00		ERJ6GEYG301	M.RESISTOR CH 1/10W 300	2	
R401		ERJ6GEYJ470	M.RESISTOR CH 1/10W 47	1	
R402		ERJ6GEYJ102	M.RESISTOR CH 1/10W 1K	1	
R403		ERJ6GEYJ681	M.RESISTOR CH 1/10W 680	1	
R404		ERJ6GEYJ102	M.RESISTOR CH 1/10W 1K	1	
R405		ERJ6GEYJ152	M.RESISTOR CH 1/10W 1.5K	1	
R406		ERJ6GEYJ470	M.RESISTOR CH 1/10W 47	1	
R407		ERJ6GEYJ221	M.RESISTOR CH 1/10W 220	1	
R408		ERJ6GEYJ222	M.RESISTOR CH 1/10W 2.2K	1	
R409		ERJ6GEYJ470	M.RESISTOR CH 1/10W 47	1	
R410		ERJ6GEYJ152	M.RESISTOR CH 1/10W 1.5K	1	
R411,12		ERJ6GEYJ331	M.RESISTOR CH 1/10W 330	2	
R413		ERJ6GEYJ470	M.RESISTOR CH 1/10W 47	1	
R414		ERJ6GEYJ222	M.RESISTOR CH 1/10W 2.2K	1	
R415		ERJ6GEYJ470	M.RESISTOR CH 1/10W 47	1	
R426		ERJ6GEYJ470	M.RESISTOR CH 1/10W 47	1	
R427-34		ERJ6GEYJ102	M.RESISTOR CH 1/10W 1K	8	
R435,36		ERJ6GEYJ332	M.RESISTOR CH 1/10W 3.3K	2	
R437		ERJ6GEYJ101	M.RESISTOR CH 1/10W 100	1	
R438,39		ERJ6GEYJ471	M.RESISTOR CH 1/10W 470	2	
R440		ERJ6GEYJ470	M.RESISTOR CH 1/10W 47	1	
R441,42		ERJ6GEYJ681	M.RESISTOR CH 1/10W 680	2	
R443,44		ERJ6GEYJ101	M.RESISTOR CH 1/10W 100	2	
R445		ERJ6GEYJ470	M.RESISTOR CH 1/10W 47	1	
R446		ERJ6GEYJ151	M.RESISTOR CH 1/10W 150	1	
R447,48		ERJ6GEYJ222	M.RESISTOR CH 1/10W 2.2K	2	
R449		ERJ6GEYJ470	M.RESISTOR CH 1/10W 47	1	
R450,51		ERJ6GEYJ222	M.RESISTOR CH 1/10W 2.2K	2	
R452,53		ERJ6GEYJ470	M.RESISTOR CH 1/10W 47	2	
R454-65		ERJ6GEYJ102	M.RESISTOR CH 1/10W 1K	12	

Ref.No.		Part No.	Part Name & Description	Pcs	Remarks
R466		ERJ6GEYJ683	M.RESISTOR CH 1/10W 68K	1	
R467,68		ERJ6GEYJ103	M.RESISTOR CH 1/10W 10K	2	
R469,70		ERJ6GEYJ150	M.RESISTOR CH 1/10W 15	2	
R471,72		ERJ6GEYJ332	M.RESISTOR CH 1/10W 3.3K	2	
R473		ERJ6GEYJ101	M.RESISTOR CH 1/10W 100	1	
R474		ERDS2TJ222	C.RESISTOR 1/4W 2.2K	1	
R475		ERJ6GEYJ102	M.RESISTOR CH 1/10W 1K	1	
R477		ERJ6GEYJ471	M.RESISTOR CH 1/10W 470	1	
R478		ERJ6GEYJ102	M.RESISTOR CH 1/10W 1K	1	
R479		ERJ6GEYJ222	M.RESISTOR CH 1/10W 2.2K	1	
R480,81		ERJ6GEYJ471	M.RESISTOR CH 1/10W 470	2	
R482		ERJ6GEYJ470	M.RESISTOR CH 1/10W 47	1	
R483,84		ERJ6GEYJ333	M.RESISTOR CH 1/10W 33K	2	
R485,86		ERJ6GEYJ102	M.RESISTOR CH 1/10W 1K	2	
R487		ERJ6GEYJ222	M.RESISTOR CH 1/10W 2.2K	1	
R488		ERJ6GEYJ221	M.RESISTOR CH 1/10W 220	1	
R489		ERJ6GEYJ392	M.RESISTOR CH 1/10W 3.9K	1	
R490		ERJ6GEYJ470	M.RESISTOR CH 1/10W 47	1	
R491		ERJ6GEYJ333	M.RESISTOR CH 1/10W 33K	1	
R492		ERJ6GEYJ471	M.RESISTOR CH 1/10W 470	1	
R493		ERJ6GEYJ152	M.RESISTOR CH 1/10W 1.5K	1	
R494,95		ERJ6GEYJ101	M.RESISTOR CH 1/10W 100	2	
R496		ERJ6GEYJ222	M.RESISTOR CH 1/10W 2.2K	1	
R497		ERJ6GEYJ102	M.RESISTOR CH 1/10W 1K	1	
R498		ERJ6GEYJ101	M.RESISTOR CH 1/10W 100	1	
R499		ERJ6GEYJ332	M.RESISTOR CH 1/10W 3.3K	1	
R500		ERJ6GEYJ223	M.RESISTOR CH 1/10W 22K	1	
R501		ERJ6GEYJ332	M.RESISTOR CH 1/10W 3.3K	1	
R502		ERJ6GEYJ472	M.RESISTOR CH 1/10W 4.7K	1	
R503		ERJ6GEYJ103	M.RESISTOR CH 1/10W 10K	1	
R504		ERJ6GEYJ683	M.RESISTOR CH 1/10W 68K	1	
R505,06		ERJ6GEYJ473	M.RESISTOR CH 1/10W 47K	2	
R508		ERJ6GEYJ471	M.RESISTOR CH 1/10W 470	1	
R509		ERJ6GEYJ221	M.RESISTOR CH 1/10W 220	1	
R510		ERJ6GEYJ392	M.RESISTOR CH 1/10W 3.9K	1	
R511		VRE0034E27B	M.RESISTOR CH 1/10W 1.87K	1	
R512		VRE0034E751	M.RESISTOR CH 1/10W 750	1	
R513		ERJ6GEYJ332	M.RESISTOR CH 1/10W 3.3K	1	
R514		ERJ6GEYJ152	M.RESISTOR CH 1/10W 1.5K	1	
R515		ERJ6GEYJ682	M.RESISTOR CH 1/10W 6.8K	1	
R516		ERJ6GEYG301	M.RESISTOR CH 1/10W 300	1	
R518		ERJ6GEYG471	M.RESISTOR CH 1/10W 470	1	
R519		ERJ6GEYJ332	M.RESISTOR CH 1/10W 3.3K	1	
R520		ERJ6GEYJ101	M.RESISTOR CH 1/10W 100	1	
R521		ERJ6GEYJ151	M.RESISTOR CH 1/10W 150	1	
R522		VRE0034E26A	M.RESISTOR CH 1/10W 182	1	
R523		ERJ6GEYJ331	M.RESISTOR CH 1/10W 330	1	
R524		VRE0034E89A	M.RESISTOR CH 1/10W 825	1	
R525		ERJ6GEYJ331	M.RESISTOR CH 1/10W 330	1	
R526,27		ERJ6GEYJ470	M.RESISTOR CH 1/10W 47	2	
R528		ERJ6GEYJ101	M.RESISTOR CH 1/10W 100	1	
R529		ERJ6GEYJ102	M.RESISTOR CH 1/10W 1K	1	
R530		ERJ6GEYJ681	M.RESISTOR CH 1/10W 680	1	
R531,32		ERJ6GEYJ273	M.RESISTOR CH 1/10W 27K	2	
R533,34		ERJ6GEYJ183	M.RESISTOR CH 1/10W 18K	2	
R535,36		ERJ6GEYJ221	M.RESISTOR CH 1/10W 220	2	
R537		ERJ6GEYG223	M.RESISTOR CH 1/10W 22K	1	
R538		ERJ6GEYJ470	M.RESISTOR CH 1/10W 47	1	
R539		ERJ6GEYG331	M.RESISTOR CH 1/10W 330	1	
R540		VRE0034E26A	M.RESISTOR CH 1/10W 182	1	
R541		VRE0034E89A	M.RESISTOR CH 1/10W 825	1	
R542		VRE0034E59A	M.RESISTOR CH 1/10W 413	1	
R543		VRE0034E102	M.RESISTOR CH 1/10W 1K	1	
R544		ERJ6GEYJ392	M.RESISTOR CH 1/10W 3.9K	1	
R545		ERJ6GEYJ222	M.RESISTOR CH 1/10W 2.2K	1	
R546		ERJ6GEYJ470	M.RESISTOR CH 1/10W 47	1	
R547		ERJ6GEYJ222	M.RESISTOR CH 1/10W 2.2K	1	
R548		ERJ6GEYJ470	M.RESISTOR CH 1/10W 47	1	
R550		ERJ6GEYJ472	M.RESISTOR CH 1/10W 4.7K	1	
R551		ERJ6GEYJ473	M.RESISTOR CH 1/10W 47K	1	
R552		ERJ6GEYJ332	M.RESISTOR CH 1/10W 3.3K	1	
R553		ERJ6GEYJ471	M.RESISTOR CH 1/10W 470	1	
R554		ERJ6GEYJ102	M.RESISTOR CH 1/10W 1K	1	
R555		ERJ6GEYJ472	M.RESISTOR CH 1/10W 4.7K	1	
R556		ERJ6GEYJ222	M.RESISTOR CH 1/10W 2.2K	1	

Refer to the P.C.BOARDS LIST, page 6-1-1, before using this page.

Ref.No.		Part No.	Part Name & Description	Pcs	Remarks
R561-63		ERJ6GEYJ473	M.RESISTOR CH 1/10W 47K	3	
R564		ERJ6GEYJ222	M.RESISTOR CH 1/10W 2.2K	1	
R565		ERJ6GEYJ223	M.RESISTOR CH 1/10W 22K	1	
R566		ERJ6GEYJ222	M.RESISTOR CH 1/10W 2.2K	1	
R567		ERJ6GEYJ223	M.RESISTOR CH 1/10W 22K	1	
R568		ERJ6GEYJ331	M.RESISTOR CH 1/10W 330	1	
R569,70		ERJ6GEYJ470	M.RESISTOR CH 1/10W 47	2	
R571		ERJ6GEYG152	M.RESISTOR CH 1/10W 1.5K	1	
R572		ERJ6GEYJ222	M.RESISTOR CH 1/10W 2.2K	1	
R573,74		ERJ6GEYJ470	M.RESISTOR CH 1/10W 47	2	
R575,76		ERJ6GEYJ222	M.RESISTOR CH 1/10W 2.2K	2	
R577		ERJ6GEYJ471	M.RESISTOR CH 1/10W 470	1	
R578		ERJ6GEYJ470	M.RESISTOR CH 1/10W 47	1	
R579		ERJ6GEYJ152	M.RESISTOR CH 1/10W 1.5K	1	
R580		ERJ6GEYJ221	M.RESISTOR CH 1/10W 220	1	
R581		ERJ6GEYJ222	M.RESISTOR CH 1/10W 2.2K	1	
R582		ERJ6GEYJ682	M.RESISTOR CH 1/10W 6.8K	1	
R583		ERJ6GEYJ182	M.RESISTOR CH 1/10W 1.8K	1	
R584		ERJ6GEYJ471	M.RESISTOR CH 1/10W 470	1	
R585		ERJ6GEYJ332	M.RESISTOR CH 1/10W 3.3K	1	
R586		ERJ6GEYJ222	M.RESISTOR CH 1/10W 2.2K	1	
R587,88		ERJ6GEYJ224	M.RESISTOR CH 1/10W 220K	2	
R589		ERJ6GEYJ103	M.RESISTOR CH 1/10W 10K	1	
R590		ERJ6GEYJ332	M.RESISTOR CH 1/10W 3.3K	1	
R591		ERJ6GEYJ471	M.RESISTOR CH 1/10W 470	1	
R592		ERJ6GEYJ332	M.RESISTOR CH 1/10W 3.3K	1	
R593		ERJ6GEYJ273	M.RESISTOR CH 1/10W 27K	1	
R594		ERJ6GEYJ562	M.RESISTOR CH 1/10W 5.6K	1	
R595,96		ERJ6GEYK475	M.RESISTOR CH 1/10W 4.7M	2	
R597		ERJ6GEYJ272	M.RESISTOR CH 1/10W 2.7K	1	
R598		ERJ6GEYJ471	M.RESISTOR CH 1/10W 470	1	
R599		ERJ6GEYJ102	M.RESISTOR CH 1/10W 1K	1	
R600		ERJ6GEYJ472	M.RESISTOR CH 1/10W 4.7K	1	
R601		ERJ6GEYJ102	M.RESISTOR CH 1/10W 1K	1	
R602		ERJ6GEYJ472	M.RESISTOR CH 1/10W 4.7K	1	
R603,04		ERJ6GEYJ474	M.RESISTOR CH 1/10W 470K	2	
R605,06		ERJ6GEYK475	M.RESISTOR CH 1/10W 4.7M	2	
R607		ERJ6GEYJ223	M.RESISTOR CH 1/10W 22K	1	
R608,09		ERJ6GEYJ472	M.RESISTOR CH 1/10W 4.7K	2	
R610		ERJ6GEYJ104	M.RESISTOR CH 1/10W 100K	1	
R611		ERJ6GEYJ472	M.RESISTOR CH 1/10W 4.7K	1	
R612		ERJ6GEYJ471	M.RESISTOR CH 1/10W 470	1	
R613		ERJ6GEYJ223	M.RESISTOR CH 1/10W 22K	1	
R614		ERJ6GEYJ224	M.RESISTOR CH 1/10W 220K	1	
R615		ERJ6GEYJ103	M.RESISTOR CH 1/10W 10K	1	
R616		ERJ6GEYJ104	M.RESISTOR CH 1/10W 100K	1	
R617-19		ERJ6GEYJ103	M.RESISTOR CH 1/10W 10K	3	
R620		ERJ6GEYJ101	M.RESISTOR CH 1/10W 100	1	
R621,22		ERJ6GEYJ474	M.RESISTOR CH 1/10W 470K	2	
R623		ERJ6GEYJ153	M.RESISTOR CH 1/10W 15K	1	
R624-26		ERJ6GEYJ103	M.RESISTOR CH 1/10W 10K	3	
R627		ERJ6GEYJ472	M.RESISTOR CH 1/10W 4.7K	1	
R628		ERJ6GEYJ223	M.RESISTOR CH 1/10W 22K	1	
R629		ERJ6GEYJ472	M.RESISTOR CH 1/10W 4.7K	1	
R630,31		ERJ6GEYJ101	M.RESISTOR CH 1/10W 100	2	
R632		ERJ6GEYJ102	M.RESISTOR CH 1/10W 1K	1	
R633		ERDS2TJ331	C.RESISTOR 1/4W 330	1	
R635,36		ERJ6GEYJ470	M.RESISTOR CH 1/10W 47	2	
R637		ERJ6GEYJ102	M.RESISTOR CH 1/10W 1K	1	
R639,40		ERJ6GEYJ331	M.RESISTOR CH 1/10W 330	2	
R643		ERJ6GEYJ331	M.RESISTOR CH 1/10W 330	1	
R644,45		ERJ6GEYJ470	M.RESISTOR CH 1/10W 47	2	
R646		ERJ6GEYJ682	M.RESISTOR CH 1/10W 6.8K	1	
R647,48		ERJ6GEYJ221	M.RESISTOR CH 1/10W 220	2	
R649		ERJ6GEYJ682	M.RESISTOR CH 1/10W 6.8K	1	
R650-53		ERJ6GEYJ101	M.RESISTOR CH 1/10W 100	4	
R654,55		ERJ6GEYJ681	M.RESISTOR CH 1/10W 680	2	
R656		ERJ6GEYJ470	M.RESISTOR CH 1/10W 47	1	
R660		ERDS2TJ331	C.RESISTOR 1/4W 330	1	
R661		ERDS2TJ472	C.RESISTOR 1/4W 4.7K	1	
R701		ERJ6GEYJ470	M.RESISTOR CH 1/10W 47	1	
R702		ERJ6GEYJ102	M.RESISTOR CH 1/10W 1K	1	
R703		ERJ6GEYJ821	M.RESISTOR CH 1/10W 820	1	
R704		ERJ6GEY0R00	M.RESISTOR CH 1/10W 0	1	
R705		ERJ6GEYJ332	M.RESISTOR CH 1/10W 3.3K	1	

Ref.No.		Part No.	Part Name & Description	Pcs	Remarks
R712		ERJ6GEYJ470	M.RESISTOR CH 1/10W 47	1	
R723,24		ERJ6GEYJ101	M.RESISTOR CH 1/10W 100	2	
R725		ERJ6GEYJ102	M.RESISTOR CH 1/10W 1K	1	
R726		ERJ6GEYJ470	M.RESISTOR CH 1/10W 47	1	
R727		ERJ6GEYG471	M.RESISTOR CH 1/10W 470	1	
R728,29		ERJ6GEYJ470	M.RESISTOR CH 1/10W 47	2	
R730		ERJ6GEYG471	M.RESISTOR CH 1/10W 470	1	
R731		ERJ6GEYJ222	M.RESISTOR CH 1/10W 2.2K	1	
R732,33		ERJ6GEYG821	M.RESISTOR CH 1/10W 820	2	
R734		ERJ6GEYJ222	M.RESISTOR CH 1/10W 2.2K	1	
R735		ERJ6GEYJ470	M.RESISTOR CH 1/10W 47	1	
R736		ERJ6GEYJ271	M.RESISTOR CH 1/10W 270	1	
R737		ERJ6GEYJ332	M.RESISTOR CH 1/10W 3.3K	1	
R738		ERJ6GEYJ821	M.RESISTOR CH 1/10W 820	1	
R739		ERJ6GEYJ470	M.RESISTOR CH 1/10W 47	1	
R740		ERJ6GEYJ222	M.RESISTOR CH 1/10W 2.2K	1	
R741		ERJ6GEYJ272	M.RESISTOR CH 1/10W 2.7K	1	
R742		ERJ6GEYG331	M.RESISTOR CH 1/10W 330	1	
R743		ERJ6GEYJ153	M.RESISTOR CH 1/10W 15K	1	
R744		ERJ6GEYJ473	M.RESISTOR CH 1/10W 47K	1	
R745,46		ERJ6GEYJ220	M.RESISTOR CH 1/10W 22	2	
R747		ERJ6GEYJ470	M.RESISTOR CH 1/10W 47	1	
R748		ERJ6GEYJ152	M.RESISTOR CH 1/10W 1.5K	1	
R749		ERJ6GEYJ331	M.RESISTOR CH 1/10W 330	1	
R750		ERJ6GEYJ102	M.RESISTOR CH 1/10W 1K	1	
R751		ERJ6GEYJ221	M.RESISTOR CH 1/10W 220	1	
R752		ERJ6GEYJ222	M.RESISTOR CH 1/10W 2.2K	1	
R753		ERJ6GEYJ472	M.RESISTOR CH 1/10W 4.7K	1	
R754		ERJ6GEYJ103	M.RESISTOR CH 1/10W 10K	1	
R755		ERJ6GEYJ472	M.RESISTOR CH 1/10W 4.7K	1	
R756		ERJ6GEYJ682	M.RESISTOR CH 1/10W 6.8K	1	
R757		ERJ6GEYJ471	M.RESISTOR CH 1/10W 470	1	
R758		ERJ6GEYJ101	M.RESISTOR CH 1/10W 100	1	
R759		ERJ6GEYJ222	M.RESISTOR CH 1/10W 2.2K	1	
R760		ERJ6GEYJ470	M.RESISTOR CH 1/10W 47	1	
R761		ERJ6GEYJ152	M.RESISTOR CH 1/10W 1.5K	1	
R762,63		ERJ6GEYG301	M.RESISTOR CH 1/10W 300	2	
R764		ERJ6GEYJ470	M.RESISTOR CH 1/10W 47	1	
R765		ERJ6GEYJ102	M.RESISTOR CH 1/10W 1K	1	
R766		ERJ6GEYJ681	M.RESISTOR CH 1/10W 680	1	
R767		ERJ6GEYJ102	M.RESISTOR CH 1/10W 1K	1	
R768		ERJ6GEYJ152	M.RESISTOR CH 1/10W 1.5K	1	
R769		ERJ6GEYJ470	M.RESISTOR CH 1/10W 47	1	
R770		ERJ6GEYJ221	M.RESISTOR CH 1/10W 220	1	
R771		ERJ6GEYJ222	M.RESISTOR CH 1/10W 2.2K	1	
R772		ERJ6GEYJ470	M.RESISTOR CH 1/10W 47	1	
R773		ERJ6GEYJ152	M.RESISTOR CH 1/10W 1.5K	1	
R774,75		ERJ6GEYJ331	M.RESISTOR CH 1/10W 330	2	
R776		ERJ6GEYJ470	M.RESISTOR CH 1/10W 47	1	
R777		ERJ6GEYJ222	M.RESISTOR CH 1/10W 2.2K	1	
R778		ERJ6GEYJ470	M.RESISTOR CH 1/10W 47	1	
R789		ERJ6GEYJ470	M.RESISTOR CH 1/10W 47	1	
R790-97		ERJ6GEYJ102	M.RESISTOR CH 1/10W 1K	8	
R798,99		ERJ6GEYJ332	M.RESISTOR CH 1/10W 3.3K	2	
R800		ERJ6GEYJ101	M.RESISTOR CH 1/10W 100	1	
R801,02		ERJ6GEYJ471	M.RESISTOR CH 1/10W 470	2	
R803		ERJ6GEYJ470	M.RESISTOR CH 1/10W 47	1	
R804,05		ERJ6GEYJ681	M.RESISTOR CH 1/10W 680	2	
R806,07		ERJ6GEYJ101	M.RESISTOR CH 1/10W 100	2	
R808		ERJ6GEYJ470	M.RESISTOR CH 1/10W 47	1	
R809		ERJ6GEYJ151	M.RESISTOR CH 1/10W 150	1	
R810,11		ERJ6GEYJ222	M.RESISTOR CH 1/10W 2.2K	2	
R812		ERJ6GEYJ470	M.RESISTOR CH 1/10W 47	1	
R813,14		ERJ6GEYJ222	M.RESISTOR CH 1/10W 2.2K	2	
R815,16		ERJ6GEYJ470	M.RESISTOR CH 1/10W 47	2	
R817-28		ERJ6GEYJ102	M.RESISTOR CH 1/10W 1K	12	
R829		ERJ6GEYJ683	M.RESISTOR CH 1/10W 68K	1	
R830,31		ERJ6GEYJ103	M.RESISTOR CH 1/10W 10K	2	
R832,33		ERJ6GEYJ150	M.RESISTOR CH 1/10W 15	2	
R834,35		ERJ6GEYJ332	M.RESISTOR CH 1/10W 3.3K	2	
R836		ERJ6GEYJ101	M.RESISTOR CH 1/10W 100	1	
R837		ERDS2TJ222	C.RESISTOR 1/4W 2.2K	1	
R838-40		ERJ6GEYJ102	M.RESISTOR CH 1/10W 1K	3	
R842		ERJ6GEYJ222	M.RESISTOR CH 1/10W 2.2K	1	
R843,44		ERJ6GEYJ471	M.RESISTOR CH 1/10W 470	2	

Refer to the P.C.BOARDS LIST, page 6-1-1, before using this page.

Ref.No.		Part No.	Part Name & Description	Pcs	Remarks
R845		ERJ6GEYJ470	M.RESISTOR CH 1/10W 47	1	
R846,47		ERJ6GEYJ333	M.RESISTOR CH 1/10W 33K	2	
R848,49		ERJ6GEYJ102	M.RESISTOR CH 1/10W 1K	2	
R850		ERJ6GEYJ222	M.RESISTOR CH 1/10W 2.2K	1	
R851		ERJ6GEYJ221	M.RESISTOR CH 1/10W 220	1	
R852		ERJ6GEYJ392	M.RESISTOR CH 1/10W 3.9K	1	
R853		ERJ6GEYJ470	M.RESISTOR CH 1/10W 47	1	
R854		ERJ6GEYJ471	M.RESISTOR CH 1/10W 470	1	
R855		ERJ6GEYJ152	M.RESISTOR CH 1/10W 1.5K	1	
R856,57		ERJ6GEYJ101	M.RESISTOR CH 1/10W 100	2	
R858		ERJ6GEYJ222	M.RESISTOR CH 1/10W 2.2K	1	
R859		ERJ6GEYJ102	M.RESISTOR CH 1/10W 1K	1	
R860		ERJ6GEYJ101	M.RESISTOR CH 1/10W 100	1	
R861		ERJ6GEYJ332	M.RESISTOR CH 1/10W 3.3K	1	
R862		ERJ6GEYJ223	M.RESISTOR CH 1/10W 22K	1	
R863		ERJ6GEYJ332	M.RESISTOR CH 1/10W 3.3K	1	
R864		ERJ6GEYJ472	M.RESISTOR CH 1/10W 4.7K	1	
R865		ERJ6GEYJ103	M.RESISTOR CH 1/10W 10K	1	
R866		ERJ6GEYJ683	M.RESISTOR CH 1/10W 68K	1	
R867		ERJ6GEYJ473	M.RESISTOR CH 1/10W 47K	1	
R868		ERJ6GEYJ471	M.RESISTOR CH 1/10W 470	1	
R870		ERJ6GEYJ471	M.RESISTOR CH 1/10W 470	1	
R871		ERJ6GEYJ221	M.RESISTOR CH 1/10W 220	1	
R872		ERJ6GEYJ392	M.RESISTOR CH 1/10W 3.9K	1	
R873		VRE0034E27B	M.RESISTOR CH 1/10W 1.87K	1	
R874		VRE0034E751	M.RESISTOR CH 1/10W 750	1	
R875		ERJ6GEYJ332	M.RESISTOR CH 1/10W 3.3K	1	
R876		ERJ6GEYJ152	M.RESISTOR CH 1/10W 1.5K	1	
R878		ERJ6GEYG301	M.RESISTOR CH 1/10W 300	1	
R879		ERJ6GEYG471	M.RESISTOR CH 1/10W 470	1	
R880		ERJ6GEYJ332	M.RESISTOR CH 1/10W 3.3K	1	
R881		ERJ6GEYJ101	M.RESISTOR CH 1/10W 100	1	
R882		ERJ6GEYJ151	M.RESISTOR CH 1/10W 150	1	
R883		VRE0034E26A	M.RESISTOR CH 1/10W 182	1	
R884		ERJ6GEYJ331	M.RESISTOR CH 1/10W 330	1	
R885		VRE0034E89A	M.RESISTOR CH 1/10W 825	1	
R886,87		ERJ6GEYJ470	M.RESISTOR CH 1/10W 47	2	
R888		ERJ6GEYJ331	M.RESISTOR CH 1/10W 330	1	
R889		ERJ6GEYJ681	M.RESISTOR CH 1/10W 680	1	
R890		ERJ6GEYJ273	M.RESISTOR CH 1/10W 27K	1	
R891		ERJ6GEYJ183	M.RESISTOR CH 1/10W 18K	1	
R892		ERJ6GEYJ221	M.RESISTOR CH 1/10W 220	1	
R893		ERJ6GEYJ273	M.RESISTOR CH 1/10W 27K	1	
R894		ERJ6GEYJ183	M.RESISTOR CH 1/10W 18K	1	
R895		ERJ6GEYJ221	M.RESISTOR CH 1/10W 220	1	
R896		ERJ6GEYG223	M.RESISTOR CH 1/10W 22K	1	
R897		ERJ6GEYJ470	M.RESISTOR CH 1/10W 47	1	
R898		VRE0034E26A	M.RESISTOR CH 1/10W 182	1	
R899		VRE0034E89A	M.RESISTOR CH 1/10W 825	1	
R900		ERJ6GEYG331	M.RESISTOR CH 1/10W 330	1	
R901		VRE0034E59A	M.RESISTOR CH 1/10W 413	1	
R902		VRE0034E102	M.RESISTOR CH 1/10W 1K	1	
R903		ERJ6GEYJ392	M.RESISTOR CH 1/10W 3.9K	1	
R904		ERJ6GEYJ470	M.RESISTOR CH 1/10W 47	1	
R905,06		ERJ6GEYJ222	M.RESISTOR CH 1/10W 2.2K	2	
R907		ERJ6GEYJ470	M.RESISTOR CH 1/10W 47	1	
R909		ERJ6GEYJ472	M.RESISTOR CH 1/10W 4.7K	1	
R910		ERJ6GEYJ473	M.RESISTOR CH 1/10W 47K	1	
R911		ERJ6GEYJ332	M.RESISTOR CH 1/10W 3.3K	1	
R912		ERJ6GEYJ471	M.RESISTOR CH 1/10W 470	1	
R913		ERJ6GEYJ102	M.RESISTOR CH 1/10W 1K	1	
R914		ERJ6GEYJ472	M.RESISTOR CH 1/10W 4.7K	1	
R915		ERJ6GEYJ222	M.RESISTOR CH 1/10W 2.2K	1	
R920		ERJ6GEYJ331	M.RESISTOR CH 1/10W 330	1	
R921,22		ERJ6GEYJ470	M.RESISTOR CH 1/10W 47	2	
R923		ERJ6GEYG152	M.RESISTOR CH 1/10W 1.5K	1	
R924		ERJ6GEYJ222	M.RESISTOR CH 1/10W 2.2K	1	
R925,26		ERJ6GEYJ470	M.RESISTOR CH 1/10W 47	2	
R927,28		ERJ6GEYJ222	M.RESISTOR CH 1/10W 2.2K	2	
R929		ERJ6GEYJ471	M.RESISTOR CH 1/10W 470	1	
R930		ERJ6GEYJ470	M.RESISTOR CH 1/10W 47	1	
R931		ERJ6GEYJ152	M.RESISTOR CH 1/10W 1.5K	1	
R932		ERJ6GEYJ221	M.RESISTOR CH 1/10W 220	1	
R933		ERJ6GEYJ222	M.RESISTOR CH 1/10W 2.2K	1	
R934		ERJ6GEYJ682	M.RESISTOR CH 1/10W 6.8K	1	

Ref.No.		Part No.	Part Name & Description	Pcs	Remarks
R935		ERJ6GEYJ182	M.RESISTOR CH 1/10W 1.8K	1	
R936		ERJ6GEYJ471	M.RESISTOR CH 1/10W 470	1	
R937,38		ERJ6GEYJ332	M.RESISTOR CH 1/10W 3.3K	2	
R939		ERJ6GEYJ471	M.RESISTOR CH 1/10W 470	1	
R940		ERJ6GEYJ103	M.RESISTOR CH 1/10W 10K	1	
R941		ERJ6GEYJ683	M.RESISTOR CH 1/10W 68K	1	
R942		ERJ6GEYJ222	M.RESISTOR CH 1/10W 2.2K	1	
R943		ERJ6GEYJ273	M.RESISTOR CH 1/10W 27K	1	
R944		ERJ6GEYJ682	M.RESISTOR CH 1/10W 6.8K	1	
R945,46		ERJ6GEYK475	M.RESISTOR CH 1/10W 4.7M	2	
R947		ERJ6GEYJ272	M.RESISTOR CH 1/10W 2.7K	1	
R948		ERJ6GEYJ471	M.RESISTOR CH 1/10W 470	1	
R949		ERJ6GEYJ102	M.RESISTOR CH 1/10W 1K	1	
R950		ERJ6GEYJ472	M.RESISTOR CH 1/10W 4.7K	1	
R951		ERJ6GEYJ102	M.RESISTOR CH 1/10W 1K	1	
R952		ERJ6GEYJ472	M.RESISTOR CH 1/10W 4.7K	1	
R953,54		ERJ6GEYJ105	M.RESISTOR CH 1/10W 1M	2	
R955,56		ERJ6GEYK475	M.RESISTOR CH 1/10W 4.7M	2	
R957,58		ERJ6GEYJ472	M.RESISTOR CH 1/10W 4.7K	2	
R959		ERJ6GEYJ471	M.RESISTOR CH 1/10W 470	1	
R960		ERJ6GEYJ153	M.RESISTOR CH 1/10W 15K	1	
R961-63		ERJ6GEYJ103	M.RESISTOR CH 1/10W 10K	3	
R964		ERJ6GEYJ101	M.RESISTOR CH 1/10W 100	1	
R965		ERJ6GEYJ102	M.RESISTOR CH 1/10W 1K	1	
R966-68		ERJ6GEYJ103	M.RESISTOR CH 1/10W 10K	3	
R969,70		ERJ6GEYJ472	M.RESISTOR CH 1/10W 4.7K	2	
R971		ERJ6GEYJ223	M.RESISTOR CH 1/10W 22K	1	
R972		ERDS2TJ331	C.RESISTOR 1/4W 330	1	
R973		ERJ6GEYJ102	M.RESISTOR CH 1/10W 1K	1	
R975,76		ERJ6GEYJ470	M.RESISTOR CH 1/10W 47	2	
R977		ERJ6GEYJ682	M.RESISTOR CH 1/10W 6.8K	1	
R978,79		ERJ6GEYJ221	M.RESISTOR CH 1/10W 220	2	
R980		ERJ6GEYJ682	M.RESISTOR CH 1/10W 6.8K	1	
R981,82		ERJ6GEYJ101	M.RESISTOR CH 1/10W 100	2	
R983,84		ERJ6GEYJ681	M.RESISTOR CH 1/10W 680	2	
R985		ERJ6GEYJ470	M.RESISTOR CH 1/10W 47	1	
R986,87		ERJ6GEYJ331	M.RESISTOR CH 1/10W 330	2	
R989		ERJ6GEYJ472	M.RESISTOR CH 1/10W 4.7K	1	
R993		ERDS2TJ331	C.RESISTOR 1/4W 330	1	
R994		ERDS2TJ472	C.RESISTOR 1/4W 4.7K	1	
SW1		VSS0126	SWITCH	1	
SW201,02		VSS0126	SWITCH	2	
SW304		VSS0126	SWITCH	1	
SW305,06		VSS0207	SWITCH	2	
SW704		VSS0126	SWITCH	1	
TP3-P8		VJR0646	TEST POINT	6	
TP201-07		VJR0646	TEST POINT	7	
TP301-04		VJR0646	TEST POINT	4	
TP307-13		VJR0646	TEST POINT	7	
TP315-17		VJR0646	TEST POINT	3	
TP701-12		VJR0646	TEST POINT	12	
TP711		VJR0400Y	TEST POINT	1	FOR VEP83098E
TPG1,G2		VJR0646	TEST POINT	2	
TPG201,02		VJR0646	TEST POINT	2	
TPG301-03		VJR0646	TEST POINT	3	
TPG701-03		VJR0646	TEST POINT	3	
VC301		ECV1ZW10X53T	V.CAPACITOR 10P	1	
VC701		ECV1ZW20X53T	V.CAPACITOR 20P	1	
VL201		EIR7QF015B	COIL	1	
VL301,02		EIR7QF016B	COIL	2	
VL303		EIR7QF015B	COIL	1	
VL701		EIR7QF016B	COIL	1	
VL702		EIR7QF015B	COIL	1	

Refer to the P.C.BOARDS LIST, page 6-1-1, before using this page.

Ref.No.		Part No.	Part Name & Description	Pcs	Remarks
VR1		VRV0064B501	V.RESISTOR 500	1	
VR3		VRV0109B202	V.RESISTOR 2K	1	
VR4		VRV0109B102	V.RESISTOR 1K	1	
VR5		VRV0109B203	V.RESISTOR 20K	1	
VR6		VRV0109B501	V.RESISTOR 500	1	
VR7		VRV0064B103	V.RESISTOR 10K	1	
VR8		VRV0109B503	V.RESISTOR 50K	1	
VR9		VRV0109B502	V.RESISTOR 5K	1	
VR10		VRV0109B503	V.RESISTOR 50K	1	
VR11		VRV0109B104	V.RESISTOR 100K	1	
VR201		VRV0064B501	V.RESISTOR 500	1	
VR202		VRV0109B203	V.RESISTOR 20K	1	
VR203		VRV0109B102	V.RESISTOR 1K	1	
VR204		VRV0109B501	V.RESISTOR 500	1	
VR205		VRV0109B503	V.RESISTOR 50K	1	
VR206		VRV0109B502	V.RESISTOR 5K	1	
VR207,08		VRV0109B503	V.RESISTOR 50K	2	
VR209		VRV0109B104	V.RESISTOR 100K	1	
VR301		VRV0109B501	V.RESISTOR 500	1	
VR302		VRV0109B102	V.RESISTOR 1K	1	
VR303		VRV0109B501	V.RESISTOR 500	1	
VR304		VRV0109B102	V.RESISTOR 1K	1	
VR309		VRV0109B101	V.RESISTOR 100	1	
VR310		VRV0109B502	V.RESISTOR 5K	1	
VR311		VRV0109B501	V.RESISTOR 500	1	
VR312		VRV0064B104	V.RESISTOR 100K	1	
VR315,16		VRV0064B502	V.RESISTOR 5K	2	
VR317		VRV0109B501	V.RESISTOR 500	1	
VR318		VRV0109B203	V.RESISTOR 20K	1	
VR319,20		VRV0109B102	V.RESISTOR 1K	2	
VR321		VRV0109B203	V.RESISTOR 20K	1	
VR322		VRV0109B102	V.RESISTOR 1K	1	
VR323		VRV0109B203	V.RESISTOR 20K	1	
VR324		VRV0109B102	V.RESISTOR 1K	1	
VR325		VRV0109B202	V.RESISTOR 2K	1	
VR326		VRV0109B102	V.RESISTOR 1K	1	
VR327		VRV0064B203	V.RESISTOR 20K	1	
VR328		VRV0109B203	V.RESISTOR 20K	1	
VR329		VRV0112B504	V.RESISTOR 500K	1	
VR331		VRV0109B103	V.RESISTOR 10K	1	
VR701,02		VRV0109B501	V.RESISTOR 500	2	
VR712,13		VRV0064B502	V.RESISTOR 5K	2	
VR714		VRV0109B501	V.RESISTOR 500	1	
VR715		VRV0109B203	V.RESISTOR 20K	1	
VR716,17		VRV0109B102	V.RESISTOR 1K	2	
VR718		VRV0109B203	V.RESISTOR 20K	1	
VR719		VRV0109B102	V.RESISTOR 1K	1	
VR720		VRV0109B203	V.RESISTOR 20K	1	
VR721		VRV0109B102	V.RESISTOR 1K	1	
VR722		VRV0109B202	V.RESISTOR 2K	1	
VR723		VRV0109B102	V.RESISTOR 1K	1	
VR724		VRV0064B203	V.RESISTOR 20K	1	
VR725		VRV0109B504	V.RESISTOR 500K	1	
VR726		VRV0109B103	V.RESISTOR 10K	1	
			MISCELLANEOUS		
		VJR0422	RUG PIN	2	FOR VEP83098E
		VML2143	CARD PULLER	1	
		VML2144	CARD PULLER	1	
		VMS4174	PIN	6	
		VMZ1547	BARRIER	1	
		VSC3056	SHIELD CASE	1	
		VXA3966	P.C.B. SHIELD PLATE	1	
		XNG26E	NUT	4	
		XYNV3+K6FR	SCREW	6	
		XYN26+C12	SCREW	4	

Ref.No.		Part No.	Part Name & Description	Pcs	Remarks

Refer to the P.C.BOARDS LIST, page 6-1-1, before using this page.

Ref.No.		Part No.	Part Name & Description	Pcs	Remarks
	■	VEP83098F	P.C.BOARD W/COMPONENT		FOR AU-63-E,B
			W3 MOD & DEMOD		
			CAPACITORS		
C62		ECUM1E104ZFN	C.CAPACITOR CH 25V 0.1U	1	
C63		ECEA1CU101	E.CAPACITOR 16V 100U	1	
C64		ECUM1E104ZFN	C.CAPACITOR CH 25V 0.1U	1	
C65		ECSF1CE106	T.CAPACITOR 16V 10U	1	
C66		ECUM1E104ZFN	C.CAPACITOR CH 25V 0.1U	1	
C67		ECSF1CE106	T.CAPACITOR 16V 10U	1	
C68		ECUM1E104ZFN	C.CAPACITOR CH 25V 0.1U	1	
C69,70		ECSF1CE106	T.CAPACITOR 16V 10U	2	
C71		ECUM1E104ZFN	C.CAPACITOR CH 25V 0.1U	1	
C72		ECEA1CU101	E.CAPACITOR 16V 100U	1	
C301,02		ECUM1H103KBN	C.CAPACITOR CH 50V 0.01U	2	
C303		ECUM1H270JCN	C.CAPACITOR CH 50V 27P	1	
C304,05		ECUM1H103KBN	C.CAPACITOR CH 50V 0.01U	2	
C306		ECUM1H270JCN	C.CAPACITOR CH 50V 27P	1	
C307		ECEA1AU101	E.CAPACITOR 10V 100U	1	
C308,09		ECUM1H103KBN	C.CAPACITOR CH 50V 0.01U	2	
C310		ECEA1AU101	E.CAPACITOR 10V 100U	1	
C311		ECUM1H103KBN	C.CAPACITOR CH 50V 0.01U	1	
C316		ECUM1E104ZFN	C.CAPACITOR CH 25V 0.1U	1	
C322		ECUM1E104ZFN	C.CAPACITOR CH 25V 0.1U	1	
C325		ECUM1E104ZFN	C.CAPACITOR CH 25V 0.1U	1	
C326		ECUM1H103KBN	C.CAPACITOR CH 50V 0.01U	1	
C327		ECUM1E104ZFN	C.CAPACITOR CH 25V 0.1U	1	
C328,29		ECUM1H103KBN	C.CAPACITOR CH 50V 0.01U	2	
C340		ECUM1H103KBN	C.CAPACITOR CH 50V 0.01U	1	
C341		ECEA1CN100S	E.CAPACITOR 16V 10U	1	
C342		ECUM1H103KBN	C.CAPACITOR CH 50V 0.01U	1	
C343		ECUM1H150JCN	C.CAPACITOR CH 50V 15P	1	
C344		ECUM1H101JCN	C.CAPACITOR CH 50V 100P	1	
C345		ECUM1H100DCN	C.CAPACITOR CH 50V 10P	1	
C346		ECUM1H103KBN	C.CAPACITOR CH 50V 0.01U	1	
C347,48		ECEA1AU101	E.CAPACITOR 10V 100U	2	
C349		ECUM1H103KBN	C.CAPACITOR CH 50V 0.01U	1	
C351		ECUM1H221JCN	C.CAPACITOR CH 50V 220P	1	
C352		ECUM1H103KBN	C.CAPACITOR CH 50V 0.01U	1	
C353		ECUM1H680JCN	C.CAPACITOR CH 50V 68P	1	
C354,55		ECUM1H103KBN	C.CAPACITOR CH 50V 0.01U	2	
C356		ECUM1E104ZFN	C.CAPACITOR CH 25V 0.1U	1	
C357		ECEA1HU2R2	E.CAPACITOR 50V 2.2U	1	
C358		ECEA1AU101	E.CAPACITOR 10V 100U	1	
C359		ECUM1H103KBN	C.CAPACITOR CH 50V 0.01U	1	
C360		ECUM1H270JCN	C.CAPACITOR CH 50V 27P	1	
C363		ECUM1E104ZFN	C.CAPACITOR CH 25V 0.1U	1	
C373		ECEA1AU101	E.CAPACITOR 10V 100U	1	
C374		ECUM1H103KBN	C.CAPACITOR CH 50V 0.01U	1	
C375		ECEA1AU101	E.CAPACITOR 10V 100U	1	
C376		ECUM1H103KBN	C.CAPACITOR CH 50V 0.01U	1	
C380		ECUM1E104ZFN	C.CAPACITOR CH 25V 0.1U	1	
C381		ECUM1H103KBN	C.CAPACITOR CH 50V 0.01U	1	
C382		ECUM1E104ZFN	C.CAPACITOR CH 25V 0.1U	1	
C383		ECEA1AU101	E.CAPACITOR 10V 100U	1	
C386		ECUM1H050DCN	C.CAPACITOR CH 50V 50P	1	
C387		ECUM1H100DCN	C.CAPACITOR CH 50V 10P	1	
C389		ECUM1H331JCN	C.CAPACITOR CH 50V 330P	1	
C391		ECUM1H470JCN	C.CAPACITOR CH 50V 47P	1	
C392		ECUM1H103KBN	C.CAPACITOR CH 50V 0.01U	1	
C393		ECEA1AU101	E.CAPACITOR 10V 100U	1	
C394		ECUM1H103KBN	C.CAPACITOR CH 50V 0.01U	1	
C395		ECUM1E104ZFN	C.CAPACITOR CH 25V 0.1U	1	
C396,97		ECUM1H103KBN	C.CAPACITOR CH 50V 0.01U	2	
C398		ECUM1H180JCN	C.CAPACITOR CH 50V 18P	1	
C399		ECUM1H103KBN	C.CAPACITOR CH 50V 0.01U	1	
C400		ECUM1E104ZFN	C.CAPACITOR CH 25V 0.1U	1	
C401-03		ECUM1H103KBN	C.CAPACITOR CH 50V 0.01U	3	

Ref.No.		Part No.	Part Name & Description	Pcs	Remarks
C404		ECEA1AU101	E.CAPACITOR 10V 100U	1	
C405-07		ECUM1E104ZFN	C.CAPACITOR CH 25V 0.1U	3	
C408,09		ECUM1H270JCN	C.CAPACITOR CH 50V 27P	2	
C410		ECEA1AU471	E.CAPACITOR 10V 470U	1	
C411		ECUM1E104ZFN	C.CAPACITOR CH 25V 0.1U	1	
C412		ECUM1H221JCN	C.CAPACITOR CH 50V 220P	1	
C413		ECEA1AU101	E.CAPACITOR 10V 100U	1	
C414		ECUM1H470JCN	C.CAPACITOR CH 50V 47P	1	
C415		ECUM1H180JCN	C.CAPACITOR CH 50V 18P	1	
C416		ECUM1H181JCN	C.CAPACITOR CH 50V 180P	1	
C417,18		ECUM1E104ZFN	C.CAPACITOR CH 25V 0.1U	2	
C419		ECUM1H331JCN	C.CAPACITOR CH 50V 330P	1	
C420		ECUM1H220JCN	C.CAPACITOR CH 50V 22P	1	
C421		ECUM1H680JCN	C.CAPACITOR CH 50V 68P	1	
C422		ECUM1H330JCN	C.CAPACITOR CH 50V 33P	1	
C423		ECEA1AU101	E.CAPACITOR 10V 100U	1	
C424		ECEA1CU100	E.CAPACITOR 16V 10U	1	
C425		ECUM1H221JCN	C.CAPACITOR CH 50V 220P	1	
C426		VCM0044	M.CAPACITOR 130P	1	
C427		VCM0023	M.CAPACITOR 379P	1	
C428		ECUM1H680JCN	C.CAPACITOR CH 50V 68P	1	
C429		ECUM1H390JCN	C.CAPACITOR CH 50V 39P	1	
C430		ECUM1H331JCN	C.CAPACITOR CH 50V 330P	1	
C431		ECUM1H270JCN	C.CAPACITOR CH 50V 27P	1	
C432		ECEA0JU221	E.CAPACITOR 6.3V 220U	1	
C433		ECUM1H050DCN	C.CAPACITOR CH 50V 50P	1	
C434		ECUM1H470JCN	C.CAPACITOR CH 50V 47P	1	
C435		ECUM1H020CCN	C.CAPACITOR CH 50V 2P	1	
C436,37		ECUM1E104ZFN	C.CAPACITOR CH 25V 0.1U	2	
C440		ECUM1H470JCN	C.CAPACITOR CH 50V 47P	1	
C442,43		ECEA1CU221	E.CAPACITOR 16V 220U	2	
C444,45		ECUM1H103KBN	C.CAPACITOR CH 50V 0.01U	2	
C446,47		VCM0027	V.CAPACITOR	2	
C448		ECEA1AU101	E.CAPACITOR 10V 100U	1	
C449		ECUM1E104ZFN	C.CAPACITOR CH 25V 0.1U	1	
C450		ECEA1AU101	E.CAPACITOR 10V 100U	1	
C451		ECEA1CU101	E.CAPACITOR 16V 100U	1	
C453		ECUM1E104ZFN	C.CAPACITOR CH 25V 0.1U	1	
C454		ECUM1H820JCN	C.CAPACITOR CH 50V 82P	1	
C455,56		ECUM1H103KBN	C.CAPACITOR CH 50V 0.01U	2	
C457,58		ECEA1AU101	E.CAPACITOR 10V 100U	2	
C459		ECUM1H151JCN	C.CAPACITOR CH 50V 150P	1	
C460		ECUM1H471JCN	C.CAPACITOR CH 50V 470P	1	
C461,62		ECEA1CU100	E.CAPACITOR 16V 10U	2	
C463		ECUM1H181JCN	C.CAPACITOR CH 50V 180P	1	
C464		ECUM1H680JCN	C.CAPACITOR CH 50V 68P	1	
C465,66		ECEA1AU101	E.CAPACITOR 10V 100U	2	
C467		ECUM1E104ZFN	C.CAPACITOR CH 25V 0.1U	1	
C468		ECUM1H103KBN	C.CAPACITOR CH 50V 0.01U	1	
C469		ECUM1H220JCN	C.CAPACITOR CH 50V 22P	1	
C470		ECCF1H330JC	C.CAPACITOR 50V 33P	1	
C471		ECCF1H060DC	C.CAPACITOR 50V 6P	1	
C701,02		ECUM1H103KBN	C.CAPACITOR CH 50V 0.01U	2	
C703		ECEA1AU101	E.CAPACITOR 10V 100U	1	
C704,05		ECUM1H103KBN	C.CAPACITOR CH 50V 0.01U	2	
C706		ECUM1H330JCN	C.CAPACITOR CH 50V 33P	1	
C714		ECUM1H103KBN	C.CAPACITOR CH 50V 0.01U	1	
C725		ECUM1H180JCN	C.CAPACITOR CH 50V 18P	1	
C726		ECUM1H103KBN	C.CAPACITOR CH 50V 0.01U	1	
C727		ECUM1E104ZFN	C.CAPACITOR CH 25V 0.1U	1	
C728		ECUM1H220JCN	C.CAPACITOR CH 50V 22P	1	
C729		ECUM1H121JCN	C.CAPACITOR CH 50V 120P	1	
C730,31		ECUM1H103KBN	C.CAPACITOR CH 50V 0.01U	2	
C732		ECUM1H101JCN	C.CAPACITOR CH 50V 100P	1	
C733		ECEA1AU101	E.CAPACITOR 10V 100U	1	
C734		ECUM1H331JCN	C.CAPACITOR CH 50V 330P	1	
C735		ECEA1AU101	E.CAPACITOR 10V 100U	1	
C736		ECUM1H103KBN	C.CAPACITOR CH 50V 0.01U	1	
C737		ECUM1H101JCN	C.CAPACITOR CH 50V 100P	1	
C738		ECUM1H103KBN	C.CAPACITOR CH 50V 0.01U	1	
C744		ECUM1E104ZFN	C.CAPACITOR CH 25V 0.1U	1	
C745		ECUM1H103KBN	C.CAPACITOR CH 50V 0.01U	1	
C746		ECUM1E104ZFN	C.CAPACITOR CH 25V 0.1U	1	
C747		ECEA1AU101	E.CAPACITOR 10V 100U	1	
C749		ECUM1H561JCN	C.CAPACITOR CH 50V 560P	1	

Refer to the P.C.BOARDS LIST, page 6-1-1, before using this page.

Ref.No.		Part No.	Part Name & Description	Pcs	Remarks
C750		ECUM1H331JCN	C.CAPACITOR CH 50V 330P	1	
C751		ECUM1H221JCN	C.CAPACITOR CH 50V 220P	1	
C752		ECUM1H561JCN	C.CAPACITOR CH 50V 560P	1	
C753		ECUM1H270JCN	C.CAPACITOR CH 50V 27P	1	
C754		ECUM1H181JCN	C.CAPACITOR CH 50V 180P	1	
C755		ECUM1H270JCN	C.CAPACITOR CH 50V 27P	1	
C756		ECUM1H101JCN	C.CAPACITOR CH 50V 100P	1	
C757		ECUM1H270JCN	C.CAPACITOR CH 50V 27P	1	
C758		ECUM1H050DCN	C.CAPACITOR CH 50V 50P	1	
C759		ECUM1E104ZFN	C.CAPACITOR CH 25V 0.1U	1	
C760		ECUM1H100DCN	C.CAPACITOR CH 50V 10P	1	
C762		ECUM1H391JCN	C.CAPACITOR CH 50V 390P	1	
C764		ECUM1H560JCN	C.CAPACITOR CH 50V 56P	1	
C765,66		ECUM1H103KBN	C.CAPACITOR CH 50V 0.01U	2	
C767		ECEA1AU101	E.CAPACITOR 10V 100U	1	
C768,69		ECUM1H103KBN	C.CAPACITOR CH 50V 0.01U	2	
C770		ECUM1H220JCN	C.CAPACITOR CH 50V 22P	1	
C771		ECUM1H681JCN	C.CAPACITOR CH 50V 680P	1	
C772		ECUM1E104ZFN	C.CAPACITOR CH 25V 0.1U	1	
C773-75		ECUM1H103KBN	C.CAPACITOR CH 50V 0.01U	3	
C776		ECUM1E104ZFN	C.CAPACITOR CH 25V 0.1U	1	
C777		ECEA1AU101	E.CAPACITOR 10V 100U	1	
C778,79		ECUM1E104ZFN	C.CAPACITOR CH 25V 0.1U	2	
C780,81		ECUM1H390JCN	C.CAPACITOR CH 50V 39P	2	
C782		ECEA1AU471	E.CAPACITOR 10V 470U	1	
C783		ECUM1E104ZFN	C.CAPACITOR CH 25V 0.1U	1	
C784		ECUM1H221JCN	C.CAPACITOR CH 50V 220P	1	
C785		ECEA1AU101	E.CAPACITOR 10V 100U	1	
C786		ECUM1H121JCN	C.CAPACITOR CH 50V 120P	1	
C787		ECUM1H100DCN	C.CAPACITOR CH 50V 10P	1	
C788		ECUM1H331JCN	C.CAPACITOR CH 50V 330P	1	
C789,90		ECUM1E104ZFN	C.CAPACITOR CH 25V 0.1U	2	
C791		ECUM1H331JCN	C.CAPACITOR CH 50V 330P	1	
C792		ECUM1H220JCN	C.CAPACITOR CH 50V 22P	1	
C793		ECUM1H680JCN	C.CAPACITOR CH 50V 68P	1	
C794		ECUM1H330JCN	C.CAPACITOR CH 50V 33P	1	
C796		ECEA1CU100	E.CAPACITOR 16V 10U	1	
C797		VCM0023	M.CAPACITOR 379P	1	
C799		ECEA0JU221	E.CAPACITOR 6.3V 220U	1	
C800		ECUM1H050DCN	C.CAPACITOR CH 50V 50P	1	
C801		ECUM1H020CCN	C.CAPACITOR CH 50V 2P	1	
C802		ECUM1H330JCN	C.CAPACITOR CH 50V 33P	1	
C803,04		ECUM1E104ZFN	C.CAPACITOR CH 25V 0.1U	2	
C805		ECUM1H470JCN	C.CAPACITOR CH 50V 47P	1	
C808		ECEA1CU221	E.CAPACITOR 16V 220U	1	
C810		ECEA1CU221	E.CAPACITOR 16V 220U	1	
C811,12		ECUM1H103KBN	C.CAPACITOR CH 50V 0.01U	2	
C813,14		VCM0027	V.CAPACITOR	2	
C815		ECEA1AU101	E.CAPACITOR 10V 100U	1	
C816		ECUM1E104ZFN	C.CAPACITOR CH 25V 0.1U	1	
C817		ECEA1AU101	E.CAPACITOR 10V 100U	1	
C818		ECUM1H220JCN	C.CAPACITOR CH 50V 22P	1	
C819		ECEA1CU101	E.CAPACITOR 16V 100U	1	
C821		ECUM1E104ZFN	C.CAPACITOR CH 25V 0.1U	1	
C822		ECUM1H101JCN	C.CAPACITOR CH 50V 100P	1	
C823,24		ECUM1H103KBN	C.CAPACITOR CH 50V 0.01U	2	
C825		ECEA1AU101	E.CAPACITOR 10V 100U	1	
C826		ECUM1H680JCN	C.CAPACITOR CH 50V 68P	1	
C827		ECUM1H100DCN	C.CAPACITOR CH 50V 10P	1	
C828		ECUM1H221JCN	C.CAPACITOR CH 50V 220P	1	
C829		ECEA1AU101	E.CAPACITOR 10V 100U	1	
C830,31		ECEA1CU100	E.CAPACITOR 16V 10U	2	
C832,33		ECEA1AU101	E.CAPACITOR 10V 100U	2	
C834		ECUM1H470JCN	C.CAPACITOR CH 50V 47P	1	
C835		ECUM1H680JCN	C.CAPACITOR CH 50V 68P	1	
C836		ECCF1H330JC	C.CAPACITOR 50V 33P	1	
C837		ECCF1H060DC	C.CAPACITOR 50V 6P	1	
D301		MA151WK	DIODE	1	
D303-05		MA151K	DIODE	3	
D306,07		MA151WK	DIODE	2	
D308-10		MA151WA	DIODE	3	
D701		MA151WK	DIODE	1	

Ref.No.		Part No.	Part Name & Description	Pcs	Remarks
D702-05		MA151K	DIODE	4	
D706		MA151WK	DIODE	1	
D707		MA151WA	DIODE	1	
DL301		VLD0190	DELAY	1	
DL701		VLD0199	DELAY	1	
FL301		VLF0545	FILTER	1	
FL302		VLF0658	FILTER	1	
FL303		VLF0712	FILTER	1	
FL701		VLF0652	FILTER	1	
IC10		AN79N09	IC	1	
IC11,12		AN79M05F	IC	2	
IC13		AN78M05F	IC	1	
IC14		AN78N05	IC	1	
IC15		AN78N09	IC	1	
IC301		AN6308S	IC	1	
IC304		AN6308S	IC	1	
IC305		AN608P	IC	1	
IC306		NJM1496M	IC	1	
IC307		UPD4053BG	IC	1	
IC309		RC082BM	IC	1	
IC311-15		10116D	IC	5	
IC316		SN74LS123NS	IC	1	
IC317		MC74HC00AF	IC	1	
IC319		NE5539D	IC	1	
IC322		NJM592M8	IC	1	
IC323		MC74HC4053F	IC	1	
IC324		RC082BM	IC	1	
IC325		TC74HC221AF	IC	1	
IC326		RC082BM	IC	1	
IC701		AN6308S	IC	1	
IC705		NJM1496M	IC	1	
IC706		UPD4053BG	IC	1	
IC708-12		10116D	IC	5	
IC716		NE5539D	IC	1	
IC719		NJM592M8	IC	1	
IC720		MC74HC4053F	IC	1	
IC721		RC082BM	IC	1	
IC722		TC74HC221AF	IC	1	
L301		VLQEL05F101K	COIL 100UH	1	
L302,03		VLQEL05S100J	COIL 10UH	2	
L304		VLQEL05F101K	COIL 100UH	1	
L308		VLQEL05S3R3J	COIL 3.3UH	1	
L309,10		VLQEL05F101K	COIL 100UH	2	
L311		VLQEL05S330J	COIL 33UH	1	
L312		VLQEL05S2R7J	COIL 2.7UH	1	
L313		VLQEL05F101K	COIL 100UH	1	
L314		VLQEL05S8R2J	COIL 8.2UH	1	
L316-18		VLQEL05F101K	COIL 100UH	3	
L320,21		VLQEL05S2R2J	COIL 2.2UH	2	
L322		VLQEL05S180J	COIL 18UH	1	
L323		VLQEL05F101K	COIL 100UH	1	
L324		VLQEL05S1R0J	COIL 1UH	1	
L325-27		VLQEL05F101K	COIL 100UH	3	
L328		VLQEL05S6R8J	COIL 6.8UH	1	
L329		VLQEL05F101K	COIL 100UH	1	
L330		VLQEL05S3R3J	COIL 3.3UH	1	
L333		VLQEL05F101K	COIL 100UH	1	
L334		VLQEL05S6R8K	COIL 6.8UH	1	
L335		VLQEL05F101K	COIL 100UH	1	
L339		VLQEL05S6R8J	COIL 6.8UH	1	
L340,41		VLQEL05F101K	COIL 100UH	2	
L342		VLQEL05S820J	COIL 82UH	1	
L343,44		VLQEL05F101K	COIL 100UH	2	

Refer to the P.C.BOARDS LIST, page 6-1-1, before using this page.

Ref.No.		Part No.	Part Name & Description	Pcs	Remarks
L701		VLQEL05F101K	COIL 100UH	1	
L702		VLQEL05S150J	COIL 15UH	1	
L709		VLQEL05S4R7J	COIL 4.7UH	1	
L710		VLQEL05F101K	COIL 100UH	1	
L711		VLQEL05S560J	COIL 56UH	1	
L712		VLQEL05F101K	COIL 100UH	1	
L713		VLQEL05S3R9J	COIL 3.9UH	1	
L715		VLQEL05F101K	COIL 100UH	1	
L716		VLQEL05S181J	COIL 180UH	1	
L717		VLQEL05S680J	COIL 68UH	1	
L718		VLQEL05S2R2J	COIL 2.2UH	1	
L719,20		VLQEL05S6R8J	COIL 6.8UH	2	
L721		VLQEL05S4R7J	COIL 4.7UH	1	
L722		VLQEL05S2R7J	COIL 2.7UH	1	
L723		VLQEL05S270J	COIL 27UH	1	
L724		VLQEL05F101K	COIL 100UH	1	
L725		VLQEL05S1R5J	COIL 1.5UH	1	
L726-28		VLQEL05F101K	COIL 100UH	3	
L729		VLQEL05S150J	COIL 15UH	1	
L731		VLQEL05F101K	COIL 100UH	1	
L732		VLQEL05S6R8K	COIL 6.8UH	1	
L733		VLQEL05F101K	COIL 100UH	1	
L737		VLQEL05S220J	COIL 22UH	1	
L738		VLQEL05S390J	COIL 39UH	1	
L739-42		VLQEL05F101K	COIL 100UH	4	
Q301-04		2SC2295	TRANSISTOR CHIP	4	(B,C)
Q309,10		2SC2295	TRANSISTOR CHIP	2	(B,C)
Q311		2SA1022-C	TRANSISTOR CHIP	1	(B,C)
Q313,14		2SC2295	TRANSISTOR CHIP	2	(B,C)
Q315		2SA1022-C	TRANSISTOR CHIP	1	(B,C)
Q316		2SC2295	TRANSISTOR CHIP	1	(B,C)
Q317,18		2SA1022-C	TRANSISTOR CHIP	2	(B,C)
Q319		IMX4	TRANSISTOR	1	
Q320		UN2113	TRANSISTOR-RESISTOR	1	
Q321		2SC2295	TRANSISTOR CHIP	1	(B,C)
Q323		IMX4	TRANSISTOR	1	
Q324		2SC2295	TRANSISTOR CHIP	1	(B,C)
Q326		2SC2295	TRANSISTOR CHIP	1	(B,C)
Q327		2SA1022-C	TRANSISTOR CHIP	1	(B,C)
Q329-38		2SC2295	TRANSISTOR CHIP	10	(B,C)
Q339,40		UN2213	TRANSISTOR-RESISTOR	2	
Q341		2SA1462	TRANSISTOR	1	
Q342,43		2SC3757	TRANSISTOR	2	(Q,R)
Q344		2SC2295	TRANSISTOR CHIP	1	(B,C)
Q345		2SA1022-C	TRANSISTOR CHIP	1	(B,C)
Q346		2SC2480	TRANSISTOR	1	
Q347		2SA1462	TRANSISTOR	1	
Q348		2SC2480	TRANSISTOR	1	
Q349,50		2SA1226	TRANSISTOR	2	
Q351		2SK374	TRANSISTOR	1	
Q352		2SC3757	TRANSISTOR	1	(Q,R)
Q353		2SA1226	TRANSISTOR	1	
Q356-61		UN2113	TRANSISTOR-RESISTOR	6	
Q362,63		2SC2295	TRANSISTOR CHIP	2	(B,C)
Q364		2SA1022-C	TRANSISTOR CHIP	1	(B,C)
Q365,66		2SA1226	TRANSISTOR	2	
Q367		2SC3757	TRANSISTOR	1	(Q,R)
Q368,69		2SC2295	TRANSISTOR CHIP	2	(B,C)
Q370,71		UN2113	TRANSISTOR-RESISTOR	2	
Q372		2SC2295	TRANSISTOR CHIP	1	(B,C)
Q373-75		UN2213	TRANSISTOR-RESISTOR	3	
Q376		2SA1462	TRANSISTOR	1	
Q377		2SA1226	TRANSISTOR	1	
Q378		2SB709	TRANSISTOR CHIP	1	(Q,R)
Q379		2SC2480	TRANSISTOR	1	
Q380,81		2SC2295	TRANSISTOR CHIP	2	(B,C)
Q382-84		2SC3757	TRANSISTOR	3	(Q,R)
Q385,86		2SC2295	TRANSISTOR CHIP	2	(B,C)
Q387		2SA1022-C	TRANSISTOR CHIP	1	(B,C)
Q388		2SD601	TRANSISTOR CHIP	1	(Q,R)
Q389		2SB709	TRANSISTOR CHIP	1	(Q,R)
Q701,02		2SA1022-C	TRANSISTOR CHIP	2	(B,C)

Ref.No.		Part No.	Part Name & Description	Pcs	Remarks
Q710,11		2SC2295	TRANSISTOR CHIP	2	(B,C)
Q712		2SA1022-C	TRANSISTOR CHIP	1	(B,C)
Q713		2SC2295	TRANSISTOR CHIP	1	(B,C)
Q714,15		2SA1022-C	TRANSISTOR CHIP	2	(B,C)
Q716		2SC2295	TRANSISTOR CHIP	1	(B,C)
Q718		2SC2295	TRANSISTOR CHIP	1	(B,C)
Q719		2SA1022-C	TRANSISTOR CHIP	1	(B,C)
Q721-30		2SC2295	TRANSISTOR CHIP	10	(B,C)
Q731		UN2213	TRANSISTOR-RESISTOR	1	
Q732		2SA1462	TRANSISTOR	1	
Q733		2SC2295	TRANSISTOR CHIP	1	(B,C)
Q734		2SA1022-C	TRANSISTOR CHIP	1	(B,C)
Q735		2SC2480	TRANSISTOR	1	
Q736		2SA1462	TRANSISTOR	1	
Q737		2SC2480	TRANSISTOR	1	
Q738,39		2SA1226	TRANSISTOR	2	
Q740		2SK374	TRANSISTOR	1	
Q741		2SC3757	TRANSISTOR	1	(Q,R)
Q742		2SA1226	TRANSISTOR	1	
Q745,46		2SC2295	TRANSISTOR CHIP	2	(B,C)
Q747		2SA1022-C	TRANSISTOR CHIP	1	(B,C)
Q748,49		2SA1226	TRANSISTOR	2	
Q750		2SC3757	TRANSISTOR	1	(Q,R)
Q751		2SC2295	TRANSISTOR CHIP	1	(B,C)
Q753		2SC2295	TRANSISTOR CHIP	1	(B,C)
Q754		2SA1462	TRANSISTOR	1	
Q755		2SA1226	TRANSISTOR	1	
Q756		2SB709	TRANSISTOR CHIP	1	(Q,R)
Q757		2SC2480	TRANSISTOR	1	
Q758-60		2SC3757	TRANSISTOR	3	(Q,R)
Q761		2SC2295	TRANSISTOR CHIP	1	(B,C)
Q762		2SA1022-C	TRANSISTOR CHIP	1	(B,C)
Q763		2SD601	TRANSISTOR CHIP	1	(Q,R)
Q764		2SB709	TRANSISTOR CHIP	1	(Q,R)
			RESISTORS		
R20		ERJ6GEYJ472	M.RESISTOR CH 1/10W 4.7K	1	
R101		ERJ6GEYJ470	M.RESISTOR CH 1/10W 47	1	
R301		ERJ6GEYJ470	M.RESISTOR CH 1/10W 47	1	
R302		ERJ6GEYJ681	M.RESISTOR CH 1/10W 680	1	
R303		ERJ6GEYJ102	M.RESISTOR CH 1/10W 1K	1	
R304		ERJ6GEYJ332	M.RESISTOR CH 1/10W 3.3K	1	
R305		ERJ6GEYJ470	M.RESISTOR CH 1/10W 47	1	
R306		ERJ6GEYJ681	M.RESISTOR CH 1/10W 680	1	
R307		ERJ6GEYJ102	M.RESISTOR CH 1/10W 1K	1	
R308		ERJ6GEYJ332	M.RESISTOR CH 1/10W 3.3K	1	
R309		ERJ6GEYJ222	M.RESISTOR CH 1/10W 2.2K	1	
R310		ERJ6GEYJ470	M.RESISTOR CH 1/10W 47	1	
R322		ERJ6GEYJ470	M.RESISTOR CH 1/10W 47	1	
R323		ERJ6GEYJ152	M.RESISTOR CH 1/10W 1.5K	1	
R324		ERJ6GEYJ470	M.RESISTOR CH 1/10W 47	1	
R325,26		ERJ6GEYJ102	M.RESISTOR CH 1/10W 1K	2	
R327		ERJ6GEYJ103	M.RESISTOR CH 1/10W 10K	1	
R328		ERJ6GEYJ105	M.RESISTOR CH 1/10W 1M	1	
R329		ERJ6GEYJ224	M.RESISTOR CH 1/10W 220K	1	
R330		ERJ6GEYJ473	M.RESISTOR CH 1/10W 47K	1	
R331		ERJ6GEYJ223	M.RESISTOR CH 1/10W 22K	1	
R332		ERJ6GEYJ152	M.RESISTOR CH 1/10W 1.5K	1	
R333,34		ERJ6GEYG471	M.RESISTOR CH 1/10W 470	2	
R335,36		ERJ6GEYJ470	M.RESISTOR CH 1/10W 47	2	
R337,38		ERJ6GEYJ222	M.RESISTOR CH 1/10W 2.2K	2	
R339,40		ERJ6GEYJ271	M.RESISTOR CH 1/10W 270	2	
R341		ERJ6GEYJ470	M.RESISTOR CH 1/10W 47	1	
R342		ERJ6GEYJ271	M.RESISTOR CH 1/10W 270	1	
R343		ERJ6GEYJ821	M.RESISTOR CH 1/10W 820	1	
R344		ERJ6GEYJ470	M.RESISTOR CH 1/10W 47	1	
R345		ERJ6GEYJ222	M.RESISTOR CH 1/10W 2.2K	1	
R346		ERJ6GEYJ102	M.RESISTOR CH 1/10W 1K	1	
R347		ERJ6GEYG331	M.RESISTOR CH 1/10W 330	1	
R348		ERJ6GEYJ153	M.RESISTOR CH 1/10W 15K	1	
R349		ERJ6GEYJ223	M.RESISTOR CH 1/10W 22K	1	
R350,51		ERJ6GEYJ220	M.RESISTOR CH 1/10W 22	2	
R352		ERJ6GEYJ470	M.RESISTOR CH 1/10W 47	1	

Refer to the P.C.BOARDS LIST, page 6-1-1, before using this page.

Ref.No.		Part No.	Part Name & Description	Pcs	Remarks
R353		ERJ6GEYJ152	M.RESISTOR CH 1/10W 1.5K	1	
R354		ERJ6GEYJ471	M.RESISTOR CH 1/10W 470	1	
R355		ERJ6GEYJ102	M.RESISTOR CH 1/10W 1K	1	
R356		ERJ6GEYJ221	M.RESISTOR CH 1/10W 220	1	
R357		ERJ6GEYJ222	M.RESISTOR CH 1/10W 2.2K	1	
R358		ERJ6GEYJ101	M.RESISTOR CH 1/10W 100	1	
R359		ERJ6GEYJ472	M.RESISTOR CH 1/10W 4.7K	1	
R360,61		ERJ6GEYJ473	M.RESISTOR CH 1/10W 47K	2	
R362		ERJ6GEYJ472	M.RESISTOR CH 1/10W 4.7K	1	
R363		ERJ6GEYJ223	M.RESISTOR CH 1/10W 22K	1	
R364		ERJ6GEYJ273	M.RESISTOR CH 1/10W 27K	1	
R365		ERJ6GEYJ473	M.RESISTOR CH 1/10W 47K	1	
R366		ERJ6GEYJ223	M.RESISTOR CH 1/10W 22K	1	
R367		ERJ6GEYJ104	M.RESISTOR CH 1/10W 100K	1	
R368		ERJ6GEYJ472	M.RESISTOR CH 1/10W 4.7K	1	
R369		ERJ6GEYJ103	M.RESISTOR CH 1/10W 10K	1	
R370		ERJ6GEYJ223	M.RESISTOR CH 1/10W 22K	1	
R371		ERJ6GEYJ682	M.RESISTOR CH 1/10W 6.8K	1	
R372		ERJ6GEYJ470	M.RESISTOR CH 1/10W 47	1	
R373		ERJ6GEYJ681	M.RESISTOR CH 1/10W 680	1	
R374		ERJ6GEYJ151	M.RESISTOR CH 1/10W 150	1	
R375		ERJ6GEYJ470	M.RESISTOR CH 1/10W 47	1	
R386		ERJ6GEYJ103	M.RESISTOR CH 1/10W 10K	1	
R387,88		ERJ6GEYJ473	M.RESISTOR CH 1/10W 47K	2	
R389		ERJ6GEYJ103	M.RESISTOR CH 1/10W 10K	1	
R390		ERJ6GEYJ472	M.RESISTOR CH 1/10W 4.7K	1	
R391		ERJ6GEYJ474	M.RESISTOR CH 1/10W 470K	1	
R392		ERJ6GEYJ473	M.RESISTOR CH 1/10W 47K	1	
R393		ERJ6GEYJ471	M.RESISTOR CH 1/10W 470	1	
R397		ERJ6GEYJ470	M.RESISTOR CH 1/10W 47	1	
R398		ERJ6GEYJ152	M.RESISTOR CH 1/10W 1.5K	1	
R399,00		ERJ6GEYG301	M.RESISTOR CH 1/10W 300	2	
R401		ERJ6GEYJ470	M.RESISTOR CH 1/10W 47	1	
R402		ERJ6GEYJ102	M.RESISTOR CH 1/10W 1K	1	
R403		ERJ6GEYJ681	M.RESISTOR CH 1/10W 680	1	
R404		ERJ6GEYJ102	M.RESISTOR CH 1/10W 1K	1	
R405		ERJ6GEYJ152	M.RESISTOR CH 1/10W 1.5K	1	
R406		ERJ6GEYJ470	M.RESISTOR CH 1/10W 47	1	
R407		ERJ6GEYJ221	M.RESISTOR CH 1/10W 220	1	
R408		ERJ6GEYJ222	M.RESISTOR CH 1/10W 2.2K	1	
R409		ERJ6GEYJ470	M.RESISTOR CH 1/10W 47	1	
R410		ERJ6GEYJ152	M.RESISTOR CH 1/10W 1.5K	1	
R411,12		ERJ6GEYJ331	M.RESISTOR CH 1/10W 330	2	
R413		ERJ6GEYJ470	M.RESISTOR CH 1/10W 47	1	
R414		ERJ6GEYJ222	M.RESISTOR CH 1/10W 2.2K	1	
R415		ERJ6GEYJ470	M.RESISTOR CH 1/10W 47	1	
R426		ERJ6GEYJ470	M.RESISTOR CH 1/10W 47	1	
R427-34		ERJ6GEYJ102	M.RESISTOR CH 1/10W 1K	8	
R435,36		ERJ6GEYJ332	M.RESISTOR CH 1/10W 3.3K	2	
R437		ERJ6GEYJ101	M.RESISTOR CH 1/10W 100	1	
R438,39		ERJ6GEYJ471	M.RESISTOR CH 1/10W 470	2	
R440		ERJ6GEYJ470	M.RESISTOR CH 1/10W 47	1	
R441,42		ERJ6GEYJ681	M.RESISTOR CH 1/10W 680	2	
R443,44		ERJ6GEYJ101	M.RESISTOR CH 1/10W 100	2	
R445		ERJ6GEYJ470	M.RESISTOR CH 1/10W 47	1	
R446		ERJ6GEYJ151	M.RESISTOR CH 1/10W 150	1	
R447,48		ERJ6GEYJ222	M.RESISTOR CH 1/10W 2.2K	2	
R449		ERJ6GEYJ470	M.RESISTOR CH 1/10W 47	1	
R450,51		ERJ6GEYJ222	M.RESISTOR CH 1/10W 2.2K	2	
R452,53		ERJ6GEYJ470	M.RESISTOR CH 1/10W 47	2	
R454-65		ERJ6GEYJ102	M.RESISTOR CH 1/10W 1K	12	
R466		ERJ6GEYJ683	M.RESISTOR CH 1/10W 68K	1	
R467,68		ERJ6GEYJ103	M.RESISTOR CH 1/10W 10K	2	
R469,70		ERJ6GEYJ150	M.RESISTOR CH 1/10W 15	2	
R471,72		ERJ6GEYJ332	M.RESISTOR CH 1/10W 3.3K	2	
R473		ERJ6GEYJ101	M.RESISTOR CH 1/10W 100	1	
R474		ERDS2TJ222	C.RESISTOR 1/4W 2.2K	1	
R475		ERJ6GEYJ102	M.RESISTOR CH 1/10W 1K	1	
R477		ERJ6GEYJ471	M.RESISTOR CH 1/10W 470	1	
R478		ERJ6GEYJ102	M.RESISTOR CH 1/10W 1K	1	
R479		ERJ6GEYJ222	M.RESISTOR CH 1/10W 2.2K	1	
R480,81		ERJ6GEYJ471	M.RESISTOR CH 1/10W 470	2	
R482		ERJ6GEYJ470	M.RESISTOR CH 1/10W 47	1	
R483,84		ERJ6GEYJ333	M.RESISTOR CH 1/10W 33K	2	
R485,86		ERJ6GEYJ102	M.RESISTOR CH 1/10W 1K	2	

Ref.No.		Part No.	Part Name & Description	Pcs	Remarks
R487		ERJ6GEYJ222	M.RESISTOR CH 1/10W 2.2K	1	
R488		ERJ6GEYJ221	M.RESISTOR CH 1/10W 220	1	
R489		ERJ6GEYJ392	M.RESISTOR CH 1/10W 3.9K	1	
R490		ERJ6GEYJ470	M.RESISTOR CH 1/10W 47	1	
R491		ERJ6GEYJ333	M.RESISTOR CH 1/10W 33K	1	
R492		ERJ6GEYJ471	M.RESISTOR CH 1/10W 470	1	
R493		ERJ6GEYJ152	M.RESISTOR CH 1/10W 1.5K	1	
R494,95		ERJ6GEYJ101	M.RESISTOR CH 1/10W 100	2	
R496		ERJ6GEYJ222	M.RESISTOR CH 1/10W 2.2K	1	
R497		ERJ6GEYJ102	M.RESISTOR CH 1/10W 1K	1	
R498		ERJ6GEYJ101	M.RESISTOR CH 1/10W 100	1	
R499		ERJ6GEYJ332	M.RESISTOR CH 1/10W 3.3K	1	
R500		ERJ6GEYJ223	M.RESISTOR CH 1/10W 22K	1	
R501		ERJ6GEYJ332	M.RESISTOR CH 1/10W 3.3K	1	
R502		ERJ6GEYJ472	M.RESISTOR CH 1/10W 4.7K	1	
R503		ERJ6GEYJ103	M.RESISTOR CH 1/10W 10K	1	
R504		ERJ6GEYJ683	M.RESISTOR CH 1/10W 68K	1	
R505,06		ERJ6GEYJ473	M.RESISTOR CH 1/10W 47K	2	
R508		ERJ6GEYJ471	M.RESISTOR CH 1/10W 470	1	
R509		ERJ6GEYJ221	M.RESISTOR CH 1/10W 220	1	
R510		ERJ6GEYJ392	M.RESISTOR CH 1/10W 3.9K	1	
R511		VREO034E27B	M.RESISTOR CH 1/10W 1.87K	1	
R512		VREO034E751	M.RESISTOR CH 1/10W 750	1	
R513		ERJ6GEYJ332	M.RESISTOR CH 1/10W 3.3K	1	
R514		ERJ6GEYJ152	M.RESISTOR CH 1/10W 1.5K	1	
R515		ERJ6GEYJ682	M.RESISTOR CH 1/10W 6.8K	1	
R516		ERJ6GEYG301	M.RESISTOR CH 1/10W 300	1	
R518		ERJ6GEYG471	M.RESISTOR CH 1/10W 470	1	
R519		ERJ6GEYJ332	M.RESISTOR CH 1/10W 3.3K	1	
R520		ERJ6GEYJ101	M.RESISTOR CH 1/10W 100	1	
R521		ERJ6GEYJ151	M.RESISTOR CH 1/10W 150	1	
R522		VREO034E26A	M.RESISTOR CH 1/10W 182	1	
R523		ERJ6GEYJ331	M.RESISTOR CH 1/10W 330	1	
R524		VREO034E89A	M.RESISTOR CH 1/10W 825	1	
R525		ERJ6GEYG331	M.RESISTOR CH 1/10W 330	1	
R526,27		ERJ6GEYJ470	M.RESISTOR CH 1/10W 47	2	
R528		ERJ6GEYJ101	M.RESISTOR CH 1/10W 100	1	
R529		ERJ6GEYJ102	M.RESISTOR CH 1/10W 1K	1	
R530		ERJ6GEYJ681	M.RESISTOR CH 1/10W 680	1	
R531,32		ERJ6GEYJ273	M.RESISTOR CH 1/10W 27K	2	
R533,34		ERJ6GEYJ183	M.RESISTOR CH 1/10W 18K	2	
R535,36		ERJ6GEYJ221	M.RESISTOR CH 1/10W 220	2	
R537		ERJ6GEYG223	M.RESISTOR CH 1/10W 22K	1	
R538		ERJ6GEYJ470	M.RESISTOR CH 1/10W 47	1	
R539		ERJ6GEYG331	M.RESISTOR CH 1/10W 330	1	
R540		VREO034E26A	M.RESISTOR CH 1/10W 182	1	
R541		VREO034E89A	M.RESISTOR CH 1/10W 825	1	
R542		VREO034E59A	M.RESISTOR CH 1/10W 413	1	
R543		VREO034E102	M.RESISTOR CH 1/10W 1K	1	
R544		ERJ6GEYJ392	M.RESISTOR CH 1/10W 3.9K	1	
R545		ERJ6GEYJ222	M.RESISTOR CH 1/10W 2.2K	1	
R546		ERJ6GEYJ470	M.RESISTOR CH 1/10W 47	1	
R547		ERJ6GEYJ222	M.RESISTOR CH 1/10W 2.2K	1	
R548		ERJ6GEYJ470	M.RESISTOR CH 1/10W 47	1	
R550		ERJ6GEYJ472	M.RESISTOR CH 1/10W 4.7K	1	
R551		ERJ6GEYJ473	M.RESISTOR CH 1/10W 47K	1	
R552		ERJ6GEYJ332	M.RESISTOR CH 1/10W 3.3K	1	
R553		ERJ6GEYJ471	M.RESISTOR CH 1/10W 470	1	
R554		ERJ6GEYJ102	M.RESISTOR CH 1/10W 1K	1	
R555		ERJ6GEYJ472	M.RESISTOR CH 1/10W 4.7K	1	
R556		ERJ6GEYJ222	M.RESISTOR CH 1/10W 2.2K	1	
R561-63		ERJ6GEYJ473	M.RESISTOR CH 1/10W 47K	3	
R564		ERJ6GEYJ222	M.RESISTOR CH 1/10W 2.2K	1	
R565		ERJ6GEYJ223	M.RESISTOR CH 1/10W 22K	1	
R566		ERJ6GEYJ222	M.RESISTOR CH 1/10W 2.2K	1	
R567		ERJ6GEYJ223	M.RESISTOR CH 1/10W 22K	1	
R568		ERJ6GEYJ331	M.RESISTOR CH 1/10W 330	1	
R569,70		ERJ6GEYJ470	M.RESISTOR CH 1/10W 47	2	
R571		ERJ6GEYJ152	M.RESISTOR CH 1/10W 1.5K	1	
R572		ERJ6GEYJ222	M.RESISTOR CH 1/10W 2.2K	1	
R573,74		ERJ6GEYJ470	M.RESISTOR CH 1/10W 47	2	
R575,76		ERJ6GEYJ222	M.RESISTOR CH 1/10W 2.2K	2	
R577		ERJ6GEYJ471	M.RESISTOR CH 1/10W 470	1	
R578		ERJ6GEYJ470	M.RESISTOR CH 1/10W 47	1	
R579		ERJ6GEYJ152	M.RESISTOR CH 1/10W 1.5K	1	

Refer to the P.C.BOARDS LIST, page 6-1-1, before using this page.

Ref.No.		Part No.	Part Name & Description	Pcs	Remarks
R580		ERJ6GEYJ221	M.RESISTOR CH 1/10W 220	1	
R581		ERJ6GEYJ222	M.RESISTOR CH 1/10W 2.2K	1	
R582		ERJ6GEYJ682	M.RESISTOR CH 1/10W 6.8K	1	
R583		ERJ6GEYJ182	M.RESISTOR CH 1/10W 1.8K	1	
R584		ERJ6GEYJ471	M.RESISTOR CH 1/10W 470	1	
R585		ERJ6GEYJ332	M.RESISTOR CH 1/10W 3.3K	1	
R586		ERJ6GEYJ222	M.RESISTOR CH 1/10W 2.2K	1	
R587,88		ERJ6GEYJ224	M.RESISTOR CH 1/10W 220K	2	
R589		ERJ6GEYJ103	M.RESISTOR CH 1/10W 10K	1	
R590		ERJ6GEYJ332	M.RESISTOR CH 1/10W 3.3K	1	
R591		ERJ6GEYJ471	M.RESISTOR CH 1/10W 470	1	
R592		ERJ6GEYJ332	M.RESISTOR CH 1/10W 3.3K	1	
R593		ERJ6GEYJ273	M.RESISTOR CH 1/10W 27K	1	
R594		ERJ6GEYJ562	M.RESISTOR CH 1/10W 5.6K	1	
R595,96		ERJ6GEYK475	M.RESISTOR CH 1/10W 4.7M	2	
R597		ERJ6GEYJ272	M.RESISTOR CH 1/10W 2.7K	1	
R598		ERJ6GEYJ471	M.RESISTOR CH 1/10W 470	1	
R599		ERJ6GEYJ102	M.RESISTOR CH 1/10W 1K	1	
R600		ERJ6GEYJ472	M.RESISTOR CH 1/10W 4.7K	1	
R601		ERJ6GEYJ102	M.RESISTOR CH 1/10W 1K	1	
R602		ERJ6GEYJ472	M.RESISTOR CH 1/10W 4.7K	1	
R603,04		ERJ6GEYJ474	M.RESISTOR CH 1/10W 470K	2	
R605,06		ERJ6GEYK475	M.RESISTOR CH 1/10W 4.7M	2	
R607		ERJ6GEYJ223	M.RESISTOR CH 1/10W 22K	1	
R608,09		ERJ6GEYJ472	M.RESISTOR CH 1/10W 4.7K	2	
R610		ERJ6GEYJ104	M.RESISTOR CH 1/10W 100K	1	
R611		ERJ6GEYJ472	M.RESISTOR CH 1/10W 4.7K	1	
R612		ERJ6GEYJ471	M.RESISTOR CH 1/10W 470	1	
R613		ERJ6GEYJ223	M.RESISTOR CH 1/10W 22K	1	
R614		ERJ6GEYJ224	M.RESISTOR CH 1/10W 220K	1	
R615		ERJ6GEYJ103	M.RESISTOR CH 1/10W 10K	1	
R616		ERJ6GEYJ104	M.RESISTOR CH 1/10W 100K	1	
R617-19		ERJ6GEYJ103	M.RESISTOR CH 1/10W 10K	3	
R620		ERJ6GEYJ101	M.RESISTOR CH 1/10W 100	1	
R621,22		ERJ6GEYJ474	M.RESISTOR CH 1/10W 470K	2	
R623		ERJ6GEYJ153	M.RESISTOR CH 1/10W 15K	1	
R624-26		ERJ6GEYJ103	M.RESISTOR CH 1/10W 10K	3	
R627		ERJ6GEYJ472	M.RESISTOR CH 1/10W 4.7K	1	
R628		ERJ6GEYJ223	M.RESISTOR CH 1/10W 22K	1	
R629		ERJ6GEYJ472	M.RESISTOR CH 1/10W 4.7K	1	
R630,31		ERJ6GEYJ101	M.RESISTOR CH 1/10W 100	2	
R632		ERJ6GEYJ102	M.RESISTOR CH 1/10W 1K	1	
R633		ERDS2TJ331	C.RESISTOR 1/4W 330	1	
R635,36		ERJ6GEYJ470	M.RESISTOR CH 1/10W 47	2	
R637		ERJ6GEYJ102	M.RESISTOR CH 1/10W 1K	1	
R638		ERJ6GEY0R00	M.RESISTOR CH 1/10W 0	1	
R639,40		ERJ6GEYJ331	M.RESISTOR CH 1/10W 330	2	
R643		ERJ6GEYJ331	M.RESISTOR CH 1/10W 330	1	
R644,45		ERJ6GEYJ470	M.RESISTOR CH 1/10W 47	2	
R646		ERJ6GEYJ682	M.RESISTOR CH 1/10W 6.8K	1	
R647,48		ERJ6GEYJ221	M.RESISTOR CH 1/10W 220	2	
R649		ERJ6GEYJ682	M.RESISTOR CH 1/10W 6.8K	1	
R650-53		ERJ6GEYJ101	M.RESISTOR CH 1/10W 100	4	
R654,55		ERJ6GEYJ681	M.RESISTOR CH 1/10W 680	2	
R656		ERJ6GEYJ470	M.RESISTOR CH 1/10W 47	1	
R657		ERJ6GEY0R00	M.RESISTOR CH 1/10W 0	1	
R660		ERDS2TJ331	C.RESISTOR 1/4W 330	1	
R661		ERDS2TJ472	C.RESISTOR 1/4W 4.7K	1	
R701		ERJ6GEYJ470	M.RESISTOR CH 1/10W 47	1	
R702		ERJ6GEYJ102	M.RESISTOR CH 1/10W 1K	1	
R703		ERJ6GEYJ821	M.RESISTOR CH 1/10W 820	1	
R704		ERJ6GEY0R00	M.RESISTOR CH 1/10W 0	1	
R705		ERJ6GEYJ332	M.RESISTOR CH 1/10W 3.3K	1	
R711,12		ERJ6GEYJ470	M.RESISTOR CH 1/10W 47	2	
R723,24		ERJ6GEYJ101	M.RESISTOR CH 1/10W 100	2	
R725		ERJ6GEYJ102	M.RESISTOR CH 1/10W 1K	1	
R726		ERJ6GEYJ470	M.RESISTOR CH 1/10W 47	1	
R727		ERJ6GEYG471	M.RESISTOR CH 1/10W 470	1	
R728,29		ERJ6GEYJ470	M.RESISTOR CH 1/10W 47	2	
R730		ERJ6GEYG471	M.RESISTOR CH 1/10W 470	1	
R731		ERJ6GEYJ222	M.RESISTOR CH 1/10W 2.2K	1	
R732,33		ERJ6GEYG821	M.RESISTOR CH 1/10W 820	2	
R734		ERJ6GEYJ222	M.RESISTOR CH 1/10W 2.2K	1	
R735		ERJ6GEYJ470	M.RESISTOR CH 1/10W 47	1	
R736		ERJ6GEYJ271	M.RESISTOR CH 1/10W 270	1	

Ref.No.		Part No.	Part Name & Description	Pcs	Remarks
R737		ERJ6GEYJ332	M.RESISTOR CH 1/10W 3.3K	1	
R738		ERJ6GEYJ821	M.RESISTOR CH 1/10W 820	1	
R739		ERJ6GEYJ470	M.RESISTOR CH 1/10W 47	1	
R740		ERJ6GEYJ222	M.RESISTOR CH 1/10W 2.2K	1	
R741		ERJ6GEYJ272	M.RESISTOR CH 1/10W 2.7K	1	
R742		ERJ6GEYG331	M.RESISTOR CH 1/10W 330	1	
R743		ERJ6GEYJ153	M.RESISTOR CH 1/10W 15K	1	
R744		ERJ6GEYJ473	M.RESISTOR CH 1/10W 47K	1	
R745,46		ERJ6GEYJ220	M.RESISTOR CH 1/10W 22	2	
R747		ERJ6GEYJ470	M.RESISTOR CH 1/10W 47	1	
R748		ERJ6GEYJ152	M.RESISTOR CH 1/10W 1.5K	1	
R749		ERJ6GEYJ331	M.RESISTOR CH 1/10W 330	1	
R750		ERJ6GEYJ102	M.RESISTOR CH 1/10W 1K	1	
R751		ERJ6GEYJ221	M.RESISTOR CH 1/10W 220	1	
R752		ERJ6GEYJ222	M.RESISTOR CH 1/10W 2.2K	1	
R753		ERJ6GEYJ472	M.RESISTOR CH 1/10W 4.7K	1	
R754		ERJ6GEYJ103	M.RESISTOR CH 1/10W 10K	1	
R755		ERJ6GEYJ472	M.RESISTOR CH 1/10W 4.7K	1	
R756		ERJ6GEYJ682	M.RESISTOR CH 1/10W 6.8K	1	
R760		ERJ6GEYJ470	M.RESISTOR CH 1/10W 47	1	
R761		ERJ6GEYJ152	M.RESISTOR CH 1/10W 1.5K	1	
R762,63		ERJ6GEYG301	M.RESISTOR CH 1/10W 300	2	
R764		ERJ6GEYJ470	M.RESISTOR CH 1/10W 47	1	
R765		ERJ6GEYJ102	M.RESISTOR CH 1/10W 1K	1	
R766		ERJ6GEYJ681	M.RESISTOR CH 1/10W 680	1	
R767		ERJ6GEYJ102	M.RESISTOR CH 1/10W 1K	1	
R768		ERJ6GEYJ152	M.RESISTOR CH 1/10W 1.5K	1	
R769		ERJ6GEYJ470	M.RESISTOR CH 1/10W 47	1	
R770		ERJ6GEYJ221	M.RESISTOR CH 1/10W 220	1	
R771		ERJ6GEYJ222	M.RESISTOR CH 1/10W 2.2K	1	
R772		ERJ6GEYJ470	M.RESISTOR CH 1/10W 47	1	
R773		ERJ6GEYJ152	M.RESISTOR CH 1/10W 1.5K	1	
R774,75		ERJ6GEYJ331	M.RESISTOR CH 1/10W 330	2	
R776		ERJ6GEYJ470	M.RESISTOR CH 1/10W 47	1	
R777		ERJ6GEYJ222	M.RESISTOR CH 1/10W 2.2K	1	
R778		ERJ6GEYJ470	M.RESISTOR CH 1/10W 47	1	
R789		ERJ6GEYJ470	M.RESISTOR CH 1/10W 47	1	
R790-97		ERJ6GEYJ102	M.RESISTOR CH 1/10W 1K	8	
R798,99		ERJ6GEYJ332	M.RESISTOR CH 1/10W 3.3K	2	
R800		ERJ6GEYJ101	M.RESISTOR CH 1/10W 100	1	
R801,02		ERJ6GEYJ471	M.RESISTOR CH 1/10W 470	2	
R803		ERJ6GEYJ470	M.RESISTOR CH 1/10W 47	1	
R804,05		ERJ6GEYJ681	M.RESISTOR CH 1/10W 680	2	
R806,07		ERJ6GEYJ101	M.RESISTOR CH 1/10W 100	2	
R808		ERJ6GEYJ470	M.RESISTOR CH 1/10W 47	1	
R809		ERJ6GEYJ151	M.RESISTOR CH 1/10W 150	1	
R810,11		ERJ6GEYJ222	M.RESISTOR CH 1/10W 2.2K	2	
R812		ERJ6GEYJ470	M.RESISTOR CH 1/10W 47	1	
R813,14		ERJ6GEYJ222	M.RESISTOR CH 1/10W 2.2K	2	
R815,16		ERJ6GEYJ470	M.RESISTOR CH 1/10W 47	2	
R817-28		ERJ6GEYJ102	M.RESISTOR CH 1/10W 1K	12	
R829		ERJ6GEYJ683	M.RESISTOR CH 1/10W 68K	1	
R830,31		ERJ6GEYJ103	M.RESISTOR CH 1/10W 10K	2	
R832,33		ERJ6GEYJ150	M.RESISTOR CH 1/10W 15	2	
R834,35		ERJ6GEYJ332	M.RESISTOR CH 1/10W 3.3K	2	
R836		ERJ6GEYJ101	M.RESISTOR CH 1/10W 100	1	
R837		ERDS2TJ222	C.RESISTOR 1/4W 2.2K	1	
R838-40		ERJ6GEYJ102	M.RESISTOR CH 1/10W 1K	3	
R842		ERJ6GEYJ222	M.RESISTOR CH 1/10W 2.2K	1	
R843,44		ERJ6GEYJ471	M.RESISTOR CH 1/10W 470	2	
R845		ERJ6GEYJ470	M.RESISTOR CH 1/10W 47	1	
R846,47		ERJ6GEYJ333	M.RESISTOR CH 1/10W 33K	2	
R848,49		ERJ6GEYJ102	M.RESISTOR CH 1/10W 1K	2	
R850		ERJ6GEYJ222	M.RESISTOR CH 1/10W 2.2K	1	
R851		ERJ6GEYJ221	M.RESISTOR CH 1/10W 220	1	
R852		ERJ6GEYJ392	M.RESISTOR CH 1/10W 3.9K	1	
R853		ERJ6GEYJ470	M.RESISTOR CH 1/10W 47	1	
R854		ERJ6GEYJ471	M.RESISTOR CH 1/10W 470	1	
R855		ERJ6GEYJ152	M.RESISTOR CH 1/10W 1.5K	1	
R856,57		ERJ6GEYJ101	M.RESISTOR CH 1/10W 100	2	
R858		ERJ6GEYJ222	M.RESISTOR CH 1/10W 2.2K	1	
R859		ERJ6GEYJ102	M.RESISTOR CH 1/10W 1K	1	
R860		ERJ6GEYJ101	M.RESISTOR CH 1/10W 100	1	
R861		ERJ6GEYJ332	M.RESISTOR CH 1/10W 3.3K	1	
R862		ERJ6GEYJ223	M.RESISTOR CH 1/10W 22K	1	

Refer to the P.C.BOARDS LIST, page 6-1-1, before using this page.

Ref.No.	Part No.	Part Name & Description	Pcs	Remarks
R863	ERJ6GEYJ332	M.RESISTOR CH 1/10W 3.3K	1	
R864	ERJ6GEYJ472	M.RESISTOR CH 1/10W 4.7K	1	
R865	ERJ6GEYJ103	M.RESISTOR CH 1/10W 10K	1	
R866	ERJ6GEYJ683	M.RESISTOR CH 1/10W 68K	1	
R867	ERJ6GEYJ473	M.RESISTOR CH 1/10W 47K	1	
R868	ERJ6GEYJ471	M.RESISTOR CH 1/10W 470	1	
R870	ERJ6GEYJ471	M.RESISTOR CH 1/10W 470	1	
R871	ERJ6GEYJ221	M.RESISTOR CH 1/10W 220	1	
R872	ERJ6GEYJ392	M.RESISTOR CH 1/10W 3.9K	1	
R873	VRE0034E27B	M.RESISTOR CH 1/10W 1.87K	1	
R874	VRE0034E751	M.RESISTOR CH 1/10W 750	1	
R875	ERJ6GEYJ332	M.RESISTOR CH 1/10W 3.3K	1	
R876	ERJ6GEYJ152	M.RESISTOR CH 1/10W 1.5K	1	
R878	ERJ6GEYG301	M.RESISTOR CH 1/10W 300	1	
R879	ERJ6GEYG471	M.RESISTOR CH 1/10W 470	1	
R880	ERJ6GEYJ332	M.RESISTOR CH 1/10W 3.3K	1	
R881	ERJ6GEYJ101	M.RESISTOR CH 1/10W 100	1	
R882	ERJ6GEYJ151	M.RESISTOR CH 1/10W 150	1	
R883	VRE0034E26A	M.RESISTOR CH 1/10W 182	1	
R884	ERJ6GEYJ331	M.RESISTOR CH 1/10W 330	1	
R885	VRE0034E89A	M.RESISTOR CH 1/10W 825	1	
R886,87	ERJ6GEYJ470	M.RESISTOR CH 1/10W 47	2	
R888	ERJ6GEYJ331	M.RESISTOR CH 1/10W 330	1	
R888	ERJ6GEYJ331	M.RESISTOR CH 1/10W 330	1	
R889	ERJ6GEYJ681	M.RESISTOR CH 1/10W 680	1	
R890	ERJ6GEYJ273	M.RESISTOR CH 1/10W 27K	1	
R891	ERJ6GEYJ183	M.RESISTOR CH 1/10W 18K	1	
R892	ERJ6GEYJ221	M.RESISTOR CH 1/10W 220	1	
R893	ERJ6GEYJ273	M.RESISTOR CH 1/10W 27K	1	
R894	ERJ6GEYJ183	M.RESISTOR CH 1/10W 18K	1	
R895	ERJ6GEYJ221	M.RESISTOR CH 1/10W 220	1	
R896	ERJ6GEYG223	M.RESISTOR CH 1/10W 22K	1	
R897	ERJ6GEYJ470	M.RESISTOR CH 1/10W 47	1	
R898	VRE0034E26A	M.RESISTOR CH 1/10W 182	1	
R899	VRE0034E89A	M.RESISTOR CH 1/10W 825	1	
R900	ERJ6GEYG331	M.RESISTOR CH 1/10W 330	1	
R901	VRE0034E59A	M.RESISTOR CH 1/10W 413	1	
R902	VRE0034E102	M.RESISTOR CH 1/10W 1K	1	
R903	ERJ6GEYJ392	M.RESISTOR CH 1/10W 3.9K	1	
R904	ERJ6GEYJ470	M.RESISTOR CH 1/10W 47	1	
R905,06	ERJ6GEYJ222	M.RESISTOR CH 1/10W 2.2K	2	
R907	ERJ6GEYJ470	M.RESISTOR CH 1/10W 47	1	
R909	ERJ6GEYJ472	M.RESISTOR CH 1/10W 4.7K	1	
R910	ERJ6GEYJ473	M.RESISTOR CH 1/10W 47K	1	
R911	ERJ6GEYJ332	M.RESISTOR CH 1/10W 3.3K	1	
R912	ERJ6GEYJ471	M.RESISTOR CH 1/10W 470	1	
R913	ERJ6GEYJ102	M.RESISTOR CH 1/10W 1K	1	
R914	ERJ6GEYJ472	M.RESISTOR CH 1/10W 4.7K	1	
R915	ERJ6GEYJ222	M.RESISTOR CH 1/10W 2.2K	1	
R920	ERJ6GEYJ331	M.RESISTOR CH 1/10W 330	1	
R921,22	ERJ6GEYJ470	M.RESISTOR CH 1/10W 47	2	
R923	ERJ6GEYJ152	M.RESISTOR CH1/10W 1.5K	1	
R924	ERJ6GEYJ222	M.RESISTOR CH 1/10W 2.2K	1	
R925,26	ERJ6GEYJ470	M.RESISTOR CH 1/10W 47	2	
R927,28	ERJ6GEYJ222	M.RESISTOR CH 1/10W 2.2K	2	
R929	ERJ6GEYJ471	M.RESISTOR CH 1/10W 470	1	
R930	ERJ6GEYJ470	M.RESISTOR CH 1/10W 47	1	
R931	ERJ6GEYJ152	M.RESISTOR CH 1/10W 1.5K	1	
R932	ERJ6GEYJ221	M.RESISTOR CH 1/10W 220	1	
R933	ERJ6GEYJ222	M.RESISTOR CH 1/10W 2.2K	1	
R934	ERJ6GEYJ682	M.RESISTOR CH 1/10W 6.8K	1	
R935	ERJ6GEYJ182	M.RESISTOR CH 1/10W 1.8K	1	
R936	ERJ6GEYJ471	M.RESISTOR CH 1/10W 470	1	
R937,38	ERJ6GEYJ332	M.RESISTOR CH 1/10W 3.3K	2	
R939	ERJ6GEYJ471	M.RESISTOR CH 1/10W 470	1	
R940	ERJ6GEYJ103	M.RESISTOR CH 1/10W 10K	1	
R941	ERJ6GEYJ683	M.RESISTOR CH 1/10W 68K	1	
R942	ERJ6GEYJ222	M.RESISTOR CH 1/10W 2.2K	1	
R943	ERJ6GEYJ273	M.RESISTOR CH 1/10W 27K	1	
R944	ERJ6GEYJ682	M.RESISTOR CH 1/10W 6.8K	1	
R945,46	ERJ6GEYK475	M.RESISTOR CH 1/10W 4.7M	2	
R947	ERJ6GEYJ272	M.RESISTOR CH 1/10W 2.7K	1	
R948	ERJ6GEYJ471	M.RESISTOR CH 1/10W 470	1	
R949	ERJ6GEYJ102	M.RESISTOR CH 1/10W 1K	1	
R950	ERJ6GEYJ472	M.RESISTOR CH 1/10W 4.7K	1	

Ref.No.	Part No.	Part Name & Description	Pcs	Remarks
R951	ERJ6GEYJ102	M.RESISTOR CH 1/10W 1K	1	
R952	ERJ6GEYJ472	M.RESISTOR CH 1/10W 4.7K	1	
R953,54	ERJ6GEYJ105	M.RESISTOR CH 1/10W 1M	2	
R955,56	ERJ6GEYK475	M.RESISTOR CH 1/10W 4.7M	2	
R957,58	ERJ6GEYJ472	M.RESISTOR CH 1/10W 4.7K	2	
R959	ERJ6GEYJ471	M.RESISTOR CH 1/10W 470	1	
R960	ERJ6GEYJ153	M.RESISTOR CH 1/10W 15K	1	
R961-63	ERJ6GEYJ103	M.RESISTOR CH 1/10W 10K	3	
R964	ERJ6GEYJ101	M.RESISTOR CH 1/10W 100	1	
R965	ERJ6GEYJ102	M.RESISTOR CH 1/10W 1K	1	
R966-68	ERJ6GEYJ103	M.RESISTOR CH 1/10W 10K	3	
R969,70	ERJ6GEYJ472	M.RESISTOR CH 1/10W 4.7K	2	
R971	ERJ6GEYJ223	M.RESISTOR CH 1/10W 22K	1	
R972	ERDS2TJ331	C.RESISTOR 1/4W 330	1	
R973	ERJ6GEYJ102	M.RESISTOR CH 1/10W 1K	1	
R974	ERJ6GEY0R00	M.RESISTOR CH 1/10W 0	1	
R975,76	ERJ6GEYJ470	M.RESISTOR CH 1/10W 47	2	
R977	ERJ6GEYJ682	M.RESISTOR CH 1/10W 6.8K	1	
R978,79	ERJ6GEYJ221	M.RESISTOR CH 1/10W 220	2	
R980	ERJ6GEYJ682	M.RESISTOR CH 1/10W 6.8K	1	
R981,82	ERJ6GEYJ101	M.RESISTOR CH 1/10W 100	2	
R983,84	ERJ6GEYJ681	M.RESISTOR CH 1/10W 680	2	
R985	ERJ6GEYJ470	M.RESISTOR CH 1/10W 47	1	
R986,87	ERJ6GEYJ331	M.RESISTOR CH 1/10W 330	2	
R989	ERJ6GEYJ472	M.RESISTOR CH 1/10W 4.7K	1	
R991,92	ERJ6GEY0R00	M.RESISTOR CH 1/10W 0	2	
R993	ERDS2TJ331	C.RESISTOR 1/4W 330	1	
R994	ERDS2TJ472	C.RESISTOR 1/4W 4.7K	1	
SW304	VSS0126	SWITCH	1	
SW305,06	VSS0207	SWITCH	2	
SW704	VSS0126	SWITCH	1	
TP301-04	VJR0646	TEST POINT	4	
TP306-13	VJR0646	TEST POINT	8	
TP315	VJR0646	TEST POINT	1	
TP317	VJR0646	TEST POINT	1	
TP701-10	VJR0646	TEST POINT	10	
TP712	VJR0646	TEST POINT	1	
TPG301-03	VJR0646	TEST POINT	3	
TPG701-03	VJR0646	TEST POINT	3	
VC301	ECV1ZW10X53T	V.CAPACITOR 10P	1	
VC701	ECV1ZW20X53T	V.CAPACITOR 20P	1	
VL301,02	EIR7QF016B	COIL	2	
VL303	EIR7QF015B	COIL	1	
VL701	EIR7QF016B	COIL	1	
VL702	EIR7QF015B	COIL	1	
VR301	VRV0109B501	V.RESISTOR 500	1	
VR302	VRV0109B102	V.RESISTOR 1K	1	
VR303	VRV0109B501	V.RESISTOR 500	1	
VR304	VRV0109B102	V.RESISTOR 1K	1	
VR309	VRV0109B101	V.RESISTOR 100	1	
VR310	VRV0109B502	V.RESISTOR 5K	1	
VR311	VRV0109B501	V.RESISTOR 500	1	
VR312	VRV0064B104	V.RESISTOR 100K	1	
VR313,14	VRV0064B502	V.RESISTOR 5K	2	
VR317	VRV0109B501	V.RESISTOR 500	1	
VR318	VRV0109B203	V.RESISTOR 20K	1	
VR319,20	VRV0109B102	V.RESISTOR 1K	2	
VR321	VRV0109B203	V.RESISTOR 20K	1	
VR322	VRV0109B102	V.RESISTOR 1K	1	
VR323	VRV0109B203	V.RESISTOR 20K	1	

Refer to the P.C.BOARDS LIST, page 6-1-1, before using this page.

Ref.No.		Part No.	Part Name & Description	Pcs	Remarks
VR324		VRV0109B102	V.RESISTOR 1K	1	
VR325		VRV0109B202	V.RESISTOR 2K	1	
VR326		VRV0109B102	V.RESISTOR 1K	1	
VR327		VRV0064B203	V.RESISTOR 20K	1	
VR328		VRV0109B203	V.RESISTOR 20K	1	
VR329,30		VRV0112B504	V.RESISTOR 100K	2	
VR331		VRV0109B103	V.RESISTOR 10K	1	
VR701,02		VRV0109B501	V.RESISTOR 500	2	
VR710,11		VRV0064B502	V.RESISTOR 5K	2	
VR714		VRV0109B501	V.RESISTOR 500	1	
VR715		VRV0109B203	V.RESISTOR 20K	1	
VR716,17		VRV0109B102	V.RESISTOR 1K	2	
VR718		VRV0109B203	V.RESISTOR 20K	1	
VR719		VRV0109B102	V.RESISTOR 1K	1	
VR720		VRV0109B203	V.RESISTOR 20K	1	
VR721		VRV0109B102	V.RESISTOR 1K	1	
VR722		VRV0109B202	V.RESISTOR 2K	1	
VR723		VRV0109B102	V.RESISTOR 1K	1	
VR724		VRV0064B203	V.RESISTOR 20K	1	
VR725		VRV0109B504	V.RESISTOR 500K	1	
VR726		VRV0109B103	V.RESISTOR 10K	1	
			MISCELLANEOUS		
		VML2143	CARD PULLER	1	
		VML2144	CARD PULLER	1	
		VMS4174	PIN	6	
		VM21547	BARRIER	1	
		VSC3056	SHIELD CASE	1	
		VXA3966	P.C.B. SHIELD PLATE	1	
		XNG26E	NUT	4	
		XYNV3+K6FR	SCREW	6	
		XYN26+C12	SCREW	4	

Refer to the P.C.BOARDS LIST, page 6-1-1, before using this page.

Ref.No.		Part No.	Part Name & Description	Pcs	Remarks
	■	VEP83098G	P.C.BOARD W/COMPONENT		FOR AU-62-E,B
			W3 MOD & DEMOD		
			CAPACITORS		
C62		ECUM1E104ZFN	C.CAPACITOR CH 25V 0.1U	1	
C63		ECEA1CU101	E.CAPACITOR 16V 100U	1	
C64		ECUM1E104ZFN	C.CAPACITOR CH 25V 0.1U	1	
C65		ECSF1CE106	T.CAPACITOR 16V 10U	1	
C66		ECUM1E104ZFN	C.CAPACITOR CH 25V 0.1U	1	
C67		ECSF1CE106	T.CAPACITOR 16V 10U	1	
C68		ECUM1E104ZFN	C.CAPACITOR CH 25V 0.1U	1	
C69,70		ECSF1CE106	T.CAPACITOR 16V 10U	2	
C71		ECUM1E104ZFN	C.CAPACITOR CH 25V 0.1U	1	
C72		ECEA1CU101	E.CAPACITOR 16V 100U	1	
C301,02		ECUM1H103KBN	C.CAPACITOR CH 50V 0.01U	2	
C303		ECUM1H270JCN	C.CAPACITOR CH 50V 27P	1	
C304,05		ECUM1H103KBN	C.CAPACITOR CH 50V 0.01U	2	
C306		ECUM1H270JCN	C.CAPACITOR CH 50V 27P	1	
C307		ECEA1AU101	E.CAPACITOR 10V 100U	1	
C308,09		ECUM1H103KBN	C.CAPACITOR CH 50V 0.01U	2	
C310		ECEA1AU101	E.CAPACITOR 10V 100U	1	
C311		ECUM1H103KBN	C.CAPACITOR CH 50V 0.01U	1	
C316		ECUM1E104ZFN	C.CAPACITOR CH 25V 0.1U	1	
C322		ECUM1E104ZFN	C.CAPACITOR CH 25V 0.1U	1	
C325		ECUM1E104ZFN	C.CAPACITOR CH 25V 0.1U	1	
C326		ECUM1H103KBN	C.CAPACITOR CH 50V 0.01U	1	
C327		ECUM1E104ZFN	C.CAPACITOR CH 25V 0.1U	1	
C328,29		ECUM1H103KBN	C.CAPACITOR CH 50V 0.01U	2	
C340		ECUM1H103KBN	C.CAPACITOR CH 50V 0.01U	1	
C341		ECEA1CN100S	E.CAPACITOR 16V 10U	1	
C342		ECUM1H103KBN	C.CAPACITOR CH 50V 0.01U	1	
C343		ECUM1H150JCN	C.CAPACITOR CH 50V 15P	1	
C344		ECUM1H101JCN	C.CAPACITOR CH 50V 100P	1	
C345		ECUM1H100DCN	C.CAPACITOR CH 50V 10P	1	
C346		ECUM1H103KBN	C.CAPACITOR CH 50V 0.01U	1	
C347,48		ECEA1AU101	E.CAPACITOR 10V 100U	2	
C349		ECUM1H103KBN	C.CAPACITOR CH 50V 0.01U	1	
C351		ECUM1H221JCN	C.CAPACITOR CH 50V 220P	1	
C352		ECUM1H103KBN	C.CAPACITOR CH 50V 0.01U	1	
C353		ECUM1H680JCN	C.CAPACITOR CH 50V 68P	1	
C354,55		ECUM1H103KBN	C.CAPACITOR CH 50V 0.01U	2	
C356		ECUM1E104ZFN	C.CAPACITOR CH 25V 0.1U	1	
C357		ECEA1HU2R2	E.CAPACITOR 50V 2.2U	1	
C358		ECEA1AU101	E.CAPACITOR 10V 100U	1	
C380		ECUM1E104ZFN	C.CAPACITOR CH 25V 0.1U	1	
C381		ECUM1H103KBN	C.CAPACITOR CH 50V 0.01U	1	
C382		ECUM1E104ZFN	C.CAPACITOR CH 25V 0.1U	1	
C383		ECEA1AU101	E.CAPACITOR 10V 100U	1	
C386		ECUM1H050DCN	C.CAPACITOR CH 50V 50P	1	
C387		ECUM1H100DCN	C.CAPACITOR CH 50V 10P	1	
C389		ECUM1H331JCN	C.CAPACITOR CH 50V 330P	1	
C391		ECUM1H470JCN	C.CAPACITOR CH 50V 47P	1	
C392		ECUM1H103KBN	C.CAPACITOR CH 50V 0.01U	1	
C393		ECEA1AU101	E.CAPACITOR 10V 100U	1	
C394		ECUM1H103KBN	C.CAPACITOR CH 50V 0.01U	1	
C395		ECUM1E104ZFN	C.CAPACITOR CH 25V 0.1U	1	
C396,97		ECUM1H103KBN	C.CAPACITOR CH 50V 0.01U	2	
C398		ECUM1H180JCN	C.CAPACITOR CH 50V 18P	1	
C399		ECUM1H103KBN	C.CAPACITOR CH 50V 0.01U	1	
C400		ECUM1E104ZFN	C.CAPACITOR CH 25V 0.1U	1	
C401-03		ECUM1H103KBN	C.CAPACITOR CH 50V 0.01U	3	
C404		ECEA1AU101	E.CAPACITOR 10V 100U	1	
C405-07		ECUM1E104ZFN	C.CAPACITOR CH 25V 0.1U	3	
C408,09		ECUM1H270JCN	C.CAPACITOR CH 50V 27P	2	
C410		ECEA1AU471	E.CAPACITOR 10V 470U	1	
C411		ECUM1E104ZFN	C.CAPACITOR CH 25V 0.1U	1	
C412		ECUM1H221JCN	C.CAPACITOR CH 50V 220P	1	
C413		ECEA1AU101	E.CAPACITOR 10V 100U	1	

Ref.No.		Part No.	Part Name & Description	Pcs	Remarks
C414		ECUM1H470JCN	C.CAPACITOR CH 50V 47P	1	
C415		ECUM1H180JCN	C.CAPACITOR CH 50V 18P	1	
C416		ECUM1H181JCN	C.CAPACITOR CH 50V 180P	1	
C417,18		ECUM1E104ZFN	C.CAPACITOR CH 25V 0.1U	2	
C419		ECUM1H331JCN	C.CAPACITOR CH 50V 330P	1	
C420		ECUM1H220JCN	C.CAPACITOR CH 50V 22P	1	
C421		ECUM1H680JCN	C.CAPACITOR CH 50V 68P	1	
C422		ECUM1H330JCN	C.CAPACITOR CH 50V 33P	1	
C423		ECEA1AU101	E.CAPACITOR 10V 100U	1	
C424		ECEA1CU100	E.CAPACITOR 16V 10U	1	
C425		ECUM1H221JCN	C.CAPACITOR CH 50V 220P	1	
C426		VCM0044	M.CAPACITOR 130P	1	
C427		VCM0023	M.CAPACITOR 379P	1	
C428		ECUM1H680JCN	C.CAPACITOR CH 50V 68P	1	
C429		ECUM1H390JCN	C.CAPACITOR CH 50V 39P	1	
C430		ECUM1H331JCN	C.CAPACITOR CH 50V 330P	1	
C431		ECUM1H270JCN	C.CAPACITOR CH 50V 27P	1	
C432		ECEA0JU221	E.CAPACITOR 6.3V 220U	1	
C433		ECUM1H050DCN	C.CAPACITOR CH 50V 50P	1	
C434		ECUM1H470JCN	C.CAPACITOR CH 50V 47P	1	
C435		ECUM1H020CCN	C.CAPACITOR CH 50V 2P	1	
C436,37		ECUM1E104ZFN	C.CAPACITOR CH 25V 0.1U	2	
C440		ECUM1H470JCN	C.CAPACITOR CH 50V 47P	1	
C442,43		ECEA1CU221	E.CAPACITOR 16V 220U	2	
C444,45		ECUM1H103KBN	C.CAPACITOR CH 50V 0.01U	2	
C446,47		VCM0027	V.CAPACITOR	2	
C448		ECEA1AU101	E.CAPACITOR 10V 100U	1	
C449		ECUM1E104ZFN	C.CAPACITOR CH 25V 0.1U	1	
C450		ECEA1AU101	E.CAPACITOR 10V 100U	1	
C451		ECEA1CU101	E.CAPACITOR 16V 100U	1	
C453		ECUM1E104ZFN	C.CAPACITOR CH 25V 0.1U	1	
C454		ECUM1H820JCN	C.CAPACITOR CH 50V 82P	1	
C455,56		ECUM1H103KBN	C.CAPACITOR CH 50V 0.01U	2	
C457,58		ECEA1AU101	E.CAPACITOR 10V 100U	2	
C459		ECUM1H151JCN	C.CAPACITOR CH 50V 150P	1	
C460		ECUM1H471JCN	C.CAPACITOR CH 50V 470P	1	
C461,62		ECEA1CU100	E.CAPACITOR 16V 10U	2	
C463		ECUM1H181JCN	C.CAPACITOR CH 50V 180P	1	
C464		ECUM1H680JCN	C.CAPACITOR CH 50V 68P	1	
C465,66		ECEA1AU101	E.CAPACITOR 10V 100U	2	
C467		ECUM1E104ZFN	C.CAPACITOR CH 25V 0.1U	1	
C468		ECUM1H103KBN	C.CAPACITOR CH 50V 0.01U	1	
C469		ECUM1H220JCN	C.CAPACITOR CH 50V 22P	1	
C470		ECCF1H330JC	C.CAPACITOR 50V 33P	1	
C471		ECCF1H060DC	C.CAPACITOR 50V 6P	1	
C701,02		ECUM1H103KBN	C.CAPACITOR CH 50V 0.01U	2	
C703		ECEA1AU101	E.CAPACITOR 10V 100U	1	
C704,05		ECUM1H103KBN	C.CAPACITOR CH 50V 0.01U	2	
C706		ECUM1H330JCN	C.CAPACITOR CH 50V 33P	1	
C725		ECUM1H180JCN	C.CAPACITOR CH 50V 18P	1	
C726		ECUM1H103KBN	C.CAPACITOR CH 50V 0.01U	1	
C727		ECUM1E104ZFN	C.CAPACITOR CH 25V 0.1U	1	
C728		ECUM1H220JCN	C.CAPACITOR CH 50V 22P	1	
C729		ECUM1H121JCN	C.CAPACITOR CH 50V 120P	1	
C730,31		ECUM1H103KBN	C.CAPACITOR CH 50V 0.01U	2	
C732		ECUM1H101JCN	C.CAPACITOR CH 50V 100P	1	
C733		ECEA1AU101	E.CAPACITOR 10V 100U	1	
C734		ECUM1H331JCN	C.CAPACITOR CH 50V 330P	1	
C735		ECEA1AU101	E.CAPACITOR 10V 100U	1	
C736		ECUM1H103KBN	C.CAPACITOR CH 50V 0.01U	1	
C737		ECUM1H101JCN	C.CAPACITOR CH 50V 100P	1	
C738		ECUM1H103KBN	C.CAPACITOR CH 50V 0.01U	1	
C744		ECUM1E104ZFN	C.CAPACITOR CH 25V 0.1U	1	
C745		ECUM1H103KBN	C.CAPACITOR CH 50V 0.01U	1	
C746		ECUM1E104ZFN	C.CAPACITOR CH 25V 0.1U	1	
C747		ECEA1AU101	E.CAPACITOR 10V 100U	1	
C749		ECUM1H561JCN	C.CAPACITOR CH 50V 560P	1	
C750		ECUM1H331JCN	C.CAPACITOR CH 50V 330P	1	
C751		ECUM1H221JCN	C.CAPACITOR CH 50V 220P	1	
C752		ECUM1H561JCN	C.CAPACITOR CH 50V 560P	1	
C753		ECUM1H270JCN	C.CAPACITOR CH 50V 27P	1	
C754		ECUM1H181JCN	C.CAPACITOR CH 50V 180P	1	
C755		ECUM1H270JCN	C.CAPACITOR CH 50V 27P	1	
C756		ECUM1H101JCN	C.CAPACITOR CH 50V 100P	1	
C757		ECUM1H270JCN	C.CAPACITOR CH 50V 27P	1	

Refer to the P.C.BOARDS LIST, page 6-1-1, before using this page.

Ref.No.		Part No.	Part Name & Description	Pcs	Remarks
C758		ECUM1H050DCN	C.CAPACITOR CH 50V 50P	1	
C759		ECUM1E104ZFN	C.CAPACITOR CH 25V 0.1U	1	
C760		ECUM1H100DCN	C.CAPACITOR CH 50V 10P	1	
C762		ECUM1H391JCN	C.CAPACITOR CH 50V 390P	1	
C764		ECUM1H560JCN	C.CAPACITOR CH 50V 56P	1	
C765,66		ECUM1H103KBN	C.CAPACITOR CH 50V 0.01U	2	
C767		ECEA1AU101	E.CAPACITOR 10V 100U	1	
C768,69		ECUM1H103KBN	C.CAPACITOR CH 50V 0.01U	2	
C770		ECUM1H220JCN	C.CAPACITOR CH 50V 22P	1	
C771		ECUM1H681JCN	C.CAPACITOR CH 50V 680P	1	
C772		ECUM1E104ZFN	C.CAPACITOR CH 25V 0.1U	1	
C773-75		ECUM1H103KBN	C.CAPACITOR CH 50V 0.01U	3	
C776		ECUM1E104ZFN	C.CAPACITOR CH 25V 0.1U	1	
C777		ECEA1AU101	E.CAPACITOR 10V 100U	1	
C778,79		ECUM1E104ZFN	C.CAPACITOR CH 25V 0.1U	2	
C780,81		ECUM1H390JCN	C.CAPACITOR CH 50V 39P	2	
C782		ECEA1AU471	E.CAPACITOR 10V 470U	1	
C783		ECUM1E104ZFN	C.CAPACITOR CH 25V 0.1U	1	
C784		ECUM1H221JCN	C.CAPACITOR CH 50V 220P	1	
C785		ECEA1AU101	E.CAPACITOR 10V 100U	1	
C786		ECUM1H121JCN	C.CAPACITOR CH 50V 120P	1	
C787		ECUM1H100DCN	C.CAPACITOR CH 50V 10P	1	
C788		ECUM1H331JCN	C.CAPACITOR CH 50V 330P	1	
C789,90		ECUM1E104ZFN	C.CAPACITOR CH 25V 0.1U	2	
C791		ECUM1H331JCN	C.CAPACITOR CH 50V 330P	1	
C792		ECUM1H220JCN	C.CAPACITOR CH 50V 22P	1	
C793		ECUM1H680JCN	C.CAPACITOR CH 50V 68P	1	
C794		ECUM1H330JCN	C.CAPACITOR CH 50V 33P	1	
C796		ECEA1CU100	E.CAPACITOR 16V 10U	1	
C797		VCM0023	M.CAPACITOR 379P	1	
C799		ECEA0JU221	E.CAPACITOR 6.3V 220U	1	
C800		ECUM1H050DCN	C.CAPACITOR CH 50V 50P	1	
C801		ECUM1H020CCN	C.CAPACITOR CH 50V 2P	1	
C802		ECUM1H330JCN	C.CAPACITOR CH 50V 33P	1	
C803,04		ECUM1E104ZFN	C.CAPACITOR CH 25V 0.1U	2	
C805		ECUM1H470JCN	C.CAPACITOR CH 50V 47P	1	
C808		ECEA1CU221	E.CAPACITOR 16V 220U	1	
C810		ECEA1CU221	E.CAPACITOR 16V 220U	1	
C811,12		ECUM1H103KBN	C.CAPACITOR CH 50V 0.01U	2	
C813,14		VCM0027	V.CAPACITOR	2	
C815		ECEA1AU101	E.CAPACITOR 10V 100U	1	
C816		ECUM1E104ZFN	C.CAPACITOR CH 25V 0.1U	1	
C817		ECEA1AU101	E.CAPACITOR 10V 100U	1	
C818		ECUM1H220JCN	C.CAPACITOR CH 50V 22P	1	
C819		ECEA1CU101	E.CAPACITOR 16V 100U	1	
C821		ECUM1E104ZFN	C.CAPACITOR CH 25V 0.1U	1	
C822		ECUM1H101JCN	C.CAPACITOR CH 50V 100P	1	
C823,24		ECUM1H103KBN	C.CAPACITOR CH 50V 0.01U	2	
C825		ECEA1AU101	E.CAPACITOR 10V 100U	1	
C826		ECUM1H680JCN	C.CAPACITOR CH 50V 68P	1	
C827		ECUM1H100DCN	C.CAPACITOR CH 50V 10P	1	
C828		ECUM1H221JCN	C.CAPACITOR CH 50V 220P	1	
C829		ECEA1AU101	E.CAPACITOR 10V 100U	1	
C830,31		ECEA1CU100	E.CAPACITOR 16V 10U	2	
C832,33		ECEA1AU101	E.CAPACITOR 10V 100U	2	
C834		ECUM1H470JCN	C.CAPACITOR CH 50V 47P	1	
C835		ECUM1H680JCN	C.CAPACITOR CH 50V 68P	1	
C836		ECCF1H330JC	C.CAPACITOR 50V 33P	1	
C837		ECCF1H060DC	C.CAPACITOR 50V 6P	1	
D301		MA151WK	DIODE	1	
D303		MA151K	DIODE	1	
D305		MA151K	DIODE	1	
D306,07		MA151WK	DIODE	2	
D308-10		MA151WA	DIODE	3	
D701		MA151WK	DIODE	1	
D702,03		MA151K	DIODE	2	
D705		MA151K	DIODE	1	
D706		MA151WK	DIODE	1	
D707		MA151WA	DIODE	1	

Ref.No.		Part No.	Part Name & Description	Pcs	Remarks
DL301		VLD0190	DELAY	1	
DL701		VLD0199	DELAY	1	
FL301		VLF0545	FILTER	1	
FL302		VLF0658	FILTER	1	
FL303		VLF0712	FILTER	1	
FL701		VLF0652	FILTER	1	
IC10		AN79N09	IC	1	
IC11,12		AN79M05F	IC	2	
IC13		AN78M05F	IC	1	
IC14		AN78N05	IC	1	
IC15		AN78N09	IC	1	
IC301		AN6308S	IC	1	
IC304		AN6308S	IC	1	
IC305		AN608P	IC	1	
IC306		NJM1496M	IC	1	
IC307		UPD4053BG	IC	1	
IC309		RC082BM	IC	1	
IC311-15		10116D	IC	5	
IC316		SN74LS123NS	IC	1	
IC317		MC74HC00AF	IC	1	
IC319		NE5539D	IC	1	
IC322		NJM592M8	IC	1	
IC323		MC74HC4053F	IC	1	
IC324		RC082BM	IC	1	
IC325		TC74HC221AF	IC	1	
IC326		RC082BM	IC	1	
IC701		AN6308S	IC	1	
IC705		NJM1496M	IC	1	
IC706		UPD4053BG	IC	1	
IC708-12		10116D	IC	5	
IC716		NE5539D	IC	1	
IC719		NJM592M8	IC	1	
IC720		MC74HC4053F	IC	1	
IC721		RC082BM	IC	1	
IC722		TC74HC221AF	IC	1	
L301		VLQEL05F101K	COIL 100UH	1	
L302,03		VLQEL05S100J	COIL 10UH	2	
L304		VLQEL05F101K	COIL 100UH	1	
L308		VLQEL05S3R3J	COIL 3.3UH	1	
L309,10		VLQEL05F101K	COIL 100UH	2	
L311		VLQEL05S330J	COIL 33UH	1	
L312		VLQEL05S2R7J	COIL 2.7UH	1	
L313		VLQEL05F101K	COIL 100UH	1	
L318		VLQEL05F101K	COIL 100UH	1	
L320,21		VLQEL05S2R2J	COIL 2.2UH	2	
L322		VLQEL05S180J	COIL 18UH	1	
L323		VLQEL05F101K	COIL 100UH	1	
L324		VLQEL05S1R0J	COIL 1UH	1	
L325-27		VLQEL05F101K	COIL 100UH	3	
L328		VLQEL05S6R8J	COIL 6.8UH	1	
L329		VLQEL05F101K	COIL 100UH	1	
L330		VLQEL05S3R3J	COIL 3.3UH	1	
L333		VLQEL05F101K	COIL 100UH	1	
L334		VLQEL05S6R8K	COIL 6.8UH	1	
L335		VLQEL05F101K	COIL 100UH	1	
L339		VLQEL05S6R8J	COIL 6.8UH	1	
L340,41		VLQEL05F101K	COIL 100UH	2	
L342		VLQEL05S820J	COIL 82UH	1	
L343,44		VLQEL05F101K	COIL 100UH	2	
L701		VLQEL05F101K	COIL 100UH	1	
L702		VLQEL05S150J	COIL 15UH	1	
L709		VLQEL05S4R7J	COIL 4.7UH	1	
L710		VLQEL05F101K	COIL 100UH	1	
L711		VLQEL05S560J	COIL 56UH	1	
L712		VLQEL05F101K	COIL 100UH	1	
L713		VLQEL05S3R9J	COIL 3.9UH	1	

Refer to the P.C.BOARDS LIST, page 6-1-1, before using this page.

Ref.No.		Part No.	Part Name & Description	Pcs	Remarks
L715		VLQEL05F101K	COIL 100UH	1	
L716		VLQEL05S181J	COIL 180UH	1	
L717		VLQEL05S680J	COIL 68UH	1	
L718		VLQEL05S2R2J	COIL 2.2UH	1	
L719,20		VLQEL05S6R8J	COIL 6.8UH	2	
L721		VLQEL05S4R7J	COIL 4.7UH	1	
L722		VLQEL05S2R7J	COIL 2.7UH	1	
L723		VLQEL05S270J	COIL 27UH	1	
L724		VLQEL05F101K	COIL 100UH	1	
L725		VLQEL05S1R5J	COIL 1.5UH	1	
L726-28		VLQEL05F101K	COIL 100UH	3	
L729		VLQEL05S150J	COIL 15UH	1	
L731		VLQEL05F101K	COIL 100UH	1	
L732		VLQEL05S6R8K	COIL 6.8UH	1	
L733		VLQEL05F101K	COIL 100UH	1	
L737		VLQEL05S220J	COIL 22UH	1	
L738		VLQEL05S390J	COIL 39UH	1	
L739-42		VLQEL05F101K	COIL 100UH	4	
Q301-04		2SC2295	TRANSISTOR CHIP	4	(B,C)
Q309,10		2SC2295	TRANSISTOR CHIP	2	(B,C)
Q311		2SA1022-C	TRANSISTOR CHIP	1	(B,C)
Q313,14		2SC2295	TRANSISTOR CHIP	2	(B,C)
Q315		2SA1022-C	TRANSISTOR CHIP	1	(B,C)
Q316		2SC2295	TRANSISTOR CHIP	1	(B,C)
Q317,18		2SA1022-C	TRANSISTOR CHIP	2	(B,C)
Q319		IMX4	TRANSISTOR	1	
Q320		UN2113	TRANSISTOR-RESISTOR	1	
Q324		2SC2295	TRANSISTOR CHIP	1	(B,C)
Q326		2SC2295	TRANSISTOR CHIP	1	(B,C)
Q327		2SA1022-C	TRANSISTOR CHIP	1	(B,C)
Q329-38		2SC2295	TRANSISTOR CHIP	10	(B,C)
Q339,40		UN2213	TRANSISTOR-RESISTOR	2	
Q341		2SA1462	TRANSISTOR	1	
Q342,43		2SC3757	TRANSISTOR	2	(Q,R)
Q344		2SC2295	TRANSISTOR CHIP	1	(B,C)
Q345		2SA1022-C	TRANSISTOR CHIP	1	(B,C)
Q346		2SC2480	TRANSISTOR	1	
Q347		2SA1462	TRANSISTOR	1	
Q348		2SC2480	TRANSISTOR	1	
Q349,50		2SA1226	TRANSISTOR	2	
Q351		2SK374	TRANSISTOR	1	
Q352		2SC3757	TRANSISTOR	1	(Q,R)
Q353		2SA1226	TRANSISTOR	1	
Q356-61		UN2113	TRANSISTOR-RESISTOR	6	
Q362,63		2SC2295	TRANSISTOR CHIP	2	(B,C)
Q364		2SA1022-C	TRANSISTOR CHIP	1	(B,C)
Q365,66		2SA1226	TRANSISTOR	2	
Q367		2SC3757	TRANSISTOR	1	(Q,R)
Q368,69		2SC2295	TRANSISTOR CHIP	2	(B,C)
Q370,71		UN2113	TRANSISTOR-RESISTOR	2	
Q372		2SC2295	TRANSISTOR CHIP	1	(B,C)
Q373-75		UN2213	TRANSISTOR-RESISTOR	3	
Q376		2SA1462	TRANSISTOR	1	
Q377		2SA1226	TRANSISTOR	1	
Q378		2SB709	TRANSISTOR CHIP	1	(Q,R)
Q379		2SC2480	TRANSISTOR	1	
Q380,81		2SC2295	TRANSISTOR CHIP	2	(B,C)
Q382-84		2SC3757	TRANSISTOR	3	(Q,R)
Q385,86		2SC2295	TRANSISTOR CHIP	2	(B,C)
Q387		2SA1022-C	TRANSISTOR CHIP	1	(B,C)
Q388		2SD601	TRANSISTOR CHIP	1	(Q,R)
Q389		2SB709	TRANSISTOR CHIP	1	(Q,R)
Q701,02		2SA1022-C	TRANSISTOR CHIP	2	(B,C)
Q710,11		2SC2295	TRANSISTOR CHIP	2	(B,C)
Q712		2SA1022-C	TRANSISTOR CHIP	1	(B,C)
Q713		2SC2295	TRANSISTOR CHIP	1	(B,C)
Q714,15		2SA1022-C	TRANSISTOR CHIP	2	(B,C)
Q716		2SC2295	TRANSISTOR CHIP	1	(B,C)
Q718		2SC2295	TRANSISTOR CHIP	1	(B,C)
Q719		2SA1022-C	TRANSISTOR CHIP	1	(B,C)
Q721-30		2SC2295	TRANSISTOR CHIP	10	(B,C)
Q731		UN2213	TRANSISTOR-RESISTOR	1	

Ref.No.		Part No.	Part Name & Description	Pcs	Remarks
Q732		2SA1462	TRANSISTOR	1	
Q733		2SC2295	TRANSISTOR CHIP	1	(B,C)
Q734		2SA1022-C	TRANSISTOR CHIP	1	(B,C)
Q735		2SC2480	TRANSISTOR	1	
Q736		2SA1462	TRANSISTOR	1	
Q737		2SC2480	TRANSISTOR	1	
Q738,39		2SA1226	TRANSISTOR	2	
Q740		2SK374	TRANSISTOR	1	
Q741		2SC3757	TRANSISTOR	1	(Q,R)
Q742		2SA1226	TRANSISTOR	1	
Q745,46		2SC2295	TRANSISTOR CHIP	2	(B,C)
Q747		2SA1022-C	TRANSISTOR CHIP	1	(B,C)
Q748,49		2SA1226	TRANSISTOR	2	
Q750		2SC3757	TRANSISTOR	1	(Q,R)
Q751		2SC2295	TRANSISTOR CHIP	1	(B,C)
Q753		2SC2295	TRANSISTOR CHIP	1	(B,C)
Q754		2SA1462	TRANSISTOR	1	
Q755		2SA1226	TRANSISTOR	1	
Q756		2SB709	TRANSISTOR CHIP	1	(Q,R)
Q757		2SC2480	TRANSISTOR	1	
Q758-60		2SC3757	TRANSISTOR	3	(Q,R)
Q761		2SC2295	TRANSISTOR CHIP	1	(B,C)
Q762		2SA1022-C	TRANSISTOR CHIP	1	(B,C)
Q763		2SD601	TRANSISTOR CHIP	1	(Q,R)
Q764		2SB709	TRANSISTOR CHIP	1	(Q,R)
			RESISTORS		
R20		ERJ6GEYJ472	M.RESISTOR CH 1/10W 4.7K	1	
R101		ERJ6GEYJ470	M.RESISTOR CH 1/10W 47	1	
R301		ERJ6GEYJ470	M.RESISTOR CH 1/10W 47	1	
R302		ERJ6GEYJ681	M.RESISTOR CH 1/10W 680	1	
R303		ERJ6GEYJ102	M.RESISTOR CH 1/10W 1K	1	
R304		ERJ6GEYJ332	M.RESISTOR CH 1/10W 3.3K	1	
R305		ERJ6GEYJ470	M.RESISTOR CH 1/10W 47	1	
R306		ERJ6GEYJ681	M.RESISTOR CH 1/10W 680	1	
R307		ERJ6GEYJ102	M.RESISTOR CH 1/10W 1K	1	
R308		ERJ6GEYJ332	M.RESISTOR CH 1/10W 3.3K	1	
R309		ERJ6GEYJ222	M.RESISTOR CH 1/10W 2.2K	1	
R310		ERJ6GEYJ470	M.RESISTOR CH 1/10W 47	1	
R322		ERJ6GEYJ470	M.RESISTOR CH 1/10W 47	1	
R323		ERJ6GEYJ152	M.RESISTOR CH 1/10W 1.5K	1	
R324		ERJ6GEYJ470	M.RESISTOR CH 1/10W 47	1	
R325,26		ERJ6GEYJ102	M.RESISTOR CH 1/10W 1K	2	
R327		ERJ6GEYJ103	M.RESISTOR CH 1/10W 10K	1	
R328		ERJ6GEYJ105	M.RESISTOR CH 1/10W 1M	1	
R329		ERJ6GEYJ224	M.RESISTOR CH 1/10W 220K	1	
R330		ERJ6GEYJ473	M.RESISTOR CH 1/10W 47K	1	
R331		ERJ6GEYJ223	M.RESISTOR CH 1/10W 22K	1	
R332		ERJ6GEYJ152	M.RESISTOR CH 1/10W 1.5K	1	
R333,34		ERJ6GEYG471	M.RESISTOR CH 1/10W 470	2	
R335,36		ERJ6GEYJ470	M.RESISTOR CH 1/10W 47	2	
R337,38		ERJ6GEYJ222	M.RESISTOR CH 1/10W 2.2K	2	
R339,40		ERJ6GEYJ271	M.RESISTOR CH 1/10W 270	2	
R341		ERJ6GEYJ470	M.RESISTOR CH 1/10W 47	1	
R342		ERJ6GEYJ271	M.RESISTOR CH 1/10W 270	1	
R343		ERJ6GEYJ821	M.RESISTOR CH 1/10W 820	1	
R344		ERJ6GEYJ470	M.RESISTOR CH 1/10W 47	1	
R345		ERJ6GEYJ222	M.RESISTOR CH 1/10W 2.2K	1	
R346		ERJ6GEYJ102	M.RESISTOR CH 1/10W 1K	1	
R347		ERJ6GEYG331	M.RESISTOR CH 1/10W 330	1	
R348		ERJ6GEYJ153	M.RESISTOR CH 1/10W 15K	1	
R349		ERJ6GEYJ223	M.RESISTOR CH 1/10W 22K	1	
R350,51		ERJ6GEYJ220	M.RESISTOR CH 1/10W 22	2	
R352		ERJ6GEYJ470	M.RESISTOR CH 1/10W 47	1	
R353		ERJ6GEYJ152	M.RESISTOR CH 1/10W 1.5K	1	
R354		ERJ6GEYJ471	M.RESISTOR CH 1/10W 470	1	
R355		ERJ6GEYJ102	M.RESISTOR CH 1/10W 1K	1	
R356		ERJ6GEYJ221	M.RESISTOR CH 1/10W 220	1	
R357		ERJ6GEYJ222	M.RESISTOR CH 1/10W 2.2K	1	
R358		ERJ6GEYJ101	M.RESISTOR CH 1/10W 100	1	
R359		ERJ6GEYJ472	M.RESISTOR CH 1/10W 4.7K	1	
R360,61		ERJ6GEYJ473	M.RESISTOR CH 1/10W 47K	2	
R362		ERJ6GEYJ472	M.RESISTOR CH 1/10W 4.7K	1	

Refer to the P.C.BOARDS LIST, page 6-1-1, before using this page.

Ref.No.		Part No.	Part Name & Description	Pcs	Remarks
R363		ERJ6GEYJ223	M.RESISTOR CH 1/10W 22K	1	
R364		ERJ6GEYJ273	M.RESISTOR CH 1/10W 27K	1	
R365		ERJ6GEYJ473	M.RESISTOR CH 1/10W 47K	1	
R366		ERJ6GEYJ223	M.RESISTOR CH 1/10W 22K	1	
R367		ERJ6GEYJ104	M.RESISTOR CH 1/10W 100K	1	
R368		ERJ6GEYJ472	M.RESISTOR CH 1/10W 4.7K	1	
R369		ERJ6GEYJ103	M.RESISTOR CH 1/10W 10K	1	
R370		ERJ6GEYJ223	M.RESISTOR CH 1/10W 22K	1	
R371		ERJ6GEYJ682	M.RESISTOR CH 1/10W 6.8K	1	
R397		ERJ6GEYJ470	M.RESISTOR CH 1/10W 47	1	
R398		ERJ6GEYJ152	M.RESISTOR CH 1/10W 1.5K	1	
R399,00		ERJ6GEYG301	M.RESISTOR CH 1/10W 300	2	
R401		ERJ6GEYJ470	M.RESISTOR CH 1/10W 47	1	
R402		ERJ6GEYJ102	M.RESISTOR CH 1/10W 1K	1	
R403		ERJ6GEYJ681	M.RESISTOR CH 1/10W 680	1	
R404		ERJ6GEYJ102	M.RESISTOR CH 1/10W 1K	1	
R405		ERJ6GEYJ152	M.RESISTOR CH 1/10W 1.5K	1	
R406		ERJ6GEYJ470	M.RESISTOR CH 1/10W 47	1	
R407		ERJ6GEYJ221	M.RESISTOR CH 1/10W 220	1	
R408		ERJ6GEYJ222	M.RESISTOR CH 1/10W 2.2K	1	
R409		ERJ6GEYJ470	M.RESISTOR CH 1/10W 47	1	
R410		ERJ6GEYJ152	M.RESISTOR CH 1/10W 1.5K	1	
R411,12		ERJ6GEYJ331	M.RESISTOR CH 1/10W 330	2	
R413		ERJ6GEYJ470	M.RESISTOR CH 1/10W 47	1	
R414		ERJ6GEYJ222	M.RESISTOR CH 1/10W 2.2K	1	
R415		ERJ6GEYJ470	M.RESISTOR CH 1/10W 47	1	
R426		ERJ6GEYJ470	M.RESISTOR CH 1/10W 47	1	
R427-34		ERJ6GEYJ102	M.RESISTOR CH 1/10W 1K	8	
R435,36		ERJ6GEYJ332	M.RESISTOR CH 1/10W 3.3K	2	
R437		ERJ6GEYJ101	M.RESISTOR CH 1/10W 100	1	
R438,39		ERJ6GEYJ471	M.RESISTOR CH 1/10W 470	2	
R440		ERJ6GEYJ470	M.RESISTOR CH 1/10W 47	1	
R441,42		ERJ6GEYJ681	M.RESISTOR CH 1/10W 680	2	
R443,44		ERJ6GEYJ101	M.RESISTOR CH 1/10W 100	2	
R445		ERJ6GEYJ470	M.RESISTOR CH 1/10W 47	1	
R446		ERJ6GEYJ151	M.RESISTOR CH 1/10W 150	1	
R447,48		ERJ6GEYJ222	M.RESISTOR CH 1/10W 2.2K	2	
R449		ERJ6GEYJ470	M.RESISTOR CH 1/10W 47	1	
R450,51		ERJ6GEYJ222	M.RESISTOR CH 1/10W 2.2K	2	
R452,53		ERJ6GEYJ470	M.RESISTOR CH 1/10W 47	2	
R454-65		ERJ6GEYJ102	M.RESISTOR CH 1/10W 1K	12	
R466		ERJ6GEYJ683	M.RESISTOR CH 1/10W 68K	1	
R467,68		ERJ6GEYJ103	M.RESISTOR CH 1/10W 10K	2	
R469,70		ERJ6GEYJ150	M.RESISTOR CH 1/10W 15	2	
R471,72		ERJ6GEYJ332	M.RESISTOR CH 1/10W 3.3K	2	
R473		ERJ6GEYJ101	M.RESISTOR CH 1/10W 100	1	
R474		ERDS2TJ222	C.RESISTOR 1/4W 2.2K	1	
R475		ERJ6GEYJ102	M.RESISTOR CH 1/10W 1K	1	
R477		ERJ6GEYJ471	M.RESISTOR CH 1/10W 470	1	
R478		ERJ6GEYJ102	M.RESISTOR CH 1/10W 1K	1	
R479		ERJ6GEYJ222	M.RESISTOR CH 1/10W 2.2K	1	
R480,81		ERJ6GEYJ471	M.RESISTOR CH 1/10W 470	2	
R482		ERJ6GEYJ470	M.RESISTOR CH 1/10W 47	1	
R483,84		ERJ6GEYJ333	M.RESISTOR CH 1/10W 33K	2	
R485,86		ERJ6GEYJ102	M.RESISTOR CH 1/10W 1K	2	
R487		ERJ6GEYJ222	M.RESISTOR CH 1/10W 2.2K	1	
R488		ERJ6GEYJ221	M.RESISTOR CH 1/10W 220	1	
R489		ERJ6GEYJ392	M.RESISTOR CH 1/10W 3.9K	1	
R490		ERJ6GEYJ470	M.RESISTOR CH 1/10W 47	1	
R491		ERJ6GEYJ333	M.RESISTOR CH 1/10W 33K	1	
R492		ERJ6GEYJ471	M.RESISTOR CH 1/10W 470	1	
R493		ERJ6GEYJ152	M.RESISTOR CH 1/10W 1.5K	1	
R494,95		ERJ6GEYJ101	M.RESISTOR CH 1/10W 100	2	
R496		ERJ6GEYJ222	M.RESISTOR CH 1/10W 2.2K	1	
R497		ERJ6GEYJ102	M.RESISTOR CH 1/10W 1K	1	
R498		ERJ6GEYJ101	M.RESISTOR CH 1/10W 100	1	
R499		ERJ6GEYJ332	M.RESISTOR CH 1/10W 3.3K	1	
R500		ERJ6GEYJ223	M.RESISTOR CH 1/10W 22K	1	
R501		ERJ6GEYJ332	M.RESISTOR CH 1/10W 3.3K	1	
R502		ERJ6GEYJ472	M.RESISTOR CH 1/10W 4.7K	1	
R503		ERJ6GEYJ103	M.RESISTOR CH 1/10W 10K	1	
R504		ERJ6GEYJ683	M.RESISTOR CH 1/10W 68K	1	
R505,06		ERJ6GEYJ473	M.RESISTOR CH 1/10W 47K	2	
R508		ERJ6GEYJ471	M.RESISTOR CH 1/10W 470	1	
R509		ERJ6GEYJ221	M.RESISTOR CH 1/10W 220	1	

Ref.No.		Part No.	Part Name & Description	Pcs	Remarks
R510		ERJ6GEYJ392	M.RESISTOR CH 1/10W 3.9K	1	
R511		VRE0034E27B	M.RESISTOR CH 1/10W 1.87K	1	
R512		VRE0034E751	M.RESISTOR CH 1/10W 750	1	
R513		ERJ6GEYJ332	M.RESISTOR CH 1/10W 3.3K	1	
R514		ERJ6GEYJ152	M.RESISTOR CH 1/10W 1.5K	1	
R515		ERJ6GEYJ682	M.RESISTOR CH 1/10W 6.8K	1	
R516		ERJ6GEYG301	M.RESISTOR CH 1/10W 300	1	
R518		ERJ6GEYG471	M.RESISTOR CH 1/10W 470	1	
R519		ERJ6GEYJ332	M.RESISTOR CH 1/10W 3.3K	1	
R520		ERJ6GEYJ101	M.RESISTOR CH 1/10W 100	1	
R521		ERJ6GEYJ151	M.RESISTOR CH 1/10W 150	1	
R522		VRE0034E26A	M.RESISTOR CH 1/10W 182	1	
R523		ERJ6GEYJ331	M.RESISTOR CH 1/10W 330	1	
R524		VRE0034E89A	M.RESISTOR CH 1/10W 825	1	
R525		ERJ6GEYG331	M.RESISTOR CH 1/10W 330	1	
R526,27		ERJ6GEYJ470	M.RESISTOR CH 1/10W 47	2	
R528		ERJ6GEYJ101	M.RESISTOR CH 1/10W 100	1	
R529		ERJ6GEYJ102	M.RESISTOR CH 1/10W 1K	1	
R530		ERJ6GEYJ681	M.RESISTOR CH 1/10W 680	1	
R531,32		ERJ6GEYJ273	M.RESISTOR CH 1/10W 27K	2	
R533,34		ERJ6GEYJ183	M.RESISTOR CH 1/10W 18K	2	
R535,36		ERJ6GEYJ221	M.RESISTOR CH 1/10W 220	2	
R537		ERJ6GEYG223	M.RESISTOR CH 1/10W 22K	1	
R538		ERJ6GEYJ470	M.RESISTOR CH 1/10W 47	1	
R539		ERJ6GEYG331	M.RESISTOR CH 1/10W 330	1	
R540		VRE0034E26A	M.RESISTOR CH 1/10W 182	1	
R541		VRE0034E89A	M.RESISTOR CH 1/10W 825	1	
R542		VRE0034E59A	M.RESISTOR CH 1/10W 413	1	
R543		VRE0034E102	M.RESISTOR CH 1/10W 1K	1	
R544		ERJ6GEYJ392	M.RESISTOR CH 1/10W 3.9K	1	
R545		ERJ6GEYJ222	M.RESISTOR CH 1/10W 2.2K	1	
R546		ERJ6GEYJ470	M.RESISTOR CH 1/10W 47	1	
R547		ERJ6GEYJ222	M.RESISTOR CH 1/10W 2.2K	1	
R548		ERJ6GEYJ470	M.RESISTOR CH 1/10W 47	1	
R550		ERJ6GEYJ472	M.RESISTOR CH 1/10W 4.7K	1	
R551		ERJ6GEYJ473	M.RESISTOR CH 1/10W 47K	1	
R552		ERJ6GEYJ332	M.RESISTOR CH 1/10W 3.3K	1	
R553		ERJ6GEYJ471	M.RESISTOR CH 1/10W 470	1	
R554		ERJ6GEYJ102	M.RESISTOR CH 1/10W 1K	1	
R555		ERJ6GEYJ472	M.RESISTOR CH 1/10W 4.7K	1	
R556		ERJ6GEYJ222	M.RESISTOR CH 1/10W 2.2K	1	
R561-63		ERJ6GEYJ473	M.RESISTOR CH 1/10W 47K	3	
R564		ERJ6GEYJ222	M.RESISTOR CH 1/10W 2.2K	1	
R565		ERJ6GEYJ223	M.RESISTOR CH 1/10W 22K	1	
R566		ERJ6GEYJ222	M.RESISTOR CH 1/10W 2.2K	1	
R567		ERJ6GEYJ223	M.RESISTOR CH 1/10W 22K	1	
R568		ERJ6GEYJ331	M.RESISTOR CH 1/10W 330	1	
R569,70		ERJ6GEYJ470	M.RESISTOR CH 1/10W 47	2	
R571		ERJ6GEYJ152	M.RESISTOR CH 1/10W 1.5K	1	
R572		ERJ6GEYJ222	M.RESISTOR CH 1/10W 2.2K	1	
R573,74		ERJ6GEYJ470	M.RESISTOR CH 1/10W 47	2	
R575,76		ERJ6GEYJ222	M.RESISTOR CH 1/10W 2.2K	2	
R577		ERJ6GEYJ471	M.RESISTOR CH 1/10W 470	1	
R578		ERJ6GEYJ470	M.RESISTOR CH 1/10W 47	1	
R579		ERJ6GEYJ152	M.RESISTOR CH 1/10W 1.5K	1	
R580		ERJ6GEYJ221	M.RESISTOR CH 1/10W 220	1	
R581		ERJ6GEYJ222	M.RESISTOR CH 1/10W 2.2K	1	
R582		ERJ6GEYJ682	M.RESISTOR CH 1/10W 6.8K	1	
R583		ERJ6GEYJ182	M.RESISTOR CH 1/10W 1.8K	1	
R584		ERJ6GEYJ471	M.RESISTOR CH 1/10W 470	1	
R585		ERJ6GEYJ332	M.RESISTOR CH 1/10W 3.3K	1	
R586		ERJ6GEYJ222	M.RESISTOR CH 1/10W 2.2K	1	
R587,88		ERJ6GEYJ224	M.RESISTOR CH 1/10W 220K	2	
R589		ERJ6GEYJ103	M.RESISTOR CH 1/10W 10K	1	
R590		ERJ6GEYJ332	M.RESISTOR CH 1/10W 3.3K	1	
R591		ERJ6GEYJ471	M.RESISTOR CH 1/10W 470	1	
R592		ERJ6GEYJ332	M.RESISTOR CH 1/10W 3.3K	1	
R593		ERJ6GEYJ273	M.RESISTOR CH 1/10W 27K	1	
R594		ERJ6GEYJ562	M.RESISTOR CH 1/10W 5.6K	1	
R595,96		ERJ6GEYK475	M.RESISTOR CH 1/10W 4.7M	2	
R597		ERJ6GEYJ272	M.RESISTOR CH 1/10W 2.7K	1	
R598		ERJ6GEYJ471	M.RESISTOR CH 1/10W 470	1	
R599		ERJ6GEYJ102	M.RESISTOR CH 1/10W 1K	1	
R600		ERJ6GEYJ472	M.RESISTOR CH 1/10W 4.7K	1	
R601		ERJ6GEYJ102	M.RESISTOR CH 1/10W 1K	1	

Refer to the P.C.BOARDS LIST, page 6-1-1, before using this page.

Ref.No.	Part No.	Part Name & Description	Pcs	Remarks
R602	ERJ6GEYJ472	M.RESISTOR CH 1/10W 4.7K	1	
R603,04	ERJ6GEYJ474	M.RESISTOR CH 1/10W 470K	2	
R605,06	ERJ6GEYK475	M.RESISTOR CH 1/10W 4.7M	2	
R607	ERJ6GEYJ223	M.RESISTOR CH 1/10W 22K	1	
R608,09	ERJ6GEYJ472	M.RESISTOR CH 1/10W 4.7K	2	
R610	ERJ6GEYJ104	M.RESISTOR CH 1/10W 100K	1	
R611	ERJ6GEYJ472	M.RESISTOR CH 1/10W 4.7K	1	
R612	ERJ6GEYJ471	M.RESISTOR CH 1/10W 470	1	
R613	ERJ6GEYJ223	M.RESISTOR CH 1/10W 22K	1	
R614	ERJ6GEYJ224	M.RESISTOR CH 1/10W 220K	1	
R615	ERJ6GEYJ103	M.RESISTOR CH 1/10W 10K	1	
R616	ERJ6GEYJ104	M.RESISTOR CH 1/10W 100K	1	
R617-19	ERJ6GEYJ103	M.RESISTOR CH 1/10W 10K	3	
R620	ERJ6GEYJ101	M.RESISTOR CH 1/10W 100	1	
R621,22	ERJ6GEYJ474	M.RESISTOR CH 1/10W 470K	2	
R623	ERJ6GEYJ153	M.RESISTOR CH 1/10W 15K	1	
R624-26	ERJ6GEYJ103	M.RESISTOR CH 1/10W 10K	3	
R627	ERJ6GEYJ472	M.RESISTOR CH 1/10W 4.7K	1	
R628	ERJ6GEYJ223	M.RESISTOR CH 1/10W 22K	1	
R629	ERJ6GEYJ472	M.RESISTOR CH 1/10W 4.7K	1	
R630,31	ERJ6GEYJ101	M.RESISTOR CH 1/10W 100	2	
R632	ERJ6GEYJ102	M.RESISTOR CH 1/10W 1K	1	
R633	ERDS2TJ331	C.RESISTOR 1/4W 330	1	
R635,36	ERJ6GEYJ470	M.RESISTOR CH 1/10W 47	2	
R637	ERJ6GEYJ102	M.RESISTOR CH 1/10W 1K	1	
R638	ERJ6GEY0R00	M.RESISTOR CH 1/10W 0	1	
R639,40	ERJ6GEYJ331	M.RESISTOR CH 1/10W 330	2	
R643	ERJ6GEYJ331	M.RESISTOR CH 1/10W 330	1	
R644,45	ERJ6GEYJ470	M.RESISTOR CH 1/10W 47	2	
R646	ERJ6GEYJ682	M.RESISTOR CH 1/10W 6.8K	1	
R647,48	ERJ6GEYJ221	M.RESISTOR CH 1/10W 220	2	
R649	ERJ6GEYJ682	M.RESISTOR CH 1/10W 6.8K	1	
R650-53	ERJ6GEYJ101	M.RESISTOR CH 1/10W 100	4	
R654,55	ERJ6GEYJ681	M.RESISTOR CH 1/10W 680	2	
R656	ERJ6GEYJ470	M.RESISTOR CH 1/10W 47	1	
R660	ERDS2TJ331	C.RESISTOR 1/4W 330	1	
R661	ERDS2TJ472	C.RESISTOR 1/4W 4.7K	1	
R701	ERJ6GEYJ470	M.RESISTOR CH 1/10W 47	1	
R702	ERJ6GEYJ102	M.RESISTOR CH 1/10W 1K	1	
R703	ERJ6GEYJ821	M.RESISTOR CH 1/10W 820	1	
R704	ERJ6GEY0R00	M.RESISTOR CH 1/10W 0	1	
R705	ERJ6GEYJ332	M.RESISTOR CH 1/10W 3.3K	1	
R712	ERJ6GEYJ470	M.RESISTOR CH 1/10W 47	1	
R723,24	ERJ6GEYJ101	M.RESISTOR CH 1/10W 100	2	
R725	ERJ6GEYJ102	M.RESISTOR CH 1/10W 1K	1	
R726	ERJ6GEYJ470	M.RESISTOR CH 1/10W 47	1	
R727	ERJ6GEYG471	M.RESISTOR CH 1/10W 470	1	
R728,29	ERJ6GEYJ470	M.RESISTOR CH 1/10W 47	2	
R730	ERJ6GEYG471	M.RESISTOR CH 1/10W 470	1	
R731	ERJ6GEYJ222	M.RESISTOR CH 1/10W 2.2K	1	
R732,33	ERJ6GEYG821	M.RESISTOR CH 1/10W 820	2	
R734	ERJ6GEYJ222	M.RESISTOR CH 1/10W 2.2K	1	
R735	ERJ6GEYJ470	M.RESISTOR CH 1/10W 47	1	
R736	ERJ6GEYJ271	M.RESISTOR CH 1/10W 270	1	
R737	ERJ6GEYJ332	M.RESISTOR CH 1/10W 3.3K	1	
R738	ERJ6GEYJ821	M.RESISTOR CH 1/10W 820	1	
R739	ERJ6GEYJ470	M.RESISTOR CH 1/10W 47	1	
R740	ERJ6GEYJ222	M.RESISTOR CH 1/10W 2.2K	1	
R741	ERJ6GEYJ272	M.RESISTOR CH 1/10W 2.7K	1	
R742	ERJ6GEYG331	M.RESISTOR CH 1/10W 330	1	
R743	ERJ6GEYJ153	M.RESISTOR CH 1/10W 15K	1	
R744	ERJ6GEYJ473	M.RESISTOR CH 1/10W 47K	1	
R745,46	ERJ6GEYJ220	M.RESISTOR CH 1/10W 22	2	
R747	ERJ6GEYJ470	M.RESISTOR CH 1/10W 47	1	
R748	ERJ6GEYJ152	M.RESISTOR CH 1/10W 1.5K	1	
R749	ERJ6GEYJ331	M.RESISTOR CH 1/10W 330	1	
R750	ERJ6GEYJ102	M.RESISTOR CH 1/10W 1K	1	
R751	ERJ6GEYJ221	M.RESISTOR CH 1/10W 220	1	
R752	ERJ6GEYJ222	M.RESISTOR CH 1/10W 2.2K	1	
R753	ERJ6GEYJ472	M.RESISTOR CH 1/10W 4.7K	1	
R754	ERJ6GEYJ103	M.RESISTOR CH 1/10W 10K	1	
R755	ERJ6GEYJ472	M.RESISTOR CH 1/10W 4.7K	1	
R756	ERJ6GEYJ682	M.RESISTOR CH 1/10W 6.8K	1	
R760	ERJ6GEYJ470	M.RESISTOR CH 1/10W 47	1	
R761	ERJ6GEYJ152	M.RESISTOR CH 1/10W 1.5K	1	

Ref.No.	Part No.	Part Name & Description	Pcs	Remarks
R762,63	ERJ6GEYG301	M.RESISTOR CH 1/10W 300	2	
R764	ERJ6GEYJ470	M.RESISTOR CH 1/10W 47	1	
R765	ERJ6GEYJ102	M.RESISTOR CH 1/10W 1K	1	
R766	ERJ6GEYJ681	M.RESISTOR CH 1/10W 680	1	
R767	ERJ6GEYJ102	M.RESISTOR CH 1/10W 1K	1	
R768	ERJ6GEYJ152	M.RESISTOR CH 1/10W 1.5K	1	
R769	ERJ6GEYJ470	M.RESISTOR CH 1/10W 47	1	
R770	ERJ6GEYJ221	M.RESISTOR CH 1/10W 220	1	
R771	ERJ6GEYJ222	M.RESISTOR CH 1/10W 2.2K	1	
R772	ERJ6GEYJ470	M.RESISTOR CH 1/10W 47	1	
R773	ERJ6GEYJ152	M.RESISTOR CH 1/10W 1.5K	1	
R774,75	ERJ6GEYJ331	M.RESISTOR CH 1/10W 330	2	
R776	ERJ6GEYJ470	M.RESISTOR CH 1/10W 47	1	
R777	ERJ6GEYJ222	M.RESISTOR CH 1/10W 2.2K	1	
R778	ERJ6GEYJ470	M.RESISTOR CH 1/10W 47	1	
R789	ERJ6GEYJ470	M.RESISTOR CH 1/10W 47	1	
R790-97	ERJ6GEYJ102	M.RESISTOR CH 1/10W 1K	8	
R798,99	ERJ6GEYJ332	M.RESISTOR CH 1/10W 3.3K	2	
R800	ERJ6GEYJ101	M.RESISTOR CH 1/10W 100	1	
R801,02	ERJ6GEYJ471	M.RESISTOR CH 1/10W 470	2	
R803	ERJ6GEYJ470	M.RESISTOR CH 1/10W 47	1	
R804,05	ERJ6GEYJ681	M.RESISTOR CH 1/10W 680	2	
R806,07	ERJ6GEYJ101	M.RESISTOR CH 1/10W 100	2	
R808	ERJ6GEYJ470	M.RESISTOR CH 1/10W 47	1	
R809	ERJ6GEYJ151	M.RESISTOR CH 1/10W 150	1	
R810,11	ERJ6GEYJ222	M.RESISTOR CH 1/10W 2.2K	2	
R812	ERJ6GEYJ470	M.RESISTOR CH 1/10W 47	1	
R813,14	ERJ6GEYJ222	M.RESISTOR CH 1/10W 2.2K	2	
R815,16	ERJ6GEYJ470	M.RESISTOR CH 1/10W 47	2	
R817-28	ERJ6GEYJ102	M.RESISTOR CH 1/10W 1K	12	
R829	ERJ6GEYJ683	M.RESISTOR CH 1/10W 68K	1	
R830,31	ERJ6GEYJ103	M.RESISTOR CH 1/10W 10K	2	
R832,33	ERJ6GEYJ150	M.RESISTOR CH 1/10W 15	2	
R834,35	ERJ6GEYJ332	M.RESISTOR CH 1/10W 3.3K	2	
R836	ERJ6GEYJ101	M.RESISTOR CH 1/10W 100	1	
R837	ERDS2TJ222	C.RESISTOR 1/4W 2.2K	1	
R838-40	ERJ6GEYJ102	M.RESISTOR CH 1/10W 1K	3	
R842	ERJ6GEYJ222	M.RESISTOR CH 1/10W 2.2K	1	
R843,44	ERJ6GEYJ471	M.RESISTOR CH 1/10W 470	2	
R845	ERJ6GEYJ470	M.RESISTOR CH 1/10W 47	1	
R846,47	ERJ6GEYJ333	M.RESISTOR CH 1/10W 33K	2	
R848,49	ERJ6GEYJ102	M.RESISTOR CH 1/10W 1K	2	
R850	ERJ6GEYJ222	M.RESISTOR CH 1/10W 2.2K	1	
R851	ERJ6GEYJ221	M.RESISTOR CH 1/10W 220	1	
R852	ERJ6GEYJ392	M.RESISTOR CH 1/10W 3.9K	1	
R853	ERJ6GEYJ470	M.RESISTOR CH 1/10W 47	1	
R854	ERJ6GEYJ471	M.RESISTOR CH 1/10W 470	1	
R855	ERJ6GEYJ152	M.RESISTOR CH 1/10W 1.5K	1	
R856,57	ERJ6GEYJ101	M.RESISTOR CH 1/10W 100	2	
R858	ERJ6GEYJ222	M.RESISTOR CH 1/10W 2.2K	1	
R859	ERJ6GEYJ102	M.RESISTOR CH 1/10W 1K	1	
R860	ERJ6GEYJ101	M.RESISTOR CH 1/10W 100	1	
R861	ERJ6GEYJ332	M.RESISTOR CH 1/10W 3.3K	1	
R862	ERJ6GEYJ223	M.RESISTOR CH 1/10W 22K	1	
R863	ERJ6GEYJ332	M.RESISTOR CH 1/10W 3.3K	1	
R864	ERJ6GEYJ472	M.RESISTOR CH 1/10W 4.7K	1	
R865	ERJ6GEYJ103	M.RESISTOR CH 1/10W 10K	1	
R866	ERJ6GEYJ683	M.RESISTOR CH 1/10W 68K	1	
R867	ERJ6GEYJ473	M.RESISTOR CH 1/10W 47K	1	
R868	ERJ6GEYJ471	M.RESISTOR CH 1/10W 470	1	
R870	ERJ6GEYJ471	M.RESISTOR CH 1/10W 470	1	
R871	ERJ6GEYJ221	M.RESISTOR CH 1/10W 220	1	
R872	ERJ6GEYJ392	M.RESISTOR CH 1/10W 3.9K	1	
R873	VRE0034E27B	M.RESISTOR CH 1/10W 1.87K	1	
R874	VRE0034E751	M.RESISTOR CH 1/10W 750	1	
R875	ERJ6GEYJ332	M.RESISTOR CH 1/10W 3.3K	1	
R876	ERJ6GEYJ152	M.RESISTOR CH 1/10W 1.5K	1	
R878	ERJ6GEYG301	M.RESISTOR CH 1/10W 300	1	
R879	ERJ6GEYG471	M.RESISTOR CH 1/10W 470	1	
R880	ERJ6GEYJ332	M.RESISTOR CH 1/10W 3.3K	1	
R881	ERJ6GEYJ101	M.RESISTOR CH 1/10W 100	1	
R882	ERJ6GEYJ151	M.RESISTOR CH 1/10W 150	1	
R883	VRE0034E26A	M.RESISTOR CH 1/10W 182	1	
R884	ERJ6GEYJ331	M.RESISTOR CH 1/10W 330	1	
R885	VRE0034E89A	M.RESISTOR CH 1/10W 825	1	

Refer to the P.C.BOARDS LIST, page 6-1-1, before using this page.

Ref.No.		Part No.	Part Name & Description	Pcs	Remarks
R886,87		ERJ6GEYJ470	M.RESISTOR CH 1/10W 47	2	
R888		ERJ6GEYJ331	M.RESISTOR CH 1/10W 330	1	
R888		ERJ6GEYJ331	M.RESISTOR CH 1/10W 330	1	
R889		ERJ6GEYJ681	M.RESISTOR CH 1/10W 680	1	
R890		ERJ6GEYJ273	M.RESISTOR CH 1/10W 27K	1	
R891		ERJ6GEYJ183	M.RESISTOR CH 1/10W 18K	1	
R892		ERJ6GEYJ221	M.RESISTOR CH 1/10W 220	1	
R893		ERJ6GEYJ273	M.RESISTOR CH 1/10W 27K	1	
R894		ERJ6GEYJ183	M.RESISTOR CH 1/10W 18K	1	
R895		ERJ6GEYJ221	M.RESISTOR CH 1/10W 220	1	
R896		ERJ6GEYG223	M.RESISTOR CH 1/10W 22K	1	
R897		ERJ6GEYJ470	M.RESISTOR CH 1/10W 47	1	
R898		VRE0034E26A	M.RESISTOR CH 1/10W 182	1	
R899		VRE0034E89A	M.RESISTOR CH 1/10W 825	1	
R900		ERJ6GEYG331	M.RESISTOR CH 1/10W 330	1	
R901		VRE0034E59A	M.RESISTOR CH 1/10W 413	1	
R902		VRE0034E102	M.RESISTOR CH 1/10W 1K	1	
R903		ERJ6GEYJ392	M.RESISTOR CH 1/10W 3.9K	1	
R904		ERJ6GEYJ470	M.RESISTOR CH 1/10W 47	1	
R905,06		ERJ6GEYJ222	M.RESISTOR CH 1/10W 2.2K	2	
R907		ERJ6GEYJ470	M.RESISTOR CH 1/10W 47	1	
R909		ERJ6GEYJ472	M.RESISTOR CH 1/10W 4.7K	1	
R910		ERJ6GEYJ473	M.RESISTOR CH 1/10W 47K	1	
R911		ERJ6GEYJ332	M.RESISTOR CH 1/10W 3.3K	1	
R912		ERJ6GEYJ471	M.RESISTOR CH 1/10W 470	1	
R913		ERJ6GEYJ102	M.RESISTOR CH 1/10W 1K	1	
R914		ERJ6GEYJ472	M.RESISTOR CH 1/10W 4.7K	1	
R915		ERJ6GEYJ222	M.RESISTOR CH 1/10W 2.2K	1	
R920		ERJ6GEYJ331	M.RESISTOR CH 1/10W 330	1	
R921,22		ERJ6GEYJ470	M.RESISTOR CH 1/10W 47	2	
R923		ERJ6GEYJ152	M.RESISTOR CH 1/10W 1.5K	1	
R924		ERJ6GEYJ222	M.RESISTOR CH 1/10W 2.2K	1	
R925,26		ERJ6GEYJ470	M.RESISTOR CH 1/10W 47	2	
R927,28		ERJ6GEYJ222	M.RESISTOR CH 1/10W 2.2K	2	
R929		ERJ6GEYJ471	M.RESISTOR CH 1/10W 470	1	
R930		ERJ6GEYJ470	M.RESISTOR CH 1/10W 47	1	
R931		ERJ6GEYJ152	M.RESISTOR CH 1/10W 1.5K	1	
R932		ERJ6GEYJ221	M.RESISTOR CH 1/10W 220	1	
R933		ERJ6GEYJ222	M.RESISTOR CH 1/10W 2.2K	1	
R934		ERJ6GEYJ682	M.RESISTOR CH 1/10W 6.8K	1	
R935		ERJ6GEYJ182	M.RESISTOR CH 1/10W 1.8K	1	
R936		ERJ6GEYJ471	M.RESISTOR CH 1/10W 470	1	
R937,38		ERJ6GEYJ332	M.RESISTOR CH 1/10W 3.3K	2	
R939		ERJ6GEYJ471	M.RESISTOR CH 1/10W 470	1	
R940		ERJ6GEYJ103	M.RESISTOR CH 1/10W 10K	1	
R941		ERJ6GEYJ683	M.RESISTOR CH 1/10W 68K	1	
R942		ERJ6GEYJ222	M.RESISTOR CH 1/10W 2.2K	1	
R943		ERJ6GEYJ273	M.RESISTOR CH 1/10W 27K	1	
R944		ERJ6GEYJ682	M.RESISTOR CH 1/10W 6.8K	1	
R945,46		ERJ6GEYK475	M.RESISTOR CH 1/10W 4.7M	2	
R947		ERJ6GEYJ272	M.RESISTOR CH 1/10W 2.7K	1	
R948		ERJ6GEYJ471	M.RESISTOR CH 1/10W 470	1	
R949		ERJ6GEYJ102	M.RESISTOR CH 1/10W 1K	1	
R950		ERJ6GEYJ472	M.RESISTOR CH 1/10W 4.7K	1	
R951		ERJ6GEYJ102	M.RESISTOR CH 1/10W 1K	1	
R952		ERJ6GEYJ472	M.RESISTOR CH 1/10W 4.7K	1	
R953,54		ERJ6GEYJ105	M.RESISTOR CH 1/10W 1M	2	
R955,56		ERJ6GEYK475	M.RESISTOR CH 1/10W 4.7M	2	
R957,58		ERJ6GEYJ472	M.RESISTOR CH 1/10W 4.7K	2	
R959		ERJ6GEYJ471	M.RESISTOR CH 1/10W 470	1	
R960		ERJ6GEYJ153	M.RESISTOR CH 1/10W 15K	1	
R961-63		ERJ6GEYJ103	M.RESISTOR CH 1/10W 10K	3	
R964		ERJ6GEYJ101	M.RESISTOR CH 1/10W 100	1	
R965		ERJ6GEYJ102	M.RESISTOR CH 1/10W 1K	1	
R966-68		ERJ6GEYJ103	M.RESISTOR CH 1/10W 10K	3	
R969,70		ERJ6GEYJ472	M.RESISTOR CH 1/10W 4.7K	2	
R971		ERJ6GEYJ223	M.RESISTOR CH 1/10W 22K	1	
R972		ERDS2TJ331	C.RESISTOR 1/4W 330	1	
R973		ERJ6GEYJ102	M.RESISTOR CH 1/10W 1K	1	
R974		ERJ6GEY0R00	M.RESISTOR CH 1/10W 0	1	
R975,76		ERJ6GEYJ470	M.RESISTOR CH 1/10W 47	2	
R977		ERJ6GEYJ682	M.RESISTOR CH 1/10W 6.8K	1	
R978,79		ERJ6GEYJ221	M.RESISTOR CH 1/10W 220	2	
R980		ERJ6GEYJ682	M.RESISTOR CH 1/10W 6.8K	1	
R981,82		ERJ6GEYJ101	M.RESISTOR CH 1/10W 100	2	

Ref.No.		Part No.	Part Name & Description	Pcs	Remarks
R983,84		ERJ6GEYJ681	M.RESISTOR CH 1/10W 680	2	
R985		ERJ6GEYJ470	M.RESISTOR CH 1/10W 47	1	
R986,87		ERJ6GEYJ331	M.RESISTOR CH 1/10W 330	2	
R989		ERJ6GEYJ472	M.RESISTOR CH 1/10W 4.7K	1	
R993		ERDS2TJ331	C.RESISTOR 1/4W 330	1	
R994		ERDS2TJ472	C.RESISTOR 1/4W 4.7K	1	
SW304		VSS0126	SWITCH	1	
SW305,06		VSS0207	SWITCH	2	
SW704		VSS0126	SWITCH	1	
TP301-04		VJR0646	TEST POINT	4	
TP306-13		VJR0646	TEST POINT	8	
TP315		VJR0646	TEST POINT	1	
TP317		VJR0646	TEST POINT	1	
TP701-10		VJR0646	TEST POINT	10	
TP712		VJR0646	TEST POINT	1	
TPG301-03		VJR0646	TEST POINT	3	
TPG701-03		VJR0646	TEST POINT	3	
VC301		ECV1ZW10X53T	V.CAPACITOR 10P	1	
VC701		ECV1ZW20X53T	V.CAPACITOR 20P	1	
VL301,02		EIR7QF016B	COIL	2	
VL303		EIR7QF015B	COIL	1	
VL701		EIR7QF016B	COIL	1	
VL702		EIR7QF015B	COIL	1	
VR301		VRV0109B501	V.RESISTOR 500	1	
VR302		VRV0109B102	V.RESISTOR 1K	1	
VR303		VRV0109B501	V.RESISTOR 500	1	
VR304		VRV0109B102	V.RESISTOR 1K	1	
VR309		VRV0109B101	V.RESISTOR 100	1	
VR310		VRV0109B502	V.RESISTOR 5K	1	
VR311		VRV0109B501	V.RESISTOR 500	1	
VR312		VRV0064B104	V.RESISTOR 100K	1	
VR315,16		VRV0064B502	V.RESISTOR 5K	2	
VR317		VRV0109B501	V.RESISTOR 500	1	
VR318		VRV0109B203	V.RESISTOR 20K	1	
VR319,20		VRV0109B102	V.RESISTOR 1K	2	
VR321		VRV0109B203	V.RESISTOR 20K	1	
VR322		VRV0109B102	V.RESISTOR 1K	1	
VR323		VRV0109B203	V.RESISTOR 20K	1	
VR324		VRV0109B102	V.RESISTOR 1K	1	
VR325		VRV0109B202	V.RESISTOR 2K	1	
VR326		VRV0109B102	V.RESISTOR 1K	1	
VR327		VRV0064B203	V.RESISTOR 20K	1	
VR328		VRV0109B203	V.RESISTOR 20K	1	
VR329		VRV0112B504	V.RESISTOR 100K	1	
VR331		VRV0109B103	V.RESISTOR 10K	1	
VR701,02		VRV0109B501	V.RESISTOR 500	2	
VR712,13		VRV0064B502	V.RESISTOR 5K	2	
VR714		VRV0109B501	V.RESISTOR 500	1	
VR715		VRV0109B203	V.RESISTOR 20K	1	
VR716,17		VRV0109B102	V.RESISTOR 1K	2	
VR718		VRV0109B203	V.RESISTOR 20K	1	
VR719		VRV0109B102	V.RESISTOR 1K	1	
VR720		VRV0109B203	V.RESISTOR 20K	1	
VR721		VRV0109B102	V.RESISTOR 1K	1	
VR722		VRV0109B202	V.RESISTOR 2K	1	
VR723		VRV0109B102	V.RESISTOR 1K	1	
VR724		VRV0064B203	V.RESISTOR 20K	1	
VR725		VRV0109B504	V.RESISTOR 500K	1	
VR726		VRV0109B103	V.RESISTOR 10K	1	

Refer to the P.C.BOARDS LIST, page 6-1-1, before using this page.

Ref.No.		Part No.	Part Name & Description	Pcs	Remarks
			MISCELLANEOUS		
		VML2143	CARD PULLER	1	
		VML2144	CARD PULLER	1	
		VMS4174	PIN	6	
		VMZ1547	BARRIER	1	
		VSC3056	SHIELD CASE	1	
		VXA3966	P.C.B. SHIELD PLATE	1	
		XNG26E	NUT	4	
		XYNV3+K6FR	SCREW	6	
		XYN26+C12	SCREW	4	

Refer to the P.C.BOARDS LIST, page 6-1-1, before using this page.

Ref.No.		Part No.	Part Name & Description	Pcs	Remarks
	■	VEP83099A	P.C.BOARD W/COMPONENT		FOR AU-65-P
			W4 DEC & CTCM		
			CAPACITORS		
C1		ECEA1HN010S	E.CAPACITOR 50V 1U	1	
C2,C3		ECEA0JN101S	E.CAPACITOR 6.3V 100U	2	
C4,C5		ECUM1H050DCN	C.CAPACITOR CH 50V 50P	2	
C6		ECUM1H103KBN	C.CAPACITOR CH 50V 0.01U	1	
C7		ECEA1CU470	E.CAPACITOR 16V 47U	1	
C8		ECUM1H103KBN	C.CAPACITOR CH 50V 0.01U	1	
C9		ECEA1CU470	E.CAPACITOR 16V 47U	1	
C10		ECUM1H103KBN	C.CAPACITOR CH 50V 0.01U	1	
C11		ECEA1CN101S	E.CAPACITOR 16V 100U	1	
C12		ECUM1H103KBN	C.CAPACITOR CH 50V 0.01U	1	
C13		ECEA1CU470	E.CAPACITOR 16V 47U	1	
C14,15		ECUM1H103KBN	C.CAPACITOR CH 50V 0.01U	2	
C16		ECUM1H820JCN	C.CAPACITOR CH 50V 82P	1	
C17		ECUM1H103KBN	C.CAPACITOR CH 50V 0.01U	1	
C18		ECEA1CU470	E.CAPACITOR 16V 47U	1	
C19		ECUM1H180JCN	C.CAPACITOR CH 50V 18P	1	
C20		ECUM1H820JCN	C.CAPACITOR CH 50V 82P	1	
C21,22		ECUM1H104KBM	C.CAPACITOR CH 50V 0.1U	2	
C23		ECEA1HN010S	E.CAPACITOR 50V 1U	1	
C24		ECUM1H101JCN	C.CAPACITOR CH 50V 100P	1	
C25		ECUM1H103KBN	C.CAPACITOR CH 50V 0.01U	1	
C26		ECEA1CU470	E.CAPACITOR 16V 47U	1	
C27		ECUM1H103KBN	C.CAPACITOR CH 50V 0.01U	1	
C28		ECEA1CU470	E.CAPACITOR 16V 47U	1	
C29		ECUM1H680JCN	C.CAPACITOR CH 50V 68P	1	
C30-36		ECUM1H103KBN	C.CAPACITOR CH 50V 0.01U	7	
C38		ECUM1H103KBN	C.CAPACITOR CH 50V 0.01U	1	
C40		ECUM1H103KBN	C.CAPACITOR CH 50V 0.01U	1	
C41		ECUM1H680JCN	C.CAPACITOR CH 50V 68P	1	
C42,43		ECUM1H103KBN	C.CAPACITOR CH 50V 0.01U	2	
C44		ECEA1CU470	E.CAPACITOR 16V 47U	1	
C45		ECUM1H103KBN	C.CAPACITOR CH 50V 0.01U	1	
C46		ECEA1CU470	E.CAPACITOR 16V 47U	1	
C48		ECUM1H330JCN	C.CAPACITOR CH 50V 33P	1	
C49		ECEA1AU220	E.CAPACITOR 10V 22U	1	
C50,51		ECUM1H103KBN	C.CAPACITOR CH 50V 0.01U	2	
C52		ECEA1HU010	E.CAPACITOR 50V 1U	1	
C53,54		ECUM1H103KBN	C.CAPACITOR CH 50V 0.01U	2	
C55		ECEA1CU470	E.CAPACITOR 16V 47U	1	
C56		ECUM1H103KBN	C.CAPACITOR CH 50V 0.01U	1	
C57		ECEA1CU470	E.CAPACITOR 16V 47U	1	
C58		ECUM1H330JCN	C.CAPACITOR CH 50V 33P	1	
C59		ECEA1AU330	E.CAPACITOR 10V 33U	1	
C60		ECUM1H330JCN	C.CAPACITOR CH 50V 33P	1	
C61		ECEA1AU330	E.CAPACITOR 10V 33U	1	
C62		ECUM1H102JCN	C.CAPACITOR CH 50V 1000P	1	
C63		ECEA1AU330	E.CAPACITOR 10V 33U	1	
C64		ECUM1H220JCN	C.CAPACITOR CH 50V 22P	1	
C65		ECUM1H100DCN	C.CAPACITOR CH 50V 10P	1	
C66		ECEA1CU221	E.CAPACITOR 16V 220U	1	
C67		ECUM1H103KBN	C.CAPACITOR CH 50V 0.01U	1	
C68		ECEA1CU470	E.CAPACITOR 16V 47U	1	
C69		ECUM1H103KBN	C.CAPACITOR CH 50V 0.01U	1	
C70		ECEA1CU470	E.CAPACITOR 16V 47U	1	
C72		ECUM1H560JCN	C.CAPACITOR CH 50V 56P	1	
C73		ECUM1H680JCN	C.CAPACITOR CH 50V 68P	1	
C74		ECUM1H220JCN	C.CAPACITOR CH 50V 22P	1	
C75		ECUM1H560JCN	C.CAPACITOR CH 50V 56P	1	
C76		ECUM1H103KBN	C.CAPACITOR CH 50V 0.01U	1	
C77		ECUM1H100DCN	C.CAPACITOR CH 50V 10P	1	
C78,79		ECUM1H103KBN	C.CAPACITOR CH 50V 0.01U	2	
C80		ECEA1HU010	E.CAPACITOR 50V 1U	1	
C81		ECUM1H103KBN	C.CAPACITOR CH 50V 0.01U	1	
C82		ECUM1H330JCN	C.CAPACITOR CH 50V 33P	1	

Ref.No.		Part No.	Part Name & Description	Pcs	Remarks
C83		ECEA1AU330	E.CAPACITOR 10V 33U	1	
C84		ECUM1H330JCN	C.CAPACITOR CH 50V 33P	1	
C85		ECEA1AU330	E.CAPACITOR 10V 33U	1	
C86		ECUM1H102JCN	C.CAPACITOR CH 50V 1000P	1	
C87		ECUM1H220JCN	C.CAPACITOR CH 50V 22P	1	
C88		ECUM1H100DCN	C.CAPACITOR CH 50V 10P	1	
C89		ECEA1CU221	E.CAPACITOR 16V 220U	1	
C90		ECUM1H103KBN	C.CAPACITOR CH 50V 0.01U	1	
C91		ECUM1H470JCN	C.CAPACITOR CH 50V 47P	1	
C92		ECUM1H103KBN	C.CAPACITOR CH 50V 0.01U	1	
C93		ECUM1H470JCN	C.CAPACITOR CH 50V 47P	1	
C94		ECUM1H080DCN	C.CAPACITOR CH 50V 80P	1	
C95		ECUM1H560JCN	C.CAPACITOR CH 50V 56P	1	
C96		ECUM1H680JCN	C.CAPACITOR CH 50V 68P	1	
C97-99		ECEA1HNR47S	E.CAPACITOR 50V 0.47U	3	
C100-02		ECUM1H390JCN	C.CAPACITOR CH 50V 39P	3	
C103-05		ECUM1H104KBM	C.CAPACITOR CH 50V 0.1U	3	
C107		ECEA1EN4R7S	E.CAPACITOR 25V 4.7U	1	
C109		ECEA1EN4R7S	E.CAPACITOR 25V 4.7U	1	
C110		ECUM1H103KBN	C.CAPACITOR CH 50V 0.01U	1	
C112		ECUM1H103KBN	C.CAPACITOR CH 50V 0.01U	1	
C113		ECEA1CU470	E.CAPACITOR 16V 47U	1	
C114,15		ECUM1H470JCN	C.CAPACITOR CH 50V 47P	2	
C116		ECUM1H103KBN	C.CAPACITOR CH 50V 0.01U	1	
C118		ECUM1H103KBN	C.CAPACITOR CH 50V 0.01U	1	
C120		ECUM1H101JCN	C.CAPACITOR CH 50V 100P	1	
C121		ECUM1H103KBN	C.CAPACITOR CH 50V 0.01U	1	
C122		ECEA1CU470	E.CAPACITOR 16V 47U	1	
C123		ECUM1H820JCN	C.CAPACITOR CH 50V 82P	1	
C124		ECUM1H103KBN	C.CAPACITOR CH 50V 0.01U	1	
C125		ECUM1H104KBM	C.CAPACITOR CH 50V 0.1U	1	
C140		ECUM1H680JCN	C.CAPACITOR CH 50V 68P	1	
C141,42		ECUM1H103KBN	C.CAPACITOR CH 50V 0.01U	2	
C161		ECUM1E104ZFN	C.CAPACITOR CH 25V 0.1U	1	
C164		ECUM1H103KBN	C.CAPACITOR CH 50V 0.01U	1	
C165		ECEA1CU100	E.CAPACITOR 16V 10U	1	
C166		ECUM1H103KBN	C.CAPACITOR CH 50V 0.01U	1	
C167		ECEA1CU100	E.CAPACITOR 16V 10U	1	
C168		ECUM1E104ZFN	C.CAPACITOR CH 25V 0.1U	1	
C169		ECUM1H103KBN	C.CAPACITOR CH 50V 0.01U	1	
C170		ECEA1CU100	E.CAPACITOR 16V 10U	1	
C171		ECUM1E104ZFN	C.CAPACITOR CH 25V 0.1U	1	
C172		ECUM1H103KBN	C.CAPACITOR CH 50V 0.01U	1	
C173		ECEA1CU100	E.CAPACITOR 16V 10U	1	
C174		ECUM1E104ZFN	C.CAPACITOR CH 25V 0.1U	1	
C175		ECUM1H103KBN	C.CAPACITOR CH 50V 0.01U	1	
C176		ECEA1CU100	E.CAPACITOR 16V 10U	1	
C183		ECUM1H103KBN	C.CAPACITOR CH 50V 0.01U	1	
C184		ECUM1H101JCN	C.CAPACITOR CH 50V 100P	1	
C185		ECEA1CU470	E.CAPACITOR 16V 47U	1	
C195		ECUM1H101JCN	C.CAPACITOR CH 50V 100P	1	
C201,02		ECUM1H103KBN	C.CAPACITOR CH 50V 0.01U	2	
C203		ECEA1CU470	E.CAPACITOR 16V 47U	1	
C204		ECUM1H103KBN	C.CAPACITOR CH 50V 0.01U	1	
C205		ECEA1CU470	E.CAPACITOR 16V 47U	1	
C206		ECQM1H104JF	P.CAPACITOR 50V 0.1U	1	
C207		ECQM1H103JF	P.CAPACITOR 50V 0.01U	1	
C208		ECQM1H104JF	P.CAPACITOR 50V 0.1U	1	
C209		ECUM1H104KBM	C.CAPACITOR CH 50V 0.1U	1	
C210-12		ECUM1H103KBN	C.CAPACITOR CH 50V 0.01U	3	
C218		ECUM1H471JCN	C.CAPACITOR CH 50V 470P	1	
C219		ECUM1H103KBN	C.CAPACITOR CH 50V 0.01U	1	
C220		ECEA1CU470	E.CAPACITOR 16V 47U	1	
C221		ECUM1H103KBN	C.CAPACITOR CH 50V 0.01U	1	
C222		ECEA1CU470	E.CAPACITOR 16V 47U	1	
C223		ECUM1H020CCN	C.CAPACITOR CH 50V 2P	1	
C224,25		ECUM1H470JCN	C.CAPACITOR CH 50V 47P	2	
C226		ECUM1H560JCN	C.CAPACITOR CH 50V 56P	1	
C227-31		ECUM1H103KBN	C.CAPACITOR CH 50V 0.01U	5	
C232		ECUM1H331JCN	C.CAPACITOR CH 50V 330P	1	
C233-35		ECUM1H104KBM	C.CAPACITOR CH 50V 0.1U	3	
C238		ECUM1H103KBN	C.CAPACITOR CH 50V 0.01U	1	
C240		ECUM1H103KBN	C.CAPACITOR CH 50V 0.01U	1	
C241		ECUM1H104KBM	C.CAPACITOR CH 50V 0.1U	1	
C244		ECEA1CN221S	E.CAPACITOR 16V 220U	1	

Refer to the P.C.BOARDS LIST, page 6-1-1, before using this page.

Ref.No.	Part No.	Part Name & Description	Pcs	Remarks
C245	ECUM1H080DCN	C.CAPACITOR CH 50V 80P	1	
C246	ECUM1H020CCN	C.CAPACITOR CH 50V 2P	1	
C247	ECUM1H103KBN	C.CAPACITOR CH 50V 0.01U	1	
C248	ECEA1CU470	E.CAPACITOR 16V 47U	1	
C249	ECUM1H103KBN	C.CAPACITOR CH 50V 0.01U	1	
C250	ECEA1CU470	E.CAPACITOR 16V 47U	1	
C251	ECUM1H103KBN	C.CAPACITOR CH 50V 0.01U	1	
C252	ECEA1CU470	E.CAPACITOR 16V 47U	1	
C273	ECUM1H103KBN	C.CAPACITOR CH 50V 0.01U	1	
C275,76	ECUM1H103KBN	C.CAPACITOR CH 50V 0.01U	2	
C280	ECUM1H103KBN	C.CAPACITOR CH 50V 0.01U	1	
C284	ECUM1H103KBN	C.CAPACITOR CH 50V 0.01U	1	
C286	ECEA1CU470	E.CAPACITOR 16V 47U	1	
C287	ECUM1H103KBN	C.CAPACITOR CH 50V 0.01U	1	
C288	ECUM1H220JCN	C.CAPACITOR CH 50V 22P	1	
C289	ECUM1H060DCN	C.CAPACITOR CH 50V 6P	1	
C290	ECUM1H820JCN	C.CAPACITOR CH 50V 82P	1	
C291	ECUM1H080DCN	C.CAPACITOR CH 50V 80P	1	
C292	ECUM1H470JCN	C.CAPACITOR CH 50V 47P	1	
C293	ECEA1CU470	E.CAPACITOR 16V 47U	1	
C294	ECEA0JU101	E.CAPACITOR 6.3V 100U	1	
C295	ECEA0JN101S	E.CAPACITOR 6.3V 100U	1	
C296	ECUM1H220JCN	C.CAPACITOR CH 50V 22P	1	
C297	ECUM1H060DCN	C.CAPACITOR CH 50V 6P	1	
C298	ECUM1H820JCN	C.CAPACITOR CH 50V 82P	1	
C299	ECUM1H080DCN	C.CAPACITOR CH 50V 80P	1	
C300	ECUM1H470JCN	C.CAPACITOR CH 50V 47P	1	
C301	ECEA1CU470	E.CAPACITOR 16V 47U	1	
C302	ECEA0JU101	E.CAPACITOR 6.3V 100U	1	
C303	ECEA0JN101S	E.CAPACITOR 6.3V 100U	1	
C304	ECEA1CU470	E.CAPACITOR 16V 47U	1	
C305	ECUM1H103KBN	C.CAPACITOR CH 50V 0.01U	1	
C306	ECEA1CU470	E.CAPACITOR 16V 47U	1	
C307,08	ECUM1H103KBN	C.CAPACITOR CH 50V 0.01U	2	
C310	ECUM1H103KBN	C.CAPACITOR CH 50V 0.01U	1	
C311	ECEA1HNR47S	E.CAPACITOR 50V 0.47U	1	
C312	ECUM1C104KBN	C.CAPACITOR CH 16V 0.1U	1	
C313	ECUM1H103KBN	C.CAPACITOR CH 50V 0.01U	1	
C316-18	ECUM1H103KBN	C.CAPACITOR CH 50V 0.01U	3	
C319	ECUM1H220JCN	C.CAPACITOR CH 50V 22P	1	
C327	ECEA0JN101S	E.CAPACITOR 6.3V 100U	1	
C328	ECEA1CU470	E.CAPACITOR 16V 47U	1	
C329	ECUM1H103KBN	C.CAPACITOR CH 50V 0.01U	1	
C401	ECEA1CU470	E.CAPACITOR 16V 47U	1	
C402,03	ECUM1H103KBN	C.CAPACITOR CH 50V 0.01U	2	
C404	ECUM1H102JCN	C.CAPACITOR CH 50V 1000P	1	
C405	ECUM1H103KBN	C.CAPACITOR CH 50V 0.01U	1	
C406	ECUM1H121JCN	C.CAPACITOR CH 50V 120P	1	
C407	ECUM1H560JCN	C.CAPACITOR CH 50V 56P	1	
C408	ECUM1H103KBN	C.CAPACITOR CH 50V 0.01U	1	
C409	ECUM1H121JCN	C.CAPACITOR CH 50V 120P	1	
C410	ECUM1H103KBN	C.CAPACITOR CH 50V 0.01U	1	
C411	ECUM1H121JCN	C.CAPACITOR CH 50V 120P	1	
C412	ECUM1H080DCN	C.CAPACITOR CH 50V 80P	1	
C413	ECUM1H390JCN	C.CAPACITOR CH 50V 39P	1	
C501	ECUM1H103KBN	C.CAPACITOR CH 50V 0.01U	1	
C502	ECEA1CU470	E.CAPACITOR 16V 47U	1	
C503	ECUM1H103KBN	C.CAPACITOR CH 50V 0.01U	1	
C504	ECEA1CU470	E.CAPACITOR 16V 47U	1	
C505	ECUM1H330JCN	C.CAPACITOR CH 50V 33P	1	
C509	ECUM1H104KBM	C.CAPACITOR CH 50V 0.1U	1	
C510	ECEA1CU470	E.CAPACITOR 16V 47U	1	
C511	ECUM1H104KBM	C.CAPACITOR CH 50V 0.1U	1	
C513	ECUM1H103KBN	C.CAPACITOR CH 50V 0.01U	1	
C517	ECUM1H330JCN	C.CAPACITOR CH 50V 33P	1	
C520	ECUM1H103KBN	C.CAPACITOR CH 50V 0.01U	1	
C521	ECUM1H104KBM	C.CAPACITOR CH 50V 0.1U	1	
C522	ECEA1CU470	E.CAPACITOR 16V 47U	1	
C523	ECUM1H104KBM	C.CAPACITOR CH 50V 0.1U	1	
C524	ECUM1H103KBN	C.CAPACITOR CH 50V 0.01U	1	
C525	ECEA1CU470	E.CAPACITOR 16V 47U	1	
C526	ECUM1H680JCN	C.CAPACITOR CH 50V 68P	1	
C527	ECUM1H180JCN	C.CAPACITOR CH 50V 18P	1	
C528	ECUM1H104KBM	C.CAPACITOR CH 50V 0.1U	1	
C529	ECUM1H680JCN	C.CAPACITOR CH 50V 68P	1	

Ref.No.	Part No.	Part Name & Description	Pcs	Remarks
C530	ECUM1H060DCN	C.CAPACITOR CH 50V 6P	1	
C531	ECUM1H103KBN	C.CAPACITOR CH 50V 0.01U	1	
C532	ECEA1CU470	E.CAPACITOR 16V 47U	1	
C533,34	ECUM1H390JCN	C.CAPACITOR CH 50V 39P	2	
C535	ECUM1H270JCN	C.CAPACITOR CH 50V 27P	1	
C536	ECUM1H470JCN	C.CAPACITOR CH 50V 47P	1	
C537	ECUM1H104KBM	C.CAPACITOR CH 50V 0.1U	1	
C540	ECUM1H103KBN	C.CAPACITOR CH 50V 0.01U	1	
C541	ECEA1CU470	E.CAPACITOR 16V 47U	1	
C542	ECUM1H103KBN	C.CAPACITOR CH 50V 0.01U	1	
C543	ECEA1CU470	E.CAPACITOR 16V 47U	1	
C544	ECUM1H080DCN	C.CAPACITOR CH 50V 80P	1	
C545	ECEA1CU470	E.CAPACITOR 16V 47U	1	
C548	ECUM1H104KBM	C.CAPACITOR CH 50V 0.1U	1	
C550,51	ECUM1H103KBN	C.CAPACITOR CH 50V 0.01U	2	
C552	ECUM1H820JCN	C.CAPACITOR CH 50V 82P	1	
C553	ECUM1H390JCN	C.CAPACITOR CH 50V 39P	1	
C554	ECUM1H181JCN	C.CAPACITOR CH 50V 180P	1	
C555-57	ECUM1H104KBM	C.CAPACITOR CH 50V 0.1U	3	
C558	ECEA1HN010S	E.CAPACITOR 50V 1U	1	
C559-61	ECUM1H103KBN	C.CAPACITOR CH 50V 0.01U	3	
C562	ECEA1CU100	E.CAPACITOR 16V 10U	1	
C563	ECUM1E104ZFN	C.CAPACITOR CH 25V 0.1U	1	
C564	ECUM1H103KBN	C.CAPACITOR CH 50V 0.01U	1	
C565	ECEA1CU100	E.CAPACITOR 16V 10U	1	
C566	ECUM1E104ZFN	C.CAPACITOR CH 25V 0.1U	1	
C567	ECUM1H103KBN	C.CAPACITOR CH 50V 0.01U	1	
C568	ECEA1CU100	E.CAPACITOR 16V 10U	1	
C569	ECUM1E104ZFN	C.CAPACITOR CH 25V 0.1U	1	
C570	ECUM1H103KBN	C.CAPACITOR CH 50V 0.01U	1	
C571	ECEA1CU100	E.CAPACITOR 16V 10U	1	
C572	ECUM1E104ZFN	C.CAPACITOR CH 25V 0.1U	1	
C573	ECUM1H103KBN	C.CAPACITOR CH 50V 0.01U	1	
C574	ECEA1CU100	E.CAPACITOR 16V 10U	1	
C601-04	ECUM1H222KBN	C.CAPACITOR CH 50V 2200P	4	
C605	ECEA1AKG330	E.CAPACITOR 10V 33U	1	
C606,07	ECUM1H222KBN	C.CAPACITOR CH 50V 2200P	2	
C608	ECEA1AKG330	E.CAPACITOR 10V 33U	1	
C609-14	ECUM1H222KBN	C.CAPACITOR CH 50V 2200P	6	
C615	ECEA1AKG330	E.CAPACITOR 10V 33U	1	
C616	ECUM1H222KBN	C.CAPACITOR CH 50V 2200P	1	
C617	ECEA1AKG330	E.CAPACITOR 10V 33U	1	
C618-21	ECUM1H222KBN	C.CAPACITOR CH 50V 2200P	4	
C622	ECEA1AKG330	E.CAPACITOR 10V 33U	1	
C623,24	ECUM1H222KBN	C.CAPACITOR CH 50V 2200P	2	
C626-31	ECUM1H222KBN	C.CAPACITOR CH 50V 2200P	6	
C633	ECUM1H222KBN	C.CAPACITOR CH 50V 2200P	1	
C634	ECEA1AKG330	E.CAPACITOR 10V 33U	1	
C635-38	ECUM1E104ZFN	C.CAPACITOR CH 25V 0.1U	4	
C639	ECUM1H103KBN	C.CAPACITOR CH 50V 0.01U	1	
C640	ECEA0JU101	E.CAPACITOR 6.3V 100U	1	
C641,42	ECUM1E104ZFN	C.CAPACITOR CH 25V 0.1U	2	
C643	ECEA0JU330	E.CAPACITOR 6.3V 33U	1	
C645	ECUM1H103KBN	C.CAPACITOR CH 50V 0.01U	1	
C646	ECEA0JU330	E.CAPACITOR 6.3V 33U	1	
C647	ECUM1E104ZFN	C.CAPACITOR CH 25V 0.1U	1	
C648	ECEA1HU2R2	E.CAPACITOR 50V 2.2U	1	
C649	ECUM1H103KBN	C.CAPACITOR CH 50V 0.01U	1	
C650	ECEA1CKG470	E.CAPACITOR 16V 47U	1	
C651-53	ECUM1H103KBN	C.CAPACITOR CH 50V 0.01U	3	
C655	ECUM1E104ZFN	C.CAPACITOR CH 25V 0.1U	1	
C657	ECEA1CU101	E.CAPACITOR 16V 100U	1	
C658	ECUM1H050DCN	C.CAPACITOR CH 50V 50P	1	
C659	ECUM1H103KBN	C.CAPACITOR CH 50V 0.01U	1	
C660	ECEA1CU470	E.CAPACITOR 16V 47U	1	
C661	ECUM1H103KBN	C.CAPACITOR CH 50V 0.01U	1	
C662	ECEA1CU470	E.CAPACITOR 16V 47U	1	
C663	ECUM1H180JCN	C.CAPACITOR CH 50V 18P	1	
C664	ECUM1H151JCN	C.CAPACITOR CH 50V 150P	1	
C665	ECUM1H680JCN	C.CAPACITOR CH 50V 68P	1	
C666,67	ECEA1CU470	E.CAPACITOR 16V 47U	2	
C668	ECEA1CU101	E.CAPACITOR 16V 100U	1	
C679	ECUM1H270JCN	C.CAPACITOR CH 50V 27P	1	
C680-83	ECUM1H222KBN	C.CAPACITOR CH 50V 2200P	4	
C701	ECUM1H470JCN	C.CAPACITOR CH 50V 47P	1	

Refer to the P.C.BOARDS LIST, page 6-1-1, before using this page.

Ref.No.		Part No.	Part Name & Description	Pcs	Remarks
C702		ECUM1H103KBN	C. CAPACITOR CH 50V 0.01U	1	
C703		ECEA1CU470	E. CAPACITOR 16V 47U	1	
C704		ECUM1H331JCN	C. CAPACITOR CH 50V 330P	1	
C708		ECUM1H103KBN	C. CAPACITOR CH 50V 0.01U	1	
C709		ECEA1CU470	E. CAPACITOR 16V 47U	1	
C710		ECUM1H103KBN	C. CAPACITOR CH 50V 0.01U	1	
C711		ECUM1H102JCN	C. CAPACITOR CH 50V 1000P	1	
C712		ECUM1H820JCN	C. CAPACITOR CH 50V 82P	1	
C713,14		ECUM1H103KBN	C. CAPACITOR CH 50V 0.01U	2	
C715		ECEA1CU470	E. CAPACITOR 16V 47U	1	
C716		ECUM1H103KBN	C. CAPACITOR CH 50V 0.01U	1	
C717		ECUM1H331JCN	C. CAPACITOR CH 50V 330P	1	
C718-20		ECUM1H103KBN	C. CAPACITOR CH 50V 0.01U	3	
C721		ECQM1H122JF	P. CAPACITOR 50V 1200P	1	
C722-24		ECUM1H103KBN	C. CAPACITOR CH 50V 0.01U	3	
C725		ECEA1HN2R2S	E. CAPACITOR 50V 2.2U	1	
C726		ECEA1HNR47S	E. CAPACITOR 50V 0.47U	1	
C727		ECEA1HN010S	E. CAPACITOR 50V 1U	1	
C728		ECEA1HN2R2S	E. CAPACITOR 50V 2.2U	1	
C729		ECUM1H680JCN	C. CAPACITOR CH 50V 68P	1	
C730		ECUM1H103KBN	C. CAPACITOR CH 50V 0.01U	1	
C731		ECUM1H070DCN	C. CAPACITOR CH 50V 7P	1	
C732,33		ECUM1H103KBN	C. CAPACITOR CH 50V 0.01U	2	
C734		ECUM1H680JCN	C. CAPACITOR CH 50V 68P	1	
C735		ECUM1H221JCN	C. CAPACITOR CH 50V 220P	1	
C736		ECUM1H101JCN	C. CAPACITOR CH 50V 100P	1	
C737,38		ECEA1CU100	E. CAPACITOR 16V 10U	2	
C739		ECUM1H030DCN	C. CAPACITOR CH 50V 3P	1	
C740		ECUM1H103KBN	C. CAPACITOR CH 50V 0.01U	1	
C743,44		ECUM1H103KBN	C. CAPACITOR CH 50V 0.01U	2	
C745,46		ECUM1H102JCN	C. CAPACITOR CH 50V 1000P	2	
C749		ECUM1H103KBN	C. CAPACITOR CH 50V 0.01U	1	
C750		ECUM1H390JCN	C. CAPACITOR CH 50V 39P	1	
C751		ECEA0JU220	E. CAPACITOR 6.3V 22U	1	
C752		ECUM1H103KBN	C. CAPACITOR CH 50V 0.01U	1	
C753		ECUM1H221JCN	C. CAPACITOR CH 50V 220P	1	
C761		ECUM1H220JCN	C. CAPACITOR CH 50V 22P	1	
C762		ECUM1H050DCN	C. CAPACITOR CH 50V 50P	1	
C763,64		ECUM1H560JCN	C. CAPACITOR CH 50V 56P	2	
D1		MA151WK	DIODE	1	
D2		MA151K	DIODE	1	
D3,D4		MA151WK	DIODE	2	
D5		MA151K	DIODE	1	
D7		MA151WK	DIODE	1	
D8		MA151WA	DIODE	1	
D9		MA151K	DIODE	1	
D201,02		MA335R	DIODE	2	
D203,04		MA704	DIODE	2	
D205		MA151K	DIODE	1	
D206		MA151WA	DIODE	1	
D207		MA151K	DIODE	1	
D501		MA151K	DIODE	1	
D502		MA151WK	DIODE	1	
D601,02		MA704	DIODE	2	
D603		1S250	DIODE	1	
D701		MA151K	DIODE	1	
D702		MA704	DIODE	1	
D703		MA151K	DIODE	1	
D704,05		MA153	DIODE	2	
D706,07		MA335R	DIODE	2	
D708		MA151WA	DIODE	1	
D709		MA151WK	DIODE	1	
D710,11		MA151WA	DIODE	2	
D712		MA151K	DIODE	1	
DL1,L2		VLD0152	DELAY LINE	2	
DL3		VLD0149	DELAY LINE	1	
DL4		VLD0082	DELAY LINE	1	
DL201		VLD0082	DELAY LINE	1	

Ref.No.		Part No.	Part Name & Description	Pcs	Remarks
FL1-L4		VLF0576	FILTER	4	
FL201,02		VLF0576	FILTER	2	
FL401		VLF0576	FILTER	1	
FL501,02		VLF0380	FILTER	2	
FL601-04		VLF0576	FILTER	4	
FL605		VLF0754	FILTER	1	
IC1		NJM4558M	IC	1	
IC2		VCR0133	IC	1	
IC3		UPD4053BG	IC	1	
IC4		AN91A12S	IC	1	
IC5		CX22013	IC	1	
IC6		NJM1496M	IC	1	
IC7,C8		NJM592M8	IC	2	
IC9		TL082CPS	IC	1	
IC10		NJM2233BMA	IC	1	
IC11		AN78M09	IC	1	
IC12		AN78L07	IC	1	
IC13		AN78N05	IC	1	
IC14		AN79N09	IC	1	
IC15		AN79M05F	IC	1	
IC18		SN74LS221NS	IC	1	
IC201		UPD4053BG	IC	1	
IC205		AN612	IC	1	
IC206		MC74HC4053F	IC	1	
IC207		TL082CPS	IC	1	
IC209		UPD4053BG	IC	1	
IC210		NE5539D	IC	1	
IC211,12		UPD4053BG	IC	2	
IC214		AN6041	IC	1	
IC215,16		UPD4053BG	IC	2	
IC217		TL082CPS	IC	1	
IC218		UPD4053BG	IC	1	
IC220		TL082CPS	IC	1	
IC224		LM311M	IC	1	
IC401		TC74HC221AF	IC	1	
IC402		SN74LS221NS	IC	1	
IC403		UPD65013BC16	IC	1	
IC404		MC74HC04AF	IC	1	
IC501		TL082CPS	IC	1	
IC503		MC74HC4053F	IC	1	
IC505		AN91A12S	IC	1	
IC506		AN78N09	IC	1	
IC507		AN78N05	IC	1	
IC508		AN79N09	IC	1	
IC509		AN79N05	IC	1	
IC510		UPD4053BG	IC	1	
IC601,02		HA19211BNT	IC	2	
IC603,04		UPD41101C-1	IC	2	
IC605		MC74HC574F	IC	1	(R)
IC606		HA19510	IC	1	
IC607		RC3415M	IC	1	
IC609		AN78L05	IC	1	
IC610		NJM2233BMA	IC	1	
IC703		SN74LS221NS	IC	1	
IC704		MC74HC157AF	IC	1	
IC705		MC74HC74AF	IC	1	
IC706		TL082CPS	IC	1	
IC707		MC74HC4053F	IC	1	
IC708		TL084CNS	IC	1	
IC709		MC74HC00AF	IC	1	
IC710		SN74LS221NS	IC	1	
IC711		MC74HC04AF	IC	1	
IC712		MC74HC14AF	IC	1	
IC713		UPD65013FC25	IC	1	
IC714		MC74HC163F	IC	1	
L1-L6		VLQEL05F101K	COIL 100UH	6	
L10,11		VLQEL05F101K	COIL 100UH	2	

Refer to the P.C.BOARDS LIST, page 6-1-1, before using this page.

Ref.No.	Part No.	Part Name & Description	Pcs	Remarks
L13	VLQEL05S1R0J	COIL 1UH	1	
L15	VLQEL05F101K	COIL 100UH	1	
L18	VLQEL05F101K	COIL 100UH	1	
L19	VLQEL05S221J	COIL 220UH	1	
L20	VLQEL05S101J	COIL 100UH	1	
L21	VLQEL05S220J	COIL 22UH	1	
L23	VLQEL05S1R5J	COIL 1.5UH	1	
L24	VLQEL05S220J	COIL 22UH	1	
L25-28	VLQEL05S470J	COIL 47UH	4	
L29	VLQEL05S4R7J	COIL 4.7UH	1	
L201,02	VLQEL05F101K	COIL 100UH	2	
L204-06	VLQEL05F101K	COIL 100UH	3	
L208,09	VLQEL05F101K	COIL 100UH	2	
L212	VLQEL05F101K	COIL 100UH	1	
L214	VLQEL05S180J	COIL 18UH	1	
L215	VLQEL05S4R7J	COIL 4.7UH	1	
L216	VLQEL05S181J	COIL 180UH	1	
L220,21	VLQEL05S680J	COIL 68UH	2	
L401	VLQEL05S470J	COIL 47UH	1	
L501,02	VLQEL05F101K	COIL 100UH	2	
L505	VLQEL05F101K	COIL 100UH	1	
L506	VLQEL05S680J	COIL 68UH	1	
L507	VLQEL05F101K	COIL 100UH	1	
L508	VLQEL05S680J	COIL 68UH	1	
L509,10	VLQEL05F101K	COIL 100UH	2	
L513	VLQEL05S471J	COIL 470UH	1	
L601-03	VLP0017	COIL	3	
L604	VLQEL05F221K	COIL 200UH	1	
L606,07	VLQEL05F101K	COIL 100UH	2	
L608	VLQEL05S560J	COIL 56UH	1	
L701	VLQEL05F101K	COIL 100UH	1	
L703,04	VLQEL05F101K	COIL 100UH	2	
L705	VLQEL05S3R3J	COIL 3.3UH	1	
L706	VLQEL05S1R5J	COIL 1.5UH	1	
L707	VLQEL05S560J	COIL 56UH	1	
Q1	2SC2295	TRANSISTOR CHIP	1	(B,C)
Q2	2SD601	TRANSISTOR CHIP	1	(Q,R)
Q3	2SB709	TRANSISTOR CHIP	1	(Q,R)
Q4	UN2112	TRANSISTOR-RESISTOR	1	
Q5	2SK374	TRANSISTOR	1	
Q6	2SD601	TRANSISTOR CHIP	1	(Q,R)
Q7	2SB709	TRANSISTOR CHIP	1	(Q,R)
Q8	2SD601	TRANSISTOR CHIP	1	(Q,R)
Q9	2SC2295	TRANSISTOR CHIP	1	(B,C)
Q10	2SD601	TRANSISTOR CHIP	1	(Q,R)
Q11	2SB709	TRANSISTOR CHIP	1	(Q,R)
Q12-15	2SC2295	TRANSISTOR CHIP	4	(B,C)
Q17	2SD601	TRANSISTOR CHIP	1	(Q,R)
Q18	2SB709	TRANSISTOR CHIP	1	(Q,R)
Q19,20	2SC2295	TRANSISTOR CHIP	2	(B,C)
Q21	2SA1022	TRANSISTOR CHIP	1	(B,C)
Q22	2SC2295	TRANSISTOR CHIP	1	(B,C)
Q23	2SA1022	TRANSISTOR CHIP	1	(B,C)
Q24	2SK198	TRANSISTOR CHIP	1	(Q)
Q25-27	2SC2295	TRANSISTOR CHIP	3	(B,C)
Q28,29	2SB709	TRANSISTOR CHIP	2	(Q,R)
Q30	2SC2295	TRANSISTOR CHIP	1	(B,C)
Q31	2SD601	TRANSISTOR CHIP	1	(Q,R)
Q32	2SC2295	TRANSISTOR CHIP	1	(B,C)
Q33	2SD601	TRANSISTOR CHIP	1	(Q,R)
Q34-36	2SC2295	TRANSISTOR CHIP	3	(B,C)
Q37	2SA1022	TRANSISTOR CHIP	1	(B,C)
Q38	2SC2295	TRANSISTOR CHIP	1	(B,C)
Q39	2SA1022	TRANSISTOR CHIP	1	(B,C)
Q40	2SK198	TRANSISTOR CHIP	1	(Q)
Q41-43	2SC2295	TRANSISTOR CHIP	3	(B,C)
Q44	2SB709	TRANSISTOR CHIP	1	(Q,R)
Q45	2SD601	TRANSISTOR CHIP	1	(Q,R)
Q46	2SC2295	TRANSISTOR CHIP	1	(B,C)
Q47	2SD601	TRANSISTOR CHIP	1	(Q,R)
Q48-50	2SC2404	TRANSISTOR CHIP	3	(C,D)
Q51-53	2SK374	TRANSISTOR	3	

Ref.No.	Part No.	Part Name & Description	Pcs	Remarks
Q54	2SC2404	TRANSISTOR CHIP	1	(C,D)
Q55	2SA1226	TRANSISTOR	1	
Q56	2SC2404	TRANSISTOR CHIP	1	(C,D)
Q57	2SA1226	TRANSISTOR	1	
Q58	2SC2295	TRANSISTOR CHIP	1	(B,C)
Q59	2SB709	TRANSISTOR CHIP	1	(Q,R)
Q60	2SD601	TRANSISTOR CHIP	1	(Q,R)
Q61	UN2112	TRANSISTOR-RESISTOR	1	
Q62	2SD601	TRANSISTOR CHIP	1	(Q,R)
Q64	UN2212	TRANSISTOR-RESISTOR	1	
Q201,02	2SC2295	TRANSISTOR CHIP	2	(B,C)
Q203,04	2SA1022	TRANSISTOR CHIP	2	(B,C)
Q205	2SD601	TRANSISTOR CHIP	1	(Q,R)
Q206	2SC2295	TRANSISTOR CHIP	1	(B,C)
Q207	2SD601	TRANSISTOR CHIP	1	(Q,R)
Q209	2SC2295	TRANSISTOR CHIP	1	(B,C)
Q210	2SA1022	TRANSISTOR CHIP	1	(B,C)
Q212	2SC2295	TRANSISTOR CHIP	1	(B,C)
Q213	2SD601	TRANSISTOR CHIP	1	(Q,R)
Q214,15	2SB709	TRANSISTOR CHIP	2	(Q,R)
Q216	2SD601	TRANSISTOR CHIP	1	(Q,R)
Q217	2SC2295	TRANSISTOR CHIP	1	(B,C)
Q218,19	2SB709	TRANSISTOR CHIP	2	(Q,R)
Q230	2SB709	TRANSISTOR CHIP	1	(Q,R)
Q231,32	2SD601	TRANSISTOR CHIP	2	(Q,R)
Q233	2SC2404	TRANSISTOR CHIP	1	(C,D)
Q234	2SB709	TRANSISTOR CHIP	1	(Q,R)
Q235,36	2SD601	TRANSISTOR CHIP	2	(Q,R)
Q237	2SC2404	TRANSISTOR CHIP	1	(C,D)
Q238,39	2SB709	TRANSISTOR CHIP	2	(Q,R)
Q240	UN2212	TRANSISTOR-RESISTOR	1	
Q241,42	2SB709	TRANSISTOR CHIP	2	(Q,R)
Q401,02	UN2212	TRANSISTOR-RESISTOR	2	
Q501,02	2SD601	TRANSISTOR CHIP	2	(Q,R)
Q503,04	2SC2295	TRANSISTOR CHIP	2	(B,C)
Q506	2SC2295	TRANSISTOR CHIP	1	(B,C)
Q507	2SK374	TRANSISTOR	1	
Q509,10	2SD601	TRANSISTOR CHIP	2	(Q,R)
Q511,12	2SC2295	TRANSISTOR CHIP	2	(B,C)
Q514	2SC2295	TRANSISTOR CHIP	1	(B,C)
Q515	2SK374	TRANSISTOR	1	
Q517	2SB709	TRANSISTOR CHIP	1	(Q,R)
Q518,19	2SD601	TRANSISTOR CHIP	2	(Q,R)
Q520	2SB709	TRANSISTOR CHIP	1	(Q,R)
Q521	2SD601	TRANSISTOR CHIP	1	(Q,R)
Q522	2SB709	TRANSISTOR CHIP	1	(Q,R)
Q523	2SD601	TRANSISTOR CHIP	1	(Q,R)
Q525	2SA1022	TRANSISTOR CHIP	1	(B,C)
Q601	2SD601	TRANSISTOR CHIP	1	(Q,R)
Q602	2SA1022	TRANSISTOR CHIP	1	(B,C)
Q603	2SB709	TRANSISTOR CHIP	1	(Q,R)
Q604-06	2SC2295	TRANSISTOR CHIP	3	(B,C)
Q609	2SB709	TRANSISTOR CHIP	1	(Q,R)
Q701	2SD601	TRANSISTOR CHIP	1	(Q,R)
Q702	2SC2404	TRANSISTOR CHIP	1	(C,D)
Q703	2SD601	TRANSISTOR CHIP	1	(Q,R)
Q704	UN2112	TRANSISTOR-RESISTOR	1	
Q705	2SC3757	TRANSISTOR	1	(Q,R)
Q706	2SD601	TRANSISTOR CHIP	1	(Q,R)
Q707	2SC3757	TRANSISTOR	1	(Q,R)
Q708,09	2SA1226	TRANSISTOR	2	
Q710	2SC3757	TRANSISTOR	1	(Q,R)
Q711	2SB709	TRANSISTOR CHIP	1	(Q,R)
Q712	UN2212	TRANSISTOR-RESISTOR	1	
		RESISTORS		
R1	ERJ6GEYJ471	M.RESISTOR CH 1/10W 470	1	
R2,R3	ERJ6GEYG122	M.RESISTOR CH 1/10W 1.2K	2	
R4	ERJ6GEYJ332	M.RESISTOR CH 1/10W 3.3K	1	
R5,R6	ERJ6GEYJ152	M.RESISTOR CH 1/10W 1.5K	2	
R7	ERJ6GEYJ122	M.RESISTOR CH1/10W 1.2K	1	
R8	ERJ6GEYJ332	M.RESISTOR CH 1/10W 3.3K	1	
R9	ERJ6GEYJ103	M.RESISTOR CH 1/10W 10K	1	

Refer to the P.C.BOARDS LIST, page 6-1-1, before using this page.

Ref.No.		Part No.	Part Name & Description	Pcs	Remarks
R10		ERJ6GEYJ103	M.RESISTOR CH 1/10W 10K	1	
R11		ERJ6GEYJ472	M.RESISTOR CH 1/10W 4.7K	1	
R12		ERJ6GEYJ224	M.RESISTOR CH 1/10W 220K	1	
R13		ERJ6GEYJ684	M.RESISTOR CH 1/10W 680K	1	
R14		ERJ6GEYJ103	M.RESISTOR CH 1/10W 10K	1	
R15		ERJ6GEYJ222	M.RESISTOR CH 1/10W 2.2K	1	
R16		ERJ6GEYJ102	M.RESISTOR CH 1/10W 1K	1	
R17		ERJ6GEYJ222	M.RESISTOR CH 1/10W 2.2K	1	
R18,19		ERJ6GEYJ333	M.RESISTOR CH 1/10W 33K	2	
R20		ERJ6GEYJ102	M.RESISTOR CH 1/10W 1K	1	
R21		ERSA10J152	M.RESISTOR 1.5K	1	
R22		ERJ6GEYJ332	M.RESISTOR CH 1/10W 3.3K	1	
R23		ERJ6GEYJ101	M.RESISTOR CH 1/10W 100	1	
R24		ERJ6GEYJ682	M.RESISTOR CH 1/10W 6.8K	1	
R25		ERJ6GEYJ101	M.RESISTOR CH 1/10W 100	1	
R26		ERJ6GEYJ472	M.RESISTOR CH 1/10W 4.7K	1	
R27		ERJ6GEYJ103	M.RESISTOR CH 1/10W 10K	1	
R28		ERJ6GEYJ182	M.RESISTOR CH 1/10W 1.8K	1	
R29		ERJ6GEYJ152	M.RESISTOR CH 1/10W 1.5K	1	
R30		ERJ6GEYJ821	M.RESISTOR CH 1/10W 820	1	
R31		ERJ6GEYJ222	M.RESISTOR CH 1/10W 2.2K	1	
R32-34		ERJ6GEYJ101	M.RESISTOR CH 1/10W 100	3	
R35		ERJ6GEYJ472	M.RESISTOR CH 1/10W 4.7K	1	
R36		VRE0034E201	M.RESISTOR CH 1/10W 200	1	
R37		ERJ6GEYJ471	M.RESISTOR CH 1/10W 470	1	
R38		ERJ6GEYJ102	M.RESISTOR CH 1/10W 1K	1	
R39		ERJ6GEYG181	M.RESISTOR CH 1/10W 180	1	
R40		ERJ6GEYJ221	M.RESISTOR CH 1/10W 220	1	
R41		ERJ6GEYJ101	M.RESISTOR CH 1/10W 100	1	
R42,43		ERJ6GEYJ331	M.RESISTOR CH 1/10W 330	2	
R44,45		ERJ6GEYJ681	M.RESISTOR CH 1/10W 680	2	
R46		ERJ6GEYJ102	M.RESISTOR CH 1/10W 1K	1	
R47		ERJ6GEYJ470	M.RESISTOR CH 1/10W 47	1	
R48		ERJ6GEYJ332	M.RESISTOR CH 1/10W 3.3K	1	
R49		ERJ6GEYJ102	M.RESISTOR CH 1/10W 1K	1	
R50		ERJ6GEYJ332	M.RESISTOR CH 1/10W 3.3K	1	
R51		ERJ6GEYJ562	M.RESISTOR CH 1/10W 5.6K	1	
R52		ERJ6GEYJ182	M.RESISTOR CH 1/10W 1.8K	1	
R53		ERJ6GEYJ750	M.RESISTOR CH 1/10W 75	1	
R55		ERJ6GEYJ222	M.RESISTOR CH 1/10W 2.2K	1	
R56		ERJ6GEYJ221	M.RESISTOR CH 1/10W 220	1	
R57		ERJ6GEYJ822	M.RESISTOR CH 1/10W 8.2K	1	
R58		ERJ6GEYJ223	M.RESISTOR CH 1/10W 22K	1	
R59		ERJ6GEYJ272	M.RESISTOR CH 1/10W 2.7K	1	
R60		ERJ6GEYJ330	M.RESISTOR CH1/10W 33	1	
R61,62		ERJ6GEYJ220	M.RESISTOR CH1/10W 22	2	
R63-66		ERJ6GEYJ560	M.RESISTOR CH 1/10W 56	4	
R67		ERJ6GEYJ221	M.RESISTOR CH 1/10W 220	1	
R68		ERJ6GEYJ272	M.RESISTOR CH 1/10W 2.7K	1	
R69		ERJ6GEYJ124	M.RESISTOR CH 1/10W 120K	1	
R70		ERJ6GEYJ334	M.RESISTOR CH 1/10W 330K	1	
R71		ERJ6GEYJ102	M.RESISTOR CH 1/10W 1K	1	
R72		ERJ6GEYJ472	M.RESISTOR CH 1/10W 4.7K	1	
R73		ERJ6GEYJ151	M.RESISTOR CH 1/10W 150	1	
R74		ERJ6GEYJ472	M.RESISTOR CH 1/10W 4.7K	1	
R75		ERJ6GEYJ222	M.RESISTOR CH 1/10W 2.2K	1	
R76		ERJ6GEYJ102	M.RESISTOR CH 1/10W 1K	1	
R77		ERJ6GEYJ103	M.RESISTOR CH 1/10W 10K	1	
R78		ERJ6GEYJ152	M.RESISTOR CH 1/10W 1.5K	1	
R79		ERJ6GEYJ332	M.RESISTOR CH 1/10W 3.3K	1	
R80		ERJ6GEYJ152	M.RESISTOR CH 1/10W 1.5K	1	
R81		ERJ6GEYJ472	M.RESISTOR CH 1/10W 4.7K	1	
R82		ERJ6GEYJ152	M.RESISTOR CH 1/10W 1.5K	1	
R83		ERJ6GEYJ101	M.RESISTOR CH 1/10W 100	1	
R84,85		ERJ6GEYJ681	M.RESISTOR CH 1/10W 680	2	
R86		ERJ6GEYJ152	M.RESISTOR CH 1/10W 1.5K	1	
R87		ERJ6GEYJ103	M.RESISTOR CH 1/10W 10K	1	
R88		ERJ6GEYJ182	M.RESISTOR CH 1/10W 1.8K	1	
R89		ERJ6GEYJ152	M.RESISTOR CH 1/10W 1.5K	1	
R90		ERJ6GEYJ561	M.RESISTOR CH 1/10W 560	1	
R91		ERJ6GEYJ222	M.RESISTOR CH 1/10W 2.2K	1	
R92		ERJ6GEYJ123	M.RESISTOR CH1/10W 12K	1	
R93		ERJ6GEYJ682	M.RESISTOR CH 1/10W 6.8K	1	
R94		ERJ6GEYJ122	M.RESISTOR CH1/10W 1.2K	1	
R95		ERJ6GEYJ152	M.RESISTOR CH 1/10W 1.5K	1	

Ref.No.		Part No.	Part Name & Description	Pcs	Remarks
R96		ERJ6GEYJ273	M.RESISTOR CH1/10W 27K	1	
R97		ERJ6GEYJ333	M.RESISTOR CH 1/10W 33K	1	
R98		ERJ6GEYJ822	M.RESISTOR CH 1/10W 8.2K	1	
R99		ERJ6GEYJ223	M.RESISTOR CH 1/10W 22K	1	
R100		ERJ6GEYJ272	M.RESISTOR CH 1/10W 2.7K	1	
R101		ERJ6GEYJ330	M.RESISTOR CH1/10W 33	1	
R102,03		ERJ6GEYJ220	M.RESISTOR CH1/10W 22	2	
R104-07		ERJ6GEYJ560	M.RESISTOR CH 1/10W 56	4	
R108		ERJ6GEYJ221	M.RESISTOR CH 1/10W 220	1	
R109		ERJ6GEYJ104	M.RESISTOR CH 1/10W 100K	1	
R110		ERJ6GEYJ334	M.RESISTOR CH 1/10W 330K	1	
R111		ERJ6GEYJ102	M.RESISTOR CH 1/10W 1K	1	
R112		ERJ6GEYJ472	M.RESISTOR CH 1/10W 4.7K	1	
R113		ERJ6GEYJ181	M.RESISTOR CH1/10W 180	1	
R114		ERJ6GEYJ472	M.RESISTOR CH 1/10W 4.7K	1	
R115		ERJ6GEYJ102	M.RESISTOR CH 1/10W 1K	1	
R116		ERJ6GEYJ103	M.RESISTOR CH 1/10W 10K	1	
R117		ERJ6GEYJ152	M.RESISTOR CH 1/10W 1.5K	1	
R118		ERJ6GEYJ331	M.RESISTOR CH 1/10W 330	1	
R119		ERJ6GEYJ152	M.RESISTOR CH 1/10W 1.5K	1	
R120		ERJ6GEYJ472	M.RESISTOR CH 1/10W 4.7K	1	
R121		ERJ6GEYJ152	M.RESISTOR CH 1/10W 1.5K	1	
R122		ERJ6GEYJ103	M.RESISTOR CH 1/10W 10K	1	
R123		ERJ6GEYJ182	M.RESISTOR CH 1/10W 1.8K	1	
R124		ERJ6GEYJ152	M.RESISTOR CH 1/10W 1.5K	1	
R125		ERJ6GEYJ561	M.RESISTOR CH 1/10W 560	1	
R126		ERJ6GEYJ222	M.RESISTOR CH 1/10W 2.2K	1	
R127,28		ERJ6GEYJ221	M.RESISTOR CH 1/10W 220	2	
R129-34		ERJ6GEYJ103	M.RESISTOR CH 1/10W 10K	6	
R137		ERJ6GEYJ103	M.RESISTOR CH 1/10W 10K	1	
R138		ERJ6GEYJ472	M.RESISTOR CH 1/10W 4.7K	1	
R139,40		ERJ6GEYJ103	M.RESISTOR CH 1/10W 10K	2	
R141,42		ERJ6GEYJ222	M.RESISTOR CH 1/10W 2.2K	2	
R143		ERJ6GEYJ472	M.RESISTOR CH 1/10W 4.7K	1	
R144,45		ERJ6GEYJ103	M.RESISTOR CH 1/10W 10K	2	
R146,47		ERJ6GEYJ222	M.RESISTOR CH 1/10W 2.2K	2	
R148		ERJ6GEYJ472	M.RESISTOR CH 1/10W 4.7K	1	
R149		ERJ6GEYJ392	M.RESISTOR CH 1/10W 3.9K	1	
R150		ERJ6GEYJ683	M.RESISTOR CH 1/10W 68K	1	
R151		ERJ6GEYG392	M.RESISTOR CH 1/10W 3.9K	1	
R152		ERJ6GEYJ222	M.RESISTOR CH 1/10W 2.2K	1	
R153		ERJ6GEYJ561	M.RESISTOR CH 1/10W 560	1	
R154		ERJ6GEYJ223	M.RESISTOR CH 1/10W 22K	1	
R155		ERJ6GEYJ332	M.RESISTOR CH 1/10W 3.3K	1	
R156		ERJ6GEYJ223	M.RESISTOR CH 1/10W 22K	1	
R157		ERJ6GEYJ222	M.RESISTOR CH 1/10W 2.2K	1	
R158,59		ERJ6GEYJ223	M.RESISTOR CH 1/10W 22K	2	
R161		ERJ6GEYJ331	M.RESISTOR CH 1/10W 330	1	
R162		ERJ6GEYJ221	M.RESISTOR CH 1/10W 220	1	
R163		ERJ6GEYJ471	M.RESISTOR CH 1/10W 470	1	
R164		ERJ6GEYJ221	M.RESISTOR CH 1/10W 220	1	
R165-71		ERJ6GEYJ101	M.RESISTOR CH 1/10W 100	7	
R175		ERJ6GEYJ222	M.RESISTOR CH 1/10W 2.2K	1	
R176		ERJ6GEYJ101	M.RESISTOR CH 1/10W 100	1	
R177		ERJ6GEYJ103	M.RESISTOR CH 1/10W 10K	1	
R182		ERJ6GEYJ473	M.RESISTOR CH 1/10W 47K	1	
R183		ERJ6GEYJ562	M.RESISTOR CH 1/10W 5.6K	1	
R188		ERJ6GEYJ222	M.RESISTOR CH 1/10W 2.2K	1	
R193		ERJ6GEYJ103	M.RESISTOR CH 1/10W 10K	1	
R201		ERJ6GEYJ101	M.RESISTOR CH 1/10W 100	1	
R202		ERJ6GEYJ470	M.RESISTOR CH 1/10W 47	1	
R203		ERJ6GEYJ272	M.RESISTOR CH 1/10W 2.7K	1	
R204,05		ERJ6GEYJ103	M.RESISTOR CH 1/10W 10K	2	
R206		ERDS2TJ681	C.RESISTOR 1/4W 680	1	
R207		ERJ6GEYG102	M.RESISTOR CH 1/10W 1K	1	
R208		ERJ6GEYJ472	M.RESISTOR CH 1/10W 4.7K	1	
R209		ERJ6GEYJ103	M.RESISTOR CH 1/10W 10K	1	
R210,11		ERJ6GEYJ472	M.RESISTOR CH 1/10W 4.7K	2	
R212		ERJ6GEYJ182	M.RESISTOR CH 1/10W 1.8K	1	
R213		ERDS2TJ471	C.RESISTOR 1/4W 470	1	
R214,15		ERJ6GEYJ472	M.RESISTOR CH 1/10W 4.7K	2	
R216		ERJ6GEYJ561	M.RESISTOR CH 1/10W 560	1	
R217		ERJ6GEYJ222	M.RESISTOR CH 1/10W 2.2K	1	
R219		ERJ6GEYJ101	M.RESISTOR CH 1/10W 100	1	
R220		ERJ6GEYJ221	M.RESISTOR CH 1/10W 220	1	

Refer to the P.C.BOARDS LIST, page 6-1-1, before using this page.

Ref.No.		Part No.	Part Name & Description	Pcs	Remarks
R221		ERJ6GEYJ332	M.RESISTOR CH 1/10W 3.3K	1	
R226		ERJ6GEYJ472	M.RESISTOR CH 1/10W 4.7K	1	
R227-29		ERJ6GEYJ152	M.RESISTOR CH 1/10W 1.5K	3	
R230		ERJ6GEYJ221	M.RESISTOR CH 1/10W 220	1	
R231		ERJ6GEYJ102	M.RESISTOR CH 1/10W 1K	1	
R232		ERJ6GEYJ332	M.RESISTOR CH 1/10W 3.3K	1	
R235,36		ERJ6GEYJ152	M.RESISTOR CH 1/10W 1.5K	2	
R237		ERJ6GEYJ681	M.RESISTOR CH 1/10W 680	1	
R238		ERJ6GEYJ332	M.RESISTOR CH 1/10W 3.3K	1	
R239		ERJ6GEYJ102	M.RESISTOR CH 1/10W 1K	1	
R240		ERJ6GEYJ152	M.RESISTOR CH 1/10W 1.5K	1	
R241,42		ERJ6GEYJ102	M.RESISTOR CH 1/10W 1K	2	
R246		ERJ6GEYJ184	M.RESISTOR CH1/10W 180K	1	
R247		ERJ6GEYJ103	M.RESISTOR CH 1/10W 10K	1	
R248		ERJ6GEYJ472	M.RESISTOR CH 1/10W 4.7K	1	
R249		ERJ6GEYJ122	M.RESISTOR CH1/10W 1.2K	1	
R250		ERJ6GEYJ331	M.RESISTOR CH 1/10W 330	1	
R251		ERJ6GEYJ472	M.RESISTOR CH 1/10W 4.7K	1	
R252		ERJ6GEYJ222	M.RESISTOR CH 1/10W 2.2K	1	
R253		ERJ6GEYJ102	M.RESISTOR CH 1/10W 1K	1	
R254		ERJ6GEYJ472	M.RESISTOR CH 1/10W 4.7K	1	
R255		ERJ6GEYJ222	M.RESISTOR CH 1/10W 2.2K	1	
R256		ERDS2TJ221	C.RESISTOR 1/4W 220	1	
R257		ERJ6GEYJ221	M.RESISTOR CH 1/10W 220	1	
R258		ERJ6GEYJ101	M.RESISTOR CH 1/10W 100	1	
R259		ERJ6GEYJ391	M.RESISTOR CH 1/10W 390	1	
R260		ERJ6GEYJ151	M.RESISTOR CH 1/10W 150	1	
R261		ERDS2TJ331	C.RESISTOR 1/4W 330	1	
R262		ERJ6GEYJ152	M.RESISTOR CH 1/10W 1.5K	1	
R264		ERJ6GEYJ470	M.RESISTOR CH 1/10W 47	1	
R265		ERJ6GEYJ103	M.RESISTOR CH 1/10W 10K	1	
R266		ERJ6GEYJ101	M.RESISTOR CH 1/10W 100	1	
R267		ERJ6GEYJ472	M.RESISTOR CH 1/10W 4.7K	1	
R295,96		ERJ6GEYJ222	M.RESISTOR CH 1/10W 2.2K	2	
R297		ERJ6GEYJ102	M.RESISTOR CH 1/10W 1K	1	
R298		ERJ6GEYJ470	M.RESISTOR CH 1/10W 47	1	
R299,00		ERJ6GEYJ152	M.RESISTOR CH 1/10W 1.5K	2	
R301		ERJ6GEYJ561	M.RESISTOR CH 1/10W 560	1	
R302		ERJ6GEYJ470	M.RESISTOR CH 1/10W 47	1	
R303		ERJ6GEYJ222	M.RESISTOR CH 1/10W 2.2K	1	
R304		ERJ6GEYJ332	M.RESISTOR CH 1/10W 3.3K	1	
R305		ERJ6GEYJ103	M.RESISTOR CH 1/10W 10K	1	
R306,07		ERJ6GEYJ223	M.RESISTOR CH 1/10W 22K	2	
R308		ERJ6GEYJ101	M.RESISTOR CH 1/10W 100	1	
R309		ERJ6GEYJ105	M.RESISTOR CH 1/10W 1M	1	
R310		ERJ6GEYJ472	M.RESISTOR CH 1/10W 4.7K	1	
R311		ERJ6GEYJ103	M.RESISTOR CH 1/10W 10K	1	
R312		ERJ6GEYJ101	M.RESISTOR CH 1/10W 100	1	
R313		ERJ6GEYJ472	M.RESISTOR CH 1/10W 4.7K	1	
R314		ERJ6GEYJ103	M.RESISTOR CH 1/10W 10K	1	
R315,16		ERJ6GEYJ561	M.RESISTOR CH 1/10W 560	2	
R317		ERJ6GEYJ102	M.RESISTOR CH 1/10W 1K	1	
R318		ERJ6GEYJ470	M.RESISTOR CH 1/10W 47	1	
R319		ERJ6GEYJ152	M.RESISTOR CH 1/10W 1.5K	1	
R320		ERJ6GEYJ561	M.RESISTOR CH 1/10W 560	1	
R321		ERJ6GEYJ152	M.RESISTOR CH 1/10W 1.5K	1	
R322		ERJ6GEYJ470	M.RESISTOR CH 1/10W 47	1	
R323		ERJ6GEYJ222	M.RESISTOR CH 1/10W 2.2K	1	
R324		ERJ6GEYJ332	M.RESISTOR CH 1/10W 3.3K	1	
R325		ERJ6GEYJ103	M.RESISTOR CH 1/10W 10K	1	
R326,27		ERJ6GEYJ223	M.RESISTOR CH 1/10W 22K	2	
R328		ERJ6GEYJ101	M.RESISTOR CH 1/10W 100	1	
R330		ERJ6GEYJ105	M.RESISTOR CH 1/10W 1M	1	
R331		ERJ6GEYJ472	M.RESISTOR CH 1/10W 4.7K	1	
R332		ERJ6GEYJ103	M.RESISTOR CH 1/10W 10K	1	
R333		ERJ6GEYJ101	M.RESISTOR CH 1/10W 100	1	
R334		ERJ6GEYJ472	M.RESISTOR CH 1/10W 4.7K	1	
R335		ERJ6GEYJ101	M.RESISTOR CH 1/10W 100	1	
R336		ERJ6GEYJ272	M.RESISTOR CH 1/10W 2.7K	1	
R337		ERJ6GEYJ183	M.RESISTOR CH 1/10W 18K	1	
R338		ERJ6GEYJ101	M.RESISTOR CH 1/10W 100	1	
R345		ERJ6GEY0R00	M.RESISTOR CH 1/10W 0	1	
R346		ERJ6GEYJ103	M.RESISTOR CH 1/10W 10K	1	
R347		ERJ6GEYJ334	M.RESISTOR CH 1/10W 330K	1	
R348		ERJ6GEYJ472	M.RESISTOR CH 1/10W 4.7K	1	

Ref.No.		Part No.	Part Name & Description	Pcs	Remarks
R349,50		ERJ6GEYJ103	M.RESISTOR CH 1/10W 10K	2	
R351		ERJ6GEYJ563	M.RESISTOR CH 1/10W 56K	1	
R353		ERJ6GEYJ561	M.RESISTOR CH 1/10W 560	1	
R354		ERJ6GEYJ102	M.RESISTOR CH 1/10W 1K	1	
R362		ERJ6GEYJ472	M.RESISTOR CH 1/10W 4.7K	1	
R363		ERJ6GEYJ101	M.RESISTOR CH 1/10W 100	1	
R364		ERJ6GEYJ472	M.RESISTOR CH 1/10W 4.7K	1	
R365		ERJ6GEYJ334	M.RESISTOR CH 1/10W 330K	1	
R366		ERJ6GEYJ102	M.RESISTOR CH 1/10W 1K	1	
R367		ERJ6GEYJ153	M.RESISTOR CH 1/10W 15K	1	
R374		ERJ6GEYJ562	M.RESISTOR CH 1/10W 5.6K	1	
R401		ERJ6GEYJ333	M.RESISTOR CH 1/10W 33K	1	
R402		ERJ6GEYJ153	M.RESISTOR CH 1/10W 15K	1	
R403		ERJ6GEYJ272	M.RESISTOR CH 1/10W 2.7K	1	
R404		ERJ6GEYJ393	M.RESISTOR CH 1/10W 39K	1	
R405,06		ERJ6GEYJ103	M.RESISTOR CH 1/10W 10K	2	
R407,08		ERJ6GEY0R00	M.RESISTOR CH 1/10W 0	2	
R412,13		ERJ6GEYJ222	M.RESISTOR CH 1/10W 2.2K	2	
R415		ERJ6GEY0R00	M.RESISTOR CH 1/10W 0	1	
R416		ERJ6GEYJ222	M.RESISTOR CH 1/10W 2.2K	1	
R501		ERJ6GEYJ152	M.RESISTOR CH 1/10W 1.5K	1	
R502		ERJ6GEYJ271	M.RESISTOR CH 1/10W 270	1	
R503		ERJ6GEYJ102	M.RESISTOR CH 1/10W 1K	1	
R504		ERJ6GEYJ271	M.RESISTOR CH 1/10W 270	1	
R505		ERJ6GEYJ102	M.RESISTOR CH 1/10W 1K	1	
R506		ERJ6GEYJ332	M.RESISTOR CH 1/10W 3.3K	1	
R507		ERJ6GEYJ681	M.RESISTOR CH 1/10W 680	1	
R508		ERJ6GEYJ271	M.RESISTOR CH 1/10W 270	1	
R509		ERJ6GEYJ821	M.RESISTOR CH 1/10W 820	1	
R510		ERJ6GEYJ102	M.RESISTOR CH 1/10W 1K	1	
R511		ERJ6GEYJ470	M.RESISTOR CH 1/10W 47	1	
R512		ERJ6GEYJ272	M.RESISTOR CH 1/10W 2.7K	1	
R513		ERJ6GEYJ472	M.RESISTOR CH 1/10W 4.7K	1	
R514		ERJ6GEYJ470	M.RESISTOR CH 1/10W 47	1	
R515		ERJ6GEYJ153	M.RESISTOR CH 1/10W 15K	1	
R516		ERJ6GEYJ681	M.RESISTOR CH 1/10W 680	1	
R517		ERJ6GEYJ332	M.RESISTOR CH 1/10W 3.3K	1	
R518		ERJ6GEYJ103	M.RESISTOR CH 1/10W 10K	1	
R519		ERJ6GEYJ154	M.RESISTOR CH1/10W 150K	1	
R520		ERJ6GEYJ332	M.RESISTOR CH 1/10W 3.3K	1	
R521		ERJ6GEYJ331	M.RESISTOR CH 1/10W 330	1	
R522		ERJ6GEYJ105	M.RESISTOR CH 1/10W 1M	1	
R523		ERJ6GEYJ103	M.RESISTOR CH 1/10W 10K	1	
R524		ERJ6GEYJ472	M.RESISTOR CH 1/10W 4.7K	1	
R525		ERJ6GEYJ103	M.RESISTOR CH 1/10W 10K	1	
R526		ERJ6GEYJ152	M.RESISTOR CH 1/10W 1.5K	1	
R527		ERJ6GEYJ271	M.RESISTOR CH 1/10W 270	1	
R528		ERJ6GEYJ102	M.RESISTOR CH 1/10W 1K	1	
R529		ERJ6GEYJ332	M.RESISTOR CH 1/10W 3.3K	1	
R530		ERJ6GEYJ473	M.RESISTOR CH 1/10W 47K	1	
R531		ERJ6GEYJ821	M.RESISTOR CH 1/10W 820	1	
R532		ERJ6GEYJ102	M.RESISTOR CH 1/10W 1K	1	
R533,34		ERJ6GEYJ470	M.RESISTOR CH 1/10W 47	2	
R535		ERJ6GEYJ472	M.RESISTOR CH 1/10W 4.7K	1	
R536		ERJ6GEYJ153	M.RESISTOR CH 1/10W 15K	1	
R537		ERJ6GEYJ272	M.RESISTOR CH 1/10W 2.7K	1	
R538		ERJ6GEYJ681	M.RESISTOR CH 1/10W 680	1	
R539		ERJ6GEYJ182	M.RESISTOR CH 1/10W 1.8K	1	
R540		ERJ6GEYJ103	M.RESISTOR CH 1/10W 10K	1	
R541		ERJ6GEYJ104	M.RESISTOR CH 1/10W 100K	1	
R542		ERJ6GEYJ332	M.RESISTOR CH 1/10W 3.3K	1	
R543		ERJ6GEYJ331	M.RESISTOR CH 1/10W 330	1	
R544		ERJ6GEYJ103	M.RESISTOR CH 1/10W 10K	1	
R545		ERJ6GEYJ105	M.RESISTOR CH 1/10W 1M	1	
R546		ERJ6GEYJ472	M.RESISTOR CH 1/10W 4.7K	1	
R547		ERJ6GEYJ103	M.RESISTOR CH 1/10W 10K	1	
R548		ERJ6GEYJ102	M.RESISTOR CH 1/10W 1K	1	
R549		ERJ6GEYJ473	M.RESISTOR CH 1/10W 47K	1	
R550		ERJ6GEYJ222	M.RESISTOR CH 1/10W 2.2K	1	
R552,53		ERJ6GEYJ222	M.RESISTOR CH 1/10W 2.2K	2	
R554		ERJ6GEYJ102	M.RESISTOR CH 1/10W 1K	1	
R555		ERJ6GEYJ332	M.RESISTOR CH 1/10W 3.3K	1	
R556		ERJ6GEYJ222	M.RESISTOR CH 1/10W 2.2K	1	
R557		ERJ6GEYJ182	M.RESISTOR CH 1/10W 1.8K	1	
R558		ERJ6GEYJ222	M.RESISTOR CH 1/10W 2.2K	1	

Refer to the P.C.BOARDS LIST, page 6-1-1, before using this page.

Ref.No.		Part No.	Part Name & Description	Pcs	Remarks
R562,63		ERJ6GEYJ222	M.RESISTOR CH 1/10W 2.2K	2	
R564		ERJ6GEYJ332	M.RESISTOR CH 1/10W 3.3K	1	
R565		ERJ6GEYJ222	M.RESISTOR CH 1/10W 2.2K	1	
R566		ERJ6GEYJ470	M.RESISTOR CH 1/10W 47	1	
R567		ERJ6GEYJ222	M.RESISTOR CH 1/10W 2.2K	1	
R569		ERJ6GEYJ222	M.RESISTOR CH 1/10W 2.2K	1	
R571		ERJ6GEYJ102	M.RESISTOR CH 1/10W 1K	1	
R572		ERJ6GEYJ181	M.RESISTOR CH1/10W 180	1	
R573		ERJ6GEYJ750	M.RESISTOR CH 1/10W 75	1	
R574		ERJ6GEYJ102	M.RESISTOR CH 1/10W 1K	1	
R575		ERJ6GEYJ470	M.RESISTOR CH 1/10W 47	1	
R576		ERJ6GEYJ224	M.RESISTOR CH 1/10W 220K	1	
R577		ERJ6GEYJ684	M.RESISTOR CH 1/10W 680K	1	
R578		ERJ6GEYJ103	M.RESISTOR CH 1/10W 10K	1	
R579		ERJ6GEYJ222	M.RESISTOR CH 1/10W 2.2K	1	
R580		ERJ6GEYJ102	M.RESISTOR CH 1/10W 1K	1	
R581		ERJ6GEYJ222	M.RESISTOR CH 1/10W 2.2K	1	
R582-84		ERJ6GEYJ103	M.RESISTOR CH 1/10W 10K	3	
R585,86		ERJ6GEYJ470	M.RESISTOR CH 1/10W 47	2	
R587,88		ERJ6GEYJ104	M.RESISTOR CH 1/10W 100K	2	
R589		ERJ6GEYJ221	M.RESISTOR CH 1/10W 220	1	
R601,02		ERJ6GEYJ222	M.RESISTOR CH 1/10W 2.2K	2	
R603-10		ERJ6GEYJ152	M.RESISTOR CH 1/10W 1.5K	8	
R613		VRE0034E361	M.RESISTOR CH 1/10W 360	1	
R614,15		VRE0034E102	M.RESISTOR CH 1/10W 1K	2	
R616		VRE0034E272	M.RESISTOR CH 1/10W 2.7K	1	
R617		VRE0034E202	M.RESISTOR CH 1/10W 2K	1	
R618		VRE0034E152	M.RESISTOR CH 1/10W 1.5K	1	
R620		ERJ6GEYJ102	M.RESISTOR CH 1/10W 1K	1	
R621		ERJ6GEYJ103	M.RESISTOR CH 1/10W 10K	1	
R622		ERJ6GEYJ152	M.RESISTOR CH 1/10W 1.5K	1	
R623,24		ERJ6GEYG301	M.RESISTOR CH 1/10W 300	2	
R625		ERJ6GEYJ222	M.RESISTOR CH 1/10W 2.2K	1	
R626,27		ERJ6GEYJ681	M.RESISTOR CH 1/10W 680	2	
R628		ERJ6GEYJ103	M.RESISTOR CH 1/10W 10K	1	
R630		ERJ6GEYJ332	M.RESISTOR CH 1/10W 3.3K	1	
R631		ERJ6GEYJ470	M.RESISTOR CH 1/10W 47	1	
R632		ERJ6GEYJ472	M.RESISTOR CH 1/10W 4.7K	1	
R633		ERJ6GEYJ272	M.RESISTOR CH 1/10W 2.7K	1	
R634		ERJ6GEYJ822	M.RESISTOR CH 1/10W 8.2K	1	
R635		ERJ6GEYJ222	M.RESISTOR CH 1/10W 2.2K	1	
R636		ERJ6GEYJ102	M.RESISTOR CH 1/10W 1K	1	
R638		ERJ6GEYJ332	M.RESISTOR CH 1/10W 3.3K	1	
R640		ERJ6GEYJ101	M.RESISTOR CH 1/10W 100	1	
R641		ERJ6GEYJ102	M.RESISTOR CH 1/10W 1K	1	
R643		ERJ6GEYJ103	M.RESISTOR CH 1/10W 10K	1	
R644		ERJ6GEYJ101	M.RESISTOR CH 1/10W 100	1	
R645		ERJ6GEYJ103	M.RESISTOR CH 1/10W 10K	1	
R646		ERJ6GEYJ101	M.RESISTOR CH 1/10W 100	1	
R647		ERJ6GEYJ222	M.RESISTOR CH 1/10W 2.2K	1	
R648		ERJ6GEYJ330	M.RESISTOR CH1/10W 33	1	
R656		ERJ6GEYJ102	M.RESISTOR CH 1/10W 1K	1	
R701		ERJ6GEYJ103	M.RESISTOR CH 1/10W 10K	1	
R702		ERJ6GEYJ682	M.RESISTOR CH 1/10W 6.8K	1	
R703		ERJ6GEYJ222	M.RESISTOR CH 1/10W 2.2K	1	
R704		ERJ6GEYJ683	M.RESISTOR CH 1/10W 68K	1	
R705		ERJ6GEYJ332	M.RESISTOR CH 1/10W 3.3K	1	
R706,07		ERJ6GEYJ562	M.RESISTOR CH 1/10W 5.6K	2	
R708		ERJ6GEYJ222	M.RESISTOR CH 1/10W 2.2K	1	
R709		ERJ6GEYJ332	M.RESISTOR CH 1/10W 3.3K	1	
R710		ERJ6GEYJ392	M.RESISTOR CH 1/10W 3.9K	1	
R711		ERJ6GEYJ103	M.RESISTOR CH 1/10W 10K	1	
R712		ERJ6GEYJ472	M.RESISTOR CH 1/10W 4.7K	1	
R713		ERJ6GEYJ152	M.RESISTOR CH 1/10W 1.5K	1	
R714		ERJ6GEYJ472	M.RESISTOR CH 1/10W 4.7K	1	
R715		ERJ6GEYJ103	M.RESISTOR CH 1/10W 10K	1	
R716		ERJ6GEYJ153	M.RESISTOR CH 1/10W 15K	1	
R717,18		ERJ6GEYJ104	M.RESISTOR CH 1/10W 100K	2	
R719		ERJ6GEYJ123	M.RESISTOR CH1/10W 12K	1	
R720		ERJ6GEYJ223	M.RESISTOR CH 1/10W 22K	1	
R721,22		ERJ6GEYJ103	M.RESISTOR CH 1/10W 10K	2	
R723		ERJ6GEYJ473	M.RESISTOR CH 1/10W 47K	1	
R724		ERJ6GEYJ104	M.RESISTOR CH 1/10W 100K	1	
R725,26		ERJ6GEYJ472	M.RESISTOR CH 1/10W 4.7K	2	
R727		ERJ6GEYJ103	M.RESISTOR CH 1/10W 10K	1	

Ref.No.		Part No.	Part Name & Description	Pcs	Remarks
R728		ERJ6GEYJ102	M.RESISTOR CH 1/10W 1K	1	
R729		ERJ6GEYJ473	M.RESISTOR CH 1/10W 47K	1	
R731		ERJ6GEYJ393	M.RESISTOR CH 1/10W 39K	1	
R732		ERJ6GEYJ223	M.RESISTOR CH 1/10W 22K	1	
R733		ERJ6GEYJ152	M.RESISTOR CH 1/10W 1.5K	1	
R734		ERJ6GEYJ102	M.RESISTOR CH 1/10W 1K	1	
R735,36		ERJ6GEYJ104	M.RESISTOR CH 1/10W 100K	2	
R737		ERJ6GEYJ152	M.RESISTOR CH 1/10W 1.5K	1	
R738,39		ERJ6GEYJ103	M.RESISTOR CH 1/10W 10K	2	
R748		ERJ6GEYJ103	M.RESISTOR CH 1/10W 10K	1	
R751		ERJ6GEYJ472	M.RESISTOR CH 1/10W 4.7K	1	
R752		ERJ6GEYJ152	M.RESISTOR CH 1/10W 1.5K	1	
R753,54		ERJ6GEYJ332	M.RESISTOR CH 1/10W 3.3K	2	
R755,56		ERJ6GEYJ222	M.RESISTOR CH 1/10W 2.2K	2	
R761		ERJ6GEYJ103	M.RESISTOR CH 1/10W 10K	1	
R762		ERJ6GEYJ822	M.RESISTOR CH 1/10W 8.2K	1	
R763,64		ERJ6GEYJ102	M.RESISTOR CH 1/10W 1K	2	
R765		ERJ6GEYJ332	M.RESISTOR CH 1/10W 3.3K	1	
R766		ERJ6GEYJ470	M.RESISTOR CH 1/10W 47	1	
R769-71		ERJ6GEYJ682	M.RESISTOR CH 1/10W 6.8K	3	
SW201		VSS0126	SWITCH	1	
SW701		VSS0126	SWITCH	1	
TP1		VJR0582	PACK PIN	1	
TP3-P7		VJR0582	PACK PIN	5	
TP201-06		VJR0582	PACK PIN	6	
TP401-05		VJR0582	PACK PIN	5	
TP501,02		VJR0582	PACK PIN	2	
TP504		VJR0582	PACK PIN	1	
TP601		VJR0582	PACK PIN	1	
TP701-04		VJR0582	PACK PIN	4	
TPG201		VJR0582	PACK PIN	1	
TPG501,02		VJR0582	PACK PIN	2	
VC1		ECV1ZW20X53T	V.CAPACITOR 20P	1	
VC201		ECV1ZW50X53T	V.CAPACITOR 50P	1	
VC401		ECV1ZW10X53T	V.CAPACITOR 10P	1	
VL701		VLQ0415	COIL	1	
VR1		VRV0109B501	V.RESISTOR 500	1	
VR2,R3		VRV0109B102	V.RESISTOR 1K	2	
VR6-R9		VRV0109B501	V.RESISTOR 500	4	
VR10		VRV0109B501	V.RESISTOR 500	1	
VR11		VRV0109B102	V.RESISTOR 1K	1	
VR201-03		VRV0109B501	V.RESISTOR 500	3	
VR204,05		VRV0109B202	V.RESISTOR 2K	2	
VR206,07		VRV0109B102	V.RESISTOR 1K	2	
VR212		VRV0109B102	V.RESISTOR 1K	1	
VR213		VRV0109B202	V.RESISTOR 2K	1	
VR214		VRV0109B102	V.RESISTOR 1K	1	
VR215		VRV0109B202	V.RESISTOR 2K	1	
VR216,17		VRV0109B203	V.RESISTOR 20K	2	
VR218		VRV0064B502	V.RESISTOR 5K	1	
VR401,02		VRV0109B102	V.RESISTOR 1K	2	
VR403		VRV0109B103	V.RESISTOR 10K	1	
VR501,02		VRV0109B202	V.RESISTOR 2K	2	
VR503-05		VRV0109B102	V.RESISTOR 1K	3	
VR601,02		VRV0064B201	V.RESISTOR 200	2	
VR603,04		VRV0109B102	V.RESISTOR 1K	2	
VR701		VRV0109B202	V.RESISTOR 2K	1	
VR702-04		VRV0109B502	V.RESISTOR 5K	3	

Refer to the P.C.BOARDS LIST, page 6-1-1, before using this page.

Ref.No.		Part No.	Part Name & Description	Pcs	Remarks
X1		VSX0202	CRYSTAL OSCILLATOR	1	
X201		VSX0338	CRYSTAL OSCILLATOR	1	
X701		VSX0149	CRYSTAL OSCILLATOR	1	
			MISCELLANEOUS		
		VML2143	CARD PULLER	1	
		VML2144	CARD PULLER	1	
		VMS4174	PIN	6	
		VMZ1547	BARRIER	1	
		VSC1220	SHIELD CASE	1	
		VSC1871	SHIELD CASE	1	
		VSC1872	SHIELD CASE	1	
		VSC3056	SHIELD CASE	1	
		VXA3966	P.C.B. SHIELD PLATE	1	
		XNG26E	NUT	4	
		XYNV3+K6FR	SCREW	6	
		XYN26+C12	SCREW	4	

Refer to the P.C.BOARDS LIST, page 6-1-1, before using this page.

Ref.No.		Part No.	Part Name & Description	Pcs	Remarks
	■	VEP83099B	P.C.BOARD W/COMPONENT		FOR AU-65-E,B
			W4 DEC & CTCM		
			CAPACITORS		
C1		ECEA1HN010S	E.CAPACITOR 50V 1U	1	
C2,C3		ECEA0JN101S	E.CAPACITOR 6.3V 100U	2	
C4,C5		ECUM1H050DCN	C.CAPACITOR CH 50V 50P	2	
C6		ECUM1H103KBN	C.CAPACITOR CH 50V 0.01U	1	
C7		ECEA1CU470	E.CAPACITOR 16V 47U	1	
C8		ECUM1H103KBN	C.CAPACITOR CH 50V 0.01U	1	
C9		ECEA1CU470	E.CAPACITOR 16V 47U	1	
C10		ECUM1H103KBN	C.CAPACITOR CH 50V 0.01U	1	
C11		ECEA1CN101S	E.CAPACITOR 16V 100U	1	
C12		ECUM1H103KBN	C.CAPACITOR CH 50V 0.01U	1	
C13		ECEA1CU470	E.CAPACITOR 16V 47U	1	
C14,15		ECUM1H103KBN	C.CAPACITOR CH 50V 0.01U	2	
C16		ECUM1H820JCN	C.CAPACITOR CH 50V 82P	1	
C17		ECUM1H103KBN	C.CAPACITOR CH 50V 0.01U	1	
C18		ECEA1CU470	E.CAPACITOR 16V 47U	1	
C19		ECUM1H180JCN	C.CAPACITOR CH 50V 18P	1	
C20		ECUM1H820JCN	C.CAPACITOR CH 50V 82P	1	
C21,22		ECUM1H104KBM	C.CAPACITOR CH 50V 0.1U	2	
C23		ECEA1HN010S	E.CAPACITOR 50V 1U	1	
C24		ECUM1H101JCN	C.CAPACITOR CH 50V 100P	1	
C25		ECUM1H103KBN	C.CAPACITOR CH 50V 0.01U	1	
C26		ECEA1CU470	E.CAPACITOR 16V 47U	1	
C27		ECUM1H103KBN	C.CAPACITOR CH 50V 0.01U	1	
C28		ECEA1CU470	E.CAPACITOR 16V 47U	1	
C29		ECUM1H680JCN	C.CAPACITOR CH 50V 68P	1	
C30		ECUM1H103KBN	C.CAPACITOR CH 50V 0.01U	1	
C32		ERJ6GEY0R00	M.RESISTOR CH 1/10W 0	1	
C35		ECUM1H103KBN	C.CAPACITOR CH 50V 0.01U	1	
C40		ECUM1H103KBN	C.CAPACITOR CH 50V 0.01U	1	
C41		ECUM1H220JCN	C.CAPACITOR CH 50V 22P	1	
C42		ECUM1H103KBN	C.CAPACITOR CH 50V 0.01U	1	
C116		ECUM1H103KBN	C.CAPACITOR CH 50V 0.01U	1	
C118		ECUM1H103KBN	C.CAPACITOR CH 50V 0.01U	1	
C121		ECUM1H103KBN	C.CAPACITOR CH 50V 0.01U	1	
C122		ECEA1CU470	E.CAPACITOR 16V 47U	1	
C123		ECUM1H820JCN	C.CAPACITOR CH 50V 82P	1	
C124		ECUM1H103KBN	C.CAPACITOR CH 50V 0.01U	1	
C125		ECUM1H104KBM	C.CAPACITOR CH 50V 0.1U	1	
C140		ECUM1H220JCN	C.CAPACITOR CH 50V 22P	1	
C161		ECUM1E104ZFN	C.CAPACITOR CH 25V 0.1U	1	
C164		ECUM1H103KBN	C.CAPACITOR CH 50V 0.01U	1	
C165		ECEA1CU100	E.CAPACITOR 16V 10U	1	
C166		ECUM1H103KBN	C.CAPACITOR CH 50V 0.01U	1	
C167		ECEA1CU100	E.CAPACITOR 16V 10U	1	
C168		ECUM1E104ZFN	C.CAPACITOR CH 25V 0.1U	1	
C169		ECUM1H103KBN	C.CAPACITOR CH 50V 0.01U	1	
C170		ECEA1CU100	E.CAPACITOR 16V 10U	1	
C171		ECUM1E104ZFN	C.CAPACITOR CH 25V 0.1U	1	
C172		ECUM1H103KBN	C.CAPACITOR CH 50V 0.01U	1	
C173		ECEA1CU100	E.CAPACITOR 16V 10U	1	
C174		ECUM1E104ZFN	C.CAPACITOR CH 25V 0.1U	1	
C175		ECUM1H103KBN	C.CAPACITOR CH 50V 0.01U	1	
C176		ECEA1CU100	E.CAPACITOR 16V 10U	1	
C201,02		ECUM1H103KBN	C.CAPACITOR CH 50V 0.01U	2	
C203		ECEA1CU470	E.CAPACITOR 16V 47U	1	
C204		ECUM1H103KBN	C.CAPACITOR CH 50V 0.01U	1	
C205		ECEA1CU470	E.CAPACITOR 16V 47U	1	
C206		ECQM1H104JF	P.CAPACITOR 50V 0.1U	1	
C207		ECQM1H103JF	P.CAPACITOR 50V 0.01U	1	
C208		ECQM1H104JF	P.CAPACITOR 50V 0.1U	1	
C209		ECUM1H104KBM	C.CAPACITOR CH 50V 0.1U	1	
C210-12		ECUM1H103KBN	C.CAPACITOR CH 50V 0.01U	3	
C218		ECUM1H471JCN	C.CAPACITOR CH 50V 470P	1	
C219		ECUM1H103KBN	C.CAPACITOR CH 50V 0.01U	1	

Ref.No.		Part No.	Part Name & Description	Pcs	Remarks
C220		ECEA1CU470	E.CAPACITOR 16V 47U	1	
C221		ECUM1H103KBN	C.CAPACITOR CH 50V 0.01U	1	
C222		ECEA1CU470	E.CAPACITOR 16V 47U	1	
C223		ECUM1H020CCN	C.CAPACITOR CH 50V 2P	1	
C224		ECUM1H220JCN	C.CAPACITOR CH 50V 22P	1	
C225		ECUM1H470JCN	C.CAPACITOR CH 50V 47P	1	
C226		ECUM1H560JCN	C.CAPACITOR CH 50V 56P	1	
C227-31		ECUM1H103KBN	C.CAPACITOR CH 50V 0.01U	5	
C232		ECUM1H331JCN	C.CAPACITOR CH 50V 330P	1	
C233-35		ECUM1H104KBM	C.CAPACITOR CH 50V 0.1U	3	
C238		ECUM1H103KBN	C.CAPACITOR CH 50V 0.01U	1	
C240		ECUM1H103KBN	C.CAPACITOR CH 50V 0.01U	1	
C241		ECUM1H104KBM	C.CAPACITOR CH 50V 0.1U	1	
C244		ECEA1CN221S	E.CAPACITOR 16V 220U	1	
C245		ECUM1H080DCN	C.CAPACITOR CH 50V 80P	1	
C246		ECUM1H020CCN	C.CAPACITOR CH 50V 2P	1	
C247		ECUM1H103KBN	C.CAPACITOR CH 50V 0.01U	1	
C248		ECEA1CU470	E.CAPACITOR 16V 47U	1	
C249		ECUM1H103KBN	C.CAPACITOR CH 50V 0.01U	1	
C250		ECEA1CU470	E.CAPACITOR 16V 47U	1	
C251		ECUM1H103KBN	C.CAPACITOR CH 50V 0.01U	1	
C252		ECEA1CU470	E.CAPACITOR 16V 47U	1	
C273		ECUM1H103KBN	C.CAPACITOR CH 50V 0.01U	1	
C275,76		ECUM1H103KBN	C.CAPACITOR CH 50V 0.01U	2	
C280		ECUM1H103KBN	C.CAPACITOR CH 50V 0.01U	1	
C284		ECUM1H103KBN	C.CAPACITOR CH 50V 0.01U	1	
C286		ECEA1CU470	E.CAPACITOR 16V 47U	1	
C287		ECUM1H103KBN	C.CAPACITOR CH 50V 0.01U	1	
C288		ECUM1H180JCN	C.CAPACITOR CH 50V 18P	1	
C289		ECUM1H040DCN	C.CAPACITOR CH 50V 4P	1	
C290		ECUM1H680JCN	C.CAPACITOR CH 50V 68P	1	
C291		ECUM1H080DCN	C.CAPACITOR CH 50V 80P	1	
C292		ECUM1H680JCN	C.CAPACITOR CH 50V 68P	1	
C293		ECEA1CU470	E.CAPACITOR 16V 47U	1	
C294		ECEA0JU101	E.CAPACITOR 6.3V 100U	1	
C295		ECEA0JN101S	E.CAPACITOR 6.3V 100U	1	
C296		ECUM1H180JCN	C.CAPACITOR CH 50V 18P	1	
C297		ECUM1H040DCN	C.CAPACITOR CH 50V 4P	1	
C298		ECUM1H680JCN	C.CAPACITOR CH 50V 68P	1	
C299		ECUM1H080DCN	C.CAPACITOR CH 50V 80P	1	
C300		ECUM1H680JCN	C.CAPACITOR CH 50V 68P	1	
C301		ECEA1CU470	E.CAPACITOR 16V 47U	1	
C302		ECEA0JU101	E.CAPACITOR 6.3V 100U	1	
C303		ECEA0JN101S	E.CAPACITOR 6.3V 100U	1	
C304		ECEA1CU470	E.CAPACITOR 16V 47U	1	
C305		ECUM1H103KBN	C.CAPACITOR CH 50V 0.01U	1	
C306		ECEA1CU470	E.CAPACITOR 16V 47U	1	
C307-10		ECUM1H103KBN	C.CAPACITOR CH 50V 0.01U	4	
C311		ECEA1HNR47S	E.CAPACITOR 50V 0.47U	1	
C312		ECUM1C104KBN	C.CAPACITOR CH 16V 0.1U	1	
C313		ECUM1H103KBN	C.CAPACITOR CH 50V 0.01U	1	
C316-18		ECUM1H103KBN	C.CAPACITOR CH 50V 0.01U	3	
C319		ECUM1H220JCN	C.CAPACITOR CH 50V 22P	1	
C327		ECEA0JN101S	E.CAPACITOR 6.3V 100U	1	
C328		ECEA1CU470	E.CAPACITOR 16V 47U	1	
C329		ECUM1H103KBN	C.CAPACITOR CH 50V 0.01U	1	
C401		ECEA1CU470	E.CAPACITOR 16V 47U	1	
C402,03		ECUM1H103KBN	C.CAPACITOR CH 50V 0.01U	2	
C404		ECUM1H102JCN	C.CAPACITOR CH 50V 1000P	1	
C405		ECUM1H103KBN	C.CAPACITOR CH 50V 0.01U	1	
C406		ECUM1H121JCN	C.CAPACITOR CH 50V 120P	1	
C407		ERJ6GEY0R00	M.RESISTOR CH 1/10W 0	1	
C408		ECUM1H103KBN	C.CAPACITOR CH 50V 0.01U	1	
C409		ECUM1H121JCN	C.CAPACITOR CH 50V 120P	1	
C410		ECUM1H103KBN	C.CAPACITOR CH 50V 0.01U	1	
C411		ECUM1H121JCN	C.CAPACITOR CH 50V 120P	1	
C412		ECUM1H080DCN	C.CAPACITOR CH 50V 80P	1	
C413		ECUM1H120JCN	C.CAPACITOR CH 50V 12P	1	
C501		ECUM1H103KBN	C.CAPACITOR CH 50V 0.01U	1	
C502		ECEA1CU470	E.CAPACITOR 16V 47U	1	
C503		ECUM1H103KBN	C.CAPACITOR CH 50V 0.01U	1	
C504		ECEA1CU470	E.CAPACITOR 16V 47U	1	
C505		ECUM1H330JCN	C.CAPACITOR CH 50V 33P	1	
C509		ECUM1H104KBM	C.CAPACITOR CH 50V 0.1U	1	
C510		ECEA1CU470	E.CAPACITOR 16V 47U	1	

Refer to the P.C.BOARDS LIST, page 6-1-1, before using this page.

Ref.No.	Part No.	Part Name & Description	Pcs	Remarks
C511	ECUM1H104KBM	C.CAPACITOR CH 50V 0.1U	1	
C513	ECUM1H103KBN	C.CAPACITOR CH 50V 0.01U	1	
C517	ECUM1H330JCN	C.CAPACITOR CH 50V 33P	1	
C520	ECUM1H103KBN	C.CAPACITOR CH 50V 0.01U	1	
C521	ECUM1H104KBM	C.CAPACITOR CH 50V 0.1U	1	
C522	ECEA1CU470	E.CAPACITOR 16V 47U	1	
C523	ECUM1H104KBM	C.CAPACITOR CH 50V 0.1U	1	
C524	ECUM1H103KBN	C.CAPACITOR CH 50V 0.01U	1	
C525	ECEA1CU470	E.CAPACITOR 16V 47U	1	
C526	ECUM1H470JCN	C.CAPACITOR CH 50V 47P	1	
C527	ECUM1H180JCN	C.CAPACITOR CH 50V 18P	1	
C528	ECUM1H104KBM	C.CAPACITOR CH 50V 0.1U	1	
C529	ECUM1H470JCN	C.CAPACITOR CH 50V 47P	1	
C531	ECUM1H103KBN	C.CAPACITOR CH 50V 0.01U	1	
C532	ECEA1CU470	E.CAPACITOR 16V 47U	1	
C533,34	ECUM1H270JCN	C.CAPACITOR CH 50V 27P	2	
C535	ECUM1H180JCN	C.CAPACITOR CH 50V 18P	1	
C536	ECUM1H470JCN	C.CAPACITOR CH 50V 47P	1	
C537	ECUM1H104KBM	C.CAPACITOR CH 50V 0.1U	1	
C540	ECUM1H103KBN	C.CAPACITOR CH 50V 0.01U	1	
C541	ECEA1CU470	E.CAPACITOR 16V 47U	1	
C542	ECUM1H103KBN	C.CAPACITOR CH 50V 0.01U	1	
C543	ECEA1CU470	E.CAPACITOR 16V 47U	1	
C544	ECUM1H080DCN	C.CAPACITOR CH 50V 8OP	1	
C545	ECEA1CU470	E.CAPACITOR 16V 47U	1	
C548	ECUM1H104KBM	C.CAPACITOR CH 50V 0.1U	1	
C550,51	ECUM1H103KBN	C.CAPACITOR CH 50V 0.01U	2	
C552	ECUM1H820JCN	C.CAPACITOR CH 50V 82P	1	
C553	ECUM1H390JCN	C.CAPACITOR CH 50V 39P	1	
C554	ECUM1H181JCN	C.CAPACITOR CH 50V 180P	1	
C555-57	ECUM1H104KBM	C.CAPACITOR CH 50V 0.1U	3	
C558	ECEA1HN010S	E.CAPACITOR 50V 1U	1	
C559-61	ECUM1H103KBN	C.CAPACITOR CH 50V 0.01U	3	
C562	ECEA1CU100	E.CAPACITOR 16V 10U	1	
C563	ECUM1E104ZFN	C.CAPACITOR CH 25V 0.1U	1	
C564	ECUM1H103KBN	C.CAPACITOR CH 50V 0.01U	1	
C565	ECEA1CU100	E.CAPACITOR 16V 10U	1	
C566	ECUM1E104ZFN	C.CAPACITOR CH 25V 0.1U	1	
C567	ECUM1H103KBN	C.CAPACITOR CH 50V 0.01U	1	
C568	ECEA1CU100	E.CAPACITOR 16V 10U	1	
C569	ECUM1E104ZFN	C.CAPACITOR CH 25V 0.1U	1	
C570	ECUM1H103KBN	C.CAPACITOR CH 50V 0.01U	1	
C571	ECEA1CU100	E.CAPACITOR 16V 10U	1	
C572	ECUM1E104ZFN	C.CAPACITOR CH 25V 0.1U	1	
C573	ECUM1H103KBN	C.CAPACITOR CH 50V 0.01U	1	
C574	ECEA1CU100	E.CAPACITOR 16V 10U	1	
C601-04	ECUM1H222KBN	C.CAPACITOR CH 50V 2200P	4	
C605	ECEA1AKG330	E.CAPACITOR 10V 33U	1	
C606,07	ECUM1H222KBN	C.CAPACITOR CH 50V 2200P	2	
C608	ECEA1AKG330	E.CAPACITOR 10V 33U	1	
C609-14	ECUM1H222KBN	C.CAPACITOR CH 50V 2200P	6	
C615	ECEA1AKG330	E.CAPACITOR 10V 33U	1	
C616	ECUM1H222KBN	C.CAPACITOR CH 50V 2200P	1	
C617	ECEA1AKG330	E.CAPACITOR 10V 33U	1	
C618-21	ECUM1H222KBN	C.CAPACITOR CH 50V 2200P	4	
C622	ECEA1AKG330	E.CAPACITOR 10V 33U	1	
C623,24	ECUM1H222KBN	C.CAPACITOR CH 50V 2200P	2	
C626-31	ECUM1H222KBN	C.CAPACITOR CH 50V 2200P	6	
C633	ECUM1H222KBN	C.CAPACITOR CH 50V 2200P	1	
C634	ECEA1AKG330	E.CAPACITOR 10V 33U	1	
C635-38	ECUM1E104ZFN	C.CAPACITOR CH 25V 0.1U	4	
C639	ECUM1H103KBN	C.CAPACITOR CH 50V 0.01U	1	
C640	ECEA0JU101	E.CAPACITOR 6.3V 100U	1	
C641,42	ECUM1E104ZFN	C.CAPACITOR CH 25V 0.1U	2	
C643	ECEA0JU330	E.CAPACITOR 6.3V 33U	1	
C645	ECUM1H103KBN	C.CAPACITOR CH 50V 0.01U	1	
C646	ECEA0JU330	E.CAPACITOR 6.3V 33U	1	
C647	ECUM1E104ZFN	C.CAPACITOR CH 25V 0.1U	1	
C648	ECEA1HU2R2	E.CAPACITOR 50V 2.2U	1	
C649	ECUM1H103KBN	C.CAPACITOR CH 50V 0.01U	1	
C650	ECEA1CKG470	E.CAPACITOR 16V 47U	1	
C651-53	ECUM1H103KBN	C.CAPACITOR CH 50V 0.01U	3	
C655	ECUM1E104ZFN	C.CAPACITOR CH 25V 0.1U	1	
C657	ECEA1CU101	E.CAPACITOR 16V 100U	1	
C658	ECUM1H050DCN	C.CAPACITOR CH 50V 5OP	1	

Ref.No.	Part No.	Part Name & Description	Pcs	Remarks
C659	ECUM1H103KBN	C.CAPACITOR CH 50V 0.01U	1	
C660	ECEA1CU470	E.CAPACITOR 16V 47U	1	
C661	ECUM1H103KBN	C.CAPACITOR CH 50V 0.01U	1	
C662	ECEA1CU470	E.CAPACITOR 16V 47U	1	
C663	ECUM1H270JCN	C.CAPACITOR CH 50V 27P	1	
C664	ECUM1H221JCN	C.CAPACITOR CH 50V 220P	1	
C665	ECUM1H680JCN	C.CAPACITOR CH 50V 68P	1	
C666,67	ECEA1CU470	E.CAPACITOR 16V 47U	2	
C668	ECEA1CU101	E.CAPACITOR 16V 100U	1	
C679	ECUM1H470JCN	C.CAPACITOR CH 50V 47P	1	
C680-83	ECUM1H222KBN	C.CAPACITOR CH 50V 2200P	4	
C701	ECUM1H470JCN	C.CAPACITOR CH 50V 47P	1	
C702	ECUM1H103KBN	C.CAPACITOR CH 50V 0.01U	1	
C703	ECEA1CU470	E.CAPACITOR 16V 47U	1	
C704	ECUM1H331JCN	C.CAPACITOR CH 50V 330P	1	
C708	ECUM1H103KBN	C.CAPACITOR CH 50V 0.01U	1	
C709	ECEA1CU470	E.CAPACITOR 16V 47U	1	
C710	ECUM1H103KBN	C.CAPACITOR CH 50V 0.01U	1	
C711	ECUM1H102JCN	C.CAPACITOR CH 50V 1000P	1	
C712	ECUM1H820JCN	C.CAPACITOR CH 50V 82P	1	
C713,14	ECUM1H103KBN	C.CAPACITOR CH 50V 0.01U	2	
C715	ECEA1CU470	E.CAPACITOR 16V 47U	1	
C716	ECUM1H103KBN	C.CAPACITOR CH 50V 0.01U	1	
C717	ECUM1H331JCN	C.CAPACITOR CH 50V 330P	1	
C718-20	ECUM1H103KBN	C.CAPACITOR CH 50V 0.01U	3	
C721	ECQM1H122JF	P.CAPACITOR 50V 1200P	1	
C722-24	ECUM1H103KBN	C.CAPACITOR CH 50V 0.01U	3	
C725	ECEA1HN2R2S	E.CAPACITOR 50V 2.2U	1	
C726	ECEA1HNR47S	E.CAPACITOR 50V 0.47U	1	
C727	ECEA1HN010S	E.CAPACITOR 50V 1U	1	
C728	ECEA1HN2R2S	E.CAPACITOR 50V 2.2U	1	
C729	ECUM1H680JCN	C.CAPACITOR CH 50V 68P	1	
C730	ECUM1H103KBN	C.CAPACITOR CH 50V 0.01U	1	
C731	ECUM1H070DCN	C.CAPACITOR CH 50V 7P	1	
C732,33	ECUM1H103KBN	C.CAPACITOR CH 50V 0.01U	2	
C734	ECUM1H680JCN	C.CAPACITOR CH 50V 68P	1	
C735	ECUM1H471JCN	C.CAPACITOR CH 50V 470P	1	
C736	ECUM1H101JCN	C.CAPACITOR CH 50V 100P	1	
C737,38	ECEA1CU100	E.CAPACITOR 16V 10U	2	
C739	ECUM1H050DCN	C.CAPACITOR CH 50V 50P	1	
C740	ECUM1H103KBN	C.CAPACITOR CH 50V 0.01U	1	
C743,44	ECUM1H103KBN	C.CAPACITOR CH 50V 0.01U	2	
C745,46	ECUM1H102JCN	C.CAPACITOR CH 50V 1000P	2	
C749	ECUM1H103KBN	C.CAPACITOR CH 50V 0.01U	1	
C750	ECUM1H390JCN	C.CAPACITOR CH 50V 39P	1	
C751	ECEA0JU220	E.CAPACITOR 6.3V 22U	1	
C752	ECUM1H103KBN	C.CAPACITOR CH 50V 0.01U	1	
C753	ECUM1H221JCN	C.CAPACITOR CH 50V 220P	1	
C761	ECUM1H220JCN	C.CAPACITOR CH 50V 22P	1	
C762	ECUM1H050DCN	C.CAPACITOR CH 50V 50P	1	
C763,64	ECUM1H560JCN	C.CAPACITOR CH 50V 56P	2	
D1	MA151WK	DIODE	1	
D5	MA151K	DIODE	1	
D7	MA151WK	DIODE	1	
D8	MA151WA	DIODE	1	
D201,02	MA335-R	DIODE	2	
D203,04	MA704	DIODE	2	
D205	MA151K	DIODE	1	
D206	MA151WA	DIODE	1	
D207	MA151K	DIODE	1	
D501	MA151K	DIODE	1	
D502	MA151WK	DIODE	1	
D601,02	MA704	DIODE	2	
D603	1S250	DIODE	1	
D701	MA151K	DIODE	1	
D702	MA704	DIODE	1	
D703	MA151K	DIODE	1	
D704,05	MA153	DIODE	2	
D706,07	MA335-R	DIODE	2	
D708	MA151WA	DIODE	1	
D709	MA151WK	DIODE	1	
D710,11	MA151WA	DIODE	2	

Refer to the P.C.BOARDS LIST, page 6-1-1, before using this page.

Ref.No.	Part No.	Part Name & Description	Pcs	Remarks
D712	MA151K	DIODE	1	
DL1,L2	VLD0197	DELAY	2	
DL4	VLD0082	DELAY LINE	1	
DL201	VLD0082	DELAY LINE	1	
FL201,02	VLF0576	FILTER	2	
FL401	VLF0576	FILTER	1	
FL501,02	VLF0753	FILTER	2	
FL601-04	VLF0576	FILTER	4	
FL605	VLF0754	FILTER	1	
IC1	NJM4558M	IC	1	
IC2	VCR0133	IC	1	
IC3	UPD4053BG	IC	1	
IC4	AN91A12S	IC	1	
IC11	AN78M09	IC	1	
IC12	AN78L07	IC	1	
IC13	AN78N05	IC	1	
IC14	AN79N09	IC	1	
IC15	AN79M05F	IC	1	
IC201	UPD4053BG	IC	1	
IC205	AN612	IC	1	
IC206	MC74HC4053F	IC	1	
IC207	TL082CPS	IC	1	
IC209	UPD4053BG	IC	1	
IC210	NE5539D	IC	1	
IC211,12	UPD4053BG	IC	2	
IC214	AN6041	IC	1	
IC215,16	UPD4053BG	IC	2	
IC217	TL082CPS	IC	1	
IC218	UPD4053BG	IC	1	
IC219,20	TL082CPS	IC	2	
IC224	LM311M	IC	1	
IC401	TC74HC221AF	IC	1	
IC402	SN74LS221NS	IC	1	
IC403	UPD65013BC16	IC	1	
IC404	MC74HC04AF	IC	1	
IC501	TL082CPS	IC	1	
IC503	MC74HC4053F	IC	1	
IC505	AN91A12S	IC	1	
IC506	AN78N09	IC	1	
IC507	AN78N05	IC	1	
IC508	AN79N09	IC	1	
IC509	AN79N05	IC	1	
IC510	UPD4053BG	IC	1	
IC601,02	HA19211BNT	IC	2	
IC603,04	UPD41101C-1	IC	2	
IC605	MC74HC574F	IC	1	
IC606	HA19510	IC	1	
IC607	RC3415M	IC	1	
IC609	AN78L05	IC	1	
IC610	NJM2233BMA	IC	1	
IC703	SN74LS221NS	IC	1	
IC704	MC74HC157AF	IC	1	
IC705	MC74HC74AF	IC	1	
IC706	TL082CPS	IC	1	
IC707	MC74HC4053F	IC	1	
IC708	TL084CNS	IC	1	
IC709	MC74HC00AF	IC	1	
IC710	SN74LS221NS	IC	1	
IC711	MC74HC04AF	IC	1	
IC712	MC74HC14AF	IC	1	
IC713	UPD65013FC25	IC	1	
IC714	MC74HC163F	IC	1	
L1-L6	VLQEL05F101K	COIL 100UH	6	

Ref.No.	Part No.	Part Name & Description	Pcs	Remarks
L18	VLQEL05F101K	COIL 100UH	1	
L19	VLQEL05S221J	COIL 220UH	1	
L28	VLQEL05S470J	COIL 47UH	1	
L201,02	VLQEL05F101K	COIL 100UH	2	
L204-06	VLQEL05F101K	COIL 100UH	3	
L208,09	VLQEL05F101K	COIL 100UH	2	
L212	VLQEL05F101K	COIL 100UH	1	
L214	VLQEL05S180J	COIL 18UH	1	
L215	VLQEL05S4R7J	COIL 4.7UH	1	
L216	VLQEL05S181J	COIL 180UH	1	
L220,21	VLQEL05S560J	COIL 56UH	2	
L401	VLQEL05S470J	COIL 47UH	1	
L501,02	VLQEL05F101K	COIL 100UH	2	
L505	VLQEL05F101K	COIL 100UH	1	
L506	VLQEL05S470J	COIL 47UH	1	
L507	VLQEL05F101K	COIL 100UH	1	
L508	VLQEL05S470J	COIL 47UH	1	
L509,10	VLQEL05F101K	COIL 100UH	2	
L513	VLQEL05S471J	COIL 470UH	1	
L601-03	VLP0017	COIL	3	
L604	VLQEL05S221K	COIL 220UH	1	
L606,07	VLQEL05F101K	COIL 100UH	2	
L608	VLQEL05S820J	COIL 82UH	1	
L701	VLQEL05F101K	COIL 100UH	1	
L703,04	VLQEL05F101K	COIL 100UH	2	
L705	VLQEL05S3R3J	COIL 3.3UH	1	
L706	VLQEL05S1R5J	COIL 1.5UH	1	
L707	VLQEL05S560J	COIL 56UH	1	
Q1	2SC2295	TRANSISTOR CHIP	1	(B,C)
Q2	2SD601	TRANSISTOR CHIP	1	(Q,R)
Q3	2SB709	TRANSISTOR CHIP	1	(Q,R)
Q4	UN2112	TRANSISTOR-RESISTOR	1	
Q5	2SK374	TRANSISTOR	1	
Q6	2SD601	TRANSISTOR CHIP	1	(Q,R)
Q7	2SB709	TRANSISTOR CHIP	1	(Q,R)
Q8	2SD601	TRANSISTOR CHIP	1	(Q,R)
Q9	2SC2295	TRANSISTOR CHIP	1	(B,C)
Q10	2SC3757	TRANSISTOR	1	(Q,R)
Q11	2SB709	TRANSISTOR CHIP	1	(Q,R)
Q12-15	2SC2295	TRANSISTOR CHIP	4	(B,C)
Q17	2SD601	TRANSISTOR CHIP	1	(Q,R)
Q58	2SC2295	TRANSISTOR	1	(B)
Q59	2SB709	TRANSISTOR CHIP	1	(Q,R)
Q60	2SD601	TRANSISTOR CHIP	1	(Q,R)
Q61	UN2112	TRANSISTOR-RESISTOR	1	
Q62	2SD601	TRANSISTOR CHIP	1	(Q,R)
Q64	UN2212	TRANSISTOR-RESISTOR	1	
Q201,02	2SC2295	TRANSISTOR CHIP	2	(B,C)
Q203,04	2SA1022-C	TRANSISTOR CHIP	2	(B,C)
Q205	2SD601	TRANSISTOR CHIP	1	(Q,R)
Q206	2SC2295	TRANSISTOR CHIP	1	(B,C)
Q207	2SD601	TRANSISTOR CHIP	1	(Q,R)
Q209	2SC2295	TRANSISTOR CHIP	1	(B,C)
Q210	2SA1022-C	TRANSISTOR CHIP	1	(B,C)
Q212	2SC2295	TRANSISTOR CHIP	1	(B,C)
Q213	2SD601	TRANSISTOR CHIP	1	(Q,R)
Q214,15	2SB709	TRANSISTOR CHIP	2	(Q,R)
Q216	2SD601	TRANSISTOR CHIP	1	(Q,R)
Q217	2SC2295	TRANSISTOR CHIP	1	(B,C)
Q218	2SA1022-C	TRANSISTOR CHIP	1	(B,C)
Q219	2SB709	TRANSISTOR CHIP	1	(Q,R)
Q230	2SB709	TRANSISTOR CHIP	1	(Q,R)
Q231,32	2SD601	TRANSISTOR CHIP	2	(Q,R)
Q233	2SC2404	TRANSISTOR CHIP	1	(C,D)
Q234	2SB709	TRANSISTOR CHIP	1	(Q,R)
Q235,36	2SD601	TRANSISTOR CHIP	2	(Q,R)
Q237	2SC2404	TRANSISTOR CHIP	1	(C,D)
Q238,39	2SB709	TRANSISTOR CHIP	2	(Q,R)
Q240	UN2212	TRANSISTOR-RESISTOR	1	
Q241,42	2SB709	TRANSISTOR CHIP	2	(Q,R)
Q243	2SD601	TRANSISTOR CHIP	1	(Q,R)
Q401,02	UN2212	TRANSISTOR-RESISTOR	2	

Refer to the P.C.BOARDS LIST, page 6-1-1, before using this page.

Ref.No.		Part No.	Part Name & Description	Pcs	Remarks
Q501,02		2SD601	TRANSISTOR CHIP	2	(Q,R)
Q503,04		2SC2295	TRANSISTOR CHIP	2	(B,C)
Q506		2SC2295	TRANSISTOR CHIP	1	(B,C)
Q507		2SK374	TRANSISTOR	1	
Q509,10		2SD601	TRANSISTOR CHIP	2	(Q,R)
Q511,12		2SC2295	TRANSISTOR CHIP	2	(B,C)
Q514		2SC2295	TRANSISTOR CHIP	1	(B,C)
Q515		2SK374	TRANSISTOR	1	
Q517		2SB709	TRANSISTOR CHIP	1	(Q,R)
Q518,19		2SD601	TRANSISTOR CHIP	2	(Q,R)
Q520		2SB709	TRANSISTOR CHIP	1	(Q,R)
Q521		2SD601	TRANSISTOR CHIP	1	(Q,R)
Q522		2SB709	TRANSISTOR CHIP	1	(Q,R)
Q523		2SD601	TRANSISTOR CHIP	1	(Q,R)
Q525		2SA1022-C	TRANSISTOR CHIP	1	(B,C)
Q601		2SD601	TRANSISTOR CHIP	1	(Q,R)
Q602		2SA1022-C	TRANSISTOR CHIP	1	(B,C)
Q603		2SB709	TRANSISTOR CHIP	1	(Q,R)
Q604-06		2SC2295	TRANSISTOR CHIP	3	(B,C)
Q609		2SB709	TRANSISTOR CHIP	1	(Q,R)
Q701		2SD601	TRANSISTOR CHIP	1	(Q,R)
Q702		2SC2404	TRANSISTOR CHIP	1	(C,D)
Q703		2SD601	TRANSISTOR CHIP	1	(Q,R)
Q704		UN2112	TRANSISTOR-RESISTOR	1	
Q705		2SC3757	TRANSISTOR	1	(Q,R)
Q706		2SD601	TRANSISTOR CHIP	1	(Q,R)
Q707		2SC3757	TRANSISTOR	1	(Q,R)
Q708,09		2SA1226	TRANSISTOR	2	
Q710		2SC3757	TRANSISTOR	1	(Q,R)
Q711		2SB709	TRANSISTOR CHIP	1	(Q,R)
Q712		UN2212	TRANSISTOR-RESISTOR	1	
			RESISTORS		
R1		ERJ6GEYJ471	M.RESISTOR CH 1/10W 470	1	
R2,R3		ERJ6GEYG122	M.RESISTOR CH 1/10W 1.2K	2	
R4		ERJ6GEYJ332	M.RESISTOR CH 1/10W 3.3K	1	
R5,R6		ERJ6GEYJ152	M.RESISTOR CH 1/10W 1.5K	2	
R7		ERJ6GEYJ122	M.RESISTOR CH 1/10W 1.2K	1	
R8		ERJ6GEYJ332	M.RESISTOR CH 1/10W 3.3K	1	
R9		ERJ6GEYJ103	M.RESISTOR CH 1/10W 10K	1	
R10		ERJ6GEYJ103	M.RESISTOR CH 1/10W 10K	1	
R11		ERJ6GEYJ472	M.RESISTOR CH 1/10W 4.7K	1	
R12		ERJ6GEYJ224	M.RESISTOR CH 1/10W 220K	1	
R13		ERJ6GEYJ684	M.RESISTOR CH 1/10W 680K	1	
R14		ERJ6GEYJ103	M.RESISTOR CH 1/10W 10K	1	
R15		ERJ6GEYJ222	M.RESISTOR CH 1/10W 2.2K	1	
R16		ERJ6GEYJ102	M.RESISTOR CH 1/10W 1K	1	
R17		ERJ6GEYJ222	M.RESISTOR CH 1/10W 2.2K	1	
R18,19		ERJ6GEYJ333	M.RESISTOR CH 1/10W 33K	2	
R20		ERJ6GEYJ102	M.RESISTOR CH 1/10W 1K	1	
R22		ERJ6GEYJ332	M.RESISTOR CH 1/10W 3.3K	1	
R23		ERJ6GEYJ101	M.RESISTOR CH 1/10W 100	1	
R24		ERJ6GEYJ682	M.RESISTOR CH 1/10W 6.8K	1	
R25		ERJ6GEYJ101	M.RESISTOR CH 1/10W 100	1	
R26		ERJ6GEYJ1C2	M.RESISTOR CH 1/10W 1K	1	
R27		ERJ6GEYJ103	M.RESISTOR CH 1/10W 10K	1	
R28		ERJ6GEYJ182	M.RESISTOR CH 1/10W 1.8K	1	
R29		ERJ6GEYJ152	M.RESISTOR CH 1/10W 1.5K	1	
R30		ERJ6GEYJ821	M.RESISTOR CH 1/10W 820	1	
R31		ERJ6GEYJ222	M.RESISTOR CH 1/10W 2.2K	1	
R32		ERJ6GEY0R00	M.RESISTOR CH 1/10W 0	1	
R36		ERJ6GEYG181	M.RESISTOR CH 1/10W 180	1	
R37		ERJ6GEYJ471	M.RESISTOR CH 1/10W 470	1	
R38		ERJ6GEYJ102	M.RESISTOR CH 1/10W 1K	1	
R39		ERJ6GEYG181	M.RESISTOR CH 1/10W 180	1	
R40		ERJ6GEYJ221	M.RESISTOR CH 1/10W 220	1	
R42,43		ERJ6GEYJ331	M.RESISTOR CH 1/10W 330	2	
R44,45		ERJ6GEYJ681	M.RESISTOR CH 1/10W 680	2	
R46		ERJ6GEYJ102	M.RESISTOR CH 1/10W 1K	1	
R47		ERJ6GEYJ470	M.RESISTOR CH 1/10W 47	1	
R48		ERJ6GEYJ332	M.RESISTOR CH 1/10W 3.3K	1	
R79		ERJ6GEYJ332	M.RESISTOR CH 1/10W 3.3K	1	
R128		ERJ6GEYJ221	M.RESISTOR CH 1/10W 220	1	

Ref.No.		Part No.	Part Name & Description	Pcs	Remarks
R149		ERJ6GEYJ333	M.RESISTOR CH 1/10W 33K	1	
R150		ERJ6GEYJ683	M.RESISTOR CH 1/10W 68K	1	
R151		ERJ6GEYG392	M.RESISTOR CH 1/10W 3.9K	1	
R152		ERJ6GEYJ222	M.RESISTOR CH 1/10W 2.2K	1	
R153		ERJ6GEYJ331	M.RESISTOR CH 1/10W 330	1	
R154		ERJ6GEYJ223	M.RESISTOR CH 1/10W 22K	1	
R155		ERJ6GEYJ332	M.RESISTOR CH 1/10W 3.3K	1	
R156		ERJ6GEYJ223	M.RESISTOR CH 1/10W 22K	1	
R157		ERJ6GEYJ222	M.RESISTOR CH 1/10W 2.2K	1	
R158,59		ERJ6GEYJ223	M.RESISTOR CH 1/10W 22K	2	
R161		ERJ6GEYJ331	M.RESISTOR CH 1/10W 330	1	
R162		ERJ6GEYJ221	M.RESISTOR CH 1/10W 220	1	
R173		ERJ6GEYJ221	M.RESISTOR CH 1/10W 220	1	
R175		ERJ6GEYJ222	M.RESISTOR CH 1/10W 2.2K	1	
R176		ERJ6GEYJ101	M.RESISTOR CH 1/10W 100	1	
R178		ERJ6GEYJ391	M.RESISTOR CH 1/10W 390	1	
R179		ERJ6GEY0R00	M.RESISTOR CH 1/10W 0	1	
R181		ERJ6GEYJ152	M.RESISTOR CH 1/10W 1.5K	1	
R182		ERJ6GEYJ473	M.RESISTOR CH 1/10W 47K	1	
R183		ERJ6GEYJ562	M.RESISTOR CH 1/10W 5.6K	1	
R184		ERJ6GEY0R00	M.RESISTOR CH 1/10W 0	1	
R201		ERJ6GEYJ101	M.RESISTOR CH 1/10W 100	1	
R202		ERJ6GEYJ470	M.RESISTOR CH 1/10W 47	1	
R203		ERJ6GEYJ272	M.RESISTOR CH 1/10W 2.7K	1	
R204,05		ERJ6GEYJ103	M.RESISTOR CH 1/10W 10K	2	
R206		ERDS2TJ681	C.RESISTOR 1/4W 680	1	
R207		ERJ6GEYG102	M.RESISTOR CH 1/10W 1K	1	
R208		ERJ6GEYJ472	M.RESISTOR CH 1/10W 4.7K	1	
R209		ERJ6GEYJ103	M.RESISTOR CH 1/10W 10K	1	
R210,11		ERJ6GEYJ472	M.RESISTOR CH 1/10W 4.7K	2	
R212		ERJ6GEYJ182	M.RESISTOR CH 1/10W 1.8K	1	
R213		ERDS2TJ471	C.RESISTOR 1/4W 470	1	
R214,15		ERJ6GEYJ472	M.RESISTOR CH 1/10W 4.7K	2	
R216		ERJ6GEYJ561	M.RESISTOR CH 1/10W 560	1	
R217		ERJ6GEYJ222	M.RESISTOR CH 1/10W 2.2K	1	
R219		ERJ6GEYJ101	M.RESISTOR CH 1/10W 100	1	
R220		ERJ6GEYJ221	M.RESISTOR CH 1/10W 220	1	
R221		ERJ6GEYJ332	M.RESISTOR CH 1/10W 3.3K	1	
R226		ERJ6GEYJ472	M.RESISTOR CH 1/10W 4.7K	1	
R227		ERJ6GEYJ152	M.RESISTOR CH 1/10W 1.5K	1	
R228		ERJ6GEYJ122	M.RESISTOR CH 1/10W 1.2K	1	
R229		ERJ6GEYJ152	M.RESISTOR CH 1/10W 1.5K	1	
R230		ERJ6GEY0R00	M.RESISTOR CH 1/10W 0	1	
R231		ERJ6GEYJ102	M.RESISTOR CH 1/10W 1K	1	
R232		ERJ6GEYJ332	M.RESISTOR CH 1/10W 3.3K	1	
R233		ERDS2TJ562	C.RESISTOR 1/4W 5.6K	1	
R235,36		ERJ6GEYJ152	M.RESISTOR CH 1/10W 1.5K	2	
R237		ERJ6GEYJ331	M.RESISTOR CH 1/10W 330	1	
R238		ERJ6GEYJ332	M.RESISTOR CH 1/10W 3.3K	1	
R239		ERJ6GEYJ102	M.RESISTOR CH 1/10W 1K	1	
R240		ERJ6GEYJ152	M.RESISTOR CH 1/10W 1.5K	1	
R241,42		ERJ6GEYJ102	M.RESISTOR CH 1/10W 1K	2	
R246		ERJ6GEYJ184	M.RESISTOR CH 1/10W 180K	1	
R247		ERJ6GEYJ103	M.RESISTOR CH 1/10W 10K	1	
R248		ERJ6GEYJ472	M.RESISTOR CH 1/10W 4.7K	1	
R249		ERJ6GEYJ122	M.RESISTOR CH 1/10W 1.2K	1	
R250		ERJ6GEYJ331	M.RESISTOR CH 1/10W 330	1	
R251		ERJ6GEYJ472	M.RESISTOR CH 1/10W 4.7K	1	
R252		ERJ6GEYJ222	M.RESISTOR CH 1/10W 2.2K	1	
R253		ERJ6GEYJ102	M.RESISTOR CH 1/10W 1K	1	
R254		ERJ6GEYJ472	M.RESISTOR CH 1/10W 4.7K	1	
R255		ERJ6GEYJ222	M.RESISTOR CH 1/10W 2.2K	1	
R256		ERDS2TJ221	C.RESISTOR 1/4W 220	1	
R257		ERJ6GEYJ221	M.RESISTOR CH 1/10W 220	1	
R258		ERJ6GEYJ101	M.RESISTOR CH 1/10W 100	1	
R259		ERJ6GEYJ391	M.RESISTOR CH 1/10W 390	1	
R260		ERJ6GEYJ151	M.RESISTOR CH 1/10W 150	1	
R261		ERDS2TJ331	C.RESISTOR 1/4W 330	1	
R262		ERJ6GEYJ152	M.RESISTOR CH 1/10W 1.5K	1	
R264		ERJ6GEYJ470	M.RESISTOR CH 1/10W 47	1	
R265		ERJ6GEYJ103	M.RESISTOR CH 1/10W 10K	1	
R266		ERJ6GEYJ101	M.RESISTOR CH 1/10W 100	1	
R267		ERJ6GEYJ472	M.RESISTOR CH 1/10W 4.7K	1	
R295,96		ERJ6GEYJ222	M.RESISTOR CH 1/10W 2.2K	2	
R297		ERJ6GEYJ102	M.RESISTOR CH 1/10W 1K	1	

Refer to the P.C.BOARDS LIST, page 6-1-1, before using this page.

Ref.No.		Part No.	Part Name & Description	Pcs	Remarks
R298		ERJ6GEYJ470	M.RESISTOR CH 1/10W 47	1	
R299,00		ERJ6GEYJ152	M.RESISTOR CH 1/10W 1.5K	2	
R301		ERJ6GEYJ561	M.RESISTOR CH 1/10W 560	1	
R302		ERJ6GEYJ470	M.RESISTOR CH 1/10W 47	1	
R303		ERJ6GEYJ222	M.RESISTOR CH 1/10W 2.2K	1	
R304		ERJ6GEYJ332	M.RESISTOR CH 1/10W 3.3K	1	
R305		ERJ6GEYJ103	M.RESISTOR CH 1/10W 10K	1	
R306,07		ERJ6GEYJ223	M.RESISTOR CH 1/10W 22K	2	
R308		ERJ6GEYJ101	M.RESISTOR CH 1/10W 100	1	
R309		ERJ6GEYJ105	M.RESISTOR CH 1/10W 1M	1	
R310		ERJ6GEYJ472	M.RESISTOR CH 1/10W 4.7K	1	
R311		ERJ6GEYJ103	M.RESISTOR CH 1/10W 10K	1	
R312		ERJ6GEYJ101	M.RESISTOR CH 1/10W 100	1	
R313		ERJ6GEYJ472	M.RESISTOR CH 1/10W 4.7K	1	
R314		ERJ6GEYJ103	M.RESISTOR CH 1/10W 10K	1	
R315,16		ERJ6GEYJ561	M.RESISTOR CH 1/10W 560	2	
R317		ERJ6GEYJ102	M.RESISTOR CH 1/10W 1K	1	
R318		ERJ6GEYJ470	M.RESISTOR CH 1/10W 47	1	
R319		ERJ6GEYJ152	M.RESISTOR CH 1/10W 1.5K	1	
R320		ERJ6GEYJ561	M.RESISTOR CH 1/10W 560	1	
R321		ERJ6GEYJ152	M.RESISTOR CH 1/10W 1.5K	1	
R322		ERJ6GEYJ470	M.RESISTOR CH 1/10W 47	1	
R323		ERJ6GEYJ222	M.RESISTOR CH 1/10W 2.2K	1	
R324		ERJ6GEYJ332	M.RESISTOR CH 1/10W 3.3K	1	
R325		ERJ6GEYJ103	M.RESISTOR CH 1/10W 10K	1	
R326,27		ERJ6GEYJ223	M.RESISTOR CH 1/10W 22K	2	
R328		ERJ6GEYJ101	M.RESISTOR CH 1/10W 100	1	
R330		ERJ6GEYJ105	M.RESISTOR CH 1/10W 1M	1	
R331		ERJ6GEYJ472	M.RESISTOR CH 1/10W 4.7K	1	
R332		ERJ6GEYJ103	M.RESISTOR CH 1/10W 10K	1	
R333		ERJ6GEYJ101	M.RESISTOR CH 1/10W 100	1	
R334		ERJ6GEYJ472	M.RESISTOR CH 1/10W 4.7K	1	
R335		ERJ6GEYJ101	M.RESISTOR CH 1/10W 100	1	
R336		ERJ6GEYJ272	M.RESISTOR CH 1/10W 2.7K	1	
R337		ERJ6GEYJ183	M.RESISTOR CH 1/10W 18K	1	
R338,39		ERJ6GEYJ101	M.RESISTOR CH 1/10W 100	2	
R340		ERJ6GEYJ472	M.RESISTOR CH 1/10W 4.7K	1	
R341		ERJ6GEYJ332	M.RESISTOR CH 1/10W 3.3K	1	
R342-44		ERJ6GEYJ103	M.RESISTOR CH 1/10W 10K	3	
R345		ERJ6GEYJ472	M.RESISTOR CH 1/10W 4.7K	1	
R346		ERJ6GEYJ103	M.RESISTOR CH 1/10W 10K	1	
R347		ERJ6GEYJ334	M.RESISTOR CH 1/10W 330K	1	
R348		ERJ6GEYJ472	M.RESISTOR CH 1/10W 4.7K	1	
R349,50		ERJ6GEYJ103	M.RESISTOR CH 1/10W 10K	2	
R351		ERJ6GEYJ563	M.RESISTOR CH 1/10W 56K	1	
R353		ERJ6GEYJ561	M.RESISTOR CH 1/10W 560	1	
R354		ERJ6GEYJ102	M.RESISTOR CH 1/10W 1K	1	
R362		ERJ6GEYJ472	M.RESISTOR CH 1/10W 4.7K	1	
R363		ERJ6GEYJ101	M.RESISTOR CH 1/10W 100	1	
R364		ERJ6GEYJ472	M.RESISTOR CH 1/10W 4.7K	1	
R365		ERJ6GEYJ334	M.RESISTOR CH 1/10W 330K	1	
R366		ERJ6GEYJ102	M.RESISTOR CH 1/10W 1K	1	
R367		ERJ6GEYJ153	M.RESISTOR CH 1/10W 15K	1	
R374		ERJ6GEYJ562	M.RESISTOR CH 1/10W 5.6K	1	
R401		ERJ6GEYJ333	M.RESISTOR CH 1/10W 33K	1	
R402		ERJ6GEYJ153	M.RESISTOR CH 1/10W 15K	1	
R403		ERJ6GEYJ102	M.RESISTOR CH 1/10W 1K	1	
R404		ERJ6GEYJ393	M.RESISTOR CH 1/10W 39K	1	
R405,06		ERJ6GEYJ103	M.RESISTOR CH 1/10W 10K	2	
R409		ERJ6GEY0R00	M.RESISTOR CH 1/10W 0	1	
R411		ERJ6GEY0R00	M.RESISTOR CH 1/10W 0	1	
R412,13		ERJ6GEYJ222	M.RESISTOR CH 1/10W 2.2K	2	
R414		ERJ6GEY0R00	M.RESISTOR CH 1/10W 0	1	
R416		ERJ6GEYJ222	M.RESISTOR CH 1/10W 2.2K	1	
R501		ERJ6GEYJ152	M.RESISTOR CH 1/10W 1.5K	1	
R502		ERJ6GEYJ271	M.RESISTOR CH 1/10W 270	1	
R503		ERJ6GEYJ102	M.RESISTOR CH 1/10W 1K	1	
R504		ERJ6GEYJ271	M.RESISTOR CH 1/10W 270	1	
R505		ERJ6GEYJ102	M.RESISTOR CH 1/10W 1K	1	
R506		ERJ6GEYJ332	M.RESISTOR CH 1/10W 3.3K	1	
R508		ERJ6GEY0R00	M.RESISTOR CH 1/10W 0	1	
R509		ERJ6GEYJ820	M.RESISTOR CH 1/10W 82	1	
R510		ERJ6GEYG301	M.RESISTOR CH 1/10W 300	1	
R511		ERJ6GEYJ470	M.RESISTOR CH 1/10W 47	1	
R512		ERJ6GEYJ272	M.RESISTOR CH 1/10W 2.7K	1	

Ref.No.		Part No.	Part Name & Description	Pcs	Remarks
R513		ERJ6GEYJ472	M.RESISTOR CH 1/10W 4.7K	1	
R514		ERJ6GEYJ470	M.RESISTOR CH 1/10W 47	1	
R515		ERJ6GEYJ153	M.RESISTOR CH 1/10W 15K	1	
R516		ERJ6GEYJ681	M.RESISTOR CH 1/10W 680	1	
R517		ERJ6GEYJ332	M.RESISTOR CH 1/10W 3.3K	1	
R518		ERJ6GEYJ103	M.RESISTOR CH 1/10W 10K	1	
R519		ERJ6GEYJ154	M.RESISTOR CH 1/10W 150K	1	
R520		ERJ6GEYJ332	M.RESISTOR CH 1/10W 3.3K	1	
R521		ERJ6GEYJ331	M.RESISTOR CH 1/10W 330	1	
R522		ERJ6GEYJ105	M.RESISTOR CH 1/10W 1M	1	
R523		ERJ6GEYJ103	M.RESISTOR CH 1/10W 10K	1	
R524		ERJ6GEYJ472	M.RESISTOR CH 1/10W 4.7K	1	
R525		ERJ6GEYJ103	M.RESISTOR CH 1/10W 10K	1	
R526		ERJ6GEYJ152	M.RESISTOR CH 1/10W 1.5K	1	
R527		ERJ6GEYJ271	M.RESISTOR CH 1/10W 270	1	
R528		ERJ6GEYJ102	M.RESISTOR CH 1/10W 1K	1	
R529		ERJ6GEYJ332	M.RESISTOR CH 1/10W 3.3K	1	
R530		ERJ6GEYJ473	M.RESISTOR CH 1/10W 47K	1	
R531		ERJ6GEYJ820	M.RESISTOR CH 1/10W 82	1	
R532		ERJ6GEYG301	M.RESISTOR CH 1/10W 300	1	
R533,34		ERJ6GEYJ470	M.RESISTOR CH 1/10W 47	2	
R535		ERJ6GEYJ472	M.RESISTOR CH 1/10W 4.7K	1	
R536		ERJ6GEYJ153	M.RESISTOR CH 1/10W 15K	1	
R537		ERJ6GEYJ272	M.RESISTOR CH 1/10W 2.7K	1	
R538		ERJ6GEYJ681	M.RESISTOR CH 1/10W 680	1	
R539		ERJ6GEYJ332	M.RESISTOR CH 1/10W 3.3K	1	
R540		ERJ6GEYJ103	M.RESISTOR CH 1/10W 10K	1	
R541		ERJ6GEYJ154	M.RESISTOR CH 1/10W 150K	1	
R542		ERJ6GEYJ332	M.RESISTOR CH 1/10W 3.3K	1	
R543		ERJ6GEYJ331	M.RESISTOR CH 1/10W 330	1	
R544		ERJ6GEYJ103	M.RESISTOR CH 1/10W 10K	1	
R545		ERJ6GEYJ105	M.RESISTOR CH 1/10W 1M	1	
R546		ERJ6GEYJ472	M.RESISTOR CH 1/10W 4.7K	1	
R547		ERJ6GEYJ103	M.RESISTOR CH 1/10W 10K	1	
R548		ERJ6GEYJ102	M.RESISTOR CH 1/10W 1K	1	
R549		ERJ6GEYJ473	M.RESISTOR CH 1/10W 47K	1	
R550		ERJ6GEYJ393	M.RESISTOR CH 1/10W 39K	1	
R552-54		ERJ6GEYJ222	M.RESISTOR CH 1/10W 2.2K	3	
R555		ERJ6GEYJ332	M.RESISTOR CH 1/10W 3.3K	1	
R556		ERJ6GEYJ222	M.RESISTOR CH 1/10W 2.2K	1	
R557		ERJ6GEYJ182	M.RESISTOR CH 1/10W 1.8K	1	
R558		ERJ6GEYJ222	M.RESISTOR CH 1/10W 2.2K	1	
R562,63		ERJ6GEYJ222	M.RESISTOR CH 1/10W 2.2K	2	
R564		ERJ6GEYJ332	M.RESISTOR CH 1/10W 3.3K	1	
R565		ERJ6GEYJ222	M.RESISTOR CH 1/10W 2.2K	1	
R566		ERJ6GEYJ470	M.RESISTOR CH 1/10W 47	1	
R567		ERJ6GEYJ222	M.RESISTOR CH 1/10W 2.2K	1	
R569		ERJ6GEYJ222	M.RESISTOR CH 1/10W 2.2K	1	
R571		ERJ6GEYJ102	M.RESISTOR CH 1/10W 1K	1	
R572		ERJ6GEYJ181	M.RESISTOR CH 1/10W 180	1	
R573		ERJ6GEYJ750	M.RESISTOR CH 1/10W 75	1	
R574		ERJ6GEYJ102	M.RESISTOR CH 1/10W 1K	1	
R575		ERJ6GEYJ470	M.RESISTOR CH 1/10W 47	1	
R576		ERJ6GEYJ224	M.RESISTOR CH 1/10W 220K	1	
R577		ERJ6GEYJ684	M.RESISTOR CH 1/10W 680K	1	
R578		ERJ6GEYJ103	M.RESISTOR CH 1/10W 10K	1	
R579		ERJ6GEYJ222	M.RESISTOR CH 1/10W 2.2K	1	
R580		ERJ6GEYJ102	M.RESISTOR CH 1/10W 1K	1	
R581		ERJ6GEYJ222	M.RESISTOR CH 1/10W 2.2K	1	
R582-84		ERJ6GEYJ103	M.RESISTOR CH 1/10W 10K	3	
R585,86		ERJ6GEYJ470	M.RESISTOR CH 1/10W 47	2	
R587,88		ERJ6GEYJ104	M.RESISTOR CH 1/10W 100K	2	
R589		ERJ6GEYJ221	M.RESISTOR CH 1/10W 220	1	
R601,02		ERJ6GEYJ222	M.RESISTOR CH 1/10W 2.2K	2	
R603-10		ERJ6GEYJ152	M.RESISTOR CH 1/10W 1.5K	8	
R613		VRE0034E361	M.RESISTOR CH 1/10W 360	1	
R614,15		VRE0034E102	M.RESISTOR CH 1/10W 1K	2	
R616		VRE0034E272	M.RESISTOR CH 1/10W 2.7K	1	
R617		VRE0034E202	M.RESISTOR CH 1/10W 2K	1	
R618		VRE0034E152	M.RESISTOR CH 1/10W 1.5K	1	
R620		ERJ6GEYJ102	M.RESISTOR CH 1/10W 1K	1	
R621		ERJ6GEYJ103	M.RESISTOR CH 1/10W 10K	1	
R622		ERJ6GEYJ152	M.RESISTOR CH 1/10W 1.5K	1	
R623,24		ERJ6GEYG301	M.RESISTOR CH 1/10W 300	2	
R625		ERJ6GEYJ222	M.RESISTOR CH 1/10W 2.2K	1	

Refer to the P.C.BOARDS LIST, page 6-1-1, before using this page.

Ref.No.	Part No.	Part Name & Description	Pcs	Remarks
R626,27	ERJ6GEYJ681	M.RESISTOR CH 1/10W 680	2	
R628	ERJ6GEYJ472	M.RESISTOR CH 1/10W 4.7K	1	
R630	ERJ6GEYJ222	M.RESISTOR CH 1/10W 2.2K	1	
R631	ERJ6GEYJ470	M.RESISTOR CH 1/10W 47	1	
R632	ERJ6GEYJ472	M.RESISTOR CH 1/10W 4.7K	1	
R633	ERJ6GEYJ272	M.RESISTOR CH 1/10W 2.7K	1	
R634	ERJ6GEYJ822	M.RESISTOR CH 1/10W 8.2K	1	
R635	ERJ6GEYJ222	M.RESISTOR CH 1/10W 2.2K	1	
R636	ERJ6GEYJ561	M.RESISTOR CH 1/10W 560	1	
R638	ERJ6GEYJ332	M.RESISTOR CH 1/10W 3.3K	1	
R640	ERJ6GEYJ101	M.RESISTOR CH 1/10W 100	1	
R641	ERJ6GEYJ102	M.RESISTOR CH 1/10W 1K	1	
R643	ERJ6GEYJ103	M.RESISTOR CH 1/10W 10K	1	
R644	ERJ6GEYJ101	M.RESISTOR CH 1/10W 100	1	
R645	ERJ6GEYJ103	M.RESISTOR CH 1/10W 10K	1	
R646	ERJ6GEYJ101	M.RESISTOR CH 1/10W 100	1	
R647	ERJ6GEYJ222	M.RESISTOR CH 1/10W 2.2K	1	
R648	ERJ6GEYJ330	M.RESISTOR CH 1/10W 33	1	
R656	ERJ6GEYJ471	M.RESISTOR CH 1/10W 470	1	
R701	ERJ6GEYJ103	M.RESISTOR CH 1/10W 10K	1	
R702	ERJ6GEYJ682	M.RESISTOR CH 1/10W 6.8K	1	
R703	ERJ6GEYJ222	M.RESISTOR CH 1/10W 2.2K	1	
R704	ERJ6GEYJ683	M.RESISTOR CH 1/10W 68K	1	
R705	ERJ6GEYJ332	M.RESISTOR CH 1/10W 3.3K	1	
R706,07	ERJ6GEYJ562	M.RESISTOR CH 1/10W 5.6K	2	
R708,09	ERJ6GEYJ332	M.RESISTOR CH 1/10W 3.3K	2	
R710	ERJ6GEYJ392	M.RESISTOR CH 1/10W 3.9K	1	
R711	ERJ6GEYJ103	M.RESISTOR CH 1/10W 10K	1	
R712	ERJ6GEYJ472	M.RESISTOR CH 1/10W 4.7K	1	
R713	ERJ6GEYJ152	M.RESISTOR CH 1/10W 1.5K	1	
R714	ERJ6GEYJ472	M.RESISTOR CH 1/10W 4.7K	1	
R715	ERJ6GEYJ103	M.RESISTOR CH 1/10W 10K	1	
R716	ERJ6GEYJ153	M.RESISTOR CH 1/10W 15K	1	
R717,18	ERJ6GEYJ104	M.RESISTOR CH 1/10W 100K	2	
R719	ERJ6GEYJ123	M.RESISTOR CH 1/10W 12K	1	
R720	ERJ6GEYJ223	M.RESISTOR CH 1/10W 22K	1	
R721,22	ERJ6GEYJ103	M.RESISTOR CH 1/10W 10K	2	
R723	ERJ6GEYJ473	M.RESISTOR CH 1/10W 47K	1	
R724	ERJ6GEYJ104	M.RESISTOR CH 1/10W 100K	1	
R725	ERJ6GEYJ222	M.RESISTOR CH 1/10W 2.2K	1	
R726	ERJ6GEYJ472	M.RESISTOR CH 1/10W 4.7K	1	
R727	ERJ6GEYJ103	M.RESISTOR CH 1/10W 10K	1	
R728	ERJ6GEYJ102	M.RESISTOR CH 1/10W 1K	1	
R729	ERJ6GEYJ473	M.RESISTOR CH 1/10W 47K	1	
R731	ERJ6GEYJ393	M.RESISTOR CH 1/10W 39K	1	
R732	ERJ6GEYJ223	M.RESISTOR CH 1/10W 22K	1	
R733	ERJ6GEYJ152	M.RESISTOR CH 1/10W 1.5K	1	
R734	ERJ6GEYJ102	M.RESISTOR CH 1/10W 1K	1	
R735,36	ERJ6GEYJ104	M.RESISTOR CH 1/10W 100K	2	
R737	ERJ6GEYJ152	M.RESISTOR CH 1/10W 1.5K	1	
R738,39	ERJ6GEYJ103	M.RESISTOR CH 1/10W 10K	2	
R743,44	ERJ6GEY0R00	M.RESISTOR CH 1/10W 0	2	
R746,47	ERJ6GEY0R00	M.RESISTOR CH 1/10W 0	2	
R748	ERJ6GEYJ103	M.RESISTOR CH 1/10W 10K	1	
R751	ERJ6GEYJ472	M.RESISTOR CH 1/10W 4.7K	1	
R752	ERJ6GEYJ152	M.RESISTOR CH 1/10W 1.5K	1	
R753,54	ERJ6GEYJ332	M.RESISTOR CH 1/10W 3.3K	2	
R755,56	ERJ6GEYJ222	M.RESISTOR CH 1/10W 2.2K	2	
R761	ERJ6GEYJ103	M.RESISTOR CH 1/10W 10K	1	
R762	ERJ6GEYJ822	M.RESISTOR CH 1/10W 8.2K	1	
R763,64	ERJ6GEYJ102	M.RESISTOR CH 1/10W 1K	2	
R765	ERJ6GEYJ332	M.RESISTOR CH 1/10W 3.3K	1	
R766	ERJ6GEYJ470	M.RESISTOR CH 1/10W 47	1	
R769-71	ERJ6GEYJ682	M.RESISTOR CH 1/10W 6.8K	3	
SW201	VSS0126	SWITCH	1	
SW701	VSS0126	SWITCH	1	
TP3	VJR0646	TEST POINT	1	
TP201-06	VJR0646	TEST POINT	6	
TP401-05	VJR0646	TEST POINT	5	

Ref.No.	Part No.	Part Name & Description	Pcs	Remarks
TP501,02	VJR0646	TEST POINT	2	
TP504	VJR0646	TEST POINT	1	
TP601	VJR0646	TEST POINT	1	
TP701-04	VJR0646	TEST POINT	4	
TPG201	VJR0646	TEST POINT	1	
TPG501,02	VJR0646	TEST POINT	2	
VC201	ECV1ZW50X53T	V.CAPACITOR 50P	1	
VC401	ECV1ZW10X53T	V.CAPACITOR 10P	1	
VL701	VLQ0415	COIL	1	
VR1	VRV0109B501	V.RESISTOR 500	1	
VR11	VRV0109B102	V.RESISTOR 1K	1	
VR201-03	VRV0109B501	V.RESISTOR 500	3	
VR204,05	VRV0109B202	V.RESISTOR 2K	2	
VR206,07	VRV0109B102	V.RESISTOR 1K	2	
VR212	VRV0109B102	V.RESISTOR 1K	1	
VR213	VRV0109B202	V.RESISTOR 2K	1	
VR214	VRV0109B102	V.RESISTOR 1K	1	
VR215	VRV0109B202	V.RESISTOR 2K	1	
VR216,17	VRV0109B203	V.RESISTOR 20K	2	
VR218	VRV0064B502	V.RESISTOR 5K	1	
VR401	VRV0109B102	V.RESISTOR 1K	1	
VR403	VRV0109B103	V.RESISTOR 10K	1	
VR501,02	VRV0109B202	V.RESISTOR 2K	2	
VR503,04	VRV0109B102	V.RESISTOR 1K	2	
VR505	VRV0109B202	V.RESISTOR 2K	1	
VR601,02	VRV0064B201	V.RESISTOR 200	2	
VR603,04	VRV0109B102	V.RESISTOR 1K	2	
VR701	VRV0109B202	V.RESISTOR 2K	1	
VR702-04	VRV0109B502	V.RESISTOR 5K	3	
X201	VSX0270	CRYSTAL OSCILLATOR	1	
X701	VSX0149	CRYSTAL OSCILLATOR	1	
		MISCELLANEOUS		
	VML2143	CARD PULLER	1	
	VML2144	CARD PULLER	1	
	VMS4174	PIN	6	
	VMZ1547	BARRIER	1	
	VSC1871	SHIELD CASE	1	
	VSC1872	SHIELD CASE	1	
	VSC3056	SHIELD CASE	1	
	VXA3966	P.C.B. SHIELD PLATE	1	
	XNG26E	NUT	4	
	XYNV3+K6FR	SCREW	6	
	XYN26+C12	SCREW	4	

Refer to the P.C.BOARDS LIST, page 6-1-1, before using this page.

Ref.No.		Part No.	Part Name & Description	Pcs	Remarks
	■	VEP82061A	P.C.BOARD W/COMPONENT		FOR AU-65-P
			W5 SERVO		
			CAPACITORS		
C1		ECQM1H273JF	P.CAPACITOR 50V 0.027U	1	
C2		ECUM1H152JN	C.CAPACITOR CH 50V 1500P	1	
C3,C4		ECUM1H101JCN	C.CAPACITOR CH 50V 100P	2	
C5		ECEA1CU100	E.CAPACITOR 16V 10U	1	
C6		ECEA0JU101	E.CAPACITOR 6.3V 100U	1	
C7		ECEA1AU470	E.CAPACITOR 10V 47U	1	
C8		ECUM1H103ZFN	C.CAPACITOR CH 50V 0.01U	1	
C9		ECQM1H154JF	P.CAPACITOR 50V 0.15U	1	
C10		ECEA1HN2R2S	E.CAPACITOR 50V 2.2U	1	
C11		ECQM1H223JF	P.CAPACITOR 50V 0.022U	1	
C13		ECQP1H822JZ	P.CAPACITOR 50V 8200P	1	
C14		ECQM1H682JV	P.CAPACITOR 50V 6800P	1	
C15,16		ECUM1H103ZFN	C.CAPACITOR CH 50V 0.01U	2	
C17		ECQM1H394JV	P.CAPACITOR 50V 0.39U	1	
C18		ECEA1HU4R7	E.CAPACITOR 50V 4.7U	1	
C19		ECEA1AU470	E.CAPACITOR 10V 47U	1	
C20,21		ECUM1H103ZFN	C.CAPACITOR CH 50V 0.01U	2	
C22		ECEA1HU2R2	E.CAPACITOR 50V 2.2U	1	
C23,24		ECUM1E104ZFN	C.CAPACITOR CH 25V 0.1U	2	
C25		ECUM1H103ZFN	C.CAPACITOR CH 50V 0.01U	1	
C26		ECEA1AU470	E.CAPACITOR 10V 47U	1	
C27		ECUM1H103ZFN	C.CAPACITOR CH 50V 0.01U	1	
C28		ECEA1AU470	E.CAPACITOR 10V 47U	1	
C29		ECEA1AU330	E.CAPACITOR 10V 33U	1	
C30		ECUM1H103ZFN	C.CAPACITOR CH 50V 0.01U	1	
C31		ECEA1AU330	E.CAPACITOR 10V 33U	1	
C32		ECEA1AU470	E.CAPACITOR 10V 47U	1	
C33		ECUM1H103ZFN	C.CAPACITOR CH 50V 0.01U	1	
C34		ECEA1AU470	E.CAPACITOR 10V 47U	1	
C39		ECUM1H331JCN	C.CAPACITOR CH 50V 330P	1	
C40-42		ECUM1H103ZFN	C.CAPACITOR CH 50V 0.01U	3	
C43		ECUM1H101JCN	C.CAPACITOR CH 50V 100P	1	
C46		ECEA1CU470	E.CAPACITOR 16V 47U	1	
C47,48		ECUM1E104ZFN	C.CAPACITOR CH 25V 0.1U	2	
C101		ECQM1H104JF	P.CAPACITOR 50V 0.1U	1	
C102		ECUM1H151JCN	C.CAPACITOR CH 50V 150P	1	
C103		ECEA1CU470	E.CAPACITOR 16V 47U	1	
C104		ECEA1HU2R2	E.CAPACITOR 50V 2.2U	1	
C105		ECEA1CU101	E.CAPACITOR 16V 100U	1	
C106		ECQM1H104JF	P.CAPACITOR 50V 0.1U	1	
C107		ECUM1H151JCN	C.CAPACITOR CH 50V 150P	1	
C108		ECUM1H102JCN	C.CAPACITOR CH 50V 1000P	1	
C109		ECUM1H221JCN	C.CAPACITOR CH 50V 220P	1	
C110		ECQM1H103JF	P.CAPACITOR 50V 0.01U	1	
C111		ECEA1HU010	E.CAPACITOR 50V 1U	1	
C112		ECQM1H154JF	P.CAPACITOR 50V 0.15U	1	
C113		ECEA1HU010	E.CAPACITOR 50V 1U	1	
C114		ECEA1CU470	E.CAPACITOR 16V 47U	1	
C115		ECUM1H103ZFN	C.CAPACITOR CH 50V 0.01U	1	
C116		ECEA1CU470	E.CAPACITOR 16V 47U	1	
C117		ECUM1H103ZFN	C.CAPACITOR CH 50V 0.01U	1	
C118		ECEA1CU470	E.CAPACITOR 16V 47U	1	
C119		ECUM1H103ZFN	C.CAPACITOR CH 50V 0.01U	1	
C120		ECEA1CU470	E.CAPACITOR 16V 47U	1	
C121		ECUM1H103ZFN	C.CAPACITOR CH 50V 0.01U	1	
C122		ECEA1CU470	E.CAPACITOR 16V 47U	1	
C123		ECUM1H330JCN	C.CAPACITOR CH 50V 33P	1	
C124		ECUM1H103ZFN	C.CAPACITOR CH 50V 0.01U	1	
C125		ECEA1CU470	E.CAPACITOR 16V 47U	1	
C126		ECQM1H562JF	P.CAPACITOR 50V 5600P	1	
C127		ECQM1H393JF	P.CAPACITOR 50V 0.039U	1	
C128		ECQM1H104JF	P.CAPACITOR 50V 0.1U	1	
C129		ECEA1OM22	E.CAPACITOR 10V 22U	1	
C130		ECEA1HU010	E.CAPACITOR 50V 1U	1	

Ref.No.		Part No.	Part Name & Description	Pcs	Remarks
C131		ECEA1EN220S	E.CAPACITOR 25V 22U	1	
C132		ECQM1H103JF	P.CAPACITOR 50V 0.01U	1	
C133-36		ECUM1H103ZFN	C.CAPACITOR CH 50V 0.01U	4	
C137		ECEA1CU101	E.CAPACITOR 16V 100U	1	
C138		ECEA1CU470	E.CAPACITOR 16V 47U	1	
C139		ECQM1H822JF	P.CAPACITOR 50V 8200P	1	
C140		ECUM1H102JCN	C.CAPACITOR CH 50V 1000P	1	
C141		ECEA1HN010S	E.CAPACITOR 50V 1U	1	
C142		ECEA1CU101	E.CAPACITOR 16V 100U	1	
C143		ECEA1CU470	E.CAPACITOR 16V 47U	1	
C144		ECEA1CU220	E.CAPACITOR 16V 22U	1	
C145		ECEA1AU470	E.CAPACITOR 10V 47U	1	
C146		ECUM1H103ZFN	C.CAPACITOR CH 50V 0.01U	1	
C147		ECEA1HUR47	E.CAPACITOR 50V 0.47U	1	
C148		ECEA1CU470	E.CAPACITOR 16V 47U	1	
C149,50		ECUM1H103ZFN	C.CAPACITOR CH 50V 0.01U	2	
C151		ECEA1HN010S	E.CAPACITOR 50V 1U	1	
C152,53		ECUM1H103ZFN	C.CAPACITOR CH 50V 0.01U	2	
C154		ECUM1H152KBN	C.CAPACITOR CH 50V 1500P	1	
C155		ECEA1HN100S	E.CAPACITOR 50V 10U	1	
C156		ECEA1HUR47	E.CAPACITOR 50V 0.47U	1	
C157,58		ECUM1H103ZFN	C.CAPACITOR CH 50V 0.01U	2	
C159		ECQM1H104JF	P.CAPACITOR 50V 0.1U	1	
C160		ECUM1H103ZFN	C.CAPACITOR CH 50V 0.01U	1	
C161		ECQM1H104JF	P.CAPACITOR 50V 0.1U	1	
C162,63		ECQM1H103JF	P.CAPACITOR 50V 0.01U	2	
C164		ECEA1HU4R7	E.CAPACITOR 50V 4.7U	1	
C165-67		ECUM1H103ZFN	C.CAPACITOR CH 50V 0.01U	3	
C168		ECEA1EU100	E.CAPACITOR 25V 10U	1	
C169		ECQM1H103JF	P.CAPACITOR 50V 0.01U	1	
C170		ECUM1H471JCN	C.CAPACITOR CH 50V 470P	1	
C171,72		ECUM1H103ZFN	C.CAPACITOR CH 50V 0.01U	2	
C173		ECUM1H101JCN	C.CAPACITOR CH 50V 100P	1	
C174		ECUM1H103ZFN	C.CAPACITOR CH 50V 0.01U	1	
C175		ECEA1HU2R2	E.CAPACITOR 50V 2.2U	1	
C176		ECEA1CU470	E.CAPACITOR 16V 47U	1	
C177		ECQM1H222JF	P.CAPACITOR 50V 2200P	1	
C179		ECUM1H221JCN	C.CAPACITOR CH 50V 220P	1	
C301		ECEA1AU330	E.CAPACITOR 10V 33U	1	
C302		ECUM1H103ZFN	C.CAPACITOR CH 50V 0.01U	1	
C303		ECQM1H562JF	P.CAPACITOR 50V 5600P	1	
C304		ECQM1H392JF	P.CAPACITOR 50V 3900P	1	
C305		ECUM1H103ZFN	C.CAPACITOR CH 50V 0.01U	1	
C306		ECQM1H123JF	P.CAPACITOR 50V 0.012U	1	
C307		ECEA1CN470S	E.CAPACITOR 16V 47U	1	
C308		ECEA0JU221	E.CAPACITOR 6.3V 220U	1	
C309		ECEA1HU2R2	E.CAPACITOR 50V 2.2U	1	
C310		ECQM1H104JF	P.CAPACITOR 50V 0.1U	1	
C311		ECUM1H153KBN	C.CAPACITOR CH 50V 0.015U	1	
C312		ECEA1HN010S	E.CAPACITOR 50V 1U	1	
C313,14		ECUM1H103ZFN	C.CAPACITOR CH 50V 0.01U	2	
C315		ECQM1H104JF	P.CAPACITOR 50V 0.1U	1	
C316		ECUM1E273KBN	C.CAPACITOR CH 25V 0.027U	1	
C317		ECEA1HN2R2S	E.CAPACITOR 50V 2.2U	1	
C318-20		ECUM1H103ZFN	C.CAPACITOR CH 50V 0.01U	3	
C321		ECEA1CU100	E.CAPACITOR 16V 10U	1	
C322		ECEA0JU470	E.CAPACITOR 6.3V 47U	1	
C323		ECUM1H103ZFN	C.CAPACITOR CH 50V 0.01U	1	
C324		ECEA0JU102	E.CAPACITOR 6.3V 1000U	1	
C327		ECEA1HU2R2	E.CAPACITOR 50V 2.2U	1	
C330-36		ECUM1H103ZFN	C.CAPACITOR CH 50V 0.01U	7	
C338,39		ECEA1CU100	E.CAPACITOR 16V 10U	2	
C342		ECQM1H104JF	P.CAPACITOR 50V 0.1U	1	
C401-03		ECUM1H103ZFN	C.CAPACITOR CH 50V 0.01U	3	
C406		ECUM1H103ZFN	C.CAPACITOR CH 50V 0.01U	1	
C408-10		ECUM1H103ZFN	C.CAPACITOR CH 50V 0.01U	3	
C454		ECUM1H103ZFN	C.CAPACITOR CH 50V 0.01U	1	
C492		ECUM1H103ZFN	C.CAPACITOR CH 50V 0.01U	1	
C495,96		ECUM1H103ZFN	C.CAPACITOR CH 50V 0.01U	2	
C501		ECUM1H103ZFN	C.CAPACITOR CH 50V 0.01U	1	
C502		ECEA1CU470	E.CAPACITOR 16V 47U	1	
C503		ECEA1ESS471	E.CAPACITOR 25V 470U	1	
C504		ECUM1E473KBN	C.CAPACITOR CH 25V 0.047U	1	
C505		ECUM1H561JCN	C.CAPACITOR CH 50V 560P	1	
C506		ECUM1H820JCN	C.CAPACITOR CH 50V 82P	1	

Refer to the P.C.BOARDS LIST, page 6-1-1, before using this page.

Ref.No.		Part No.	Part Name & Description	Pcs	Remarks
C507		ECUM1H561JCN	C.CAPACITOR CH 50V 560P	1	
C508		ECEA1HU010	E.CAPACITOR 50V 1U	1	
C509-13		ECEA1ESS101	E.CAPACITOR 25V 100U	5	
C514		ECQM1H104JF	P.CAPACITOR 50V 0.1U	1	
C515		ECEA1EU4R7	E.CAPACITOR 25V 4.7U	1	
C516-18		ECEA1HN4R7S	E.CAPACITOR 50V 4.7U	3	
C519		ECEA1HU010	E.CAPACITOR 50V 1U	1	
C520-22		ECUM1H103KBN	C.CAPACITOR CH 50V 0.01U	3	
C523		ECQM1H104JF	P.CAPACITOR 50V 0.1U	1	
C524		ECEA1EU4R7	E.CAPACITOR 25V 4.7U	1	
C525,26		ECEA1HN4R7S	E.CAPACITOR 50V 4.7U	2	
C527		ECQM1H104JF	P.CAPACITOR 50V 0.1U	1	
C528		ECEA1HU010	E.CAPACITOR 50V 1U	1	
C529-31		ECUM1H103KBN	C.CAPACITOR CH 50V 0.01U	3	
C532		ECEA1EU4R7	E.CAPACITOR 25V 4.7U	1	
C533,34		ECEA1HN4R7S	E.CAPACITOR 50V 4.7U	2	
C535		ECQM1H104JF	P.CAPACITOR 50V 0.1U	1	
C536		ECEA1HU010	E.CAPACITOR 50V 1U	1	
C537-39		ECUM1H103KBN	C.CAPACITOR CH 50V 0.01U	3	
C540		ECEA1EU4R7	E.CAPACITOR 25V 4.7U	1	
C541-43		ECEA1HN4R7S	E.CAPACITOR 50V 4.7U	3	
C544		ECQM1H104JF	P.CAPACITOR 50V 0.1U	1	
C545		ECEA1HU010	E.CAPACITOR 50V 1U	1	
C546-48		ECUM1H103KBN	C.CAPACITOR CH 50V 0.01U	3	
C549		ECEA1AU470	E.CAPACITOR 10V 47U	1	
C550		ECUM1E473KBN	C.CAPACITOR CH 25V 0.047U	1	
C551		ECEA1HN4R7S	E.CAPACITOR 50V 4.7U	1	
C552		ECQM1H104JF	P.CAPACITOR 50V 0.1U	1	
C553		ECEA1HN4R7S	E.CAPACITOR 50V 4.7U	1	
C558-63		ECQM1H104JF	P.CAPACITOR 50V 0.1U	6	
C902-06		ECUM1H103ZFN	C.CAPACITOR CH 50V 0.01U	5	
C909		ECUM1H103ZFN	C.CAPACITOR CH 50V 0.01U	1	
D1		MA151K	DIODE	1	
D4		MA151K	DIODE	1	
D101		MA151K	DIODE	1	
D102		MA153	DIODE	1	
D103		MA151WK	DIODE	1	
D104		MA151K	DIODE	1	
D105		MA151WK	DIODE	1	
D106,07		MA151WA	DIODE	2	
D108		MA151K	DIODE	1	
D109		MA151WK	DIODE	1	
D110,11		MA153	DIODE	2	
D112		MA151WK	DIODE	1	
D113,14		MA151K	DIODE	2	
D115		MA153	DIODE	1	
D116		MA151K	DIODE	1	
D119		MA151WK	DIODE	1	
D120-22		MA151WA	DIODE	3	
D123		MA151K	DIODE	1	
D125		MA151K	DIODE	1	
D126,27		MA153	DIODE	2	
D128		MA151WA	DIODE	1	
D129		MA151K	DIODE	1	
D301,02		MA151K	DIODE	2	
D303		MA151WK	DIODE	1	
D304		MA151WA	DIODE	1	
D305		MA151K	DIODE	1	
D307		MA151WA	DIODE	1	
D309		MA151WK	DIODE	1	
D310		MA151K	DIODE	1	
D313		MA151WA	DIODE	1	
D314-17		MA151WK	DIODE	4	
D318		MA151K	DIODE	1	
D319,20		MA151WK	DIODE	2	
D321,22		MA151K	DIODE	2	
D323,24		MA151WK	DIODE	2	
D325		MA151K	DIODE	1	
D330		MA151K	DIODE	1	
D333		MA151WK	DIODE	1	
D334-38		MA151K	DIODE	5	
D340		MA151WA	DIODE	1	

Ref.No.		Part No.	Part Name & Description	Pcs	Remarks
D341		MA151K	DIODE	1	
D345,46		MA151WA	DIODE	2	
D349		MA151WK	DIODE	1	
D351		MA151K	DIODE	1	
D501		MA151K	DIODE	1	
D502		MA151WK	DIODE	1	
D503		MA153	DIODE	1	
D504		MA151WK	DIODE	1	
D505,06		MA151K	DIODE	2	
D507		MA151WK	DIODE	1	
D508,09		MA151K	DIODE	2	
D510		MA151WK	DIODE	1	
D511		MA151K	DIODE	1	
D514-17		MA701A	DIODE	4	
D572		MA151K	DIODE	1	
IC1		LM2904M	IC	1	
IC2		LM2903M	IC	1	
IC3		LM2904M	IC	1	
IC4		NJM4558M	IC	1	
IC5		MC14538BF	IC	1	
IC6		UPD65031F405	IC	1	
IC7		MN53015VZW	IC	1	
IC8		MC14049UBF	IC	1	
IC9		MC14013BF	IC	1	
IC10		MM74HC221AM	IC	1	
IC11		AN78L05	IC	1	
IC12		MC14021BF	IC	1	
IC13		MC14094BF	IC	1	
IC14		MC14053BF	IC	1	(R)
IC15		MC14049UBF	IC	1	
IC16		MC14050BF	IC	1	
IC17		SN74LS01NS	IC	1	
IC18		MN51020VZZ	IC	1	
IC101		LM2904M	IC	1	
IC102		LM2903M	IC	1	
IC103		LM2904M	IC	1	
IC104		MC14538BF	IC	1	
IC105		AN79L09	IC	1	
IC106		AN78N09	IC	1	
IC107		DN74LS293S	IC	1	
IC108		MC74HC00AF	IC	1	
IC109		MN6064R	IC	1	
IC110		MN6168VIA	IC	1	
IC111		MC74HCU04F	IC	1	
IC112		MC14049UBF	IC	1	
IC113,14		LM2904M	IC	2	
IC115		LM2903M	IC	1	
IC116,17		LM2904M	IC	2	
IC118-20		MC14066BF	IC	3	
IC121		MC14052BF	IC	1	
IC122,23		MC14053BF	IC	2	(R)
IC124		MN53030VYA	IC	1	
IC125		MN53007VYC	IC	1	
IC126		UPC4558G	IC	1	
IC128		NJM4558M	IC	1	
IC129		MC14538BF	IC	1	
IC130		MC14013BF	IC	1	
IC131		LM2904M	IC	1	
IC132		UPC4558G	IC	1	
IC133		MN4030BS	IC	1	
IC134		MC14538BF	IC	1	
IC135		MC14053BF	IC	1	(R)
IC136		MC74HC02AF	IC	1	
IC137		MC14538BF	IC	1	
IC301		AN78L05	IC	1	
IC302		LM2904M	IC	1	
IC303		LM2902M	IC	1	
IC304		MC14053BF	IC	1	(R)
IC305		MC14066BF	IC	1	
IC306		LM2904M	IC	1	
IC307		LM2902M	IC	1	
IC308,09		LM2904M	IC	2	

Refer to the P.C.BOARDS LIST, page 6-1-1, before using this page.

Ref.No.	Part No.	Part Name & Description	Pcs	Remarks
IC310-13	MC14066BF	IC	4	
IC314	MC14028BF	IC	1	
IC315	MC14081BF	IC	1	
IC316	NJM2901M	IC	1	
IC318	MC14538BF	IC	1	
IC319	MC14049UBF	IC	1	
IC501	BA6149LS	IC	1	
IC502	PU4213	IC	1	
IC503-06	AN3821K	IC	4	
IC800	LM2904M	IC	1	
L1	VLP0017	COIL	1	
L2-L4	VLQEL05S221J	COIL 220UH	3	
L101,02	VLQEL05S221J	COIL 220UH	2	
L501	VLQ0214	COIL 50UH	1	
L504-07	VLQ0129	COIL 300UH	4	
Q1,Q2	UN2213	TRANSISTOR-RESISTOR	2	
Q5-Q9	UN2213	TRANSISTOR-RESISTOR	5	
Q12-16	UN2213	TRANSISTOR-RESISTOR	5	
Q101	2SD601	TRANSISTOR CHIP	1	(Q,R)
Q102	UN2213	TRANSISTOR-RESISTOR	1	
Q103	2SJ43	TRANSISTOR	1	
Q104	UN2213	TRANSISTOR-RESISTOR	1	
Q105	2SD601	TRANSISTOR CHIP	1	(Q,R)
Q106-08	UN2213	TRANSISTOR-RESISTOR	3	
Q109	2SD601	TRANSISTOR CHIP	1	(Q,R)
Q110-19	UN2213	TRANSISTOR-RESISTOR	10	
Q120	2SD601	TRANSISTOR CHIP	1	(Q,R)
Q121	UN2213	TRANSISTOR-RESISTOR	1	
Q122	2SD601	TRANSISTOR CHIP	1	(Q,R)
Q123,24	UN2213	TRANSISTOR-RESISTOR	2	
Q125	2SB709	TRANSISTOR CHIP	1	(Q,R)
Q126	2SD601	TRANSISTOR CHIP	1	(Q,R)
Q127	UN2115	COMBINATION PARTS	1	
Q128	UN2213	TRANSISTOR-RESISTOR	1	
Q129	UN2214	TRANSISTOR-RESISTOR	1	
Q130	2SK374	TRANSISTOR	1	
Q131-33	UN2213	TRANSISTOR-RESISTOR	3	
Q134,35	2SB709	TRANSISTOR CHIP	2	(Q,R)
Q136-39	UN2213	TRANSISTOR-RESISTOR	4	
Q301,02	UN2213	TRANSISTOR-RESISTOR	2	
Q303	UN2113	TRANSISTOR-RESISTOR	1	
Q304	UN2213	TRANSISTOR-RESISTOR	1	
Q305	UN2113	TRANSISTOR-RESISTOR	1	
Q306-09	UN2213	TRANSISTOR-RESISTOR	4	
Q312-14	UN2213	TRANSISTOR-RESISTOR	3	
Q316	2SD601	TRANSISTOR CHIP	1	(Q,R)
Q317	UN2213	TRANSISTOR-RESISTOR	1	
Q319	2SD601	TRANSISTOR CHIP	1	(Q,R)
Q320	UN2213	TRANSISTOR-RESISTOR	1	
Q336,37	UN2213	TRANSISTOR-RESISTOR	2	
Q340	UN2213	TRANSISTOR-RESISTOR	1	
Q343	UN2213	TRANSISTOR-RESISTOR	1	
Q346,47	UN2213	TRANSISTOR-RESISTOR	2	
Q501-04	2SB709	TRANSISTOR CHIP	4	(Q,R)
Q505	UN2113	TRANSISTOR-RESISTOR	1	
Q506	UN2213	TRANSISTOR-RESISTOR	1	
Q507	UN2113	TRANSISTOR-RESISTOR	1	
Q508,09	UN2213	TRANSISTOR-RESISTOR	2	
		RESISTORS		
R1	ERJ6GEYJ103	M.RESISTOR CH 1/10W 10K	1	
R2	ERJ6GEYJ683	M.RESISTOR CH 1/10W 68K	1	
R3	ERJ6GEYJ103	M.RESISTOR CH 1/10W 10K	1	
R4	ERJ6GEYJ105	M.RESISTOR CH 1/10W 1M	1	
R5,R6	ERJ6GEYJ103	M.RESISTOR CH 1/10W 10K	2	
R7	ERJ6GEYJ155	M.RESISTOR CH1/10W 1.5M	1	
R8	ERJ6GEYJ103	M.RESISTOR CH 1/10W 10K	1	

Ref.No.	Part No.	Part Name & Description	Pcs	Remarks
R9	ERJ6GEYJ125	M.RESISTOR CH1/10W 1.2M	1	
R10	ERJ6GEYJ563	M.RESISTOR CH 1/10W 56K	1	
R11,12	VRE0034E102	M.RESISTOR CH 1/10W 1K	2	
R13	ERJ6GEYJ123	M.RESISTOR CH1/10W 12K	1	
R14	ERJ6GEYJ823	M.RESISTOR CH 1/10W 82K	1	
R15	ERJ6GEYJ393	M.RESISTOR CH 1/10W 39K	1	
R16	ERJ6GEYJ564	M.RESISTOR CH 1/10W 560K	1	
R17	ERJ6GEYJ822	M.RESISTOR CH 1/10W 8.2K	1	
R18,19	ERJ6GEYJ183	M.RESISTOR CH 1/10W 18K	2	
R20	ERJ6GEYJ822	M.RESISTOR CH 1/10W 8.2K	1	
R21	ERJ6GEYJ104	M.RESISTOR CH 1/10W 100K	1	
R22	ERJ6GEYJ472	M.RESISTOR CH 1/10W 4.7K	1	
R23	ERJ6GEYJ103	M.RESISTOR CH 1/10W 10K	1	
R24	ERJ6GEYJ563	M.RESISTOR CH 1/10W 56K	1	
R25	ERJ6GEYJ102	M.RESISTOR CH 1/10W 1K	1	
R27	ERJ6GEYJ103	M.RESISTOR CH 1/10W 10K	1	
R28-31	ERJ6GEYJ563	M.RESISTOR CH 1/10W 56K	4	
R34,35	ERJ6GEYJ103	M.RESISTOR CH 1/10W 10K	2	
R36	ERJ6GEYJ562	M.RESISTOR CH 1/10W 5.6K	1	
R37-44	ERJ6GEYJ563	M.RESISTOR CH 1/10W 56K	8	
R45	ERJ6GEYJ104	M.RESISTOR CH 1/10W 100K	1	
R50	ERJ6GEYJ563	M.RESISTOR CH 1/10W 56K	1	
R51	ERJ6GEYJ103	M.RESISTOR CH 1/10W 10K	1	
R52	ERJ6GEYJ474	M.RESISTOR CH 1/10W 470K	1	
R53	ERJ6GEYJ563	M.RESISTOR CH 1/10W 56K	1	
R54	ERJ6GEYJ103	M.RESISTOR CH 1/10W 10K	1	
R55	ERJ6GEYJ474	M.RESISTOR CH 1/10W 470K	1	
R56	ERJ6GEYJ563	M.RESISTOR CH 1/10W 56K	1	
R57	ERJ6GEYJ103	M.RESISTOR CH 1/10W 10K	1	
R58	ERJ6GEYJ474	M.RESISTOR CH 1/10W 470K	1	
R59	ERJ6GEYJ103	M.RESISTOR CH 1/10W 10K	1	
R60	ERJ6GEYJ102	M.RESISTOR CH 1/10W 1K	1	
R61	ERJ6GEYJ223	M.RESISTOR CH 1/10W 22K	1	
R62	ERJ6GEYJ103	M.RESISTOR CH 1/10W 10K	1	
R64	ERJ6GEYJ153	M.RESISTOR CH 1/10W 15K	1	
R65	ERJ6GEYJ683	M.RESISTOR CH 1/10W 68K	1	
R69,70	ERJ6GEYJ102	M.RESISTOR CH 1/10W 1K	2	
R101	ERJ6GEYJ103	M.RESISTOR CH 1/10W 10K	1	
R102	ERJ6GEYJ184	M.RESISTOR CH1/10W 180K	1	
R103	ERJ6GEYJ102	M.RESISTOR CH 1/10W 1K	1	
R104	ERJ6GEYJ474	M.RESISTOR CH 1/10W 470K	1	
R105-07	ERJ6GEYJ103	M.RESISTOR CH 1/10W 10K	3	
R108	ERJ6GEYJ184	M.RESISTOR CH1/10W 180K	1	
R109	ERJ6GEYJ102	M.RESISTOR CH 1/10W 1K	1	
R110	ERJ6GEYJ474	M.RESISTOR CH 1/10W 470K	1	
R111	ERJ6GEYJ103	M.RESISTOR CH 1/10W 10K	1	
R112	ERJ6GEYJ153	M.RESISTOR CH 1/10W 15K	1	
R113	ERJ6GEYJ562	M.RESISTOR CH 1/10W 5.6K	1	
R114	ERJ6GEYJ224	M.RESISTOR CH 1/10W 220K	1	
R115	ERJ6GEYJ682	M.RESISTOR CH 1/10W 6.8K	1	
R116	ERJ6GEYJ153	M.RESISTOR CH 1/10W 15K	1	
R117	ERJ6GEYJ104	M.RESISTOR CH 1/10W 100K	1	
R118	ERJ6GEYJ103	M.RESISTOR CH 1/10W 10K	1	
R119	ERJ6GEYJ153	M.RESISTOR CH 1/10W 15K	1	
R120	ERJ6GEYJ152	M.RESISTOR CH 1/10W 1.5K	1	
R121,22	ERJ6GEYJ103	M.RESISTOR CH 1/10W 10K	2	
R123	ERJ6GEYJ105	M.RESISTOR CH 1/10W 1M	1	
R124	ERJ6GEYJ272	M.RESISTOR CH 1/10W 2.7K	1	
R125	ERJ6GEYJ103	M.RESISTOR CH 1/10W 10K	1	
R126-32	ERJ6GEYJ563	M.RESISTOR CH 1/10W 56K	7	
R133,34	ERJ6GEYJ103	M.RESISTOR CH 1/10W 10K	2	
R135,36	ERJ6GEYJ563	M.RESISTOR CH 1/10W 56K	2	
R137	ERJ6GEYJ103	M.RESISTOR CH 1/10W 10K	1	
R138	ERJ6GEYJ563	M.RESISTOR CH 1/10W 56K	1	
R139	ERJ6GEYJ224	M.RESISTOR CH 1/10W 220K	1	
R140	ERJ6GEYJ563	M.RESISTOR CH 1/10W 56K	1	
R141	ERJ6GEYJ224	M.RESISTOR CH 1/10W 220K	1	
R142	ERJ6GEYJ563	M.RESISTOR CH 1/10W 56K	1	
R143	ERJ6GEYJ223	M.RESISTOR CH 1/10W 22K	1	
R144	ERJ6GEYJ103	M.RESISTOR CH 1/10W 10K	1	
R145	ERJ6GEYJ563	M.RESISTOR CH 1/10W 56K	1	
R146	ERJ6GEYJ562	M.RESISTOR CH 1/10W 5.6K	1	
R147,48	ERJ6GEYJ273	M.RESISTOR CH1/10W 27K	2	
R149	ERJ6GEYJ104	M.RESISTOR CH 1/10W 100K	1	
R150	ERJ6GEYJ183	M.RESISTOR CH 1/10W 18K	1	

Refer to the P.C.BOARDS LIST, page 6-1-1, before using this page.

Ref.No.		Part No.	Part Name & Description	Pcs	Remarks
R151		ERJ6GEYJ103	M.RESISTOR CH 1/10W 10K	1	
R152		ERJ6GEYJ824	M.RESISTOR CH 1/10W 820K	1	
R153		ERJ6GEYJ562	M.RESISTOR CH 1/10W 5.6K	1	
R154-56		ERJ6GEYJ393	M.RESISTOR CH 1/10W 39K	3	
R157		ERJ6GEYJ103	M.RESISTOR CH 1/10W 10K	1	
R158		ERJ6GEYJ183	M.RESISTOR CH 1/10W 18K	1	
R159		ERJ6GEYJ682	M.RESISTOR CH 1/10W 6.8K	1	
R160		ERJ6GEYJ183	M.RESISTOR CH 1/10W 18K	1	
R161		ERJ6GEYJ103	M.RESISTOR CH 1/10W 10K	1	
R162		ERJ6GEYJ563	M.RESISTOR CH 1/10W 56K	1	
R163		ERJ6GEYJ103	M.RESISTOR CH 1/10W 10K	1	
R164		ERJ6GEYJ562	M.RESISTOR CH 1/10W 5.6K	1	
R165		ERJ6GEYJ333	M.RESISTOR CH 1/10W 33K	1	
R166		ERJ6GEYJ222	M.RESISTOR CH 1/10W 2.2K	1	
R167		ERJ6GEYJ183	M.RESISTOR CH 1/10W 18K	1	
R168		ERJ6GEYJ273	M.RESISTOR CH1/10W 27K	1	
R169		ERJ6GEYJ103	M.RESISTOR CH 1/10W 10K	1	
R170,71		ERJ6GEYJ563	M.RESISTOR CH 1/10W 56K	2	
R172		ERJ6GEYJ102	M.RESISTOR CH 1/10W 1K	1	
R181,82		ERJ6GEYJ563	M.RESISTOR CH 1/10W 56K	2	
R183		ERJ6GEYJ102	M.RESISTOR CH 1/10W 1K	1	
R184		ERJ6GEYJ563	M.RESISTOR CH 1/10W 56K	1	
R185		ERJ6GEYJ104	M.RESISTOR CH 1/10W 100K	1	
R186		ERJ6GEYJ102	M.RESISTOR CH 1/10W 1K	1	
R187,88		ERJ6GEYJ822	M.RESISTOR CH 1/10W 8.2K	2	
R189		ERJ6GEYJ561	M.RESISTOR CH 1/10W 560	1	
R190		ERJ6GEYJ472	M.RESISTOR CH 1/10W 4.7K	1	
R191,92		ERJ6GEYJ563	M.RESISTOR CH 1/10W 56K	2	
R193,94		ERJ6GEYJ273	M.RESISTOR CH1/10W 27K	2	
R195		ERJ6GEYJ562	M.RESISTOR CH 1/10W 5.6K	1	
R196		ERJ6GEYJ153	M.RESISTOR CH 1/10W 15K	1	
R197		ERJ6GEYJ332	M.RESISTOR CH 1/10W 3.3K	1	
R198		ERJ6GEYJ561	M.RESISTOR CH 1/10W 560	1	
R199		ERJ6GEYJ273	M.RESISTOR CH1/10W 27K	1	
R200		ERJ6GEYJ223	M.RESISTOR CH 1/10W 22K	1	
R201		ERJ6GEYJ473	M.RESISTOR CH 1/10W 47K	1	
R202		ERJ6GEYJ562	M.RESISTOR CH 1/10W 5.6K	1	
R203		ERJ6GEYJ561	M.RESISTOR CH 1/10W 560	1	
R204		ERJ6GEYJ562	M.RESISTOR CH 1/10W 5.6K	1	
R205		ERJ6GEYJ101	M.RESISTOR CH 1/10W 100	1	
R206		ERJ6GEYJ104	M.RESISTOR CH 1/10W 100K	1	
R207-09		ERJ6GEYJ102	M.RESISTOR CH 1/10W 1K	3	
R210		ERJ6GEYJ153	M.RESISTOR CH 1/10W 15K	1	
R211		ERJ6GEYJ183	M.RESISTOR CH 1/10W 18K	1	
R212		ERJ6GEYJ683	M.RESISTOR CH 1/10W 68K	1	
R213-15		ERJ6GEYJ563	M.RESISTOR CH 1/10W 56K	3	
R216		ERJ6GEYJ105	M.RESISTOR CH 1/10W 1M	1	
R218		ERJ6GEYJ563	M.RESISTOR CH 1/10W 56K	1	
R219		ERJ6GEYJ103	M.RESISTOR CH 1/10W 10K	1	
R220		ERJ6GEYJ104	M.RESISTOR CH 1/10W 100K	1	
R222-27		ERJ6GEYJ563	M.RESISTOR CH 1/10W 56K	6	
R228		ERJ6GEYJ104	M.RESISTOR CH 1/10W 100K	1	
R229		ERJ6GEYJ223	M.RESISTOR CH 1/10W 22K	1	
R230		ERJ6GEYJ563	M.RESISTOR CH 1/10W 56K	1	
R231		ERJ6GEYJ104	M.RESISTOR CH 1/10W 100K	1	
R232		VREO034E272	M.RESISTOR CH 1/10W 2.7K	1	
R233		VREO034E104	M.RESISTOR CH 1/10W 100K	1	
R234		VREO034E272	M.RESISTOR CH 1/10W 2.7K	1	
R235		VREO034E104	M.RESISTOR CH 1/10W 100K	1	
R236		ERJ6GEYJ563	M.RESISTOR CH 1/10W 56K	1	
R237		ERJ6GEYJ824	M.RESISTOR CH 1/10W 820K	1	
R238		ERJ6GEYJ102	M.RESISTOR CH 1/10W 1K	1	
R239		ERJ6GEYJ103	M.RESISTOR CH 1/10W 10K	1	
R240		ERJ6GEYJ222	M.RESISTOR CH 1/10W 2.2K	1	
R241		ERJ6GEYJ104	M.RESISTOR CH 1/10W 100K	1	
R242		ERJ6GEYJ334	M.RESISTOR CH 1/10W 330K	1	
R243		ERJ6GEYJ101	M.RESISTOR CH 1/10W 100	1	
R244,45		ERJ6GEYJ103	M.RESISTOR CH 1/10W 10K	2	
R246		ERJ6GEYJ102	M.RESISTOR CH 1/10W 1K	1	
R247		ERJ6GEYJ103	M.RESISTOR CH 1/10W 10K	1	
R248		ERJ6GEYJ562	M.RESISTOR CH 1/10W 5.6K	1	
R249		ERJ6GEYJ392	M.RESISTOR CH 1/10W 3.9K	1	
R250		ERJ6GEYJ184	M.RESISTOR CH1/10W 180K	1	
R251		ERJ6GEYJ224	M.RESISTOR CH 1/10W 220K	1	
R252		ERJ6GEYJ153	M.RESISTOR CH 1/10W 15K	1	

Ref.No.		Part No.	Part Name & Description	Pcs	Remarks
R253		ERJ6GEYJ474	M.RESISTOR CH 1/10W 470K	1	
R254-58		ERJ6GEYJ103	M.RESISTOR CH 1/10W 10K	5	
R259		ERJ6GEYJ223	M.RESISTOR CH 1/10W 22K	1	
R260		ERJ6GEYJ393	M.RESISTOR CH 1/10W 39K	1	
R261		ERJ6GEYJ823	M.RESISTOR CH 1/10W 82K	1	
R262		ERJ6GEYJ123	M.RESISTOR CH1/10W 12K	1	
R263		ERJ6GEYJ183	M.RESISTOR CH 1/10W 18K	1	
R264		ERJ6GEYJ333	M.RESISTOR CH 1/10W 33K	1	
R265		ERJ6GEYJ683	M.RESISTOR CH 1/10W 68K	1	
R266-69		ERJ6GEYJ563	M.RESISTOR CH 1/10W 56K	4	
R270		ERJ6GEYJ562	M.RESISTOR CH 1/10W 5.6K	1	
R271		ERJ6GEYJ103	M.RESISTOR CH 1/10W 10K	1	
R273		ERJ6GEYJ393	M.RESISTOR CH 1/10W 39K	1	
R274		ERJ6GEYJ181	M.RESISTOR CH1/10W 180	1	
R275		ERJ6GEYJ563	M.RESISTOR CH 1/10W 56K	1	
R276,77		VREO034E102	M.RESISTOR CH 1/10W 1K	2	
R278		ERJ6GEYJ103	M.RESISTOR CH 1/10W 10K	1	
R279-81		ERJ6GEYJ563	M.RESISTOR CH 1/10W 56K	3	
R282		ERJ6GEYJ124	M.RESISTOR CH 1/10W 120K	1	
R283		ERJ6GEYJ103	M.RESISTOR CH 1/10W 10K	1	
R284		ERJ6GEYJ272	M.RESISTOR CH 1/10W 2.7K	1	
R285		ERJ6GEYJ122	M.RESISTOR CH1/10W 1.2K	1	
R286,87		ERJ6GEYJ472	M.RESISTOR CH 1/10W 4.7K	2	
R288		ERJ6GEYJ473	M.RESISTOR CH 1/10W 47K	1	
R289		ERJ6GEYJ823	M.RESISTOR CH 1/10W 82K	1	
R301		ERJ6GEYJ563	M.RESISTOR CH 1/10W 56K	1	
R302,03		ERJ6GEYJ103	M.RESISTOR CH 1/10W 10K	2	
R304		ERJ6GEYJ563	M.RESISTOR CH 1/10W 56K	1	
R305		ERJ6GEYJ104	M.RESISTOR CH 1/10W 100K	1	
R306		ERJ6GEYJ683	M.RESISTOR CH 1/10W 68K	1	
R307		ERJ6GEYJ223	M.RESISTOR CH 1/10W 22K	1	
R308		ERJ6GEYJ103	M.RESISTOR CH 1/10W 10K	1	
R309		ERJ6GEYJ472	M.RESISTOR CH 1/10W 4.7K	1	
R310		ERJ6GEYJ822	M.RESISTOR CH 1/10W 8.2K	1	
R311		ERJ6GEYJ392	M.RESISTOR CH 1/10W 3.9K	1	
R312		ERJ6GEYJ153	M.RESISTOR CH 1/10W 15K	1	
R313		ERJ6GEYJ332	M.RESISTOR CH 1/10W 3.3K	1	
R314		ERJ6GEYJ151	M.RESISTOR CH 1/10W 150	1	
R315,16		ERJ6GEYJ103	M.RESISTOR CH 1/10W 10K	2	
R317		ERJ6GEYJ683	M.RESISTOR CH 1/10W 68K	1	
R318		ERJ6GEYJ103	M.RESISTOR CH 1/10W 10K	1	
R319		ERJ6GEYJ273	M.RESISTOR CH1/10W 27K	1	
R320		ERJ6GEYJ104	M.RESISTOR CH 1/10W 100K	1	
R321		ERJ6GEYJ223	M.RESISTOR CH 1/10W 22K	1	
R322		ERJ6GEYJ563	M.RESISTOR CH 1/10W 56K	1	
R325,26		VREO034E332	M.RESISTOR CH 1/10W 3.3K	2	
R327		ERJ6GEYJ223	M.RESISTOR CH 1/10W 22K	1	
R328		ERJ6GEYJ104	M.RESISTOR CH 1/10W 100K	1	
R329		ERJ6GEYJ393	M.RESISTOR CH 1/10W 39K	1	
R330		ERJ6GEYJ334	M.RESISTOR CH 1/10W 330K	1	
R331		ERJ6GEYJ474	M.RESISTOR CH 1/10W 470K	1	
R332,33		ERJ6GEYJ104	M.RESISTOR CH 1/10W 100K	2	
R334		ERJ6GEYJ105	M.RESISTOR CH 1/10W 1M	1	
R335		ERJ6GEYJ684	M.RESISTOR CH 1/10W 680K	1	
R336		ERJ6GEYJ473	M.RESISTOR CH 1/10W 47K	1	
R337,38		ERJ6GEYJ103	M.RESISTOR CH 1/10W 10K	2	
R339,40		VREO034E332	M.RESISTOR CH 1/10W 3.3K	2	
R341		ERJ6GEYJ223	M.RESISTOR CH 1/10W 22K	1	
R342		ERJ6GEYJ104	M.RESISTOR CH 1/10W 100K	1	
R343		ERJ6GEYJ473	M.RESISTOR CH 1/10W 47K	1	
R344		ERJ6GEYJ334	M.RESISTOR CH 1/10W 330K	1	
R345		ERJ6GEYJ474	M.RESISTOR CH 1/10W 470K	1	
R346		ERJ6GEYJ104	M.RESISTOR CH 1/10W 100K	1	
R347		ERJ6GEYJ105	M.RESISTOR CH 1/10W 1M	1	
R348		ERJ6GEYJ684	M.RESISTOR CH 1/10W 680K	1	
R349,50		ERJ6GEYJ103	M.RESISTOR CH 1/10W 10K	2	
R351		ERJ6GEYJ472	M.RESISTOR CH 1/10W 4.7K	1	
R352-55		ERJ6GEYJ103	M.RESISTOR CH 1/10W 10K	4	
R356		ERJ6GEYJ222	M.RESISTOR CH 1/10W 2.2K	1	
R357		ERJ6GEYJ223	M.RESISTOR CH 1/10W 22K	1	
R358		ERJ6GEYJ104	M.RESISTOR CH 1/10W 100K	1	
R359,60		ERJ6GEYJ103	M.RESISTOR CH 1/10W 10K	2	
R362,63		ERJ6GEYJ103	M.RESISTOR CH 1/10W 10K	2	
R365		ERJ6GEYJ104	M.RESISTOR CH 1/10W 100K	1	
R366		ERJ6GEYJ103	M.RESISTOR CH 1/10W 10K	1	

Refer to the P.C.BOARDS LIST, page 6-1-1, before using this page.

Ref.No.	Part No.	Part Name & Description	Pcs	Remarks
R367,68	ERJ6GEYJ563	M.RESISTOR CH 1/10W 56K	2	
R369	ERJ6GEYJ104	M.RESISTOR CH 1/10W 100K	1	
R370,71	ERJ6GEYJ103	M.RESISTOR CH 1/10W 10K	2	
R373,74	ERJ6GEYJ103	M.RESISTOR CH 1/10W 10K	2	
R376	ERJ6GEYJ104	M.RESISTOR CH 1/10W 100K	1	
R378,79	ERJ6GEYJ563	M.RESISTOR CH 1/10W 56K	2	
R380	ERJ6GEYJ103	M.RESISTOR CH 1/10W 10K	1	
R381	ERJ6GEYJ473	M.RESISTOR CH 1/10W 47K	1	
R382	ERJ6GEYJ683	M.RESISTOR CH 1/10W 68K	1	
R383	ERJ6GEYJ152	M.RESISTOR CH 1/10W 1.5K	1	
R386	ERJ6GEYJ182	M.RESISTOR CH 1/10W 1.8K	1	
R388	ERJ6GEYJ273	M.RESISTOR CH1/10W 27K	1	
R389	ERJ6GEYJ153	M.RESISTOR CH 1/10W 15K	1	
R390	ERJ6GEYJ273	M.RESISTOR CH1/10W 27K	1	
R391	ERJ6GEYJ153	M.RESISTOR CH 1/10W 15K	1	
R392,93	ERJ6GEYJ103	M.RESISTOR CH 1/10W 10K	2	
R394,95	VRE0034E102	M.RESISTOR CH 1/10W 1K	2	
R396,97	VRE0034E472	M.RESISTOR CH 1/10W 4.7K	2	
R398	ERJ6GEYJ183	M.RESISTOR CH 1/10W 18K	1	
R424	ERJ6GEYJ222	M.RESISTOR CH 1/10W 2.2K	1	
R427	ERJ6GEYJ333	M.RESISTOR CH 1/10W 33K	1	
R428	ERJ6GEYJ223	M.RESISTOR CH 1/10W 22K	1	
R432,33	ERJ6GEYJ393	M.RESISTOR CH 1/10W 39K	2	
R434	ERJ6GEYJ331	M.RESISTOR CH 1/10W 330	1	
R435	ERJ6GEYJ103	M.RESISTOR CH 1/10W 10K	1	
R437	ERJ6GEYJ684	M.RESISTOR CH 1/10W 680K	1	
R440	ERJ6GEYJ562	M.RESISTOR CH 1/10W 5.6K	1	
R441,42	ERJ6GEYJ105	M.RESISTOR CH 1/10W 1M	2	
R443	ERJ6GEYJ223	M.RESISTOR CH 1/10W 22K	1	
R445	ERJ6GEY0R00	M.RESISTOR CH 1/10W 0	1	
R446,47	ERJ6GEYJ562	M.RESISTOR CH 1/10W 5.6K	2	
R448,49	ERJ6GEYJ105	M.RESISTOR CH 1/10W 1M	2	
R460,61	ERJ6GEYJ103	M.RESISTOR CH 1/10W 10K	2	
R462	ERJ6GEYJ223	M.RESISTOR CH 1/10W 22K	1	
R463	ERJ6GEYJ331	M.RESISTOR CH 1/10W 330	1	
R464	ERJ6GEY0R00	M.RESISTOR CH 1/10W 0	1	
R465	ERJ6GEYJ223	M.RESISTOR CH 1/10W 22K	1	
R466	ERJ6GEYJ103	M.RESISTOR CH 1/10W 10K	1	
R467	ERJ6GEYJ473	M.RESISTOR CH 1/10W 47K	1	
R469	ERJ6GEYJ564	M.RESISTOR CH 1/10W 560K	1	
R470	ERJ6GEYJ394	M.RESISTOR CH 1/10W 390K	1	
R501	ERJ6GEYJ102	M.RESISTOR CH 1/10W 1K	1	
R502	ERJ6GEYJ103	M.RESISTOR CH 1/10W 10K	1	
R503	ERJ6GEYJ102	M.RESISTOR CH 1/10W 1K	1	
R504-07	ERJ6GEYJ821	M.RESISTOR CH 1/10W 820	4	
R508	ERJ6GEYJ473	M.RESISTOR CH 1/10W 47K	1	
R509-12	ERJ6GEYJ391	M.RESISTOR CH 1/10W 390	4	
R513	ERJ6GEYJ103	M.RESISTOR CH 1/10W 10K	1	
R514	ERJ6GEYJ224	M.RESISTOR CH 1/10W 220K	1	
R515	ERJ6GEYJ273	M.RESISTOR CH1/10W 27K	1	
R516	ERJ6GEYJ103	M.RESISTOR CH 1/10W 10K	1	
R517	ERJ6GEYJ272	M.RESISTOR CH 1/10W 2.7K	1	
R518	ERJ6GEYJ104	M.RESISTOR CH 1/10W 100K	1	
R519	ERJ6GEYJ392	M.RESISTOR CH 1/10W 3.9K	1	
R520	ERJ6GEYJ333	M.RESISTOR CH 1/10W 33K	1	
R521,22	ERJ6GEYJ224	M.RESISTOR CH 1/10W 220K	2	
R523	ERX12SJR47	M.RESISTOR 1/2W 0.47	1	
R524	ERJ6GEYJ273	M.RESISTOR CH1/10W 27K	1	
R525	ERJ6GEYJ272	M.RESISTOR CH 1/10W 2.7K	1	
R526	ERJ6GEYJ103	M.RESISTOR CH 1/10W 10K	1	
R527	ERJ6GEYJ104	M.RESISTOR CH 1/10W 100K	1	
R528	ERJ6GEYJ224	M.RESISTOR CH 1/10W 220K	1	
R529	ERJ6GEYJ392	M.RESISTOR CH 1/10W 3.9K	1	
R530	ERJ6GEYJ223	M.RESISTOR CH 1/10W 22K	1	
R531	ERJ6GEYJ224	M.RESISTOR CH 1/10W 220K	1	
R532	ERX12SJR68	M.RESISTOR 1/2W 0.68	1	
R533	ERJ6GEYJ224	M.RESISTOR CH 1/10W 220K	1	
R534	ERJ6GEYJ273	M.RESISTOR CH1/10W 27K	1	
R535	ERJ6GEYJ103	M.RESISTOR CH 1/10W 10K	1	
R536	ERJ6GEYJ104	M.RESISTOR CH 1/10W 100K	1	
R537	ERX12SJR47	M.RESISTOR 1/2W 0.47	1	
R538-40	ERJ6GEYJ224	M.RESISTOR CH 1/10W 220K	3	
R541	ERJ6GEYJ272	M.RESISTOR CH 1/10W 2.7K	1	
R542	ERJ6GEYJ223	M.RESISTOR CH 1/10W 22K	1	
R543	ERJ6GEYJ273	M.RESISTOR CH1/10W 27K	1	

Ref.No.	Part No.	Part Name & Description	Pcs	Remarks
R544	ERJ6GEYJ104	M.RESISTOR CH 1/10W 100K	1	
R545	ERJ6GEYJ103	M.RESISTOR CH 1/10W 10K	1	
R546	ERX12SJR47	M.RESISTOR 1/2W 0.47	1	
R547-49	ERJ6GEYJ224	M.RESISTOR CH 1/10W 220K	3	
R550	ERJ6GEYJ272	M.RESISTOR CH 1/10W 2.7K	1	
R551	ERJ6GEYJ223	M.RESISTOR CH 1/10W 22K	1	
R553	ERJ6GEY0R00	M.RESISTOR CH 1/10W 0	1	
R554	ERJ6GEYJ272	M.RESISTOR CH 1/10W 2.7K	1	
R555-57	ERJ6GEY0R00	M.RESISTOR CH 1/10W 0	3	
SW1,W2	VSR0032	VOLTAGE SELECT SWITCH	2	
SW3	VSS0126	SWITCH	1	
TP3-P7	VJR0582	PACK PIN	5	
TP13	VJR0582	PACK PIN	1	
TP15-17	VJR0582	PACK PIN	3	
TP19,20	VJR0582	PACK PIN	2	
TP102-05	VJR0582	PACK PIN	4	
TP108-18	VJR0582	PACK PIN	11	
TP201,02	VJR0582	PACK PIN	2	
TP302-04	VJR0582	PACK PIN	3	
TP306	VJR0582	PACK PIN	1	
TP309-12	VJR0582	PACK PIN	4	
TPG1,G2	VJR0582	PACK PIN	2	
VC101	ECV1ZW30X53	V.CAPACITOR 30P	1	
VR1	VRV0109B503	V.RESISTOR 50K	1	
VR3	VRV0109B203	V.RESISTOR 20K	1	
VR101	VRV0109B203	V.RESISTOR 20K	1	
VR102	VRV0109B103	V.RESISTOR 10K	1	
VR103	VRV0109B203	V.RESISTOR 20K	1	
VR104	VRV0109B502	V.RESISTOR 5K	1	
VR105	VRV0109B104	V.RESISTOR 100K	1	
VR301	VRV0109B502	V.RESISTOR 5K	1	
VR302,03	VRV0109B202	V.RESISTOR 2K	2	
VR304-07	VRV0109B503	V.RESISTOR 50K	4	
VR308	VRV0109B202	V.RESISTOR 2K	1	
VR309	VRV0109B503	V.RESISTOR 50K	1	
X101	VSX0081	CRYSTAL OSCILLATOR	1	
X501	VSX0136	CRYSTAL OSCILLATOR	1	
		MISCELLANEOUS		
	VML2143	CARD PULLER	1	
	VML2144	CARD PULLER	1	
	VMS4174	PIN	6	
	VMZ1091	BARRIER	1	
	VMZ1547	BARRIER	1	
	VSC2286	SHIELD CASE	1	
	VSC3056	SHIELD CASE	1	
	VXA3966	P.C.B. SHIELD PLATE	1	
	XNG26E	NUT	4	
	XYNV3+K6FR	SCREW	6	
	XYN26+C12	SCREW	4	

Refer to the P.C.BOARDS LIST, page 6-1-1, before using this page.

Ref.No.		Part No.	Part Name & Description	Pcs	Remarks
	■	VEP82061C	P.C.BOARD W/COMPONENT		FOR AU-62-P
			W5 SERVO		
			CAPACITORS		
C1		ECQM1H273JF	P.CAPACITOR 50V 0.027U	1	
C1,C2		ECUM1H103ZFN	C.CAPACITOR CH 50V 0.01U	2	
C2		ECUM1H152JN	C.CAPACITOR CH 50V 1500P	1	
C3,C4		ECUM1H101JCN	C.CAPACITOR CH 50V 100P	2	
C5		ECEA1CU100	E.CAPACITOR 16V 10U	1	
C6		ECEA0JU101	E.CAPACITOR 6.3V 100U	1	
C7		ECEA1AU470	E.CAPACITOR 10V 47U	1	
C8		ECUM1H103ZFN	C.CAPACITOR CH 50V 0.01U	1	
C9		ECQM1H154JF	P.CAPACITOR 50V 0.15U	1	
C10		ECEA1HN2R2S	E.CAPACITOR 50V 2.2U	1	
C11		ECQM1H223JF	P.CAPACITOR 50V 0.022U	1	
C13		ECQP1H822JZ	P.CAPACITOR 50V 8200P	1	
C14		ECQM1H682JV	P.CAPACITOR 50V 6800P	1	
C15,16		ECUM1H103ZFN	C.CAPACITOR CH 50V 0.01U	2	
C17		ECQM1H394JV	P.CAPACITOR 50V 0.39U	1	
C18		ECEA1HU4R7	E.CAPACITOR 50V 4.7U	1	
C19		ECEA1AU470	E.CAPACITOR 10V 47U	1	
C20,21		ECUM1H103ZFN	C.CAPACITOR CH 50V 0.01U	2	
C22		ECEA1HU2R2	E.CAPACITOR 50V 2.2U	1	
C23,24		ECUM1E104ZFN	C.CAPACITOR CH 25V 0.1U	2	
C25		ECUM1H103ZFN	C.CAPACITOR CH 50V 0.01U	1	
C26		ECEA1AU470	E.CAPACITOR 10V 47U	1	
C27		ECUM1H103ZFN	C.CAPACITOR CH 50V 0.01U	1	
C28		ECEA1AU470	E.CAPACITOR 10V 47U	1	
C29		ECEA1AU330	E.CAPACITOR 10V 33U	1	
C30		ECUM1H103ZFN	C.CAPACITOR CH 50V 0.01U	1	
C31		ECEA1AU330	E.CAPACITOR 10V 33U	1	
C32		ECEA1AU470	E.CAPACITOR 10V 47U	1	
C33		ECUM1H103ZFN	C.CAPACITOR CH 50V 0.01U	1	
C34		ECEA1AU470	E.CAPACITOR 10V 47U	1	
C39		ECUM1H331JCN	C.CAPACITOR CH 50V 330P	1	
C40-42		ECUM1H103ZFN	C.CAPACITOR CH 50V 0.01U	3	
C43		ECUM1H101JCN	C.CAPACITOR CH 50V 100P	1	
C46		ECEA1CU470	E.CAPACITOR 16V 47U	1	
C47,48		ECUM1E104ZFN	C.CAPACITOR CH 25V 0.1U	2	
C101		ECQM1H104JF	P.CAPACITOR 50V 0.1U	1	
C102		ECUM1H151JCN	C.CAPACITOR CH 50V 150P	1	
C103		ECEA1CU470	E.CAPACITOR 16V 47U	1	
C104		ECEA1HU2R2	E.CAPACITOR 50V 2.2U	1	
C105		ECEA1CU101	E.CAPACITOR 16V 100U	1	
C106		ECQM1H104JF	P.CAPACITOR 50V 0.1U	1	
C107		ECUM1H151JCN	C.CAPACITOR CH 50V 150P	1	
C108		ECUM1H102JCN	C.CAPACITOR CH 50V 1000P	1	
C109		ECUM1H221JCN	C.CAPACITOR CH 50V 220P	1	
C110		ECQM1H103JF	P.CAPACITOR 50V 0.01U	1	
C111		ECEA1HU010	E.CAPACITOR 50V 1U	1	
C112		ECQM1H154JF	P.CAPACITOR 50V 0.15U	1	
C113		ECEA1HU010	E.CAPACITOR 50V 1U	1	
C114		ECEA1CU470	E.CAPACITOR 16V 47U	1	
C115		ECUM1H103ZFN	C.CAPACITOR CH 50V 0.01U	1	
C116		ECEA1CU470	E.CAPACITOR 16V 47U	1	
C117		ECUM1H103ZFN	C.CAPACITOR CH 50V 0.01U	1	
C118		ECEA1CU470	E.CAPACITOR 16V 47U	1	
C119		ECUM1H103ZFN	C.CAPACITOR CH 50V 0.01U	1	
C120		ECEA1CU470	E.CAPACITOR 16V 47U	1	
C121		ECUM1H103ZFN	C.CAPACITOR CH 50V 0.01U	1	
C122		ECEA1CU470	E.CAPACITOR 16V 47U	1	
C123		ECUM1H330JCN	C.CAPACITOR CH 50V 33P	1	
C124		ECUM1H103ZFN	C.CAPACITOR CH 50V 0.01U	1	
C125		ECEA1CU470	E.CAPACITOR 16V 47U	1	
C126		ECQM1H562JF	P.CAPACITOR 50V 5600P	1	
C127		ECQM1H393JF	P.CAPACITOR 50V 0.039U	1	
C128		ECQM1H104JF	P.CAPACITOR 50V 0.1U	1	
C129		ECEA1OM22	E.CAPACITOR 10V 22U	1	

Ref.No.		Part No.	Part Name & Description	Pcs	Remarks
C130		ECEA1HU010	E.CAPACITOR 50V 1U	1	
C131		ECEA1EN220S	E.CAPACITOR 25V 22U	1	
C132		ECQM1H103JF	P.CAPACITOR 50V 0.01U	1	
C133-36		ECUM1H103ZFN	C.CAPACITOR CH 50V 0.01U	4	
C137		ECEA1CU101	E.CAPACITOR 16V 100U	1	
C139		ECQM1H822JF	P.CAPACITOR 50V 8200P	1	
C140		ECUM1H102JCN	C.CAPACITOR CH 50V 1000P	1	
C141		ECEA1HN010S	E.CAPACITOR 50V 1U	1	
C143		ECEA1CU470	E.CAPACITOR 16V 47U	1	
C145		ECEA1AU470	E.CAPACITOR 10V 47U	1	
C146		ECUM1H103ZFN	C.CAPACITOR CH 50V 0.01U	1	
C147		ECEA1HUR47	E.CAPACITOR 50V 0.47U	1	
C148		ECEA1CU470	E.CAPACITOR 16V 47U	1	
C149,50		ECUM1H103ZFN	C.CAPACITOR CH 50V 0.01U	2	
C151		ECEA1HN010S	E.CAPACITOR 50V 1U	1	
C152,53		ECUM1H103ZFN	C.CAPACITOR CH 50V 0.01U	2	
C154		ECUM1H152KBN	C.CAPACITOR CH 50V 1500P	1	
C155		ECEA1HN100S	E.CAPACITOR 50V 10U	1	
C156		ECEA1HUR47	E.CAPACITOR 50V 0.47U	1	
C157,58		ECUM1H103ZFN	C.CAPACITOR CH 50V 0.01U	2	
C159		ECQM1H104JF	P.CAPACITOR 50V 0.1U	1	
C160		ECUM1H103ZFN	C.CAPACITOR CH 50V 0.01U	1	
C161		ECQM1H104JF	P.CAPACITOR 50V 0.1U	1	
C162,63		ECQM1H103JF	P.CAPACITOR 50V 0.01U	2	
C164		ECEA1HU4R7	E.CAPACITOR 50V 4.7U	1	
C165-67		ECUM1H103ZFN	C.CAPACITOR CH 50V 0.01U	3	
C168		ECEA1EU100	E.CAPACITOR 25V 10U	1	
C169		ECUM1H103KBN	C.CAPACITOR CH 50V 0.01U	1	
C170		ECUM1H471JCN	C.CAPACITOR CH 50V 470P	1	
C171,72		ECUM1H103ZFN	C.CAPACITOR CH 50V 0.01U	2	
C173		ECUM1H101JCN	C.CAPACITOR CH 50V 100P	1	
C174		ECUM1H103ZFN	C.CAPACITOR CH 50V 0.01U	1	
C175		ECQM1H184JF	P.CAPACITOR 50V 0.18U	1	
C176		ECEA1CU470	E.CAPACITOR 16V 47U	1	
C177		ECQM1H222JF	P.CAPACITOR 50V 2200P	1	
C301		ECEA1AU330	E.CAPACITOR 10V 33U	1	
C302		ECUM1H103ZFN	C.CAPACITOR CH 50V 0.01U	1	
C303		ECQM1H562JF	P.CAPACITOR 50V 5600P	1	
C304		ECQM1H392JF	P.CAPACITOR 50V 3900P	1	
C305		ECUM1H103ZFN	C.CAPACITOR CH 50V 0.01U	1	
C306		ECQM1H123JF	P.CAPACITOR 50V 0.012U	1	
C307		ECEA1CN470S	E.CAPACITOR 16V 47U	1	
C308		ECEA0JU221	E.CAPACITOR 6.3V 220U	1	
C309		ECEA1HU2R2	E.CAPACITOR 50V 2.2U	1	
C310		ECQM1H104JF	P.CAPACITOR 50V 0.1U	1	
C311		ECUM1H153KBN	C.CAPACITOR CH 50V 0.015U	1	
C312		ECEA1HN010S	E.CAPACITOR 50V 1U	1	
C313,14		ECUM1H103ZFN	C.CAPACITOR CH 50V 0.01U	2	
C315		ECQM1H104JF	P.CAPACITOR 50V 0.1U	1	
C316		ECUM1E273KBN	C.CAPACITOR CH 25V 0.027U	1	
C317		ECEA1HN2R2S	E.CAPACITOR 50V 2.2U	1	
C318-20		ECUM1H103ZFN	C.CAPACITOR CH 50V 0.01U	3	
C321		ECEA1CU100	E.CAPACITOR 16V 10U	1	
C322		ECEA0JU470	E.CAPACITOR 6.3V 47U	1	
C323		ECUM1H103ZFN	C.CAPACITOR CH 50V 0.01U	1	
C324		ECEA0JU102	E.CAPACITOR 6.3V 1000U	1	
C325		ECUM1H103ZFN	C.CAPACITOR CH 50V 0.01U	1	
C327		ECEA1HU2R2	E.CAPACITOR 50V 2.2U	1	
C328,29		ECEA1CU100	E.CAPACITOR 16V 10U	2	
C330-36		ECUM1H103ZFN	C.CAPACITOR CH 50V 0.01U	7	
C337		ECEA1HU2R2	E.CAPACITOR 50V 2.2U	1	
C338,39		ECEA1CU100	E.CAPACITOR 16V 10U	2	
C401-03		ECUM1H103ZFN	C.CAPACITOR CH 50V 0.01U	3	
C406		ECUM1H103ZFN	C.CAPACITOR CH 50V 0.01U	1	
C408-10		ECUM1H103ZFN	C.CAPACITOR CH 50V 0.01U	3	
C454		ECUM1H103ZFN	C.CAPACITOR CH 50V 0.01U	1	
C492		ECUM1H103ZFN	C.CAPACITOR CH 50V 0.01U	1	
C495,96		ECUM1H103ZFN	C.CAPACITOR CH 50V 0.01U	2	
C501		ECUM1H103ZFN	C.CAPACITOR CH 50V 0.01U	1	
C502		ECEA1CU470	E.CAPACITOR 16V 47U	1	
C503		ECEA1ESS471	E.CAPACITOR 25V 470U	1	
C504		ECUM1E473KBN	C.CAPACITOR CH 25V 0.047U	1	
C505		ECUM1H561JCN	C.CAPACITOR CH 50V 560P	1	
C506		ECUM1H820JCN	C.CAPACITOR CH 50V 82P	1	
C507		ECUM1H561JCN	C.CAPACITOR CH 50V 560P	1	

Refer to the P.C.BOARDS LIST, page 6-1-1, before using this page.

Ref.No.		Part No.	Part Name & Description	Pcs	Remarks
C508		ECEA1HU010	E.CAPACITOR 50V 1U	1	
C509-13		ECEA1ESS101	E.CAPACITOR 25V 100U	5	
C514		ECQM1H104JF	P.CAPACITOR 50V 0.1U	1	
C515		ECEA1EU4R7	E.CAPACITOR 25V 4.7U	1	
C516-18		ECEA1HN4R7S	E.CAPACITOR 50V 4.7U	3	
C519		ECEA1HU010	E.CAPACITOR 50V 1U	1	
C520-22		ECUM1H103KBN	C.CAPACITOR CH 50V 0.01U	3	
C523		ECQM1H104JF	P.CAPACITOR 50V 0.1U	1	
C524		ECEA1EU4R7	E.CAPACITOR 25V 4.7U	1	
C525,26		ECEA1HN4R7S	E.CAPACITOR 50V 4.7U	2	
C527		ECQM1H104JF	P.CAPACITOR 50V 0.1U	1	
C528		ECEA1HU010	E.CAPACITOR 50V 1U	1	
C529-31		ECUM1H103KBN	C.CAPACITOR CH 50V 0.01U	3	
C532		ECEA1EU4R7	E.CAPACITOR 25V 4.7U	1	
C533,34		ECEA1HN4R7S	E.CAPACITOR 50V 4.7U	2	
C535		ECQM1H104JF	P.CAPACITOR 50V 0.1U	1	
C536		ECEA1HU010	E.CAPACITOR 50V 1U	1	
C537-39		ECUM1H103KBN	C.CAPACITOR CH 50V 0.01U	3	
C540		ECEA1EU4R7	E.CAPACITOR 25V 4.7U	1	
C541-43		ECEA1HN4R7S	E.CAPACITOR 50V 4.7U	3	
C544		ECQM1H104JF	P.CAPACITOR 50V 0.1U	1	
C545		ECEA1HU010	E.CAPACITOR 50V 1U	1	
C546-48		ECUM1H103KBN	C.CAPACITOR CH 50V 0.01U	3	
C549		ECEA1AU470	E.CAPACITOR 10V 47U	1	
C550		ECUM1E473KBN	C.CAPACITOR CH 25V 0.047U	1	
C551		ECEA1HN4R7S	E.CAPACITOR 50V 4.7U	1	
C552		ECQM1H104JF	P.CAPACITOR 50V 0.1U	1	
C553		ECEA1HN4R7S	E.CAPACITOR 50V 4.7U	1	
C554		ECUM1H103ZFN	C.CAPACITOR CH 50V 0.01U	1	
C555		ECEA1VU101	E.CAPACITOR 35V 100U	1	
C558-63		ECQM1H104JF	P.CAPACITOR 50V 0.1U	6	
C900-11		ECUM1H103ZFN	C.CAPACITOR CH 50V 0.01U	12	
D1		MA151K	DIODE	1	
D1		MA151K	DIODE	1	
D2,D3		MA151WA	DIODE	2	
D4		MA151K	DIODE	1	
D4-D6		MA151K	DIODE	3	
D101		MA151K	DIODE	1	
D102		MA153	DIODE	1	
D103		MA151WK	DIODE	1	
D104		MA151K	DIODE	1	
D105		MA151WK	DIODE	1	
D106,07		MA151WA	DIODE	2	
D108		MA151K	DIODE	1	
D109		MA151WK	DIODE	1	
D112		MA151WK	DIODE	1	
D113,14		MA151K	DIODE	2	
D115		MA153	DIODE	1	
D116		MA151K	DIODE	1	
D119		MA151WK	DIODE	1	
D120-22		MA151WA	DIODE	3	
D123		MA151K	DIODE	1	
D124		MA151WA	DIODE	1	
D125		MA151K	DIODE	1	
D126,27		MA153	DIODE	2	
D301,02		MA151K	DIODE	2	
D303		MA151WK	DIODE	1	
D304		MA151WA	DIODE	1	
D305		MA151K	DIODE	1	
D307		MA151WA	DIODE	1	
D309		MA151WK	DIODE	1	
D310		MA151K	DIODE	1	
D313		MA151WA	DIODE	1	
D314-17		MA151WK	DIODE	4	
D318		MA151K	DIODE	1	
D319,20		MA151WK	DIODE	2	
D321,22		MA151K	DIODE	2	
D323,24		MA151WK	DIODE	2	
D325		MA151K	DIODE	1	
D328-30		MA151K	DIODE	3	
D332		MA151K	DIODE	1	
D333		MA151WK	DIODE	1	

Ref.No.		Part No.	Part Name & Description	Pcs	Remarks
D334-37		MA151K	DIODE	4	
D338		MA151WK	DIODE	1	
D340		MA151WA	DIODE	1	
D341		MA151K	DIODE	1	
D349-51		MA165	DIODE	3	
D501		MA151K	DIODE	1	
D502		MA151WK	DIODE	1	
D503		MA153	DIODE	1	
D504		MA151WK	DIODE	1	
D505,06		MA151K	DIODE	2	
D507		MA151WK	DIODE	1	
D508,09		MA151K	DIODE	2	
D510		MA151WK	DIODE	1	
D511		MA151K	DIODE	1	
D514-17		MA701A	DIODE	4	
D572		MA151K	DIODE	1	
IC1		LM2904M	IC	1	
IC1		MC74HC02AF	IC	1	
IC2		LM2903M	IC	1	
IC2		MC74HC02AF	IC	1	
IC3		LM2904M	IC	1	
IC4		NJM4558M	IC	1	
IC5		MC14538BF	IC	1	
IC6		UPD65031F405	IC	1	
IC7		MN53015VZW	IC	1	
IC8		MC14049UBF	IC	1	
IC9		MC14013BF	IC	1	
IC10		MM74HC221AM	IC	1	
IC11		AN78L05	IC	1	
IC12		MC14021BF	IC	1	
IC13		MC14094BF	IC	1	
IC14		UPD4053BG	IC	1	
IC15		MC14049UBF	IC	1	
IC16		MC14050BF	IC	1	
IC18		MN51020VZZ	IC	1	
IC101		LM2904M	IC	1	
IC102		LM2903M	IC	1	
IC103		LM2904M	IC	1	
IC104		MC14538BF	IC	1	
IC105		AN79L09	IC	1	
IC106		AN78N09	IC	1	
IC107		DN74LS293S	IC	1	
IC108		MC74HC00AF	IC	1	
IC109		MN6064R	IC	1	
IC110		MN6168VIA	IC	1	
IC111		MC74HCU04F	IC	1	
IC112		MC14049UBF	IC	1	
IC113,14		LM2904M	IC	2	
IC115		LM2903M	IC	1	
IC116,17		LM2904M	IC	2	
IC118-20		MC14066BF	IC	3	
IC121		UPD4052BG	IC	1	
IC123		UPD4053BG	IC	1	
IC124		MN53030VYA	IC	1	
IC125		MN53007VYC	IC	1	
IC126		UPC4558G	IC	1	
IC128		NJM4558M	IC	1	
IC129		MC14538BF	IC	1	
IC130		MC14013BF	IC	1	
IC131		LM2904M	IC	1	
IC132		UPC4558G	IC	1	
IC133		MN4030BS	IC	1	
IC134		MC14538BF	IC	1	
IC135		UPD4053BG	IC	1	
IC137		MC14538BF	IC	1	
IC301		AN78L05	IC	1	
IC302		LM2904M	IC	1	
IC303		LM2902M	IC	1	
IC304		UPD4053BG	IC	1	
IC305		MC14066BF	IC	1	
IC306		LM2904M	IC	1	
IC307		LM2902M	IC	1	

Refer to the P.C.BOARDS LIST, page 6-1-1, before using this page.

Ref.No.		Part No.	Part Name & Description	Pcs	Remarks
IC308,09		LM2904M	IC	2	
IC310-13		MC14066BF	IC	4	
IC314		MC14028BF	IC	1	
IC315		MC14081BF	IC	1	
IC316		NJM2901M	IC	1	
IC317,18		MC14538BF	IC	2	
IC319		MC14049UBF	IC	1	
IC501		BA6149LS	IC	1	
IC502		PU4213	IC	1	
IC503-06		AN3821K	IC	4	
IC800		LM2904M	IC	1	
L1		VLP0017	COIL	1	
L2-L4		VLQEL05S221J	COIL 220UH	3	
L101,02		VLQEL05S221J	COIL 220UH	2	
L501		VLQ0214	COIL 50UH	1	
L504-07		VLQ0129	COIL 300UH	4	
Q1		UN2213	TRANSISTOR-RESISTOR	1	
Q1,Q2		UN2213	TRANSISTOR-RESISTOR	2	
Q2		UN2213	TRANSISTOR-RESISTOR	1	
Q8,Q9		UN2213	TRANSISTOR-RESISTOR	2	
Q15,16		UN2213	TRANSISTOR-RESISTOR	2	
Q101		2SD601	TRANSISTOR CHIP	1	(Q,R)
Q102		UN2213	TRANSISTOR-RESISTOR	1	
Q103		2SJ43	TRANSISTOR	1	
Q104		UN2213	TRANSISTOR-RESISTOR	1	
Q105		2SD601	TRANSISTOR CHIP	1	(Q,R)
Q106-08		UN2213	TRANSISTOR-RESISTOR	3	
Q109		2SD601	TRANSISTOR CHIP	1	(Q,R)
Q110-19		UN2213	TRANSISTOR-RESISTOR	10	
Q120		2SD601	TRANSISTOR CHIP	1	(Q,R)
Q123,24		UN2213	TRANSISTOR-RESISTOR	2	
Q128		UN2213	TRANSISTOR-RESISTOR	1	
Q129		UN2214	TRANSISTOR-RESISTOR	1	
Q130		2SK374	TRANSISTOR	1	
Q131-33		UN2213	TRANSISTOR-RESISTOR	3	
Q134,35		2SB709	TRANSISTOR CHIP	2	(Q,R)
Q137-39		UN2213	TRANSISTOR-RESISTOR	3	
Q140		MA151A	DIODE	1	
Q301,02		UN2213	TRANSISTOR-RESISTOR	2	
Q303		UN2113	TRANSISTOR-RESISTOR	1	
Q304		UN2213	TRANSISTOR-RESISTOR	1	
Q305		UN2113	TRANSISTOR-RESISTOR	1	
Q306-09		UN2213	TRANSISTOR-RESISTOR	4	
Q312-14		UN2213	TRANSISTOR-RESISTOR	3	
Q316		2SD601	TRANSISTOR CHIP	1	(Q,R)
Q317		UN2213	TRANSISTOR-RESISTOR	1	
Q319		2SD601	TRANSISTOR CHIP	1	(Q,R)
Q320		UN2213	TRANSISTOR-RESISTOR	1	
Q326		UN2213	TRANSISTOR-RESISTOR	1	
Q330-33		UN2213	TRANSISTOR-RESISTOR	4	
Q336,37		UN2213	TRANSISTOR-RESISTOR	2	
Q339,40		UN2213	TRANSISTOR-RESISTOR	2	
Q343		UN2213	TRANSISTOR-RESISTOR	1	
Q501-04		2SB709	TRANSISTOR CHIP	4	(Q,R)
Q505		UN2113	TRANSISTOR-RESISTOR	1	
Q506		UN2213	TRANSISTOR-RESISTOR	1	
Q507		UN2113	TRANSISTOR-RESISTOR	1	
Q508,09		UN2213	TRANSISTOR-RESISTOR	2	
			RESISTORS		
R1		ERJ6GEYJ103	M.RESISTOR CH 1/10W 10K	1	
R1		ERJ6GEYJ472	M.RESISTOR CH 1/10W 4.7K	1	
R2		ERJ6GEYJ562	M.RESISTOR CH 1/10W 5.6K	1	
R2		ERJ6GEYJ683	M.RESISTOR CH 1/10W 68K	1	
R3		ERJ6GEYJ103	M.RESISTOR CH 1/10W 10K	1	
R3		ERJ6GEYJ562	M.RESISTOR CH 1/10W 5.6K	1	
R4		ERJ6GEYJ105	M.RESISTOR CH 1/10W 1M	1	

Ref.No.		Part No.	Part Name & Description	Pcs	Remarks
R4		ERJ6GEYJ105	M.RESISTOR CH 1/10W 1M	1	
R5		ERJ6GEYJ103	M.RESISTOR CH 1/10W 10K	1	
R5		ERJ6GEYJ105	M.RESISTOR CH 1/10W 1M	1	
R6		ERJ6GEYJ103	M.RESISTOR CH 1/10W 10K	1	
R6		ERJ6GEYJ562	M.RESISTOR CH 1/10W 5.6K	1	
R7		ERJ6GEYJ155	M.RESISTOR CH 1/10W 1.5M	1	
R7		ERJ6GEYJ562	M.RESISTOR CH 1/10W 5.6K	1	
R8		ERJ6GEYJ103	M.RESISTOR CH 1/10W 10K	1	
R9		ERJ6GEYJ125	M.RESISTOR CH 1/10W 1.2M	1	
R10		ERJ6GEYJ563	M.RESISTOR CH 1/10W 56K	1	
R10		ERJ6GEYJ823	M.RESISTOR CH 1/10W 82K	1	
R11,12		VRE0034E102	M.RESISTOR CH 1/10W 1K	2	
R13		ERJ6GEYJ123	M.RESISTOR CH 1/10W 12K	1	
R14		ERJ6GEYJ823	M.RESISTOR CH 1/10W 82K	1	
R15		ERJ6GEYJ393	M.RESISTOR CH 1/10W 39K	1	
R16		ERJ6GEYJ564	M.RESISTOR CH 1/10W 560K	1	
R17		ERJ6GEYJ822	M.RESISTOR CH 1/10W 8.2K	1	
R18,19		ERJ6GEYJ183	M.RESISTOR CH 1/10W 18K	2	
R20		ERJ6GEYJ822	M.RESISTOR CH 1/10W 8.2K	1	
R21		ERJ6GEYJ104	M.RESISTOR CH 1/10W 100K	1	
R22		ERJ6GEYJ472	M.RESISTOR CH 1/10W 4.7K	1	
R23		ERJ6GEYJ103	M.RESISTOR CH 1/10W 10K	1	
R24		ERJ6GEYJ563	M.RESISTOR CH 1/10W 56K	1	
R25		ERJ6GEYJ102	M.RESISTOR CH 1/10W 1K	1	
R27		ERJ6GEYJ103	M.RESISTOR CH 1/10W 10K	1	
R28-31		ERJ6GEYJ563	M.RESISTOR CH 1/10W 56K	4	
R34,35		ERJ6GEYJ103	M.RESISTOR CH 1/10W 10K	2	
R36		ERJ6GEYJ562	M.RESISTOR CH 1/10W 5.6K	1	
R37-44		ERJ6GEYJ563	M.RESISTOR CH 1/10W 56K	8	
R45		ERJ6GEYJ104	M.RESISTOR CH 1/10W 100K	1	
R50		ERJ6GEYJ563	M.RESISTOR CH 1/10W 56K	1	
R51		ERJ6GEYJ103	M.RESISTOR CH 1/10W 10K	1	
R52		ERJ6GEYJ474	M.RESISTOR CH 1/10W 470K	1	
R53		ERJ6GEYJ563	M.RESISTOR CH 1/10W 56K	1	
R54		ERJ6GEYJ103	M.RESISTOR CH 1/10W 10K	1	
R55		ERJ6GEYJ474	M.RESISTOR CH 1/10W 470K	1	
R56		ERJ6GEYJ563	M.RESISTOR CH 1/10W 56K	1	
R57		ERJ6GEYJ103	M.RESISTOR CH 1/10W 10K	1	
R58		ERJ6GEYJ474	M.RESISTOR CH 1/10W 470K	1	
R59		ERJ6GEYJ103	M.RESISTOR CH 1/10W 10K	1	
R60		ERJ6GEYJ102	M.RESISTOR CH 1/10W 1K	1	
R61		ERJ6GEYJ223	M.RESISTOR CH 1/10W 22K	1	
R62		ERJ6GEYJ103	M.RESISTOR CH 1/10W 10K	1	
R69,70		ERJ6GEYJ102	M.RESISTOR CH 1/10W 1K	2	
R101		ERJ6GEYJ103	M.RESISTOR CH 1/10W 10K	1	
R102		ERJ6GEYJ184	M.RESISTOR CH 1/10W 180K	1	
R103		ERJ6GEYJ102	M.RESISTOR CH 1/10W 1K	1	
R104		ERJ6GEYJ474	M.RESISTOR CH 1/10W 470K	1	
R105-07		ERJ6GEYJ103	M.RESISTOR CH 1/10W 10K	3	
R108		ERJ6GEYJ184	M.RESISTOR CH 1/10W 180K	1	
R109		ERJ6GEYJ102	M.RESISTOR CH 1/10W 1K	1	
R110		ERJ6GEYJ474	M.RESISTOR CH 1/10W 470K	1	
R111		ERJ6GEYJ103	M.RESISTOR CH 1/10W 10K	1	
R112		ERJ6GEYJ153	M.RESISTOR CH 1/10W 15K	1	
R113		ERJ6GEYJ562	M.RESISTOR CH 1/10W 5.6K	1	
R114		ERJ6GEYJ224	M.RESISTOR CH 1/10W 220K	1	
R115		ERJ6GEYJ682	M.RESISTOR CH 1/10W 6.8K	1	
R116		ERJ6GEYJ153	M.RESISTOR CH 1/10W 15K	1	
R117		ERJ6GEYJ104	M.RESISTOR CH 1/10W 100K	1	
R118		ERJ6GEYJ103	M.RESISTOR CH 1/10W 10K	1	
R119		ERJ6GEYJ153	M.RESISTOR CH 1/10W 15K	1	
R120		ERJ6GEYJ152	M.RESISTOR CH 1/10W 1.5K	1	
R121,22		ERJ6GEYJ103	M.RESISTOR CH 1/10W 10K	2	
R123		ERJ6GEYJ105	M.RESISTOR CH 1/10W 1M	1	
R124		ERJ6GEYJ272	M.RESISTOR CH 1/10W 2.7K	1	
R125		ERJ6GEYJ103	M.RESISTOR CH 1/10W 10K	1	
R126-32		ERJ6GEYJ563	M.RESISTOR CH 1/10W 56K	7	
R133,34		ERJ6GEYJ103	M.RESISTOR CH 1/10W 10K	2	
R135,36		ERJ6GEYJ563	M.RESISTOR CH 1/10W 56K	2	
R137		ERJ6GEYJ103	M.RESISTOR CH 1/10W 10K	1	
R138		ERJ6GEYJ563	M.RESISTOR CH 1/10W 56K	1	
R139		ERJ6GEYJ224	M.RESISTOR CH 1/10W 220K	1	
R140		ERJ6GEYJ563	M.RESISTOR CH 1/10W 56K	1	
R141		ERJ6GEYJ224	M.RESISTOR CH 1/10W 220K	1	
R142		ERJ6GEYJ563	M.RESISTOR CH 1/10W 56K	1	

Refer to the P.C.BOARDS LIST, page 6-1-1, before using this page.

Ref.No.		Part No.	Part Name & Description	Pcs	Remarks
R143		ERJ6GEYJ223	M.RESISTOR CH 1/10W 22K	1	
R144		ERJ6GEYJ103	M.RESISTOR CH 1/10W 10K	1	
R145		ERJ6GEYJ563	M.RESISTOR CH 1/10W 56K	1	
R146		ERJ6GEYJ562	M.RESISTOR CH 1/10W 5.6K	1	
R147,48		ERJ6GEYJ273	M.RESISTOR CH 1/10W 27K	2	
R150		ERJ6GEYJ183	M.RESISTOR CH 1/10W 18K	1	
R151		ERJ6GEYJ103	M.RESISTOR CH 1/10W 10K	1	
R152		ERJ6GEYJ824	M.RESISTOR CH 1/10W 820K	1	
R153		ERJ6GEYJ562	M.RESISTOR CH 1/10W 5.6K	1	
R154-56		ERJ6GEYJ393	M.RESISTOR CH 1/10W 39K	3	
R157		ERJ6GEYJ103	M.RESISTOR CH 1/10W 10K	1	
R158		ERJ6GEYJ183	M.RESISTOR CH 1/10W 18K	1	
R159		ERJ6GEYJ682	M.RESISTOR CH 1/10W 6.8K	1	
R160		ERJ6GEYJ183	M.RESISTOR CH 1/10W 18K	1	
R161		ERJ6GEYJ103	M.RESISTOR CH 1/10W 10K	1	
R162		ERJ6GEYJ563	M.RESISTOR CH 1/10W 56K	1	
R163		ERJ6GEYJ103	M.RESISTOR CH 1/10W 10K	1	
R164		ERJ6GEYJ562	M.RESISTOR CH 1/10W 5.6K	1	
R165		ERJ6GEYJ333	M.RESISTOR CH 1/10W 33K	1	
R166		ERJ6GEYJ222	M.RESISTOR CH 1/10W 2.2K	1	
R167		ERJ6GEYJ183	M.RESISTOR CH 1/10W 18K	1	
R168		ERJ6GEYJ273	M.RESISTOR CH 1/10W 27K	1	
R169		ERJ6GEYJ103	M.RESISTOR CH 1/10W 10K	1	
R170,71		ERJ6GEYJ563	M.RESISTOR CH 1/10W 56K	2	
R172		ERJ6GEYJ102	M.RESISTOR CH 1/10W 1K	1	
R181,82		ERJ6GEYJ563	M.RESISTOR CH 1/10W 56K	2	
R183		ERJ6GEYJ102	M.RESISTOR CH 1/10W 1K	1	
R184		ERJ6GEYJ563	M.RESISTOR CH 1/10W 56K	1	
R185		ERJ6GEYJ104	M.RESISTOR CH 1/10W 100K	1	
R186		ERJ6GEYJ102	M.RESISTOR CH 1/10W 1K	1	
R187,88		ERJ6GEYJ822	M.RESISTOR CH 1/10W 8.2K	2	
R189		ERJ6GEYJ561	M.RESISTOR CH 1/10W 560	1	
R190		ERJ6GEYJ472	M.RESISTOR CH 1/10W 4.7K	1	
R191,92		ERJ6GEYJ563	M.RESISTOR CH 1/10W 56K	2	
R193,94		ERJ6GEYJ273	M.RESISTOR CH 1/10W 27K	2	
R195		ERJ6GEYJ562	M.RESISTOR CH 1/10W 5.6K	1	
R196		ERJ6GEYJ153	M.RESISTOR CH 1/10W 15K	1	
R197		ERJ6GEYJ332	M.RESISTOR CH 1/10W 3.3K	1	
R204		ERJ6GEYJ562	M.RESISTOR CH 1/10W 5.6K	1	
R205		ERJ6GEYJ101	M.RESISTOR CH 1/10W 100	1	
R206		ERJ6GEYJ104	M.RESISTOR CH 1/10W 100K	1	
R207-09		ERJ6GEYJ102	M.RESISTOR CH 1/10W 1K	3	
R210		ERJ6GEYJ153	M.RESISTOR CH 1/10W 15K	1	
R211		ERJ6GEYJ183	M.RESISTOR CH 1/10W 18K	1	
R212		ERJ6GEYJ683	M.RESISTOR CH 1/10W 68K	1	
R213-15		ERJ6GEYJ563	M.RESISTOR CH 1/10W 56K	3	
R216		ERJ6GEYJ105	M.RESISTOR CH 1/10W 1M	1	
R222-27		ERJ6GEYJ563	M.RESISTOR CH 1/10W 56K	6	
R228		ERJ6GEYJ104	M.RESISTOR CH 1/10W 100K	1	
R229		ERJ6GEYJ223	M.RESISTOR CH 1/10W 22K	1	
R230		ERJ6GEYJ563	M.RESISTOR CH 1/10W 56K	1	
R231		ERJ6GEYJ104	M.RESISTOR CH 1/10W 100K	1	
R232		VRE0034E272	M.RESISTOR CH 1/10W 2.7K	1	
R233		VRE0034E104	M.RESISTOR CH 1/10W 100K	1	
R234		VRE0034E272	M.RESISTOR CH 1/10W 2.7K	1	
R235		VRE0034E104	M.RESISTOR CH 1/10W 100K	1	
R236		ERJ6GEYJ563	M.RESISTOR CH 1/10W 56K	1	
R237		ERJ6GEYJ824	M.RESISTOR CH 1/10W 820K	1	
R238		ERJ6GEYJ102	M.RESISTOR CH 1/10W 1K	1	
R239		ERJ6GEYJ103	M.RESISTOR CH 1/10W 10K	1	
R240		ERJ6GEYJ222	M.RESISTOR CH 1/10W 2.2K	1	
R241		ERJ6GEYJ104	M.RESISTOR CH 1/10W 100K	1	
R242		ERJ6GEYJ334	M.RESISTOR CH 1/10W 330K	1	
R243		ERJ6GEYJ101	M.RESISTOR CH 1/10W 100	1	
R244,45		ERJ6GEYJ103	M.RESISTOR CH 1/10W 10K	2	
R246		ERJ6GEYJ102	M.RESISTOR CH 1/10W 1K	1	
R247		ERJ6GEYJ103	M.RESISTOR CH 1/10W 10K	1	
R248		ERJ6GEYJ562	M.RESISTOR CH 1/10W 5.6K	1	
R249		ERJ6GEYJ392	M.RESISTOR CH 1/10W 3.9K	1	
R250		ERJ6GEYJ184	M.RESISTOR CH 1/10W 180K	1	
R251		ERJ6GEYJ224	M.RESISTOR CH 1/10W 220K	1	
R252		ERJ6GEYJ153	M.RESISTOR CH 1/10W 15K	1	
R253		ERJ6GEYJ474	M.RESISTOR CH 1/10W 470K	1	
R254-58		ERJ6GEYJ103	M.RESISTOR CH 1/10W 10K	5	
R259		ERJ6GEYJ223	M.RESISTOR CH 1/10W 22K	1	

Ref.No.		Part No.	Part Name & Description	Pcs	Remarks
R260		ERJ6GEYJ393	M.RESISTOR CH 1/10W 39K	1	
R261		ERJ6GEYJ823	M.RESISTOR CH 1/10W 82K	1	
R262		ERJ6GEYJ123	M.RESISTOR CH 1/10W 12K	1	
R263		ERJ6GEYJ183	M.RESISTOR CH 1/10W 18K	1	
R264		ERJ6GEYJ333	M.RESISTOR CH 1/10W 33K	1	
R265		ERJ6GEYJ683	M.RESISTOR CH 1/10W 68K	1	
R266-69		ERJ6GEYJ563	M.RESISTOR CH 1/10W 56K	4	
R270		ERJ6GEYJ562	M.RESISTOR CH 1/10W 5.6K	1	
R271		ERJ6GEYJ103	M.RESISTOR CH 1/10W 10K	1	
R273		ERJ6GEYJ393	M.RESISTOR CH 1/10W 39K	1	
R274		ERJ6GEYJ103	M.RESISTOR CH 1/10W 10K	1	
R275		ERJ6GEYJ563	M.RESISTOR CH 1/10W 56K	1	
R276,77		VRE0034E102	M.RESISTOR CH 1/10W 1K	2	
R278		ERJ6GEYJ103	M.RESISTOR CH 1/10W 10K	1	
R279-82		ERJ6GEYJ563	M.RESISTOR CH 1/10W 56K	4	
R283		ERJ6GEYJ103	M.RESISTOR CH 1/10W 10K	1	
R284		ERJ6GEYJ272	M.RESISTOR CH 1/10W 2.7K	1	
R285		ERJ6GEYJ122	M.RESISTOR CH 1/10W 1.2K	1	
R286		ERJ6GEYJ472	M.RESISTOR CH 1/10W 4.7K	1	
R301		ERJ6GEYJ563	M.RESISTOR CH 1/10W 56K	1	
R302,03		ERJ6GEYJ103	M.RESISTOR CH 1/10W 10K	2	
R304		ERJ6GEYJ563	M.RESISTOR CH 1/10W 56K	1	
R305		ERJ6GEYJ104	M.RESISTOR CH 1/10W 100K	1	
R306		ERJ6GEYJ683	M.RESISTOR CH 1/10W 68K	1	
R307		ERJ6GEYJ223	M.RESISTOR CH 1/10W 22K	1	
R308		ERJ6GEYJ103	M.RESISTOR CH 1/10W 10K	1	
R309		ERJ6GEYJ472	M.RESISTOR CH 1/10W 4.7K	1	
R310		ERJ6GEYJ822	M.RESISTOR CH 1/10W 8.2K	1	
R311		ERJ6GEYJ392	M.RESISTOR CH 1/10W 3.9K	1	
R312		ERJ6GEYJ153	M.RESISTOR CH 1/10W 15K	1	
R313		ERJ6GEYJ332	M.RESISTOR CH 1/10W 3.3K	1	
R314		ERJ6GEYJ151	M.RESISTOR CH 1/10W 150	1	
R315,16		ERJ6GEYJ103	M.RESISTOR CH 1/10W 10K	2	
R317		ERJ6GEYJ683	M.RESISTOR CH 1/10W 68K	1	
R318		ERJ6GEYJ103	M.RESISTOR CH 1/10W 10K	1	
R319		ERJ6GEYJ273	M.RESISTOR CH 1/10W 27K	1	
R320		ERJ6GEYJ104	M.RESISTOR CH 1/10W 100K	1	
R321		ERJ6GEYJ223	M.RESISTOR CH 1/10W 22K	1	
R322		ERJ6GEYJ124	M.RESISTOR CH 1/10W 120K	1	
R325,26		VRE0034E332	M.RESISTOR CH 1/10W 3.3K	2	
R327		ERJ6GEYJ223	M.RESISTOR CH 1/10W 22K	1	
R328		ERJ6GEYJ104	M.RESISTOR CH 1/10W 100K	1	
R329		ERJ6GEYJ393	M.RESISTOR CH 1/10W 39K	1	
R330		ERJ6GEYJ334	M.RESISTOR CH 1/10W 330K	1	
R331		ERJ6GEYJ474	M.RESISTOR CH 1/10W 470K	1	
R332,33		ERJ6GEYJ104	M.RESISTOR CH 1/10W 100K	2	
R334		ERJ6GEYJ105	M.RESISTOR CH 1/10W 1M	1	
R335		ERJ6GEYJ684	M.RESISTOR CH 1/10W 680K	1	
R336		ERJ6GEYJ473	M.RESISTOR CH 1/10W 47K	1	
R337,38		ERJ6GEYJ103	M.RESISTOR CH 1/10W 10K	2	
R339,40		VRE0034E332	M.RESISTOR CH 1/10W 3.3K	2	
R341		ERJ6GEYJ223	M.RESISTOR CH 1/10W 22K	1	
R342		ERJ6GEYJ104	M.RESISTOR CH 1/10W 100K	1	
R343		ERJ6GEYJ473	M.RESISTOR CH 1/10W 47K	1	
R344		ERJ6GEYJ334	M.RESISTOR CH 1/10W 330K	1	
R345		ERJ6GEYJ474	M.RESISTOR CH 1/10W 470K	1	
R346		ERJ6GEYJ104	M.RESISTOR CH 1/10W 100K	1	
R347		ERJ6GEYJ105	M.RESISTOR CH 1/10W 1M	1	
R348		ERJ6GEYJ684	M.RESISTOR CH 1/10W 680K	1	
R349,50		ERJ6GEYJ103	M.RESISTOR CH 1/10W 10K	2	
R351		ERJ6GEYJ472	M.RESISTOR CH 1/10W 4.7K	1	
R352-55		ERJ6GEYJ103	M.RESISTOR CH 1/10W 10K	4	
R356		ERJ6GEYJ222	M.RESISTOR CH 1/10W 2.2K	1	
R357		ERJ6GEYJ223	M.RESISTOR CH 1/10W 22K	1	
R358		ERJ6GEYJ104	M.RESISTOR CH 1/10W 100K	1	
R359-63		ERJ6GEYJ103	M.RESISTOR CH 1/10W 10K	5	
R365		ERJ6GEYJ104	M.RESISTOR CH 1/10W 100K	1	
R366		ERJ6GEYJ103	M.RESISTOR CH 1/10W 10K	1	
R367,68		ERJ6GEYJ563	M.RESISTOR CH 1/10W 56K	2	
R369		ERJ6GEYJ104	M.RESISTOR CH 1/10W 100K	1	
R370-74		ERJ6GEYJ103	M.RESISTOR CH 1/10W 10K	5	
R376		ERJ6GEYJ104	M.RESISTOR CH 1/10W 100K	1	
R378,79		ERJ6GEYJ563	M.RESISTOR CH 1/10W 56K	2	
R380		ERJ6GEYJ103	M.RESISTOR CH 1/10W 10K	1	
R381		ERJ6GEYJ473	M.RESISTOR CH 1/10W 47K	1	

Refer to the P.C.BOARDS LIST, page 6-1-1, before using this page.

Ref.No.		Part No.	Part Name & Description	Pcs	Remarks
R382		ERJ6GEYJ683	M.RESISTOR CH 1/10W 68K	1	
R383		ERJ6GEYJ152	M.RESISTOR CH 1/10W 1.5K	1	
R386		ERJ6GEYJ182	M.RESISTOR CH 1/10W 1.8K	1	
R388		ERJ6GEYJ223	M.RESISTOR CH 1/10W 22K	1	
R389		ERJ6GEYJ153	M.RESISTOR CH 1/10W 15K	1	
R390		ERJ6GEYJ223	M.RESISTOR CH 1/10W 22K	1	
R391		ERJ6GEYJ153	M.RESISTOR CH 1/10W 15K	1	
R392,93		ERJ6GEYJ103	M.RESISTOR CH 1/10W 10K	2	
R394,95		VRE0034E102	M.RESISTOR CH 1/10W 1K	2	
R396,97		VRE0034E472	M.RESISTOR CH 1/10W 4.7K	2	
R398		ERJ6GEYJ334	M.RESISTOR CH 1/10W 330K	1	
R399		ERJ6GEYJ333	M.RESISTOR CH 1/10W 33K	1	
R405		ERJ6GEYJ333	M.RESISTOR CH 1/10W 33K	1	
R406		ERJ6GEYJ103	M.RESISTOR CH 1/10W 10K	1	
R407		ERJ6GEYJ333	M.RESISTOR CH 1/10W 33K	1	
R408,09		ERJ6GEYJ103	M.RESISTOR CH 1/10W 10K	2	
R410		ERJ6GEYJ183	M.RESISTOR CH 1/10W 18K	1	
R421		ERJ6GEYJ221	M.RESISTOR CH 1/10W 220	1	
R423		ERJ6GEYJ221	M.RESISTOR CH 1/10W 220	1	
R424		ERJ6GEYJ222	M.RESISTOR CH 1/10W 2.2K	1	
R425		ERJ6GEYJ563	M.RESISTOR CH 1/10W 56K	1	
R427		ERJ6GEYJ333	M.RESISTOR CH 1/10W 33K	1	
R428		ERJ6GEYJ223	M.RESISTOR CH 1/10W 22K	1	
R431		ERJ6GEYJ563	M.RESISTOR CH 1/10W 56K	1	
R432,33		ERJ6GEYJ393	M.RESISTOR CH 1/10W 39K	2	
R434		ERJ6GEYJ331	M.RESISTOR CH 1/10W 330	1	
R435		ERJ6GEYJ103	M.RESISTOR CH 1/10W 10K	1	
R437		ERJ6GEYJ684	M.RESISTOR CH 1/10W 680K	1	
R440		ERJ6GEYJ562	M.RESISTOR CH 1/10W 5.6K	1	
R441,42		ERJ6GEYJ105	M.RESISTOR CH 1/10W 1M	2	
R443		ERJ6GEYJ223	M.RESISTOR CH 1/10W 22K	1	
R463		ERDS2TJ331	C.RESISTOR 1/4W 330	1	
R469		ERDS2TJ564	C.RESISTOR 1/4W 560K	1	
R470		ERDS2TJ394	C.RESISTOR 1/4W 390K	1	
R501		ERJ6GEYJ102	M.RESISTOR CH 1/10W 1K	1	
R502		ERJ6GEYJ103	M.RESISTOR CH 1/10W 10K	1	
R503		ERJ6GEYJ102	M.RESISTOR CH 1/10W 1K	1	
R504-07		ERJ6GEYJ821	M.RESISTOR CH 1/10W 820	4	
R508		ERJ6GEYJ473	M.RESISTOR CH 1/10W 47K	1	
R509-12		ERJ6GEYJ391	M.RESISTOR CH 1/10W 390	4	
R513		ERJ6GEYJ103	M.RESISTOR CH 1/10W 10K	1	
R514		ERJ6GEYJ224	M.RESISTOR CH 1/10W 220K	1	
R515		ERJ6GEYJ273	M.RESISTOR CH 1/10W 27K	1	
R516		ERJ6GEYJ103	M.RESISTOR CH 1/10W 10K	1	
R517		ERJ6GEYJ272	M.RESISTOR CH 1/10W 2.7K	1	
R518		ERJ6GEYJ104	M.RESISTOR CH 1/10W 100K	1	
R519		ERJ6GEYJ392	M.RESISTOR CH 1/10W 3.9K	1	
R520		ERJ6GEYJ333	M.RESISTOR CH 1/10W 33K	1	
R521,22		ERJ6GEYJ224	M.RESISTOR CH 1/10W 220K	2	
R523		ERX12SJR47	M.RESISTOR 1/2W 0.47	1	
R524		ERJ6GEYJ273	M.RESISTOR CH 1/10W 27K	1	
R525		ERJ6GEYJ272	M.RESISTOR CH 1/10W 2.7K	1	
R526		ERJ6GEYJ103	M.RESISTOR CH 1/10W 10K	1	
R527		ERJ6GEYJ104	M.RESISTOR CH 1/10W 100K	1	
R528		ERJ6GEYJ224	M.RESISTOR CH 1/10W 220K	1	
R529		ERJ6GEYJ392	M.RESISTOR CH 1/10W 3.9K	1	
R530		ERJ6GEYJ223	M.RESISTOR CH 1/10W 22K	1	
R531		ERJ6GEYJ224	M.RESISTOR CH 1/10W 220K	1	
R532		ERX12SJR68	M.RESISTOR 1/2W 0.68	1	
R533		ERJ6GEYJ224	M.RESISTOR CH 1/10W 220K	1	
R534		ERJ6GEYJ273	M.RESISTOR CH 1/10W 27K	1	
R535		ERJ6GEYJ103	M.RESISTOR CH 1/10W 10K	1	
R536		ERJ6GEYJ104	M.RESISTOR CH 1/10W 100K	1	
R537		ERX12SJR47	M.RESISTOR 1/2W 0.47	1	
R538-40		ERJ6GEYJ224	M.RESISTOR CH 1/10W 220K	3	
R541		ERJ6GEYJ272	M.RESISTOR CH 1/10W 2.7K	1	
R542		ERJ6GEYJ223	M.RESISTOR CH 1/10W 22K	1	
R543		ERJ6GEYJ273	M.RESISTOR CH 1/10W 27K	1	
R544		ERJ6GEYJ104	M.RESISTOR CH 1/10W 100K	1	
R545		ERJ6GEYJ103	M.RESISTOR CH 1/10W 10K	1	
R546		ERX12SJR47	M.RESISTOR 1/2W 0.47	1	
R547-49		ERJ6GEYJ224	M.RESISTOR CH 1/10W 220K	3	
R550		ERJ6GEYJ272	M.RESISTOR CH 1/10W 2.7K	1	
R551		ERJ6GEYJ223	M.RESISTOR CH 1/10W 22K	1	
R552		ERX1ANJ6R8	M.RESISTOR 1W 6.8	1	

Ref.No.		Part No.	Part Name & Description	Pcs	Remarks
R553		ERJ6GEY0R00	M.RESISTOR CH 1/10W 0	1	
R554		ERJ6GEYJ272	M.RESISTOR CH 1/10W 2.7K	1	
R555-57		ERJ6GEY0R00	M.RESISTOR CH 1/10W 0	3	
SW1,W2		VSR0032	VOLTAGE SELECT SWITCH	2	
TP3-P7		VJR0582	PACK PIN	5	
TP13		VJR0582	PACK PIN	1	
TP15-17		VJR0582	PACK PIN	3	
TP19,20		VJR0582	PACK PIN	2	
TP102-05		VJR0582	PACK PIN	4	
TP108-18		VJR0582	PACK PIN	11	
TP201,02		VJR0582	PACK PIN	2	
TP302-04		VJR0582	PACK PIN	3	
TP306		VJR0582	PACK PIN	1	
TP309-12		VJR0582	PACK PIN	4	
TPG1-G3		VJR0582	PACK PIN	3	
VC101		ECV1ZW30X53	V.CAPACITOR 30P	1	
VR1		VRV0109B503	V.RESISTOR 50K	1	
VR3		VRV0109B203	V.RESISTOR 20K	1	
VR101		VRV0109B203	V.RESISTOR 20K	1	
VR102		VRV0109B103	V.RESISTOR 10K	1	
VR103		VRV0109B203	V.RESISTOR 20K	1	
VR104		VRV0109B502	V.RESISTOR 5K	1	
VR105		VRV0109B104	V.RESISTOR 100K	1	
VR301		VRV0109B502	V.RESISTOR 5K	1	
VR302,03		VRV0109B202	V.RESISTOR 2K	2	
VR304-07		VRV0109B503	V.RESISTOR 50K	4	
VR308		VRV0109B202	V.RESISTOR 2K	1	
X101		VSX0081	CRYSTAL OSCILLATOR	1	
X501		VSX0136	CRYSTAL OSCILLATOR	1	
			MISCELLANEOUS		
		VJR0421	PIN	4	
		VML2143	CARD PULLER	1	
		VML2144	CARD PULLER	1	
		VMS4174	PIN	6	
		VMZ1091	BARRIER	1	
		VMZ1547	BARRIER	1	
		VSC2286	SHIELD CASE	1	
		VSC3056	SHIELD CASE	1	
		VXA3966	P.C.B. SHIELD PLATE	1	
		XNG26E	NUT	4	
		XYNV3+K6FR	SCREW	6	
		XYN26+C12	SCREW	4	

Refer to the P.C.BOARDS LIST, page 6-1-1, before using this page.

Ref.No.		Part No.	Part Name & Description	Pcs	Remarks
	■	VEP82061D	P.C.BOARD W/COMPONENT		FOR AU-63-P
			W5 SERVO		
			CAPACITORS		
C1		ECQM1H273JF	P.CAPACITOR 50V 0.027U	1	
C1,C2		ECUM1H103ZFN	C.CAPACITOR CH 50V 0.01U	2	
C2		ECUM1H152JN	C.CAPACITOR CH 50V 1500P	1	
C3,C4		ECUM1H101JCN	C.CAPACITOR CH 50V 100P	2	
C5		ECEA1CU100	E.CAPACITOR 16V 10U	1	
C6		ECEA0JU101	E.CAPACITOR 6.3V 100U	1	
C7		ECEA1AU470	E.CAPACITOR 10V 47U	1	
C8		ECUM1H103ZFN	C.CAPACITOR CH 50V 0.01U	1	
C9		ECQM1H154JF	P.CAPACITOR 50V 0.15U	1	
C10		ECEA1HN2R2S	E.CAPACITOR 50V 2.2U	1	
C11		ECQM1H223JF	P.CAPACITOR 50V 0.022U	1	
C13		ECQP1H822JZ	P.CAPACITOR 50V 8200P	1	
C14		ECQM1H682JV	P.CAPACITOR 50V 6800P	1	
C15,16		ECUM1H103ZFN	C.CAPACITOR CH 50V 0.01U	2	
C17		ECQM1H394JV	P.CAPACITOR 50V 0.39U	1	
C18		ECEA1HU4R7	E.CAPACITOR 50V 4.7U	1	
C19		ECEA1AU470	E.CAPACITOR 10V 47U	1	
C20,21		ECUM1H103ZFN	C.CAPACITOR CH 50V 0.01U	2	
C22		ECEA1HU2R2	E.CAPACITOR 50V 2.2U	1	
C23,24		ECUM1E104ZFN	C.CAPACITOR CH 25V 0.1U	2	
C25		ECUM1H103ZFN	C.CAPACITOR CH 50V 0.01U	1	
C26		ECEA1AU470	E.CAPACITOR 10V 47U	1	
C27		ECUM1H103ZFN	C.CAPACITOR CH 50V 0.01U	1	
C28		ECEA1AU470	E.CAPACITOR 10V 47U	1	
C29		ECEA1AU330	E.CAPACITOR 10V 33U	1	
C30		ECUM1H103ZFN	C.CAPACITOR CH 50V 0.01U	1	
C31		ECEA1AU330	E.CAPACITOR 10V 33U	1	
C32		ECEA1AU470	E.CAPACITOR 10V 47U	1	
C33		ECUM1H103ZFN	C.CAPACITOR CH 50V 0.01U	1	
C34		ECEA1AU470	E.CAPACITOR 10V 47U	1	
C39		ECUM1H331JCN	C.CAPACITOR CH 50V 330P	1	
C40-42		ECUM1H103ZFN	C.CAPACITOR CH 50V 0.01U	3	
C43		ECUM1H101JCN	C.CAPACITOR CH 50V 100P	1	
C46		ECEA1CU470	E.CAPACITOR 16V 47U	1	
C47,48		ECUM1E104ZFN	C.CAPACITOR CH 25V 0.1U	2	
C101		ECQM1H104JF	P.CAPACITOR 50V 0.1U	1	
C102		ECUM1H151JCN	C.CAPACITOR CH 50V 150P	1	
C103		ECEA1CU470	E.CAPACITOR 16V 47U	1	
C104		ECEA1HU2R2	E.CAPACITOR 50V 2.2U	1	
C105		ECEA1CU101	E.CAPACITOR 16V 100U	1	
C106		ECQM1H104JF	P.CAPACITOR 50V 0.1U	1	
C107		ECUM1H151JCN	C.CAPACITOR CH 50V 150P	1	
C108		ECUM1H102JCN	C.CAPACITOR CH 50V 1000P	1	
C109		ECUM1H221JCN	C.CAPACITOR CH 50V 220P	1	
C110		ECQM1H103JF	P.CAPACITOR 50V 0.01U	1	
C111		ECEA1HU010	E.CAPACITOR 50V 1U	1	
C112		ECQM1H154JF	P.CAPACITOR 50V 0.15U	1	
C113		ECEA1HU010	E.CAPACITOR 50V 1U	1	
C114		ECEA1CU470	E.CAPACITOR 16V 47U	1	
C115		ECUM1H103ZFN	C.CAPACITOR CH 50V 0.01U	1	
C116		ECEA1CU470	E.CAPACITOR 16V 47U	1	
C117		ECUM1H103ZFN	C.CAPACITOR CH 50V 0.01U	1	
C118		ECEA1CU470	E.CAPACITOR 16V 47U	1	
C119		ECUM1H103ZFN	C.CAPACITOR CH 50V 0.01U	1	
C120		ECEA1CU470	E.CAPACITOR 16V 47U	1	
C121		ECUM1H103ZFN	C.CAPACITOR CH 50V 0.01U	1	
C122		ECEA1CU470	E.CAPACITOR 16V 47U	1	
C123		ECUM1H330JCN	C.CAPACITOR CH 50V 33P	1	
C124		ECUM1H103ZFN	C.CAPACITOR CH 50V 0.01U	1	
C125		ECEA1CU470	E.CAPACITOR 16V 47U	1	
C126		ECQM1H562JF	P.CAPACITOR 50V 5600P	1	
C127		ECQM1H393JF	P.CAPACITOR 50V 0.039U	1	
C128		ECQM1H104JF	P.CAPACITOR 50V 0.1U	1	
C129		ECEA10M22	E.CAPACITOR 10V 22U	1	

Ref.No.		Part No.	Part Name & Description	Pcs	Remarks
C130		ECEA1HU010	E.CAPACITOR 50V 1U	1	
C131		ECEA1EN220S	E.CAPACITOR 25V 22U	1	
C132		ECQM1H103JF	P.CAPACITOR 50V 0.01U	1	
C133-36		ECUM1H103ZFN	C.CAPACITOR CH 50V 0.01U	4	
C137		ECEA1CU101	E.CAPACITOR 16V 100U	1	
C139		ECQM1H822JF	P.CAPACITOR 50V 8200P	1	
C140		ECUM1H102JCN	C.CAPACITOR CH 50V 1000P	1	
C141		ECEA1HN010S	E.CAPACITOR 50V 1U	1	
C143		ECEA1CU470	E.CAPACITOR 16V 47U	1	
C145		ECEA1AU470	E.CAPACITOR 10V 47U	1	
C146		ECUM1H103ZFN	C.CAPACITOR CH 50V 0.01U	1	
C147		ECEA1HUR47	E.CAPACITOR 50V 0.47U	1	
C148		ECEA1CU470	E.CAPACITOR 16V 47U	1	
C149,50		ECUM1H103ZFN	C.CAPACITOR CH 50V 0.01U	2	
C151		ECEA1HN010S	E.CAPACITOR 50V 1U	1	
C152,53		ECUM1H103ZFN	C.CAPACITOR CH 50V 0.01U	2	
C154		ECUM1H152KBN	C.CAPACITOR CH 50V 1500P	1	
C155		ECEA1HN100S	E.CAPACITOR 50V 10U	1	
C156		ECEA1HUR47	E.CAPACITOR 50V 0.47U	1	
C157,58		ECUM1H103ZFN	C.CAPACITOR CH 50V 0.01U	2	
C159		ECQM1H104JF	P.CAPACITOR 50V 0.1U	1	
C160		ECUM1H103ZFN	C.CAPACITOR CH 50V 0.01U	1	
C161		ECQM1H104JF	P.CAPACITOR 50V 0.1U	1	
C162,63		ECQM1H103JF	P.CAPACITOR 50V 0.01U	2	
C164		ECEA1HU4R7	E.CAPACITOR 50V 4.7U	1	
C165-67		ECUM1H103ZFN	C.CAPACITOR CH 50V 0.01U	3	
C168		ECEA1EU100	E.CAPACITOR 25V 10U	1	
C169		ECUM1H103KBN	C.CAPACITOR CH 50V 0.01U	1	
C170		ECUM1H471JCN	C.CAPACITOR CH 50V 470P	1	
C171,72		ECUM1H103ZFN	C.CAPACITOR CH 50V 0.01U	2	
C173		ECUM1H101JCN	C.CAPACITOR CH 50V 100P	1	
C174		ECUM1H103ZFN	C.CAPACITOR CH 50V 0.01U	1	
C175		ECQM1H184JF	P.CAPACITOR 50V 0.18U	1	
C176		ECEA1CU470	E.CAPACITOR 16V 47U	1	
C177		ECQM1H222JF	P.CAPACITOR 50V 2200P	1	
C301		ECEA1AU330	E.CAPACITOR 10V 33U	1	
C302		ECUM1H103ZFN	C.CAPACITOR CH 50V 0.01U	1	
C303		ECQM1H562JF	P.CAPACITOR 50V 5600P	1	
C304		ECQM1H392JF	P.CAPACITOR 50V 3900P	1	
C305		ECUM1H103ZFN	C.CAPACITOR CH 50V 0.01U	1	
C306		ECQM1H123JF	P.CAPACITOR 50V 0.012U	1	
C307		ECEA1CN470S	E.CAPACITOR 16V 47U	1	
C308		ECEA0JU221	E.CAPACITOR 6.3V 220U	1	
C309		ECEA1HU2R2	E.CAPACITOR 50V 2.2U	1	
C310		ECQM1H104JF	P.CAPACITOR 50V 0.1U	1	
C311		ECUM1H153KBN	C.CAPACITOR CH 50V 0.015U	1	
C312		ECEA1HN010S	E.CAPACITOR 50V 1U	1	
C313,14		ECUM1H103ZFN	C.CAPACITOR CH 50V 0.01U	2	
C315		ECQM1H104JF	P.CAPACITOR 50V 0.1U	1	
C316		ECUM1E273KBN	C.CAPACITOR CH 25V 0.027U	1	
C317		ECEA1HN2R2S	E.CAPACITOR 50V 2.2U	1	
C318-20		ECUM1H103ZFN	C.CAPACITOR CH 50V 0.01U	3	
C321		ECEA1CU100	E.CAPACITOR 16V 10U	1	
C322		ECEA0JU470	E.CAPACITOR 6.3V 47U	1	
C323		ECUM1H103ZFN	C.CAPACITOR CH 50V 0.01U	1	
C324		ECEA0JU102	E.CAPACITOR 6.3V 1000U	1	
C325		ECUM1H103ZFN	C.CAPACITOR CH 50V 0.01U	1	
C327		ECEA1HU2R2	E.CAPACITOR 50V 2.2U	1	
C328,29		ECEA1CU100	E.CAPACITOR 16V 10U	2	
C330-36		ECUM1H103ZFN	C.CAPACITOR CH 50V 0.01U	7	
C337		ECEA1HU2R2	E.CAPACITOR 50V 2.2U	1	
C338,39		ECEA1CU100	E.CAPACITOR 16V 10U	2	
C401-03		ECUM1H103ZFN	C.CAPACITOR CH 50V 0.01U	3	
C406		ECUM1H103ZFN	C.CAPACITOR CH 50V 0.01U	1	
C408-10		ECUM1H103ZFN	C.CAPACITOR CH 50V 0.01U	3	
C454		ECUM1H103ZFN	C.CAPACITOR CH 50V 0.01U	1	
C492		ECUM1H103ZFN	C.CAPACITOR CH 50V 0.01U	1	
C495,96		ECUM1H103ZFN	C.CAPACITOR CH 50V 0.01U	2	
C501		ECUM1H103ZFN	C.CAPACITOR CH 50V 0.01U	1	
C502		ECEA1CU470	E.CAPACITOR 16V 47U	1	
C503		ECEA1ESS471	E.CAPACITOR 25V 470U	1	
C504		ECUM1E473KBN	C.CAPACITOR CH 25V 0.047U	1	
C505		ECUM1H561JCN	C.CAPACITOR CH 50V 560P	1	
C506		ECUM1H820JCN	C.CAPACITOR CH 50V 82P	1	
C507		ECUM1H561JCN	C.CAPACITOR CH 50V 560P	1	

Refer to the P.C.BOARDS LIST, page 6-1-1, before using this page.

Ref.No.		Part No.	Part Name & Description	Pcs	Remarks
C508		ECEA1HU010	E.CAPACITOR 50V 1U	1	
C509-13		ECEA1ESS101	E.CAPACITOR 25V 100U	5	
C514		ECQM1H104JF	P.CAPACITOR 50V 0.1U	1	
C515		ECEA1EU4R7	E.CAPACITOR 25V 4.7U	1	
C516-18		ECEA1HN4R7S	E.CAPACITOR 50V 4.7U	3	
C519		ECEA1HU010	E.CAPACITOR 50V 1U	1	
C520-22		ECUM1H103KBN	C.CAPACITOR CH 50V 0.01U	3	
C523		ECQM1H104JF	P.CAPACITOR 50V 0.1U	1	
C524		ECEA1EU4R7	E.CAPACITOR 25V 4.7U	1	
C525,26		ECEA1HN4R7S	E.CAPACITOR 50V 4.7U	2	
C527		ECQM1H104JF	P.CAPACITOR 50V 0.1U	1	
C528		ECEA1HU010	E.CAPACITOR 50V 1U	1	
C529-31		ECUM1H103KBN	C.CAPACITOR CH 50V 0.01U	3	
C532		ECEA1EU4R7	E.CAPACITOR 25V 4.7U	1	
C533,34		ECEA1HN4R7S	E.CAPACITOR 50V 4.7U	2	
C535		ECQM1H104JF	P.CAPACITOR 50V 0.1U	1	
C536		ECEA1HU010	E.CAPACITOR 50V 1U	1	
C537-39		ECUM1H103KBN	C.CAPACITOR CH 50V 0.01U	3	
C540		ECEA1EU4R7	E.CAPACITOR 25V 4.7U	1	
C541-43		ECEA1HN4R7S	E.CAPACITOR 50V 4.7U	3	
C544		ECQM1H104JF	P.CAPACITOR 50V 0.1U	1	
C545		ECEA1HU010	E.CAPACITOR 50V 1U	1	
C546-48		ECUM1H103KBN	C.CAPACITOR CH 50V 0.01U	3	
C549		ECEA1AU470	E.CAPACITOR 10V 47U	1	
C550		ECUM1E473KBN	C.CAPACITOR CH 25V 0.047U	1	
C551		ECEA1HN4R7S	E.CAPACITOR 50V 4.7U	1	
C552		ECQM1H104JF	P.CAPACITOR 50V 0.1U	1	
C553		ECEA1HN4R7S	E.CAPACITOR 50V 4.7U	1	
C554		ECUM1H103ZFN	C.CAPACITOR CH 50V 0.01U	1	
C555		ECEA1VU101	E.CAPACITOR 35V 100U	1	
C558-63		ECQM1H104JF	P.CAPACITOR 50V 0.1U	6	
C700		ECUM1H101JCN	C.CAPACITOR CH 50V 100P	1	
C701		ECQM1H104JF	P.CAPACITOR 50V 0.1U	1	
C702		ECUM1H103ZFN	C.CAPACITOR CH 50V 0.01U	1	
C703		ECEA1HN4R7S	E.CAPACITOR 50V 4.7U	1	
C704		ECUM1H103ZFN	C.CAPACITOR CH 50V 0.01U	1	
C705		ECQM1H682JF	P.CAPACITOR 50V 6800P	1	
C706-08		ECUM1H103ZFN	C.CAPACITOR CH 50V 0.01U	3	
C709		ECQP1H151JZ	P.CAPACITOR 50V 150U	1	
C710,11		ECUM1H103ZFN	C.CAPACITOR CH 50V 0.01U	2	
C712,13		ECQP1H151JZ	P.CAPACITOR 50V 150U	2	
C714-19		ECUM1H103ZFN	C.CAPACITOR CH 50V 0.01U	6	
C720		ECEA1CU220	E.CAPACITOR 16V 22U	1	
C721		ECQM1H122JF	P.CAPACITOR 50V 1200P	1	
C722		ECUM1H103ZFN	C.CAPACITOR CH 50V 0.01U	1	
C723		ECUM1H470JCN	P.CAPACITOR 50V 47P	1	
C724		ECUM1H180JCN	C.CAPACITOR CH 50V 18P	1	
C725		ECUM1H103ZFN	C.CAPACITOR CH 50V 0.01U	1	
C726		ECEA1CU330	E.CAPACITOR 16V 33U	1	
C727		ECQM1H124JF	P.CAPACITOR 50V 0.12U	1	
C728,29		ECUM1H103ZFN	C.CAPACITOR CH 50V 0.01U	2	
C730-32		ECUM1H472KBN	C.CAPACITOR CH 50V 4700P	3	
C733		ECQM1H124JF	P.CAPACITOR 50V 0.12U	1	
C734,35		ECUM1H103ZFN	C.CAPACITOR CH 50V 0.01U	2	
C736		ECQM1H182JF	P.CAPACITOR 50V 1800P	1	
C737		ECEA1HUR33	E.CAPACITOR 50V 0.33U	1	
C738		ECUM1H103ZFN	C.CAPACITOR CH 50V 0.01U	1	
C739		ECEA1CU100	E.CAPACITOR 16V 10U	1	
C740		ECEA1HUR33	E.CAPACITOR 50V 0.33U	1	
C741		ECUM1H103ZFN	C.CAPACITOR CH 50V 0.01U	1	
C742		ECEA1CU100	E.CAPACITOR 16V 10U	1	
C743		ECEA1HUR33	E.CAPACITOR 50V 0.33U	1	
C744		ECUM1H103ZFN	C.CAPACITOR CH 50V 0.01U	1	
C745		ECEA1CU100	E.CAPACITOR 16V 10U	1	
C746,47		ECEA1AU330	E.CAPACITOR 10V 33U	2	
C748		ECEA1HUR33	E.CAPACITOR 50V 0.33U	1	
C749		ECUM1H103ZFN	C.CAPACITOR CH 50V 0.01U	1	
C750		ECEA1CU100	E.CAPACITOR 16V 10U	1	
C751		ECUM1H103KBN	C.CAPACITOR CH 50V 0.01U	1	
C752		ECUM1H330JCN	C.CAPACITOR CH 50V 33P	1	
C753,54		ECEA1AU330	E.CAPACITOR 10V 33U	2	
C755		ECUM1H103KBN	C.CAPACITOR CH 50V 0.01U	1	
C756		ECUM1H103ZFN	C.CAPACITOR CH 50V 0.01U	1	
C757		ECUM1H271JCN	C.CAPACITOR CH 50V 270P	1	
C758		ECUM1H103ZFN	C.CAPACITOR CH 50V 0.01U	1	

Ref.No.		Part No.	Part Name & Description	Pcs	Remarks
C759		ECUM1H103KBN	C.CAPACITOR CH 50V 0.01U	1	
C760		ECUM1H103ZFN	C.CAPACITOR CH 50V 0.01U	1	
C761		ECUM1H330JCN	C.CAPACITOR CH 50V 33P	1	
C762		ECUM1H271JCN	C.CAPACITOR CH 50V 270P	1	
C763,64		ECEA1AU330	E.CAPACITOR 10V 33U	2	
C765		ECUM1H103KBN	C.CAPACITOR CH 50V 0.01U	1	
C900-11		ECUM1H103ZFN	C.CAPACITOR CH 50V 0.01U	12	
D1		MA151K	DIODE	1	
D1		MA151K	DIODE	1	
D2,D3		MA151WA	DIODE	2	
D4		MA151K	DIODE	1	
D4-D6		MA151K	DIODE	3	
D101		MA151K	DIODE	1	
D102		MA153	DIODE	1	
D103		MA151WK	DIODE	1	
D104		MA151K	DIODE	1	
D105		MA151WK	DIODE	1	
D106,07		MA151WA	DIODE	2	
D108		MA151K	DIODE	1	
D109		MA151WK	DIODE	1	
D112		MA151WK	DIODE	1	
D113,14		MA151K	DIODE	2	
D115		MA153	DIODE	1	
D116		MA151K	DIODE	1	
D119		MA151WK	DIODE	1	
D120-22		MA151WA	DIODE	3	
D123		MA151K	DIODE	1	
D124		MA151WA	DIODE	1	
D125		MA151K	DIODE	1	
D126,27		MA153	DIODE	2	
D301,02		MA151K	DIODE	2	
D303		MA151WK	DIODE	1	
D304		MA151WA	DIODE	1	
D305		MA151K	DIODE	1	
D307		MA151WA	DIODE	1	
D309		MA151WK	DIODE	1	
D310		MA151K	DIODE	1	
D313		MA151WA	DIODE	1	
D314-17		MA151WK	DIODE	4	
D318		MA151K	DIODE	1	
D319,20		MA151WK	DIODE	2	
D321,22		MA151K	DIODE	2	
D323,24		MA151WK	DIODE	2	
D325		MA151K	DIODE	1	
D328-30		MA151K	DIODE	3	
D332		MA151K	DIODE	1	
D333		MA151WK	DIODE	1	
D334-37		MA151K	DIODE	4	
D338		MA151WK	DIODE	1	
D340		MA151WA	DIODE	1	
D341		MA151K	DIODE	1	
D349-51		MA165	DIODE	3	
D501		MA151K	DIODE	1	
D502		MA151WK	DIODE	1	
D503		MA153	DIODE	1	
D504		MA151WK	DIODE	1	
D505,06		MA151K	DIODE	2	
D507		MA151WK	DIODE	1	
D508,09		MA151K	DIODE	2	
D510		MA151WK	DIODE	1	
D511		MA151K	DIODE	1	
D514-17		MA701A	DIODE	4	
D572		MA151K	DIODE	1	
D700		MA151WA	DIODE	1	
D701,02		1SS101	DIODE	2	
D703		MA151K	DIODE	1	
D704-06		MA153	DIODE	3	
D707-09		LN25RP	LED	3	
D710		MA153	DIODE	1	
D711,12		MA1039	DIODE	2	
D713		MA153	DIODE	1	
D714,15		MA1039	DIODE	2	

Refer to the P.C.BOARDS LIST, page 6-1-1, before using this page.

Ref.No.		Part No.	Part Name & Description	Pcs	Remarks
D716-21		MA153	DIODE	6	
IC1		LM2904M	IC	1	
IC1		MC74HC02AF	IC	1	
IC2		LM2903M	IC	1	
IC2		MC74HC02AF	IC	1	
IC3		LM2904M	IC	1	
IC4		NJM4558M	IC	1	
IC5		MC14538BF	IC	1	
IC6		UPD65031F405	IC	1	
IC7		MN53015VZW	IC	1	
IC8		MC14049UBF	IC	1	
IC9		MC14013BF	IC	1	
IC10		MM74HC221AM	IC	1	
IC11		AN78L05	IC	1	
IC12		MC14021BF	IC	1	
IC13		MC14094BF	IC	1	
IC14		UPD4053BG	IC	1	
IC15		MC14049UBF	IC	1	
IC16		MC14050BF	IC	1	
IC18		MN51020VZZ	IC	1	
IC101		LM2904M	IC	1	
IC102		LM2903M	IC	1	
IC103		LM2904M	IC	1	
IC104		MC14538BF	IC	1	
IC105		AN79L09	IC	1	
IC106		AN78N09	IC	1	
IC107		DN74LS293S	IC	1	
IC108		MC74HC00AF	IC	1	
IC109		MN6064R	IC	1	
IC110		MN6168VIA	IC	1	
IC111		MC74HCU04F	IC	1	
IC112		MC14049UBF	IC	1	
IC113,14		LM2904M	IC	2	
IC115		LM2903M	IC	1	
IC116,17		LM2904M	IC	2	
IC118-20		MC14066BF	IC	3	
IC121		UPD4052BG	IC	1	
IC123		UPD4053BG	IC	1	
IC124		MN53030VYA	IC	1	
IC125		MN53007VYC	IC	1	
IC126		UPC4558G	IC	1	
IC128		NJM4558M	IC	1	
IC129		MC14538BF	IC	1	
IC130		MC14013BF	IC	1	
IC131		LM2904M	IC	1	
IC132		UPC4558G	IC	1	
IC133		MN4030BS	IC	1	
IC134		MC14538BF	IC	1	
IC135		UPD4053BG	IC	1	
IC137		MC14538BF	IC	1	
IC301		AN78L05	IC	1	
IC302		LM2904M	IC	1	
IC303		LM2902M	IC	1	
IC304		UPD4053BG	IC	1	
IC305		MC14066BF	IC	1	
IC306		LM2904M	IC	1	
IC307		LM2902M	IC	1	
IC308,09		LM2904M	IC	2	
IC310-13		MC14066BF	IC	4	
IC314		MC14028BF	IC	1	
IC315		MC14081BF	IC	1	
IC316		NJM2901M	IC	1	
IC317,18		MC14538BF	IC	2	
IC319		MC14049UBF	IC	1	
IC501		BA6149LS	IC	1	
IC502		PU4213	IC	1	
IC503-06		AN3821K	IC	4	
IC700		AN608P	IC	1	
IC701		UPC4741G	IC	1	
IC702		TL431CLP	IC	1	#IC
IC703		UPD4053BG	IC	1	
IC704		UPC4558G	IC	1	

Ref.No.		Part No.	Part Name & Description	Pcs	Remarks
IC705		UPC4082G	IC	1	
IC706		MC74HC157AF	IC	1	
IC707		MN18882	IC	1	
IC708		VSI0623	IC	1	#IC
IC709		M51951BML	IC	1	
IC710		MC14538BF	IC	1	
IC711		MSM5210RS	IC	1	
IC712		UPD65024F137	IC	1	#IC
IC713		UPC4082G	IC	1	
IC714		UPC4558G	IC	1	
IC715		MC14051BF	IC	1	
IC716		UPC4082G	IC	1	
IC717		UPC4741G	IC	1	
IC718		UPC4558G	IC	1	
IC719		MC14051BF	IC	1	
IC720		UPD4053BG	IC	1	
IC721		AN79L05	IC	1	
IC722		AN78L05	IC	1	
IC723		AN78L09	IC	1	
IC724		AN79L09	IC	1	
IC725,26		LM2902M	IC	2	
IC727		LM2903M	IC	1	
IC800		LM2904M	IC	1	
ICS708		VJS2336A028	CONNECTOR (FEMALE)	1	
L1		VLP0017	COIL	1	
L2-L4		VLQEL05S221J	COIL 220UH	3	
L101,02		VLQEL05S221J	COIL 220UH	2	
L501		VLQ0214	COIL 50UH	1	
L504-07		VLQ0129	COIL 300UH	4	
L701		VLQEL05S101J	COIL 100UH	1	
L702		VLQ0128	COIL 47UH	1	
Q1		UN2213	TRANSISTOR-RESISTOR	1	
Q1,Q2		UN2213	TRANSISTOR-RESISTOR	2	
Q2		UN2213	TRANSISTOR-RESISTOR	1	
Q8,Q9		UN2213	TRANSISTOR-RESISTOR	2	
Q10,11		UN2213	TRANSISTOR-RESISTOR	2	
Q17		UN2213	TRANSISTOR-RESISTOR	1	
Q101		2SD601	TRANSISTOR CHIP	1	(Q,R)
Q102		UN2213	TRANSISTOR-RESISTOR	1	
Q103		2SJ43	TRANSISTOR	1	
Q104		UN2213	TRANSISTOR-RESISTOR	1	
Q105		2SD601	TRANSISTOR CHIP	1	(Q,R)
Q106-08		UN2213	TRANSISTOR-RESISTOR	3	
Q109		2SD601	TRANSISTOR CHIP	1	(Q,R)
Q110-19		UN2213	TRANSISTOR-RESISTOR	10	
Q120		2SD601	TRANSISTOR CHIP	1	(Q,R)
Q123,24		UN2213	TRANSISTOR-RESISTOR	2	
Q128		UN2213	TRANSISTOR-RESISTOR	1	
Q129		UN2214	TRANSISTOR-RESISTOR	1	
Q130		2SK374	TRANSISTOR	1	
Q131-33		UN2213	TRANSISTOR-RESISTOR	3	
Q134,35		2SB709	TRANSISTOR CHIP	2	(Q,R)
Q137-39		UN2213	TRANSISTOR-RESISTOR	3	
Q140		MA151A	DIODE	1	
Q301,02		UN2213	TRANSISTOR-RESISTOR	2	
Q303		UN2113	TRANSISTOR-RESISTOR	1	
Q304		UN2213	TRANSISTOR-RESISTOR	1	
Q305		UN2113	TRANSISTOR-RESISTOR	1	
Q306-09		UN2213	TRANSISTOR-RESISTOR	4	
Q312-14		UN2213	TRANSISTOR-RESISTOR	3	
Q316		2SD601	TRANSISTOR CHIP	1	(Q,R)
Q317		UN2213	TRANSISTOR-RESISTOR	1	
Q319		2SD601	TRANSISTOR CHIP	1	(Q,R)
Q320		UN2213	TRANSISTOR-RESISTOR	1	
Q326		UN2213	TRANSISTOR-RESISTOR	1	
Q330-33		UN2213	TRANSISTOR-RESISTOR	4	
Q336,37		UN2213	TRANSISTOR-RESISTOR	2	
Q339,40		UN2213	TRANSISTOR-RESISTOR	2	
Q343		UN2213	TRANSISTOR-RESISTOR	1	

Refer to the P.C.BOARDS LIST, page 6-1-1, before using this page.

Ref.No.		Part No.	Part Name & Description	Pcs	Remarks
Q501-04		2SB709	TRANSISTOR CHIP	4	(Q,R)
Q505		UN2113	TRANSISTOR-RESISTOR	1	
Q506		UN2213	TRANSISTOR-RESISTOR	1	
Q507		UN2113	TRANSISTOR-RESISTOR	1	
Q508,09		UN2213	TRANSISTOR-RESISTOR	2	
Q700		UN2113	TRANSISTOR-RESISTOR	1	
Q701-11		UN2213	TRANSISTOR-RESISTOR	11	
			RESISTORS		
R1		ERJ6GEYJ103	M.RESISTOR CH 1/10W 10K	1	
R1		ERJ6GEYJ472	M.RESISTOR CH 1/10W 4.7K	1	
R2		ERJ6GEYJ562	M.RESISTOR CH 1/10W 5.6K	1	
R2		ERJ6GEYJ683	M.RESISTOR CH 1/10W 68K	1	
R3		ERJ6GEYJ103	M.RESISTOR CH 1/10W 10K	1	
R3		ERJ6GEYJ562	M.RESISTOR CH 1/10W 5.6K	1	
R4		ERJ6GEYJ105	M.RESISTOR CH 1/10W 1M	1	
R4		ERJ6GEYJ105	M.RESISTOR CH 1/10W 1M	1	
R5		ERJ6GEYJ103	M.RESISTOR CH 1/10W 10K	1	
R5		ERJ6GEYJ105	M.RESISTOR CH 1/10W 1M	1	
R6		ERJ6GEYJ103	M.RESISTOR CH 1/10W 10K	1	
R6		ERJ6GEYJ562	M.RESISTOR CH 1/10W 5.6K	1	
R7		ERJ6GEYJ155	M.RESISTOR CH1/10W 1.5M	1	
R7		ERJ6GEYJ562	M.RESISTOR CH 1/10W 5.6K	1	
R8		ERJ6GEYJ103	M.RESISTOR CH 1/10W 10K	1	
R9		ERJ6GEYJ125	M.RESISTOR CH1/10W 1.2M	1	
R10		ERJ6GEYJ563	M.RESISTOR CH 1/10W 56K	1	
R10		ERJ6GEYJ823	M.RESISTOR CH 1/10W 82K	1	
R11,12		VREO034E102	M.RESISTOR CH 1/10W 1K	2	
R13		ERJ6GEYJ123	M.RESISTOR CH1/10W 12K	1	
R14		ERJ6GEYJ823	M.RESISTOR CH 1/10W 82K	1	
R15		ERJ6GEYJ393	M.RESISTOR CH 1/10W 39K	1	
R16		ERJ6GEYJ564	M.RESISTOR CH 1/10W 560K	1	
R17		ERJ6GEYJ822	M.RESISTOR CH 1/10W 8.2K	1	
R18,19		ERJ6GEYJ183	M.RESISTOR CH 1/10W 18K	2	
R20		ERJ6GEYJ822	M.RESISTOR CH 1/10W 8.2K	1	
R21		ERJ6GEYJ104	M.RESISTOR CH 1/10W 100K	1	
R22		ERJ6GEYJ472	M.RESISTOR CH 1/10W 4.7K	1	
R23		ERJ6GEYJ103	M.RESISTOR CH 1/10W 10K	1	
R24		ERJ6GEYJ563	M.RESISTOR CH 1/10W 56K	1	
R25		ERJ6GEYJ102	M.RESISTOR CH 1/10W 1K	1	
R27		ERJ6GEYJ103	M.RESISTOR CH 1/10W 10K	1	
R28-31		ERJ6GEYJ563	M.RESISTOR CH 1/10W 56K	4	
R34,35		ERJ6GEYJ103	M.RESISTOR CH 1/10W 10K	2	
R36		ERJ6GEYJ562	M.RESISTOR CH 1/10W 5.6K	1	
R37-44		ERJ6GEYJ563	M.RESISTOR CH 1/10W 56K	8	
R45		ERJ6GEYJ104	M.RESISTOR CH 1/10W 100K	1	
R50		ERJ6GEYJ563	M.RESISTOR CH 1/10W 56K	1	
R51		ERJ6GEYJ103	M.RESISTOR CH 1/10W 10K	1	
R52		ERJ6GEYJ474	M.RESISTOR CH 1/10W 470K	1	
R53		ERJ6GEYJ563	M.RESISTOR CH 1/10W 56K	1	
R54		ERJ6GEYJ103	M.RESISTOR CH 1/10W 10K	1	
R55		ERJ6GEYJ474	M.RESISTOR CH 1/10W 470K	1	
R56		ERJ6GEYJ563	M.RESISTOR CH 1/10W 56K	1	
R57		ERJ6GEYJ103	M.RESISTOR CH 1/10W 10K	1	
R58		ERJ6GEYJ474	M.RESISTOR CH 1/10W 470K	1	
R59		ERJ6GEYJ103	M.RESISTOR CH 1/10W 10K	1	
R60		ERJ6GEYJ102	M.RESISTOR CH 1/10W 1K	1	
R61		ERJ6GEYJ223	M.RESISTOR CH 1/10W 22K	1	
R62		ERJ6GEYJ103	M.RESISTOR CH 1/10W 10K	1	
R69,70		ERJ6GEYJ102	M.RESISTOR CH 1/10W 1K	2	
R101		ERJ6GEYJ103	M.RESISTOR CH 1/10W 10K	1	
R102		ERJ6GEYJ184	M.RESISTOR CH1/10W 180K	1	
R103		ERJ6GEYJ102	M.RESISTOR CH 1/10W 1K	1	
R104		ERJ6GEYJ474	M.RESISTOR CH 1/10W 470K	1	
R105-07		ERJ6GEYJ103	M.RESISTOR CH 1/10W 10K	3	
R108		ERJ6GEYJ184	M.RESISTOR CH1/10W 180K	1	
R109		ERJ6GEYJ102	M.RESISTOR CH 1/10W 1K	1	
R110,11		ERJ6GEYJ474	M.RESISTOR CH 1/10W 470K	2	
R112		ERJ6GEYJ153	M.RESISTOR CH 1/10W 15K	1	
R113		ERJ6GEYJ562	M.RESISTOR CH 1/10W 5.6K	1	
R114		ERJ6GEYJ224	M.RESISTOR CH 1/10W 220K	1	
R115		ERJ6GEYJ682	M.RESISTOR CH 1/10W 6.8K	1	
R116		ERJ6GEYJ153	M.RESISTOR CH 1/10W 15K	1	

Ref.No.		Part No.	Part Name & Description	Pcs	Remarks
R117		ERJ6GEYJ104	M.RESISTOR CH 1/10W 100K	1	
R118		ERJ6GEYJ103	M.RESISTOR CH 1/10W 10K	1	
R119		ERJ6GEYJ153	M.RESISTOR CH 1/10W 15K	1	
R120		ERJ6GEYJ152	M.RESISTOR CH 1/10W 1.5K	1	
R121,22		ERJ6GEYJ103	M.RESISTOR CH 1/10W 10K	2	
R123		ERJ6GEYJ105	M.RESISTOR CH 1/10W 1M	1	
R124		ERJ6GEYJ272	M.RESISTOR CH 1/10W 2.7K	1	
R125		ERJ6GEYJ103	M.RESISTOR CH 1/10W 10K	1	
R126-32		ERJ6GEYJ563	M.RESISTOR CH 1/10W 56K	7	
R133,34		ERJ6GEYJ103	M.RESISTOR CH 1/10W 10K	2	
R135,36		ERJ6GEYJ563	M.RESISTOR CH 1/10W 56K	2	
R137		ERJ6GEYJ103	M.RESISTOR CH 1/10W 10K	1	
R138		ERJ6GEYJ563	M.RESISTOR CH 1/10W 56K	1	
R139		ERJ6GEYJ224	M.RESISTOR CH 1/10W 220K	1	
R140		ERJ6GEYJ563	M.RESISTOR CH 1/10W 56K	1	
R141		ERJ6GEYJ224	M.RESISTOR CH 1/10W 220K	1	
R142		ERJ6GEYJ563	M.RESISTOR CH 1/10W 56K	1	
R143		ERJ6GEYJ223	M.RESISTOR CH 1/10W 22K	1	
R144		ERJ6GEYJ103	M.RESISTOR CH 1/10W 10K	1	
R145		ERJ6GEYJ563	M.RESISTOR CH 1/10W 56K	1	
R146		ERJ6GEYJ562	M.RESISTOR CH 1/10W 5.6K	1	
R147,48		ERJ6GEYJ273	M.RESISTOR CH1/10W 27K	2	
R150		ERJ6GEYJ183	M.RESISTOR CH 1/10W 18K	1	
R151		ERJ6GEYJ103	M.RESISTOR CH 1/10W 10K	1	
R152		ERJ6GEYJ824	M.RESISTOR CH 1/10W 820K	1	
R153		ERJ6GEYJ562	M.RESISTOR CH 1/10W 5.6K	1	
R154-56		ERJ6GEYJ393	M.RESISTOR CH 1/10W 39K	3	
R157		ERJ6GEYJ103	M.RESISTOR CH 1/10W 10K	1	
R158		ERJ6GEYJ183	M.RESISTOR CH 1/10W 18K	1	
R159		ERJ6GEYJ682	M.RESISTOR CH 1/10W 6.8K	1	
R160		ERJ6GEYJ183	M.RESISTOR CH 1/10W 18K	1	
R161		ERJ6GEYJ103	M.RESISTOR CH 1/10W 10K	1	
R162		ERJ6GEYJ563	M.RESISTOR CH 1/10W 56K	1	
R163		ERJ6GEYJ103	M.RESISTOR CH 1/10W 10K	1	
R164		ERJ6GEYJ562	M.RESISTOR CH 1/10W 5.6K	1	
R165		ERJ6GEYJ333	M.RESISTOR CH 1/10W 33K	1	
R166		ERJ6GEYJ222	M.RESISTOR CH 1/10W 2.2K	1	
R167		ERJ6GEYJ183	M.RESISTOR CH 1/10W 18K	1	
R168		ERJ6GEYJ273	M.RESISTOR CH1/10W 27K	1	
R169		ERJ6GEYJ103	M.RESISTOR CH 1/10W 10K	1	
R170,71		ERJ6GEYJ563	M.RESISTOR CH 1/10W 56K	2	
R172		ERJ6GEYJ102	M.RESISTOR CH 1/10W 1K	1	
R181,82		ERJ6GEYJ563	M.RESISTOR CH 1/10W 56K	2	
R183		ERJ6GEYJ102	M.RESISTOR CH 1/10W 1K	1	
R184		ERJ6GEYJ563	M.RESISTOR CH 1/10W 56K	1	
R185		ERJ6GEYJ104	M.RESISTOR CH 1/10W 100K	1	
R186		ERJ6GEYJ102	M.RESISTOR CH 1/10W 1K	1	
R187,88		ERJ6GEYJ822	M.RESISTOR CH 1/10W 8.2K	2	
R189		ERJ6GEYJ561	M.RESISTOR CH 1/10W 560	1	
R190		ERJ6GEYJ472	M.RESISTOR CH 1/10W 4.7K	1	
R191,92		ERJ6GEYJ563	M.RESISTOR CH 1/10W 56K	2	
R193,94		ERJ6GEYJ273	M.RESISTOR CH1/10W 27K	2	
R195		ERJ6GEYJ562	M.RESISTOR CH 1/10W 5.6K	1	
R196		ERJ6GEYJ153	M.RESISTOR CH 1/10W 15K	1	
R197		ERJ6GEYJ332	M.RESISTOR CH 1/10W 3.3K	1	
R204		ERJ6GEYJ562	M.RESISTOR CH 1/10W 5.6K	1	
R205		ERJ6GEYJ101	M.RESISTOR CH 1/10W 100	1	
R206		ERJ6GEYJ104	M.RESISTOR CH 1/10W 100K	1	
R207-09		ERJ6GEYJ102	M.RESISTOR CH 1/10W 1K	3	
R210		ERJ6GEYJ153	M.RESISTOR CH 1/10W 15K	1	
R211		ERJ6GEYJ183	M.RESISTOR CH 1/10W 18K	1	
R212		ERJ6GEYJ683	M.RESISTOR CH 1/10W 68K	1	
R213-15		ERJ6GEYJ563	M.RESISTOR CH 1/10W 56K	3	
R216		ERJ6GEYJ105	M.RESISTOR CH 1/10W 1M	1	
R222-27		ERJ6GEYJ563	M.RESISTOR CH 1/10W 56K	6	
R228		ERJ6GEYJ104	M.RESISTOR CH 1/10W 100K	1	
R229		ERJ6GEYJ223	M.RESISTOR CH 1/10W 22K	1	
R230		ERJ6GEYJ563	M.RESISTOR CH 1/10W 56K	1	
R231		ERJ6GEYJ104	M.RESISTOR CH 1/10W 100K	1	
R232		VREO034E272	M.RESISTOR CH 1/10W 2.7K	1	
R233		VREO034E104	M.RESISTOR CH 1/10W 100K	1	
R234		VREO034E272	M.RESISTOR CH 1/10W 2.7K	1	
R235		VREO034E104	M.RESISTOR CH 1/10W 100K	1	
R236		ERJ6GEYJ563	M.RESISTOR CH 1/10W 56K	1	
R237		ERJ6GEYJ824	M.RESISTOR CH 1/10W 820K	1	

Refer to the P.C.BOARDS LIST, page 6-1-1, before using this page.

Ref.No.		Part No.	Part Name & Description	Pcs	Remarks
R238		ERJ6GEYJ102	M.RESISTOR CH 1/10W 1K	1	
R239		ERJ6GEYJ103	M.RESISTOR CH 1/10W 10K	1	
R240		ERJ6GEYJ222	M.RESISTOR CH 1/10W 2.2K	1	
R241		ERJ6GEYJ104	M.RESISTOR CH 1/10W 100K	1	
R242		ERJ6GEYJ334	M.RESISTOR CH 1/10W 330K	1	
R243		ERJ6GEYJ101	M.RESISTOR CH 1/10W 100	1	
R244,45		ERJ6GEYJ103	M.RESISTOR CH 1/10W 10K	2	
R246		ERJ6GEYJ102	M.RESISTOR CH 1/10W 1K	1	
R247		ERJ6GEYJ103	M.RESISTOR CH 1/10W 10K	1	
R248		ERJ6GEYJ562	M.RESISTOR CH 1/10W 5.6K	1	
R249		ERJ6GEYJ392	M.RESISTOR CH 1/10W 3.9K	1	
R250		ERJ6GEYJ184	M.RESISTOR CH1/10W 180K	1	
R251		ERJ6GEYJ224	M.RESISTOR CH 1/10W 220K	1	
R252		ERJ6GEYJ153	M.RESISTOR CH 1/10W 15K	1	
R253		ERJ6GEYJ474	M.RESISTOR CH 1/10W 470K	1	
R254-58		ERJ6GEYJ103	M.RESISTOR CH 1/10W 10K	5	
R259		ERJ6GEYJ223	M.RESISTOR CH 1/10W 22K	1	
R260		ERJ6GEYJ393	M.RESISTOR CH 1/10W 39K	1	
R261		ERJ6GEYJ823	M.RESISTOR CH 1/10W 82K	1	
R262		ERJ6GEYJ123	M.RESISTOR CH1/10W 12K	1	
R263		ERJ6GEYJ183	M.RESISTOR CH 1/10W 18K	1	
R264		ERJ6GEYJ333	M.RESISTOR CH 1/10W 33K	1	
R265		ERJ6GEYJ683	M.RESISTOR CH 1/10W 68K	1	
R266-69		ERJ6GEYJ563	M.RESISTOR CH 1/10W 56K	4	
R270		ERJ6GEYJ562	M.RESISTOR CH 1/10W 5.6K	1	
R271		ERJ6GEYJ103	M.RESISTOR CH 1/10W 10K	1	
R273		ERJ6GEYJ393	M.RESISTOR CH 1/10W 39K	1	
R274		ERJ6GEYJ103	M.RESISTOR CH 1/10W 10K	1	
R275		ERJ6GEYJ563	M.RESISTOR CH 1/10W 56K	1	
R276,77		VREO034E102	M.RESISTOR CH 1/10W 1K	2	
R278		ERJ6GEYJ103	M.RESISTOR CH 1/10W 10K	1	
R279-82		ERJ6GEYJ563	M.RESISTOR CH 1/10W 56K	4	
R283		ERJ6GEYJ103	M.RESISTOR CH 1/10W 10K	1	
R284		ERJ6GEYJ272	M.RESISTOR CH 1/10W 2.7K	1	
R285		ERJ6GEYJ122	M.RESISTOR CH1/10W 1.2K	1	
R286		ERJ6GEYJ472	M.RESISTOR CH 1/10W 4.7K	1	
R301		ERJ6GEYJ563	M.RESISTOR CH 1/10W 56K	1	
R302,03		ERJ6GEYJ103	M.RESISTOR CH 1/10W 10K	2	
R304		ERJ6GEYJ563	M.RESISTOR CH 1/10W 56K	1	
R305		ERJ6GEYJ104	M.RESISTOR CH 1/10W 100K	1	
R306		ERJ6GEYJ683	M.RESISTOR CH 1/10W 68K	1	
R307		ERJ6GEYJ223	M.RESISTOR CH 1/10W 22K	1	
R308		ERJ6GEYJ103	M.RESISTOR CH 1/10W 10K	1	
R309		ERJ6GEYJ472	M.RESISTOR CH 1/10W 4.7K	1	
R310		ERJ6GEYJ822	M.RESISTOR CH 1/10W 8.2K	1	
R311		ERJ6GEYJ392	M.RESISTOR CH 1/10W 3.9K	1	
R312		ERJ6GEYJ153	M.RESISTOR CH 1/10W 15K	1	
R313		ERJ6GEYJ332	M.RESISTOR CH 1/10W 3.3K	1	
R314		ERJ6GEYJ151	M.RESISTOR CH 1/10W 150	1	
R315,16		ERJ6GEYJ103	M.RESISTOR CH 1/10W 10K	2	
R317		ERJ6GEYJ683	M.RESISTOR CH 1/10W 68K	1	
R318		ERJ6GEYJ103	M.RESISTOR CH 1/10W 10K	1	
R319		ERJ6GEYJ273	M.RESISTOR CH1/10W 27K	1	
R320		ERJ6GEYJ104	M.RESISTOR CH 1/10W 100K	1	
R321		ERJ6GEYJ223	M.RESISTOR CH 1/10W 22K	1	
R322		ERJ6GEYJ124	M.RESISTOR CH 1/10W 120K	1	
R325,26		VREO034E332	M.RESISTOR CH 1/10W 3.3K	2	
R327		ERJ6GEYJ223	M.RESISTOR CH 1/10W 22K	1	
R328		ERJ6GEYJ104	M.RESISTOR CH 1/10W 100K	1	
R329		ERJ6GEYJ393	M.RESISTOR CH 1/10W 39K	1	
R330		ERJ6GEYJ334	M.RESISTOR CH 1/10W 330K	1	
R331		ERJ6GEYJ474	M.RESISTOR CH 1/10W 470K	1	
R332,33		ERJ6GEYJ104	M.RESISTOR CH 1/10W 100K	2	
R334		ERJ6GEYJ105	M.RESISTOR CH 1/10W 1M	1	
R335		ERJ6GEYJ684	M.RESISTOR CH 1/10W 680K	1	
R336		ERJ6GEYJ473	M.RESISTOR CH 1/10W 47K	1	
R337,38		ERJ6GEYJ103	M.RESISTOR CH 1/10W 10K	2	
R339,40		VREO034E332	M.RESISTOR CH 1/10W 3.3K	2	
R341		ERJ6GEYJ223	M.RESISTOR CH 1/10W 22K	1	
R342		ERJ6GEYJ104	M.RESISTOR CH 1/10W 100K	1	
R343		ERJ6GEYJ473	M.RESISTOR CH 1/10W 47K	1	
R344		ERJ6GEYJ334	M.RESISTOR CH 1/10W 330K	1	
R345		ERJ6GEYJ474	M.RESISTOR CH 1/10W 470K	1	
R346		ERJ6GEYJ104	M.RESISTOR CH 1/10W 100K	1	
R347		ERJ6GEYJ105	M.RESISTOR CH 1/10W 1M	1	

Ref.No.		Part No.	Part Name & Description	Pcs	Remarks
R348		ERJ6GEYJ684	M.RESISTOR CH 1/10W 680K	1	
R349,50		ERJ6GEYJ103	M.RESISTOR CH 1/10W 10K	2	
R351		ERJ6GEYJ472	M.RESISTOR CH 1/10W 4.7K	1	
R352-55		ERJ6GEYJ103	M.RESISTOR CH 1/10W 10K	4	
R356		ERJ6GEYJ222	M.RESISTOR CH 1/10W 2.2K	1	
R357		ERJ6GEYJ223	M.RESISTOR CH 1/10W 22K	1	
R358		ERJ6GEYJ104	M.RESISTOR CH 1/10W 100K	1	
R359-63		ERJ6GEYJ103	M.RESISTOR CH 1/10W 10K	5	
R365		ERJ6GEYJ104	M.RESISTOR CH 1/10W 100K	1	
R366		ERJ6GEYJ103	M.RESISTOR CH 1/10W 10K	1	
R367,68		ERJ6GEYJ563	M.RESISTOR CH 1/10W 56K	2	
R369		ERJ6GEYJ104	M.RESISTOR CH 1/10W 100K	1	
R370-74		ERJ6GEYJ103	M.RESISTOR CH 1/10W 10K	5	
R376		ERJ6GEYJ104	M.RESISTOR CH 1/10W 100K	1	
R378,79		ERJ6GEYJ563	M.RESISTOR CH 1/10W 56K	2	
R380		ERJ6GEYJ103	M.RESISTOR CH 1/10W 10K	1	
R381		ERJ6GEYJ473	M.RESISTOR CH 1/10W 47K	1	
R382		ERJ6GEYJ683	M.RESISTOR CH 1/10W 68K	1	
R383		ERJ6GEYJ152	M.RESISTOR CH 1/10W 1.5K	1	
R386		ERJ6GEYJ182	M.RESISTOR CH 1/10W 1.8K	1	
R388		ERJ6GEYJ223	M.RESISTOR CH 1/10W 22K	1	
R389		ERJ6GEYJ153	M.RESISTOR CH 1/10W 15K	1	
R390		ERJ6GEYJ223	M.RESISTOR CH 1/10W 22K	1	
R391		ERJ6GEYJ153	M.RESISTOR CH 1/10W 15K	1	
R392,93		ERJ6GEYJ103	M.RESISTOR CH 1/10W 10K	2	
R394,95		VREO034E102	M.RESISTOR CH 1/10W 1K	2	
R396,97		VREO034E472	M.RESISTOR CH 1/10W 4.7K	2	
R398		ERJ6GEYJ334	M.RESISTOR CH 1/10W 330K	1	
R399		ERJ6GEYJ333	M.RESISTOR CH 1/10W 33K	1	
R405		ERJ6GEYJ333	M.RESISTOR CH 1/10W 33K	1	
R406		ERJ6GEYJ103	M.RESISTOR CH 1/10W 10K	1	
R407		ERJ6GEYJ333	M.RESISTOR CH 1/10W 33K	1	
R408,09		ERJ6GEYJ103	M.RESISTOR CH 1/10W 10K	2	
R410		ERJ6GEYJ183	M.RESISTOR CH 1/10W 18K	1	
R421		ERJ6GEYJ221	M.RESISTOR CH 1/10W 220	1	
R423		ERJ6GEYJ221	M.RESISTOR CH 1/10W 220	1	
R424		ERJ6GEYJ222	M.RESISTOR CH 1/10W 2.2K	1	
R425		ERJ6GEYJ563	M.RESISTOR CH 1/10W 56K	1	
R427		ERJ6GEYJ333	M.RESISTOR CH 1/10W 33K	1	
R428		ERJ6GEYJ223	M.RESISTOR CH 1/10W 22K	1	
R431		ERJ6GEYJ563	M.RESISTOR CH 1/10W 56K	1	
R432,33		ERJ6GEYJ393	M.RESISTOR CH 1/10W 39K	2	
R434		ERJ6GEYJ331	M.RESISTOR CH 1/10W 330	1	
R435		ERJ6GEYJ103	M.RESISTOR CH 1/10W 10K	1	
R437		ERJ6GEYJ684	M.RESISTOR CH 1/10W 680K	1	
R440		ERJ6GEYJ562	M.RESISTOR CH 1/10W 5.6K	1	
R441,42		ERJ6GEYJ105	M.RESISTOR CH 1/10W 1M	2	
R443		ERJ6GEYJ223	M.RESISTOR CH 1/10W 22K	1	
R463		ERDS2TJ331	C.RESISTOR 1/4W 330	1	
R469		ERDS2TJ564	C.RESISTOR 1/4W 560K	1	
R470		ERDS2TJ394	C.RESISTOR 1/4W 390K	1	
R501		ERJ6GEYJ102	M.RESISTOR CH 1/10W 1K	1	
R502		ERJ6GEYJ103	M.RESISTOR CH 1/10W 10K	1	
R503		ERJ6GEYJ102	M.RESISTOR CH 1/10W 1K	1	
R504-07		ERJ6GEYJ821	M.RESISTOR CH 1/10W 820	4	
R508		ERJ6GEYJ473	M.RESISTOR CH 1/10W 47K	1	
R509-12		ERJ6GEYJ391	M.RESISTOR CH 1/10W 390	4	
R513		ERJ6GEYJ103	M.RESISTOR CH 1/10W 10K	1	
R514		ERJ6GEYJ224	M.RESISTOR CH 1/10W 220K	1	
R515		ERJ6GEYJ273	M.RESISTOR CH1/10W 27K	1	
R516		ERJ6GEYJ103	M.RESISTOR CH 1/10W 10K	1	
R517		ERJ6GEYJ272	M.RESISTOR CH 1/10W 2.7K	1	
R518		ERJ6GEYJ104	M.RESISTOR CH 1/10W 100K	1	
R519		ERJ6GEYJ392	M.RESISTOR CH 1/10W 3.9K	1	
R520		ERJ6GEYJ333	M.RESISTOR CH 1/10W 33K	1	
R521,22		ERJ6GEYJ224	M.RESISTOR CH 1/10W 220K	2	
R523		ERX12SJR47	M.RESISTOR 1/2W 0.47	1	
R524		ERJ6GEYJ273	M.RESISTOR CH1/10W 27K	1	
R525		ERJ6GEYJ272	M.RESISTOR CH 1/10W 2.7K	1	
R526		ERJ6GEYJ103	M.RESISTOR CH 1/10W 10K	1	
R527		ERJ6GEYJ104	M.RESISTOR CH 1/10W 100K	1	
R528		ERJ6GEYJ224	M.RESISTOR CH 1/10W 220K	1	
R529		ERJ6GEYJ392	M.RESISTOR CH 1/10W 3.9K	1	
R530		ERJ6GEYJ223	M.RESISTOR CH 1/10W 22K	1	
R531		ERJ6GEYJ224	M.RESISTOR CH 1/10W 220K	1	

Refer to the P.C.BOARDS LIST, page 6-1-1, before using this page.

Ref.No.		Part No.	Part Name & Description	Pcs	Remarks
R532		ERX12SJR68	M.RESISTOR 1/2W 0.68	1	
R533		ERJ6GEYJ224	M.RESISTOR CH 1/10W 220K	1	
R534		ERJ6GEYJ273	M.RESISTOR CH1/10W 27K	1	
R535		ERJ6GEYJ103	M.RESISTOR CH 1/10W 10K	1	
R536		ERJ6GEYJ104	M.RESISTOR CH 1/10W 100K	1	
R537		ERX12SJR47	M.RESISTOR 1/2W 0.47	1	
R538-40		ERJ6GEYJ224	M.RESISTOR CH 1/10W 220K	3	
R541		ERJ6GEYJ272	M.RESISTOR CH 1/10W 2.7K	1	
R542		ERJ6GEYJ223	M.RESISTOR CH 1/10W 22K	1	
R543		ERJ6GEYJ273	M.RESISTOR CH1/10W 27K	1	
R544		ERJ6GEYJ104	M.RESISTOR CH 1/10W 100K	1	
R545		ERJ6GEYJ103	M.RESISTOR CH 1/10W 10K	1	
R546		ERX12SJR47	M.RESISTOR 1/2W 0.47	1	
R547-49		ERJ6GEYJ224	M.RESISTOR CH 1/10W 220K	3	
R550		ERJ6GEYJ272	M.RESISTOR CH 1/10W 2.7K	1	
R551		ERJ6GEYJ223	M.RESISTOR CH 1/10W 22K	1	
R552		ERX1ANJ6R8	M.RESISTOR 1W 6.8	1	
R554		ERJ6GEYJ272	M.RESISTOR CH 1/10W 2.7K	1	
R700		ERJ6GEYJ103	M.RESISTOR CH 1/10W 10K	1	
R701		ERJ6GEYJ473	M.RESISTOR CH 1/10W 47K	1	
R702		ERJ6GEYJ103	M.RESISTOR CH 1/10W 10K	1	
R703		ERJ6GEYJ473	M.RESISTOR CH 1/10W 47K	1	
R704		ERJ6GEYJ103	M.RESISTOR CH 1/10W 10K	1	
R705		ERJ6GEYJ183	M.RESISTOR CH 1/10W 18K	1	
R706		ERJ6GEYJ473	M.RESISTOR CH 1/10W 47K	1	
R707		ERJ6GEYJ474	M.RESISTOR CH 1/10W 470K	1	
R708		ERJ6GEYJ331	M.RESISTOR CH 1/10W 330	1	
R709		ERJ6GEYJ102	M.RESISTOR CH 1/10W 1K	1	
R710		ERJ6GEYJ392	M.RESISTOR CH 1/10W 3.9K	1	
R711		ERJ6GEYJ393	M.RESISTOR CH 1/10W 39K	1	
R712		ERJ6GEYJ102	M.RESISTOR CH 1/10W 1K	1	
R713,14		ERJ6GEYG332	M.RESISTOR CH 1/10W 3.3K	2	
R715		ERJ6GEYG222	M.RESISTOR CH 1/10W 2.2K	1	
R716,17		ERJ6GEYJ332	M.RESISTOR CH 1/10W 3.3K	2	
R718		ERJ6GEYJ103	M.RESISTOR CH 1/10W 10K	1	
R719-26		ERJ6GEYG273	M.RESISTOR CH 1/10W 27K	8	
R727-40		ERJ6GEYJ473	M.RESISTOR CH 1/10W 47K	14	
R741		ERJ6GEYJ103	M.RESISTOR CH 1/10W 10K	1	
R742,43		ERJ6GEYJ473	M.RESISTOR CH 1/10W 47K	2	
R744		ERJ6GEYJ103	M.RESISTOR CH 1/10W 10K	1	
R746-50		ERJ6GEYJ103	M.RESISTOR CH 1/10W 10K	5	
R751		ERJ6GEYJ272	M.RESISTOR CH 1/10W 2.7K	1	
R752-54		ERJ6GEYJ561	M.RESISTOR CH 1/10W 560	3	
R755		ERJ6GEYJ223	M.RESISTOR CH 1/10W 22K	1	
R756-58		ERJ6GEYG273	M.RESISTOR CH 1/10W 27K	3	
R759		ERJ6GEYG683	M.RESISTOR CH 1/10W 68K	1	
R760		ERJ6GEYG822	M.RESISTOR CH1/10W 8.2K	1	
R761		ERJ6GEY0R00	M.RESISTOR CH 1/10W 0	1	
R762		ERJ6GEYG913	M.RESISTOR CH 1/10W 91K	1	
R763		ERJ6GEYJ334	M.RESISTOR CH 1/10W 330K	1	
R764		ERJ6GEYJ683	M.RESISTOR CH 1/10W 68K	1	
R765		ERJ6GEYJ334	M.RESISTOR CH 1/10W 330K	1	
R766,67		ERJ6GEYJ273	M.RESISTOR CH1/10W 27K	2	
R768		ERJ6GEYG182	M.RESISTOR CH 1/10W 1.8K	1	
R769		ERJ6GEYJ154	M.RESISTOR CH1/10W 150K	1	
R770		ERJ6GEYJ393	M.RESISTOR CH 1/10W 39K	1	
R771		ERJ6GEYG682	M.REISITOR CH 1/10W 6.8K	1	
R772-74		ERJ6GEYG273	M.RESISTOR CH 1/10W 27K	3	
R775		ERJ6GEYG683	M.RESISTOR CH 1/10W 68K	1	
R776		ERJ6GEYG822	M.RESISTOR CH1/10W 8.2K	1	
R777,78		ERJ6GEYG564	M.RESISTOR CH 1/10W 560K	2	
R779		ERJ6GEYJ683	M.RESISTOR CH 1/10W 68K	1	
R780,81		ERJ6GEYG333	M.RESISTOR CH1/10W 33K	2	
R782		ERJ6GEYJ564	M.RESISTOR CH 1/10W 560K	1	
R783		ERJ6GEY0R00	M.RESISTOR CH 1/10W 0	1	
R784		ERJ6GEYG913	M.RESISTOR CH 1/10W 91K	1	
R785		ERJ6GEYJ683	M.RESISTOR CH 1/10W 68K	1	
R786,87		ERJ6GEYJ334	M.RESISTOR CH 1/10W 330K	2	
R788,89		ERJ6GEYJ273	M.RESISTOR CH1/10W 27K	2	
R790		ERJ6GEYG182	M.RESISTOR CH 1/10W 1.8K	1	
R791		ERJ6GEYJ154	M.RESISTOR CH1/10W 150K	1	
R792		ERJ6GEYJ393	M.RESISTOR CH 1/10W 39K	1	
R793		ERJ6GEYG682	M.REISITOR CH 1/10W 6.8K	1	
R794,95		ERJ6GEYG273	M.RESISTOR CH 1/10W 27K	2	
R796		ERJ6GEYJ123	M.RESISTOR CH1/10W 12K	1	

Ref.No.		Part No.	Part Name & Description	Pcs	Remarks
R797,98		ERJ6GEYJ104	M.RESISTOR CH 1/10W 100K	2	
R799		ERJ6GEYJ683	M.RESISTOR CH 1/10W 68K	1	
R800		ERJ6GEYJ103	M.RESISTOR CH 1/10W 10K	1	
R801,02		VRE0034E103	M.RESISTOR CH 1/10W 10K	2	
R803		ERJ6GEYJ474	M.RESISTOR CH 1/10W 470K	1	
R804,05		ERJ6GEYJ224	M.RESISTOR CH 1/10W 220K	2	
R806		ERJ6GEYJ272	M.RESISTOR CH 1/10W 2.7K	1	
R807		ERJ6GEYJ224	M.RESISTOR CH 1/10W 220K	1	
R808		ERJ6GEYJ272	M.RESISTOR CH 1/10W 2.7K	1	
R809		ERJ6GEYJ103	M.RESISTOR CH 1/10W 10K	1	
R810,11		VRE0034E103	M.RESISTOR CH 1/10W 10K	2	
R812		ERJ6GEYJ474	M.RESISTOR CH 1/10W 470K	1	
R813,14		ERJ6GEYJ224	M.RESISTOR CH 1/10W 220K	2	
R815		ERJ6GEYJ272	M.RESISTOR CH 1/10W 2.7K	1	
R816		ERJ6GEYJ224	M.RESISTOR CH 1/10W 220K	1	
R817		ERJ6GEYJ272	M.RESISTOR CH 1/10W 2.7K	1	
RA700,01		VCR0202	RESISTOR ARRAY	2	
RA702		EXBLD8103G	COMBI.R-R 10K	1	
SW1,W2		VSR0032	VOLTAGE SELECT SWITCH	2	
SW700		VSS0207	SWITCH	1	
TP3-P7		VJR0582	PACK PIN	5	
TP13		VJR0582	PACK PIN	1	
TP15-17		VJR0582	PACK PIN	3	
TP19,20		VJR0582	PACK PIN	2	
TP102-05		VJR0582	PACK PIN	4	
TP108-18		VJR0582	PACK PIN	11	
TP201,02		VJR0582	PACK PIN	2	
TP302-04		VJR0582	PACK PIN	3	
TP306		VJR0582	PACK PIN	1	
TP309-12		VJR0582	PACK PIN	4	
TP700-14		VJR0582	PACK PIN	15	
TPG1-G3		VJR0582	PACK PIN	3	
VC101		ECV1ZW30X53	V.CAPACITOR 30P	1	
VR1		VRV0109B503	V.RESISTOR 50K	1	
VR3		VRV0109B503	V.RESISTOR 50K	1	
VR101		VRV0109B203	V.RESISTOR 20K	1	
VR102		VRV0109B103	V.RESISTOR 10K	1	
VR103		VRV0109B203	V.RESISTOR 20K	1	
VR104		VRV0109B502	V.RESISTOR 5K	1	
VR105		VRV0109B104	V.RESISTOR 100K	1	
VR301		VRV0109B502	V.RESISTOR 5K	1	
VR302,03		VRV0109B202	V.RESISTOR 2K	2	
VR304-07		VRV0109B503	V.RESISTOR 50K	4	
VR308		VRV0109B202	V.RESISTOR 2K	1	
VR700		VRV0109B202	V.RESISTOR 2K	1	
VR701		VRV0109B103	V.RESISTOR 10K	1	
VR702,03		VRV0110B503	V.RESISTOR 50K	2	
VR704-07		VRV0064B203	V.RESISTOR 20K	4	
VR708,09		VRV0109B102	V.RESISTOR 1K	2	
X101		VSX0081	CRYSTAL OSCILLATOR	1	
X501		VSX0136	CRYSTAL OSCILLATOR	1	
X700		VSX0149	CRYSTAL OSCILLATOR	1	
			MISCELLANEOUS		
		VJR0421	PIN	4	

Refer to the P.C.BOARDS LIST, page 6-1-1, before using this page.

Ref.No.		Part No.	Part Name & Description	Pcs	Remarks
		VML2143	CARD PULLER	1	
		VML2144	CARD PULLER	1	
		VMS4174	PIN	6	
		VMZ1091	BARRIER	1	
		VMZ1547	BARRIER	1	
		VSC2286	SHIELD CASE	1	
		VSC3056	SHIELD CASE	1	
		VXA3966	P.C.B. SHIELD PLATE	1	
		XNG26E	NUT	4	
		XYNV3+K6FR	SCREW	6	
		XYN26+C12	SCREW	4	

Refer to the P.C.BOARDS LIST, page 6-1-1, before using this page.

Ref.No.		Part No.	Part Name & Description	Pcs	Remarks
	■	VEP82061E	P.C.BOARD W/COMPONENT		FOR AU-65-E,B
			W5 SERVO		AU-62-E,B
			CAPACITORS		
C1		ECQM1H273JF	P.CAPACITOR 50V 0.027U	1	
C2		ECUM1H152JN	C.CAPACITOR CH 50V 1500P	1	
C3,C4		ECUM1H101JCN	C.CAPACITOR CH 50V 100P	2	
C5		ECEA1CU100	E.CAPACITOR 16V 10U	1	
C6		ECEAOJU101	E.CAPACITOR 6.3V 100U	1	
C7		ECEA1AU470	E.CAPACITOR 10V 47U	1	
C8		ECUM1H103ZFN	C.CAPACITOR CH 50V 0.01U	1	
C9		ECQM1H154JF	P.CAPACITOR 50V 0.15U	1	
C10		ECEA1HN2R2S	E.CAPACITOR 50V 2.2U	1	
C11		ECQM1H223JF	P.CAPACITOR 50V 0.022U	1	
C13		ECQP1H822JZ	P.CAPACITOR 50V 8200P	1	
C14		ECQM1H682JV	P.CAPACITOR 50V 6800P	1	
C15,16		ECUM1H103ZFN	C.CAPACITOR CH 50V 0.01U	2	
C17		ECQM1H394JV	P.CAPACITOR 50V 0.39U	1	
C18		ECEA1HU4R7	E.CAPACITOR 50V 4.7U	1	
C19		ECEA1AU470	E.CAPACITOR 10V 47U	1	
C20,21		ECUM1H103ZFN	C.CAPACITOR CH 50V 0.01U	2	
C22		ECEA1HU2R2	E.CAPACITOR 50V 2.2U	1	
C23,24		ECUM1E104ZFN	C.CAPACITOR CH 25V 0.1U	2	
C25		ECUM1H103ZFN	C.CAPACITOR CH 50V 0.01U	1	
C26		ECEA1AU470	E.CAPACITOR 10V 47U	1	
C27		ECUM1H103ZFN	C.CAPACITOR CH 50V 0.01U	1	
C28		ECEA1AU470	E.CAPACITOR 10V 47U	1	
C29		ECEA1AU330	E.CAPACITOR 10V 33U	1	
C30		ECUM1H103ZFN	C.CAPACITOR CH 50V 0.01U	1	
C31		ECEA1AU330	E.CAPACITOR 10V 33U	1	
C32		ECEA1AU470	E.CAPACITOR 10V 47U	1	
C33		ECUM1H103ZFN	C.CAPACITOR CH 50V 0.01U	1	
C34		ECEA1AU470	E.CAPACITOR 10V 47U	1	
C39		ECUM1H331JCN	C.CAPACITOR CH 50V 330P	1	
C40-42		ECUM1H103ZFN	C.CAPACITOR CH 50V 0.01U	3	
C43		ECUM1H101JCN	C.CAPACITOR CH 50V 100P	1	
C46		ECEA1CU470	E.CAPACITOR 16V 47U	1	
C47,48		ECUM1E104ZFN	C.CAPACITOR CH 25V 0.1U	2	
C101		ECQM1H104JF	P.CAPACITOR 50V 0.1U	1	
C102		ECUM1H151JCN	C.CAPACITOR CH 50V 150P	1	
C103		ECEA1CU470	E.CAPACITOR 16V 47U	1	
C104		ECEA1HU2R2	E.CAPACITOR 50V 2.2U	1	
C105		ECEA1CU101	E.CAPACITOR 16V 100U	1	
C106		ECQM1H104JF	P.CAPACITOR 50V 0.1U	1	
C107		ECUM1H151JCN	C.CAPACITOR CH 50V 150P	1	
C108		ECUM1H102JCN	C.CAPACITOR CH 50V 1000P	1	
C109		ECUM1H221JCN	C.CAPACITOR CH 50V 220P	1	
C110		ECQM1H103JF	P.CAPACITOR 50V 0.01U	1	
C111		ECEA1HU010	E.CAPACITOR 50V 1U	1	
C112		ECQM1H154JF	P.CAPACITOR 50V 0.15U	1	
C113		ECEA1HU010	E.CAPACITOR 50V 1U	1	
C114		ECEA1CU470	E.CAPACITOR 16V 47U	1	
C115		ECUM1H103ZFN	C.CAPACITOR CH 50V 0.01U	1	
C116		ECEA1CU470	E.CAPACITOR 16V 47U	1	
C117		ECUM1H103ZFN	C.CAPACITOR CH 50V 0.01U	1	
C118		ECEA1CU470	E.CAPACITOR 16V 47U	1	
C119		ECUM1H103ZFN	C.CAPACITOR CH 50V 0.01U	1	
C120		ECEA1CU470	E.CAPACITOR 16V 47U	1	
C121		ECUM1H103ZFN	C.CAPACITOR CH 50V 0.01U	1	
C122		ECEA1CU470	E.CAPACITOR 16V 47U	1	
C123		ECUM1H330JCN	C.CAPACITOR CH 50V 33P	1	
C124		ECUM1H103ZFN	C.CAPACITOR CH 50V 0.01U	1	
C125		ECEA1CU470	E.CAPACITOR 16V 47U	1	
C126		ECQM1H562JF	P.CAPACITOR 50V 5600P	1	
C127		ECQM1H393JF	P.CAPACITOR 50V 0.039U	1	
C128		ECQM1H104JF	P.CAPACITOR 50V 0.1U	1	
C129		ECEA1OM22	E.CAPACITOR 10V 22U	1	
C130		ECEA1HU010	E.CAPACITOR 50V 1U	1	

Ref.No.		Part No.	Part Name & Description	Pcs	Remarks
C131		ECEA1EN220S	E.CAPACITOR 25V 22U	1	
C132		ECQM1H103JF	P.CAPACITOR 50V 0.01U	1	
C133-36		ECUM1H103ZFN	C.CAPACITOR CH 50V 0.01U	4	
C137		ECEA1CU101	E.CAPACITOR 16V 100U	1	
C138		ECEA1CU470	E.CAPACITOR 16V 47U	1	
C139		ECQM1H822JF	P.CAPACITOR 50V 8200P	1	
C140		ECUM1H102JCN	C.CAPACITOR CH 50V 1000P	1	
C141		ECEA1HN010S	E.CAPACITOR 50V 1U	1	
C142		ECEA1CU101	E.CAPACITOR 16V 100U	1	
C143		ECEA1CU470	E.CAPACITOR 16V 47U	1	
C144		ECEA1CU220	E.CAPACITOR 16V 22U	1	
C145		ECEA1AU470	E.CAPACITOR 10V 47U	1	
C146		ECUM1H103ZFN	C.CAPACITOR CH 50V 0.01U	1	
C147		ECEA1HUR47	E.CAPACITOR 50V 0.47U	1	
C148		ECEA1CU470	E.CAPACITOR 16V 47U	1	
C149,50		ECUM1H103ZFN	C.CAPACITOR CH 50V 0.01U	2	
C151		ECEA1HN010S	E.CAPACITOR 50V 1U	1	
C152,53		ECUM1H103ZFN	C.CAPACITOR CH 50V 0.01U	2	
C154		ECUM1H152KBN	C.CAPACITOR CH 50V 1500P	1	
C155		ECEA1HN100S	E.CAPACITOR 50V 10U	1	
C156		ECEA1HUR47	E.CAPACITOR 50V 0.47U	1	
C157,58		ECUM1H103ZFN	C.CAPACITOR CH 50V 0.01U	2	
C159		ECQM1H104JF	P.CAPACITOR 50V 0.1U	1	
C160		ECUM1H103ZFN	C.CAPACITOR CH 50V 0.01U	1	
C161		ECQM1H104JF	P.CAPACITOR 50V 0.1U	1	
C162,63		ECQM1H103JF	P.CAPACITOR 50V 0.01U	2	
C164		ECEA1HU4R7	E.CAPACITOR 50V 4.7U	1	
C165-67		ECUM1H103ZFN	C.CAPACITOR CH 50V 0.01U	3	
C168		ECEA1EU100	E.CAPACITOR 25V 10U	1	
C169		ECQM1H103JF	P.CAPACITOR 50V 0.01U	1	
C170		ECUM1H471JCN	C.CAPACITOR CH 50V 470P	1	
C171,72		ECUM1H103ZFN	C.CAPACITOR CH 50V 0.01U	2	
C173		ECUM1H101JCN	C.CAPACITOR CH 50V 100P	1	
C174		ECUM1H103ZFN	C.CAPACITOR CH 50V 0.01U	1	
C175		ECEA1HU2R2	E.CAPACITOR 50V 2.2U	1	
C176		ECEA1CU470	E.CAPACITOR 16V 47U	1	
C177		ECQM1H222JF	P.CAPACITOR 50V 2200P	1	
C179		ECUM1H221JCN	C.CAPACITOR CH 50V 220P	1	
C301		ECEA1AU330	E.CAPACITOR 10V 33U	1	
C302		ECUM1H103ZFN	C.CAPACITOR CH 50V 0.01U	1	
C303		ECQM1H562JF	P.CAPACITOR 50V 5600P	1	
C304		ECQM1H392JF	P.CAPACITOR 50V 3900P	1	
C305		ECUM1H103ZFN	C.CAPACITOR CH 50V 0.01U	1	
C306		ECQM1H123JF	P.CAPACITOR 50V 0.012U	1	
C307		ECEA1CN470S	E.CAPACITOR 16V 47U	1	
C308		ECEAOJU221	E.CAPACITOR 6.3V 220U	1	
C309		ECEA1HU2R2	E.CAPACITOR 50V 2.2U	1	
C310		ECQM1H104JF	P.CAPACITOR 50V 0.1U	1	
C311		ECUM1H153KBN	C.CAPACITOR CH 50V 0.015U	1	
C312		ECEA1HN010S	E.CAPACITOR 50V 1U	1	
C313,14		ECUM1H103ZFN	C.CAPACITOR CH 50V 0.01U	2	
C315		ECQM1H104JF	P.CAPACITOR 50V 0.1U	1	
C316		ECUM1E273KBN	C.CAPACITOR CH 25V 0.027U	1	
C317		ECEA1HN2R2S	E.CAPACITOR 50V 2.2U	1	
C318-20		ECUM1H103ZFN	C.CAPACITOR CH 50V 0.01U	3	
C321		ECEA1CU100	E.CAPACITOR 16V 10U	1	
C322		ECEAOJU470	E.CAPACITOR 6.3V 47U	1	
C323		ECUM1H103ZFN	C.CAPACITOR CH 50V 0.01U	1	
C324		ECEAOJU102	E.CAPACITOR 6.3V 1000U	1	
C327		ECEA1HU2R2	E.CAPACITOR 50V 2.2U	1	
C330-36		ECUM1H103ZFN	C.CAPACITOR CH 50V 0.01U	7	
C338,39		ECEA1CU100	E.CAPACITOR 16V 10U	2	
C342		ECQM1H104JF	P.CAPACITOR 50V 0.1U	1	
C401-03		ECUM1H103ZFN	C.CAPACITOR CH 50V 0.01U	3	
C406-10		ECUM1H103ZFN	C.CAPACITOR CH 50V 0.01U	5	
C454		ECUM1H103ZFN	C.CAPACITOR CH 50V 0.01U	1	
C492		ECUM1H103ZFN	C.CAPACITOR CH 50V 0.01U	1	
C495,96		ECUM1H103ZFN	C.CAPACITOR CH 50V 0.01U	2	
C501		ECUM1H103ZFN	C.CAPACITOR CH 50V 0.01U	1	
C502		ECEA1CU470	E.CAPACITOR 16V 47U	1	
C503		ECEA1ESS471	E.CAPACITOR 25V 470U	1	
C504		ECUM1E473KBN	C.CAPACITOR CH 25V 0.047U	1	
C505		ECUM1H561JCN	C.CAPACITOR CH 50V 560P	1	
C506		ECUM1H820JCN	C.CAPACITOR CH 50V 82P	1	
C507		ECUM1H561JCN	C.CAPACITOR CH 50V 560P	1	

Refer to the P.C.BOARDS LIST, page 6-1-1, before using this page.

Ref.No.		Part No.	Part Name & Description	Pcs	Remarks
C508		ECEA1HU010	E.CAPACITOR 50V 1U	1	
C509-13		ECEA1ESS101	E.CAPACITOR 25V 100U	5	
C514		ECQM1H104JF	P.CAPACITOR 50V 0.1U	1	
C515		ECEA1EU4R7	E.CAPACITOR 25V 4.7U	1	
C516-18		ECEA1HN4R7S	E.CAPACITOR 50V 4.7U	3	
C519		ECEA1HU010	E.CAPACITOR 50V 1U	1	
C520-22		ECUM1H103KBN	C.CAPACITOR CH 50V 0.01U	3	
C523		ECQM1H104JF	P.CAPACITOR 50V 0.1U	1	
C524		ECEA1EU4R7	E.CAPACITOR 25V 4.7U	1	
C525,26		ECEA1HN4R7S	E.CAPACITOR 50V 4.7U	2	
C527		ECQM1H104JF	P.CAPACITOR 50V 0.1U	1	
C528		ECEA1HU010	E.CAPACITOR 50V 1U	1	
C529-31		ECUM1H103KBN	C.CAPACITOR CH 50V 0.01U	3	
C532		ECEA1EU4R7	E.CAPACITOR 25V 4.7U	1	
C533,34		ECEA1HN4R7S	E.CAPACITOR 50V 4.7U	2	
C535		ECQM1H104JF	P.CAPACITOR 50V 0.1U	1	
C536		ECEA1HU010	E.CAPACITOR 50V 1U	1	
C537-39		ECUM1H103KBN	C.CAPACITOR CH 50V 0.01U	3	
C540		ECEA1EU4R7	E.CAPACITOR 25V 4.7U	1	
C541-43		ECEA1HN4R7S	E.CAPACITOR 50V 4.7U	3	
C544		ECQM1H104JF	P.CAPACITOR 50V 0.1U	1	
C545		ECEA1HU010	E.CAPACITOR 50V 1U	1	
C546-48		ECUM1H103KBN	C.CAPACITOR CH 50V 0.01U	3	
C549		ECEA1AU470	E.CAPACITOR 10V 47U	1	
C550		ECUM1E473KBN	C.CAPACITOR CH 25V 0.047U	1	
C551		ECEA1HN4R7S	E.CAPACITOR 50V 4.7U	1	
C552		ECQM1H104JF	P.CAPACITOR 50V 0.1U	1	
C553		ECEA1HN4R7S	E.CAPACITOR 50V 4.7U	1	
C558-63		ECQM1H104JF	P.CAPACITOR 50V 0.1U	6	
C600		ECUM1H680JCN	C.CAPACITOR CH 50V 68P	1	
C601		ECUM1H050DCN	C.CAPACITOR CH 50V 50P	1	
C602		ECUM1H680JCN	C.CAPACITOR CH 50V 68P	1	
C603		ECUM1H050DCN	C.CAPACITOR CH 50V 50P	1	
C900-11		ECUM1H103ZFN	C.CAPACITOR CH 50V 0.01U	12	
D1		MA151K	DIODE	1	
D4		MA151K	DIODE	1	
D101		MA151K	DIODE	1	
D102		MA153	DIODE	1	
D103		MA151WK	DIODE	1	
D104		MA151K	DIODE	1	
D105		MA151WK	DIODE	1	
D106,07		MA151WA	DIODE	2	
D108		MA151K	DIODE	1	
D109		MA151WK	DIODE	1	
D110,11		MA153	DIODE	2	
D112		MA151WK	DIODE	1	
D113,14		MA151K	DIODE	2	
D115		MA153	DIODE	1	
D116		MA151K	DIODE	1	
D119		MA151WK	DIODE	1	
D120-22		MA151WA	DIODE	3	
D123		MA151K	DIODE	1	
D125		MA151K	DIODE	1	
D126,27		MA153	DIODE	2	
D128		MA151WA	DIODE	1	
D129		MA151K	DIODE	1	
D301,02		MA151K	DIODE	2	
D303		MA151WK	DIODE	1	
D304		MA151WA	DIODE	1	
D305		MA151K	DIODE	1	
D307		MA151WA	DIODE	1	
D309		MA151WK	DIODE	1	
D310		MA151K	DIODE	1	
D313		MA151WA	DIODE	1	
D314-17		MA151WK	DIODE	4	
D318		MA151K	DIODE	1	
D319,20		MA151WK	DIODE	2	
D321,22		MA151K	DIODE	2	
D323,24		MA151WK	DIODE	2	
D325		MA151K	DIODE	1	
D330		MA151K	DIODE	1	
D333		MA151WK	DIODE	1	

Ref.No.		Part No.	Part Name & Description	Pcs	Remarks
D334-36		MA151K	DIODE	3	
D337		ERJ6GEYJ824	M.RESISTOR CH 1/10W 820K	1	
D338		MA151K	DIODE	1	
D340		MA151WA	DIODE	1	
D341		MA151K	DIODE	1	
D345,46		MA151WA	DIODE	2	
D349		MA151WK	DIODE	1	
D351		MA151K	DIODE	1	
D501		MA151K	DIODE	1	
D502		MA151WK	DIODE	1	
D503		MA153	DIODE	1	
D504		MA151WK	DIODE	1	
D505,06		MA151K	DIODE	2	
D507		MA151WK	DIODE	1	
D508,09		MA151K	DIODE	2	
D510		MA151WK	DIODE	1	
D511		MA151K	DIODE	1	
D514-17		MA701A	DIODE	4	
D572		MA151K	DIODE	1	
IC1		LM2904M	IC	1	
IC2		LM2903M	IC	1	
IC3		LM2904M	IC	1	
IC4		NJM4558M	IC	1	
IC5		MC14538BF	IC	1	
IC6		UPD65031F405	IC	1	
IC7		MN53015VZW	IC	1	
IC8		MC14049UBF	IC	1	
IC9		MC14013BF	IC	1	
IC10		MM74HC221AM	IC	1	
IC11		AN78L05	IC	1	
IC12		MC14021BF	IC	1	
IC13		MC14094BF	IC	1	
IC14		MC14053BF	IC	1	(R)
IC15		MC14049UBF	IC	1	
IC16		MC14050BF	IC	1	
IC17		SN74LS01NS	IC	1	
IC18		MN5102OVZZ	IC	1	
IC101		LM2904M	IC	1	
IC102		LM2903M	IC	1	
IC103		LM2904M	IC	1	
IC104		MC14538BF	IC	1	
IC105		AN79L09	IC	1	
IC106		AN78N09	IC	1	
IC107		DN74LS293S	IC	1	
IC108		MC74HC00AF	IC	1	
IC109		MN6064R	IC	1	
IC110		MN6168VIA	IC	1	
IC111		MC74HCU04F	IC	1	
IC112		MC14049UBF	IC	1	
IC113,14		LM2904M	IC	2	
IC115		LM2903M	IC	1	
IC116,17		LM2904M	IC	2	
IC118-20		MC14066BF	IC	3	
IC121		MC14052BF	IC	1	
IC122,23		MC14053BF	IC	2	(R)
IC124		MN53030VYA	IC	1	
IC125		MN53007VYC	IC	1	
IC126		UPC4558G	IC	1	
IC128		NJM4558M	IC	1	
IC129		MC14538BF	IC	1	
IC130		MC14013BF	IC	1	
IC131		LM2904M	IC	1	
IC132		UPC4558G	IC	1	
IC133		MN4030BS	IC	1	
IC134		MC14538BF	IC	1	
IC135		MC14053BF	IC	1	(R)
IC136		MC74HC02AF	IC	1	
IC137		MC14538BF	IC	1	
IC301		AN78L05	IC	1	
IC302		LM2904M	IC	1	
IC303		LM2902M	IC	1	
IC304		MC14053BF	IC	1	(R)

Refer to the P.C.BOARDS LIST, page 6-1-1, before using this page.

Ref.No.		Part No.	Part Name & Description	Pcs	Remarks
IC305		MC14066BF	IC	1	
IC306		LM2904M	IC	1	
IC307		LM2902M	IC	1	
IC308,09		LM2904M	IC	2	
IC310-13		MC14066BF	IC	4	
IC314		MC14028BF	IC	1	
IC315		MC14081BF	IC	1	
IC316		NJM2901M	IC	1	
IC318		MC14538BF	IC	1	
IC319		MC14049UBF	IC	1	
IC501		BA6149LS	IC	1	
IC502		PU4213	IC	1	
IC503-06		AN3821K	IC	4	
IC600,01		MC74HCU04F	IC	2	
IC800		LM2904M	IC	1	
L1		VLP0017	COIL	1	
L2-14		VLQEL05S221J	COIL 220UH	3	
L101,02		VLQEL05S221J	COIL 220UH	2	
L501		VLQ0214	COIL 50UH	1	
L504-07		VLQ0129	COIL 300UH	4	
Q1,Q2		UN2213	TRANSISTOR-RESISTOR	2	
Q5-Q9		UN2213	TRANSISTOR-RESISTOR	5	
Q12-16		UN2213	TRANSISTOR-RESISTOR	5	
Q101		2SD601	TRANSISTOR CHIP	1	(Q,R)
Q102		UN2213	TRANSISTOR-RESISTOR	1	
Q103		2SJ43	TRANSISTOR	1	
Q104		UN2213	TRANSISTOR-RESISTOR	1	
Q105		2SD601	TRANSISTOR CHIP	1	(Q,R)
Q106-08		UN2213	TRANSISTOR-RESISTOR	3	
Q109		2SD601	TRANSISTOR CHIP	1	(Q,R)
Q110-19		UN2213	TRANSISTOR-RESISTOR	10	
Q120		2SD601	TRANSISTOR CHIP	1	(Q,R)
Q121		UN2213	TRANSISTOR-RESISTOR	1	
Q122		2SD601	TRANSISTOR CHIP	1	(Q,R)
Q123,24		UN2213	TRANSISTOR-RESISTOR	2	
Q125		2SB709	TRANSISTOR CHIP	1	(Q,R)
Q126		2SD601	TRANSISTOR CHIP	1	(Q,R)
Q127		UN2115	COMBINATION PARTS	1	
Q128		UN2213	TRANSISTOR-RESISTOR	1	
Q129		UN2214	TRANSISTOR-RESISTOR	1	
Q130		2SK374	TRANSISTOR	1	
Q131-33		UN2213	TRANSISTOR-RESISTOR	3	
Q134,35		2SB709	TRANSISTOR CHIP	2	(Q,R)
Q136-39		UN2213	TRANSISTOR-RESISTOR	4	
Q301,02		UN2213	TRANSISTOR-RESISTOR	2	
Q303		UN2113	TRANSISTOR-RESISTOR	1	
Q304		UN2213	TRANSISTOR-RESISTOR	1	
Q305		UN2113	TRANSISTOR-RESISTOR	1	
Q306-09		UN2213	TRANSISTOR-RESISTOR	4	
Q312-14		UN2213	TRANSISTOR-RESISTOR	3	
Q316		2SD601	TRANSISTOR CHIP	1	(Q,R)
Q317		UN2213	TRANSISTOR-RESISTOR	1	
Q319		2SD601	TRANSISTOR CHIP	1	(Q,R)
Q320		UN2213	TRANSISTOR-RESISTOR	1	
Q336,37		UN2213	TRANSISTOR-RESISTOR	2	
Q340		UN2213	TRANSISTOR-RESISTOR	1	
Q343		UN2213	TRANSISTOR-RESISTOR	1	
Q346,47		UN2213	TRANSISTOR-RESISTOR	2	
Q501-04		2SB709	TRANSISTOR CHIP	4	(Q,R)
Q505		UN2113	TRANSISTOR-RESISTOR	1	
Q506		UN2213	TRANSISTOR-RESISTOR	1	
Q507		UN2113	TRANSISTOR-RESISTOR	1	
Q508,09		UN2213	TRANSISTOR-RESISTOR	2	
			RESISTORS		
R1		ERJ6GEYJ103	M.RESISTOR CH 1/10W 10K	1	
R2		ERJ6GEYJ683	M.RESISTOR CH 1/10W 68K	1	

Ref.No.		Part No.	Part Name & Description	Pcs	Remarks
R3		ERJ6GEYJ103	M.RESISTOR CH 1/10W 10K	1	
R4		ERJ6GEYJ105	M.RESISTOR CH 1/10W 1M	1	
R5,R6		ERJ6GEYJ103	M.RESISTOR CH 1/10W 10K	2	
R7		ERJ6GEYJ155	M.RESISTOR CH 1/10W 1.5M	1	
R8		ERJ6GEYJ103	M.RESISTOR CH 1/10W 10K	1	
R9		ERJ6GEYJ125	M.RESISTOR CH 1/10W 1.2M	1	
R10		ERJ6GEYJ563	M.RESISTOR CH 1/10W 56K	1	
R11,12		VRE0034E102	M.RESISTOR CH 1/10W 1K	2	
R13		ERJ6GEYJ123	M.RESISTOR CH 1/10W 12K	1	
R14		ERJ6GEYJ823	M.RESISTOR CH 1/10W 82K	1	
R15		ERJ6GEYJ393	M.RESISTOR CH 1/10W 39K	1	
R16		ERJ6GEYJ824	M.RESISTOR CH 1/10W 820K	1	
R17		ERJ6GEYJ822	M.RESISTOR CH 1/10W 8.2K	1	
R18		ERJ6GEYJ183	M.RESISTOR CH 1/10W 18K	1	
R19		ERJ6GEYJ882	M.RESISTOR CH1/10W 8.8K	1	
R20		ERJ6GEYJ822	M.RESISTOR CH 1/10W 8.2K	1	
R21		ERJ6GEYJ104	M.RESISTOR CH 1/10W 100K	1	
R22		ERJ6GEYJ472	M.RESISTOR CH 1/10W 4.7K	1	
R23		ERJ6GEYJ103	M.RESISTOR CH 1/10W 10K	1	
R24		ERJ6GEYJ563	M.RESISTOR CH 1/10W 56K	1	
R25		ERJ6GEYJ102	M.RESISTOR CH 1/10W 1K	1	
R27		ERJ6GEYJ123	M.RESISTOR CH 1/10W 12K	1	
R28-31		ERJ6GEYJ563	M.RESISTOR CH 1/10W 56K	4	
R34,35		ERJ6GEYJ103	M.RESISTOR CH 1/10W 10K	2	
R36		ERJ6GEYJ562	M.RESISTOR CH 1/10W 5.6K	1	
R37-44		ERJ6GEYJ563	M.RESISTOR CH 1/10W 56K	8	
R45		ERJ6GEYJ104	M.RESISTOR CH 1/10W 100K	1	
R50		ERJ6GEYJ563	M.RESISTOR CH 1/10W 56K	1	
R51		ERJ6GEYJ103	M.RESISTOR CH 1/10W 10K	1	
R52		ERJ6GEYJ474	M.RESISTOR CH 1/10W 470K	1	
R53		ERJ6GEYJ563	M.RESISTOR CH 1/10W 56K	1	
R54		ERJ6GEYJ103	M.RESISTOR CH 1/10W 10K	1	
R55		ERJ6GEYJ474	M.RESISTOR CH 1/10W 470K	1	
R56		ERJ6GEYJ563	M.RESISTOR CH 1/10W 56K	1	
R57		ERJ6GEYJ103	M.RESISTOR CH 1/10W 10K	1	
R58		ERJ6GEYJ474	M.RESISTOR CH 1/10W 470K	1	
R59		ERJ6GEYJ103	M.RESISTOR CH 1/10W 10K	1	
R60		ERJ6GEYJ102	M.RESISTOR CH 1/10W 1K	1	
R61		ERJ6GEYJ223	M.RESISTOR CH 1/10W 22K	1	
R62		ERJ6GEYJ103	M.RESISTOR CH 1/10W 10K	1	
R64		ERJ6GEYJ153	M.RESISTOR CH 1/10W 15K	1	
R65		ERJ6GEYJ683	M.RESISTOR CH 1/10W 68K	1	
R69,70		ERJ6GEYJ102	M.RESISTOR CH 1/10W 1K	2	
R101		ERJ6GEYJ103	M.RESISTOR CH 1/10W 10K	1	
R102		ERJ6GEYJ184	M.RESISTOR CH 1/10W 180K	1	
R103		ERJ6GEYJ102	M.RESISTOR CH 1/10W 1K	1	
R104		ERJ6GEYJ474	M.RESISTOR CH 1/10W 470K	1	
R105-07		ERJ6GEYJ103	M.RESISTOR CH 1/10W 10K	3	
R108		ERJ6GEYJ184	M.RESISTOR CH 1/10W 180K	1	
R109		ERJ6GEYJ102	M.RESISTOR CH 1/10W 1K	1	
R110		ERJ6GEYJ474	M.RESISTOR CH 1/10W 470K	1	
R111		ERJ6GEYJ103	M.RESISTOR CH 1/10W 10K	1	
R112		ERJ6GEYJ153	M.RESISTOR CH 1/10W 15K	1	
R113		ERJ6GEYJ562	M.RESISTOR CH 1/10W 5.6K	1	
R114		ERJ6GEYJ224	M.RESISTOR CH 1/10W 220K	1	
R115		ERJ6GEYJ682	M.RESISTOR CH 1/10W 6.8K	1	
R116		ERJ6GEYJ153	M.RESISTOR CH 1/10W 15K	1	
R117		ERJ6GEYJ104	M.RESISTOR CH 1/10W 100K	1	
R118		ERJ6GEYJ103	M.RESISTOR CH 1/10W 10K	1	
R119		ERJ6GEYJ153	M.RESISTOR CH 1/10W 15K	1	
R120-22		ERJ6GEYJ103	M.RESISTOR CH 1/10W 10K	3	
R123		ERJ6GEYJ105	M.RESISTOR CH 1/10W 1M	1	
R124		ERJ6GEYJ272	M.RESISTOR CH 1/10W 2.7K	1	
R125		ERJ6GEYJ103	M.RESISTOR CH 1/10W 10K	1	
R126-32		ERJ6GEYJ563	M.RESISTOR CH 1/10W 56K	7	
R133,34		ERJ6GEYJ103	M.RESISTOR CH 1/10W 10K	2	
R135,36		ERJ6GEYJ563	M.RESISTOR CH 1/10W 56K	2	
R137		ERJ6GEYJ103	M.RESISTOR CH 1/10W 10K	1	
R138		ERJ6GEYJ563	M.RESISTOR CH 1/10W 56K	1	
R139		ERJ6GEYJ224	M.RESISTOR CH 1/10W 220K	1	
R140		ERJ6GEYJ563	M.RESISTOR CH 1/10W 56K	1	
R141		ERJ6GEYJ224	M.RESISTOR CH 1/10W 220K	1	
R142		ERJ6GEYJ563	M.RESISTOR CH 1/10W 56K	1	
R143		ERJ6GEYJ223	M.RESISTOR CH 1/10W 22K	1	
R144		ERJ6GEYJ103	M.RESISTOR CH 1/10W 10K	1	

Refer to the P.C.BOARDS LIST, page 6-1-1, before using this page.

Ref.No.		Part No.	Part Name & Description	Pcs	Remarks
R145		ERJ6GEYJ563	M.RESISTOR CH 1/10W 56K	1	
R146		ERJ6GEYJ562	M.RESISTOR CH 1/10W 5.6K	1	
R147,48		ERJ6GEYJ273	M.RESISTOR CH 1/10W 27K	2	
R149		ERJ6GEYJ104	M.RESISTOR CH 1/10W 100K	1	
R150		ERJ6GEYJ183	M.RESISTOR CH 1/10W 18K	1	
R151		ERJ6GEYJ103	M.RESISTOR CH 1/10W 10K	1	
R152		ERJ6GEYJ824	M.RESISTOR CH 1/10W 820K	1	
R153		ERJ6GEYJ562	M.RESISTOR CH 1/10W 5.6K	1	
R154-56		ERJ6GEYJ393	M.RESISTOR CH 1/10W 39K	3	
R157,58		ERJ6GEYJ183	M.RESISTOR CH 1/10W 18K	2	
R159		ERJ6GEYJ682	M.RESISTOR CH 1/10W 6.8K	1	
R160		ERJ6GEYJ183	M.RESISTOR CH 1/10W 18K	1	
R161		ERJ6GEYJ103	M.RESISTOR CH 1/10W 10K	1	
R162		ERJ6GEYJ563	M.RESISTOR CH 1/10W 56K	1	
R163		ERJ6GEYJ103	M.RESISTOR CH 1/10W 10K	1	
R164		ERJ6GEYJ562	M.RESISTOR CH 1/10W 5.6K	1	
R165		ERJ6GEYJ563	M.RESISTOR CH 1/10W 56K	1	
R166		ERJ6GEYJ272	M.RESISTOR CH 1/10W 2.7K	1	
R167		ERJ6GEYJ333	M.RESISTOR CH 1/10W 33K	1	
R168		ERJ6GEYJ473	M.RESISTOR CH 1/10W 47K	1	
R169		ERJ6GEYJ183	M.RESISTOR CH 1/10W 18K	1	
R170,71		ERJ6GEYJ563	M.RESISTOR CH 1/10W 56K	2	
R172		ERJ6GEYJ102	M.RESISTOR CH 1/10W 1K	1	
R181,82		ERJ6GEYJ563	M.RESISTOR CH 1/10W 56K	2	
R183		ERJ6GEYJ102	M.RESISTOR CH 1/10W 1K	1	
R184		ERJ6GEYJ563	M.RESISTOR CH 1/10W 56K	1	
R185		ERJ6GEYJ104	M.RESISTOR CH 1/10W 100K	1	
R186		ERJ6GEYJ102	M.RESISTOR CH 1/10W 1K	1	
R187,88		ERJ6GEYJ822	M.RESISTOR CH 1/10W 8.2K	2	
R189		ERJ6GEYJ561	M.RESISTOR CH 1/10W 560	1	
R190		ERJ6GEYJ472	M.RESISTOR CH 1/10W 4.7K	1	
R191,92		ERJ6GEYJ563	M.RESISTOR CH 1/10W 56K	2	
R193,94		ERJ6GEYJ273	M.RESISTOR CH 1/10W 27K	2	
R195		ERJ6GEYJ562	M.RESISTOR CH 1/10W 5.6K	1	
R196		ERJ6GEYJ153	M.RESISTOR CH 1/10W 15K	1	
R197		ERJ6GEYJ332	M.RESISTOR CH 1/10W 3.3K	1	
R198		ERJ6GEYJ561	M.RESISTOR CH 1/10W 560	1	
R199		ERJ6GEYJ273	M.RESISTOR CH 1/10W 27K	1	
R200		ERJ6GEYJ223	M.RESISTOR CH 1/10W 22K	1	
R201		ERJ6GEYJ473	M.RESISTOR CH 1/10W 47K	1	
R202		ERJ6GEYJ562	M.RESISTOR CH 1/10W 5.6K	1	
R203		ERJ6GEYJ561	M.RESISTOR CH 1/10W 560	1	
R204		ERJ6GEYJ562	M.RESISTOR CH 1/10W 5.6K	1	
R205		ERJ6GEYJ101	M.RESISTOR CH 1/10W 100	1	
R206		ERJ6GEYJ104	M.RESISTOR CH 1/10W 100K	1	
R207-09		ERJ6GEYJ102	M.RESISTOR CH 1/10W 1K	3	
R210		ERJ6GEYJ153	M.RESISTOR CH 1/10W 15K	1	
R211		ERJ6GEYJ183	M.RESISTOR CH 1/10W 18K	1	
R212		ERJ6GEYJ683	M.RESISTOR CH 1/10W 68K	1	
R213-15		ERJ6GEYJ563	M.RESISTOR CH 1/10W 56K	3	
R216		ERJ6GEYJ105	M.RESISTOR CH 1/10W 1M	1	
R218		ERJ6GEYJ563	M.RESISTOR CH 1/10W 56K	1	
R219		ERJ6GEYJ103	M.RESISTOR CH 1/10W 10K	1	
R220		ERJ6GEYJ104	M.RESISTOR CH 1/10W 100K	1	
R222-27		ERJ6GEYJ563	M.RESISTOR CH 1/10W 56K	6	
R228		ERJ6GEYJ104	M.RESISTOR CH 1/10W 100K	1	
R229		ERJ6GEYJ223	M.RESISTOR CH 1/10W 22K	1	
R230		ERJ6GEYJ563	M.RESISTOR CH 1/10W 56K	1	
R231		ERJ6GEYJ104	M.RESISTOR CH 1/10W 100K	1	
R232		VREO034E272	M.RESISTOR CH 1/10W 2.7K	1	
R233		VREO034E104	M.RESISTOR CH 1/10W 100K	1	
R234		VREO034E272	M.RESISTOR CH 1/10W 2.7K	1	
R235		VREO034E104	M.RESISTOR CH 1/10W 100K	1	
R236		ERJ6GEYJ563	M.RESISTOR CH 1/10W 56K	1	
R237		ERJ6GEYJ824	M.RESISTOR CH 1/10W 820K	1	
R238		ERJ6GEYJ102	M.RESISTOR CH 1/10W 1K	1	
R239		ERJ6GEYJ103	M.RESISTOR CH 1/10W 10K	1	
R240		ERJ6GEYJ222	M.RESISTOR CH 1/10W 2.2K	1	
R241		ERJ6GEYJ104	M.RESISTOR CH 1/10W 100K	1	
R242		ERJ6GEYJ334	M.RESISTOR CH 1/10W 330K	1	
R243		ERJ6GEYJ101	M.RESISTOR CH 1/10W 100	1	
R244,45		ERJ6GEYJ103	M.RESISTOR CH 1/10W 10K	2	
R246		ERJ6GEYJ102	M.RESISTOR CH 1/10W 1K	1	
R247		ERJ6GEYJ103	M.RESISTOR CH 1/10W 10K	1	
R248		ERJ6GEYJ562	M.RESISTOR CH 1/10W 5.6K	1	

Ref.No.		Part No.	Part Name & Description	Pcs	Remarks
R249		ERJ6GEYJ392	M.RESISTOR CH 1/10W 3.9K	1	
R250		ERJ6GEYJ184	M.RESISTOR CH 1/10W 180K	1	
R251		ERJ6GEYJ224	M.RESISTOR CH 1/10W 220K	1	
R252		ERJ6GEYJ153	M.RESISTOR CH 1/10W 15K	1	
R253		ERJ6GEYJ564	M.RESISTOR CH 1/10W 560K	1	
R254-58		ERJ6GEYJ103	M.RESISTOR CH 1/10W 10K	5	
R259		ERJ6GEYJ223	M.RESISTOR CH 1/10W 22K	1	
R260		ERJ6GEYJ393	M.RESISTOR CH 1/10W 39K	1	
R261		ERJ6GEYJ823	M.RESISTOR CH 1/10W 82K	1	
R262		ERJ6GEYJ123	M.RESISTOR CH 1/10W 12K	1	
R263		ERJ6GEYJ183	M.RESISTOR CH 1/10W 18K	1	
R264		ERJ6GEYJ333	M.RESISTOR CH 1/10W 33K	1	
R265		ERJ6GEYJ683	M.RESISTOR CH 1/10W 68K	1	
R266-69		ERJ6GEYJ563	M.RESISTOR CH 1/10W 56K	4	
R270		ERJ6GEYJ562	M.RESISTOR CH 1/10W 5.6K	1	
R271		ERJ6GEYJ103	M.RESISTOR CH 1/10W 10K	1	
R273		ERJ6GEYJ393	M.RESISTOR CH 1/10W 39K	1	
R274		ERJ6GEYJ181	M.RESISTOR CH 1/10W 180	1	
R275		ERJ6GEYJ563	M.RESISTOR CH 1/10W 56K	1	
R276,77		VREO034E102	M.RESISTOR CH 1/10W 1K	2	
R278		ERJ6GEYJ472	M.RESISTOR CH 1/10W 4.7K	1	
R279-81		ERJ6GEYJ563	M.RESISTOR CH 1/10W 56K	3	
R282		ERJ6GEYJ124	M.RESISTOR CH 1/10W 120K	1	
R283		ERJ6GEYJ103	M.RESISTOR CH 1/10W 10K	1	
R284		ERJ6GEYJ272	M.RESISTOR CH 1/10W 2.7K	1	
R285		ERJ6GEYJ122	M.RESISTOR CH 1/10W 1.2K	1	
R286,87		ERJ6GEYJ472	M.RESISTOR CH 1/10W 4.7K	2	
R288		ERJ6GEYJ473	M.RESISTOR CH 1/10W 47K	1	
R289		ERJ6GEYJ823	M.RESISTOR CH 1/10W 82K	1	
R301		ERJ6GEYJ563	M.RESISTOR CH 1/10W 56K	1	
R302,03		ERJ6GEYJ103	M.RESISTOR CH 1/10W 10K	2	
R304		ERJ6GEYJ563	M.RESISTOR CH 1/10W 56K	1	
R305		ERJ6GEYJ104	M.RESISTOR CH 1/10W 100K	1	
R306		ERJ6GEYJ683	M.RESISTOR CH 1/10W 68K	1	
R307		ERJ6GEYJ223	M.RESISTOR CH 1/10W 22K	1	
R308		ERJ6GEYJ103	M.RESISTOR CH 1/10W 10K	1	
R309		ERJ6GEYJ472	M.RESISTOR CH 1/10W 4.7K	1	
R310		ERJ6GEYJ822	M.RESISTOR CH 1/10W 8.2K	1	
R311		ERJ6GEYJ392	M.RESISTOR CH 1/10W 3.9K	1	
R312		ERJ6GEYJ153	M.RESISTOR CH 1/10W 15K	1	
R313		ERJ6GEYJ332	M.RESISTOR CH 1/10W 3.3K	1	
R314		ERJ6GEYJ151	M.RESISTOR CH 1/10W 150	1	
R315,16		ERJ6GEYJ103	M.RESISTOR CH 1/10W 10K	2	
R317		ERJ6GEYJ683	M.RESISTOR CH 1/10W 68K	1	
R318		ERJ6GEYJ103	M.RESISTOR CH 1/10W 10K	1	
R319		ERJ6GEYJ273	M.RESISTOR CH 1/10W 27K	1	
R320		ERJ6GEYJ104	M.RESISTOR CH 1/10W 100K	1	
R321		ERJ6GEYJ223	M.RESISTOR CH 1/10W 22K	1	
R322		ERJ6GEYJ563	M.RESISTOR CH 1/10W 56K	1	
R325,26		VREO034E332	M.RESISTOR CH 1/10W 3.3K	2	
R327		ERJ6GEYJ223	M.RESISTOR CH 1/10W 22K	1	
R328		ERJ6GEYJ104	M.RESISTOR CH 1/10W 100K	1	
R329		ERJ6GEYJ393	M.RESISTOR CH 1/10W 39K	1	
R330		ERJ6GEYJ334	M.RESISTOR CH 1/10W 330K	1	
R331		ERJ6GEYJ474	M.RESISTOR CH 1/10W 470K	1	
R332,33		ERJ6GEYJ104	M.RESISTOR CH 1/10W 100K	2	
R334		ERJ6GEYJ105	M.RESISTOR CH 1/10W 1M	1	
R335		ERJ6GEYJ684	M.RESISTOR CH 1/10W 680K	1	
R336		ERJ6GEYJ473	M.RESISTOR CH 1/10W 47K	1	
R337,38		ERJ6GEYJ103	M.RESISTOR CH 1/10W 10K	2	
R339,40		VREO034E332	M.RESISTOR CH 1/10W 3.3K	2	
R341		ERJ6GEYJ223	M.RESISTOR CH 1/10W 22K	1	
R342		ERJ6GEYJ104	M.RESISTOR CH 1/10W 100K	1	
R343		ERJ6GEYJ473	M.RESISTOR CH 1/10W 47K	1	
R344		ERJ6GEYJ334	M.RESISTOR CH 1/10W 330K	1	
R345		ERJ6GEYJ474	M.RESISTOR CH 1/10W 470K	1	
R346		ERJ6GEYJ104	M.RESISTOR CH 1/10W 100K	1	
R347		ERJ6GEYJ105	M.RESISTOR CH 1/10W 1M	1	
R348		ERJ6GEYJ684	M.RESISTOR CH 1/10W 680K	1	
R349,50		ERJ6GEYJ103	M.RESISTOR CH 1/10W 10K	2	
R351		ERJ6GEYJ472	M.RESISTOR CH 1/10W 4.7K	1	
R352-55		ERJ6GEYJ103	M.RESISTOR CH 1/10W 10K	4	
R356		ERJ6GEYJ222	M.RESISTOR CH 1/10W 2.2K	1	
R357		ERJ6GEYJ223	M.RESISTOR CH 1/10W 22K	1	
R358		ERJ6GEYJ104	M.RESISTOR CH 1/10W 100K	1	

Refer to the P.C.BOARDS LIST, page 6-1-1, before using this page.

Ref.No.		Part No.	Part Name & Description	Pcs	Remarks
R359,60		ERJ6GEYJ103	M.RESISTOR CH 1/10W 10K	2	
R362,63		ERJ6GEYJ103	M.RESISTOR CH 1/10W 10K	2	
R365		ERJ6GEYJ104	M.RESISTOR CH 1/10W 100K	1	
R366		ERJ6GEYJ103	M.RESISTOR CH 1/10W 10K	1	
R367,68		ERJ6GEYJ563	M.RESISTOR CH 1/10W 56K	2	
R369		ERJ6GEYJ104	M.RESISTOR CH 1/10W 100K	1	
R370,71		ERJ6GEYJ103	M.RESISTOR CH 1/10W 10K	2	
R373,74		ERJ6GEYJ103	M.RESISTOR CH 1/10W 10K	2	
R376		ERJ6GEYJ104	M.RESISTOR CH 1/10W 100K	1	
R378,79		ERJ6GEYJ563	M.RESISTOR CH 1/10W 56K	2	
R380		ERJ6GEYJ103	M.RESISTOR CH 1/10W 10K	1	
R381		ERJ6GEYJ473	M.RESISTOR CH 1/10W 47K	1	
R382		ERJ6GEYJ683	M.RESISTOR CH 1/10W 68K	1	
R383		ERJ6GEYJ152	M.RESISTOR CH 1/10W 1.5K	1	
R386		ERJ6GEYJ182	M.RESISTOR CH 1/10W 1.8K	1	
R388		ERJ6GEYJ273	M.RESISTOR CH 1/10W 27K	1	
R389		ERJ6GEYJ153	M.RESISTOR CH 1/10W 15K	1	
R390		ERJ6GEYJ273	M.RESISTOR CH 1/10W 27K	1	
R391		ERJ6GEYJ153	M.RESISTOR CH 1/10W 15K	1	
R392,93		ERJ6GEYJ103	M.RESISTOR CH 1/10W 10K	2	
R394,95		VRE0034E102	M.RESISTOR CH 1/10W 1K	2	
R396,97		VRE0034E472	M.RESISTOR CH 1/10W 4.7K	2	
R398		ERJ6GEYJ183	M.RESISTOR CH 1/10W 18K	1	
R424		ERJ6GEYJ222	M.RESISTOR CH 1/10W 2.2K	1	
R427		ERJ6GEYJ333	M.RESISTOR CH 1/10W 33K	1	
R428		ERJ6GEYJ223	M.RESISTOR CH 1/10W 22K	1	
R432,33		ERJ6GEYJ393	M.RESISTOR CH 1/10W 39K	2	
R434		ERJ6GEYJ331	M.RESISTOR CH 1/10W 330	1	
R435		ERJ6GEYJ103	M.RESISTOR CH 1/10W 10K	1	
R437		ERJ6GEYJ684	M.RESISTOR CH 1/10W 680K	1	
R440		ERJ6GEYJ562	M.RESISTOR CH 1/10W 5.6K	1	
R441,42		ERJ6GEYJ105	M.RESISTOR CH 1/10W 1M	2	
R443		ERJ6GEYJ223	M.RESISTOR CH 1/10W 22K	1	
R445		ERJ6GEY0R00	M.RESISTOR CH 1/10W 0	1	
R446,47		ERJ6GEYJ562	M.RESISTOR CH 1/10W 5.6K	2	
R448,49		ERJ6GEYJ105	M.RESISTOR CH 1/10W 1M	2	
R460		ERJ6GEYJ103	M.RESISTOR CH 1/10W 10K	1	
R461		ERJ6GEY0R00	M.RESISTOR CH 1/10W 0	1	
R462		ERJ6GEYJ223	M.RESISTOR CH 1/10W 22K	1	
R463		ERJ6GEYJ331	M.RESISTOR CH 1/10W 330	1	
R464		ERJ6GEY0R00	M.RESISTOR CH 1/10W 0	1	
R465		ERJ6GEYJ223	M.RESISTOR CH 1/10W 22K	1	
R466		ERJ6GEYJ103	M.RESISTOR CH 1/10W 10K	1	
R467		ERJ6GEYJ473	M.RESISTOR CH 1/10W 47K	1	
R470		ERJ6GEYJ394	M.RESISTOR CH 1/10W 390K	1	
R496		ERJ6GEYJ564	M.RESISTOR CH 1/10W 560K	1	
R501		ERJ6GEYJ102	M.RESISTOR CH 1/10W 1K	1	
R502		ERJ6GEYJ103	M.RESISTOR CH 1/10W 10K	1	
R503		ERJ6GEYJ102	M.RESISTOR CH 1/10W 1K	1	
R504-07		ERJ6GEYJ821	M.RESISTOR CH 1/10W 820	4	
R508		ERJ6GEYJ473	M.RESISTOR CH 1/10W 47K	1	
R509-12		ERJ6GEYJ391	M.RESISTOR CH 1/10W 390	4	
R513		ERJ6GEYJ103	M.RESISTOR CH 1/10W 10K	1	
R514		ERJ6GEYJ224	M.RESISTOR CH 1/10W 220K	1	
R515		ERJ6GEYJ273	M.RESISTOR CH 1/10W 27K	1	
R516		ERJ6GEYJ103	M.RESISTOR CH 1/10W 10K	1	
R517		ERJ6GEYJ272	M.RESISTOR CH 1/10W 2.7K	1	
R518		ERJ6GEYJ104	M.RESISTOR CH 1/10W 100K	1	
R519		ERJ6GEYJ392	M.RESISTOR CH 1/10W 3.9K	1	
R520		ERJ6GEYJ333	M.RESISTOR CH 1/10W 33K	1	
R521,22		ERJ6GEYJ224	M.RESISTOR CH 1/10W 220K	2	
R523		ERX12SJR47	M.RESISTOR 1/2W 0.47	1	
R524		ERJ6GEYJ273	M.RESISTOR CH 1/10W 27K	1	
R525		ERJ6GEYJ272	M.RESISTOR CH 1/10W 2.7K	1	
R526		ERJ6GEYJ103	M.RESISTOR CH 1/10W 10K	1	
R527		ERJ6GEYJ104	M.RESISTOR CH 1/10W 100K	1	
R528		ERJ6GEYJ224	M.RESISTOR CH 1/10W 220K	1	
R529		ERJ6GEYJ392	M.RESISTOR CH 1/10W 3.9K	1	
R530		ERJ6GEYJ223	M.RESISTOR CH 1/10W 22K	1	
R531		ERJ6GEYJ224	M.RESISTOR CH 1/10W 220K	1	
R532		ERX12SJR68	M.RESISTOR 1/2W 0.68	1	
R533		ERJ6GEYJ224	M.RESISTOR CH 1/10W 220K	1	
R534		ERJ6GEYJ273	M.RESISTOR CH 1/10W 27K	1	
R535		ERJ6GEYJ103	M.RESISTOR CH 1/10W 10K	1	
R536		ERJ6GEYJ104	M.RESISTOR CH 1/10W 100K	1	

Ref.No.		Part No.	Part Name & Description	Pcs	Remarks
R537		ERX12SJR47	M.RESISTOR 1/2W 0.47	1	
R538-40		ERJ6GEYJ224	M.RESISTOR CH 1/10W 220K	3	
R541		ERJ6GEYJ272	M.RESISTOR CH 1/10W 2.7K	1	
R542		ERJ6GEYJ223	M.RESISTOR CH 1/10W 22K	1	
R543		ERJ6GEYJ273	M.RESISTOR CH 1/10W 27K	1	
R544		ERJ6GEYJ104	M.RESISTOR CH 1/10W 100K	1	
R545		ERJ6GEYJ103	M.RESISTOR CH 1/10W 10K	1	
R546		ERX12SJR47	M.RESISTOR 1/2W 0.47	1	
R547-49		ERJ6GEYJ224	M.RESISTOR CH 1/10W 220K	3	
R550		ERJ6GEYJ272	M.RESISTOR CH 1/10W 2.7K	1	
R551		ERJ6GEYJ223	M.RESISTOR CH 1/10W 22K	1	
R553		ERJ6GEY0R00	M.RESISTOR CH 1/10W 0	1	
R554		ERJ6GEYJ272	M.RESISTOR CH 1/10W 2.7K	1	
R555-57		ERJ6GEY0R00	M.RESISTOR CH 1/10W 0	3	
R600		ERJ6GEYJ271	M.RESISTOR CH 1/10W 270	1	
R601		ERJ6GEYJ105	M.RESISTOR CH 1/10W 1M	1	
R603		ERJ6GEYJ271	M.RESISTOR CH 1/10W 270	1	
R604		ERJ6GEYJ105	M.RESISTOR CH 1/10W 1M	1	
SW1,W2		VSR0032	VOLTAGE SELECT SWITCH	2	
SW3		VSS0126	SWITCH	1	
TP3-P7		VJR0646	TEST POINT	5	
TP13		VJR0646	TEST POINT	1	
TP15-17		VJR0646	TEST POINT	3	
TP19,20		VJR0646	TEST POINT	2	
TP102-05		VJR0646	TEST POINT	4	
TP108-18		VJR0646	TEST POINT	11	
TP201,02		VJR0646	TEST POINT	2	
TP302-04		VJR0646	TEST POINT	3	
TP306		VJR0646	TEST POINT	1	
TP309-12		VJR0646	TEST POINT	4	
TPG1-G3		VJR0646	TEST POINT	3	
VC101		ECV1ZW30X53	V.CAPACITOR 30P	1	
VR1		VRV0109B503	V.RESISTOR 50K	1	
VR3		VRV0109B203	V.RESISTOR 20K	1	
VR101		VRV0109B203	V.RESISTOR 20K	1	
VR102		VRV0109B103	V.RESISTOR 10K	1	
VR103		VRV0109B203	V.RESISTOR 20K	1	
VR104		VRV0109B502	V.RESISTOR 5K	1	
VR105		VRV0109B104	V.RESISTOR 100K	1	
VR301		VRV0109B502	V.RESISTOR 5K	1	
VR302,03		VRV0109B202	V.RESISTOR 2K	2	
VR304-07		VRV0109B503	V.RESISTOR 50K	4	
VR308		VRV0109B202	V.RESISTOR 2K	1	
VR309		VRV0109B503	V.RESISTOR 50K	1	
X101		VSX0217	CRYSTAL OSCILLATOR	1	
X501		VSX0136	CRYSTAL OSCILLATOR	1	
X600		VSX0126	CRYSTAL OSCILLATOR	1	
X601		VSX0086	CRYSTAL OSCILLATOR	1	
			MISCELLANEOUS		
		VML2143	CARD PULLER	1	
		VML2144	CARD PULLER	1	
		VMS4174	PIN	6	
		VMZ1091	BARRIER	1	
		VMZ1547	BARRIER	1	
		VSC2286	SHIELD CASE	1	
		VSC3056	SHIELD CASE	1	
		VXA3966	P.C.B. SHIELD PLATE	1	

Refer to the P.C.BOARDS LIST, page 6-1-1, before using this page.

Ref.No.		Part No.	Part Name & Description	Pcs	Remarks
		XNG26E	NUT	4	
		XYNV3+K6FR	SCREW	6	
		XYN26+C12	SCREW	4	

Refer to the P.C.BOARDS LIST, page 6-1-1, before using this page.

Ref.No.		Part No.	Part Name & Description	Pcs	Remarks
	■	VEP82061F	P.C.BOARD W/COMPONENT		FOR AU-63-E,B
			W5 SERVO		
			CAPACITORS		
C1		ECQM1H273JF	P.CAPACITOR 50V 0.027U	1	
C2		ECUM1H152JN	C.CAPACITOR CH 50V 1500P	1	
C3,C4		ECUM1H101JCN	C.CAPACITOR CH 50V 100P	2	
C5		ECEA1CU100	E.CAPACITOR 16V 10U	1	
C6		ECEA0JU101	E.CAPACITOR 6.3V 100U	1	
C7		ECEA1AU470	E.CAPACITOR 10V 47U	1	
C8		ECUM1H103ZFN	C.CAPACITOR CH 50V 0.01U	1	
C9		ECQM1H154JF	P.CAPACITOR 50V 0.15U	1	
C10		ECEA1HN2R2S	E.CAPACITOR 50V 2.2U	1	
C11		ECQM1H223JF	P.CAPACITOR 50V 0.022U	1	
C13		ECQP1H822JZ	P.CAPACITOR 50V 8200P	1	
C14		ECQM1H682JV	P.CAPACITOR 50V 6800P	1	
C15,16		ECUM1H103ZFN	C.CAPACITOR CH 50V 0.01U	2	
C17		ECQM1H394JV	P.CAPACITOR 50V 0.39U	1	
C18		ECEA1HU4R7	E.CAPACITOR 50V 4.7U	1	
C19		ECEA1AU470	E.CAPACITOR 10V 47U	1	
C20,21		ECUM1H103ZFN	C.CAPACITOR CH 50V 0.01U	2	
C22		ECEA1HU2R2	E.CAPACITOR 50V 2.2U	1	
C23,24		ECUM1E104ZFN	C.CAPACITOR CH 25V 0.1U	2	
C25		ECUM1H103ZFN	C.CAPACITOR CH 50V 0.01U	1	
C26		ECEA1AU470	E.CAPACITOR 10V 47U	1	
C27		ECUM1H103ZFN	C.CAPACITOR CH 50V 0.01U	1	
C28		ECEA1AU470	E.CAPACITOR 10V 47U	1	
C29		ECEA1AU330	E.CAPACITOR 10V 33U	1	
C30		ECUM1H103ZFN	C.CAPACITOR CH 50V 0.01U	1	
C31		ECEA1AU330	E.CAPACITOR 10V 33U	1	
C32		ECEA1AU470	E.CAPACITOR 10V 47U	1	
C33		ECUM1H103ZFN	C.CAPACITOR CH 50V 0.01U	1	
C34		ECEA1AU470	E.CAPACITOR 10V 47U	1	
C39		ECUM1H331JCN	C.CAPACITOR CH 50V 330P	1	
C40-42		ECUM1H103ZFN	C.CAPACITOR CH 50V 0.01U	3	
C43		ECUM1H101JCN	C.CAPACITOR CH 50V 100P	1	
C46		ECEA1CU470	E.CAPACITOR 16V 47U	1	
C47,48		ECUM1E104ZFN	C.CAPACITOR CH 25V 0.1U	2	
C101		ECQM1H104JF	P.CAPACITOR 50V 0.1U	1	
C102		ECUM1H151JCN	C.CAPACITOR CH 50V 150P	1	
C103		ECEA1CU470	E.CAPACITOR 16V 47U	1	
C104		ECEA1HU2R2	E.CAPACITOR 50V 2.2U	1	
C105		ECEA1CU101	E.CAPACITOR 16V 100U	1	
C106		ECQM1H104JF	P.CAPACITOR 50V 0.1U	1	
C107		ECUM1H151JCN	C.CAPACITOR CH 50V 150P	1	
C108		ECUM1H102JCN	C.CAPACITOR CH 50V 1000P	1	
C109		ECUM1H221JCN	C.CAPACITOR CH 50V 220P	1	
C110		ECQM1H103JF	P.CAPACITOR 50V 0.01U	1	
C111		ECEA1HU010	E.CAPACITOR 50V 1U	1	
C112		ECQM1H154JF	P.CAPACITOR 50V 0.15U	1	
C113		ECEA1HU010	E.CAPACITOR 50V 1U	1	
C114		ECEA1CU470	E.CAPACITOR 16V 47U	1	
C115		ECUM1H103ZFN	C.CAPACITOR CH 50V 0.01U	1	
C116		ECEA1CU470	E.CAPACITOR 16V 47U	1	
C117		ECUM1H103ZFN	C.CAPACITOR CH 50V 0.01U	1	
C118		ECEA1CU470	E.CAPACITOR 16V 47U	1	
C119		ECUM1H103ZFN	C.CAPACITOR CH 50V 0.01U	1	
C120		ECEA1CU470	E.CAPACITOR 16V 47U	1	
C121		ECUM1H103ZFN	C.CAPACITOR CH 50V 0.01U	1	
C122		ECEA1CU470	E.CAPACITOR 16V 47U	1	
C123		ECUM1H330JCN	C.CAPACITOR CH 50V 33P	1	
C124		ECUM1H103ZFN	C.CAPACITOR CH 50V 0.01U	1	
C125		ECEA1CU470	E.CAPACITOR 16V 47U	1	
C126		ECQM1H562JF	P.CAPACITOR 50V 5600P	1	
C127		ECQM1H393JF	P.CAPACITOR 50V 0.039U	1	
C128		ECQM1H104JF	P.CAPACITOR 50V 0.1U	1	
C129		ECEA10M22	E.CAPACITOR 10V 22U	1	
C130		ECEA1HU010	E.CAPACITOR 50V 1U	1	

Ref.No.		Part No.	Part Name & Description	Pcs	Remarks
C131		ECEA1EN220S	E.CAPACITOR 25V 22U	1	
C132		ECQM1H103JF	P.CAPACITOR 50V 0.01U	1	
C133-36		ECUM1H103ZFN	C.CAPACITOR CH 50V 0.01U	4	
C137		ECEA1CU101	E.CAPACITOR 16V 100U	1	
C139		ECQM1H822JF	P.CAPACITOR 50V 8200P	1	
C140		ECUM1H102JCN	C.CAPACITOR CH 50V 1000P	1	
C141		ECEA1HN010S	E.CAPACITOR 50V 1U	1	
C143		ECEA1CU470	E.CAPACITOR 16V 47U	1	
C145		ECEA1AU470	E.CAPACITOR 10V 47U	1	
C146		ECUM1H103ZFN	C.CAPACITOR CH 50V 0.01U	1	
C147		ECEA1HUR47	E.CAPACITOR 50V 0.47U	1	
C148		ECEA1CU470	E.CAPACITOR 16V 47U	1	
C149,50		ECUM1H103ZFN	C.CAPACITOR CH 50V 0.01U	2	
C151		ECEA1HN010S	E.CAPACITOR 50V 1U	1	
C152,53		ECUM1H103ZFN	C.CAPACITOR CH 50V 0.01U	2	
C154		ECUM1H152KBN	C.CAPACITOR CH 50V 1500P	1	
C155		ECEA1HN100S	E.CAPACITOR 50V 10U	1	
C156		ECEA1HUR47	E.CAPACITOR 50V 0.47U	1	
C157,58		ECUM1H103ZFN	C.CAPACITOR CH 50V 0.01U	2	
C159		ECQM1H104JF	P.CAPACITOR 50V 0.1U	1	
C160		ECUM1H103ZFN	C.CAPACITOR CH 50V 0.01U	1	
C161		ECQM1H104JF	P.CAPACITOR 50V 0.1U	1	
C162,63		ECQM1H103JF	P.CAPACITOR 50V 0.01U	2	
C164		ECEA1HU4R7	E.CAPACITOR 50V 4.7U	1	
C165-67		ECUM1H103ZFN	C.CAPACITOR CH 50V 0.01U	3	
C168		ECEA1EU100	E.CAPACITOR 25V 10U	1	
C169		ECQM1H103JF	P.CAPACITOR 50V 0.01U	1	
C170		ECUM1H471JCN	C.CAPACITOR CH 50V 470P	1	
C171,72		ECUM1H103ZFN	C.CAPACITOR CH 50V 0.01U	2	
C173		ECUM1H101JCN	C.CAPACITOR CH 50V 100P	1	
C174		ECUM1H103ZFN	C.CAPACITOR CH 50V 0.01U	1	
C175		ECEA1HU2R2	E.CAPACITOR 50V 2.2U	1	
C176		ECEA1CU470	E.CAPACITOR 16V 47U	1	
C177		ECQM1H222JF	P.CAPACITOR 50V 2200P	1	
C179		ECUM1H221JCN	C.CAPACITOR CH 50V 220P	1	
C301		ECEA1AU330	E.CAPACITOR 10V 33U	1	
C302		ECUM1H103ZFN	C.CAPACITOR CH 50V 0.01U	1	
C303		ECQM1H562JF	P.CAPACITOR 50V 5600P	1	
C304		ECQM1H392JF	P.CAPACITOR 50V 3900P	1	
C305		ECUM1H103ZFN	C.CAPACITOR CH 50V 0.01U	1	
C306		ECQM1H123JF	P.CAPACITOR 50V 0.012U	1	
C307		ECEA1CN470S	E.CAPACITOR 16V 47U	1	
C308		ECEA0JU221	E.CAPACITOR 6.3V 220U	1	
C309		ECEA1HU2R2	E.CAPACITOR 50V 2.2U	1	
C310		ECQM1H104JF	P.CAPACITOR 50V 0.1U	1	
C311		ECUM1H153KBN	C.CAPACITOR CH 50V 0.015U	1	
C312		ECEA1HN010S	E.CAPACITOR 50V 1U	1	
C313,14		ECUM1H103ZFN	C.CAPACITOR CH 50V 0.01U	2	
C315		ECQM1H104JF	P.CAPACITOR 50V 0.1U	1	
C316		ECUM1E273KBN	C.CAPACITOR CH 25V 0.027U	1	
C317		ECEA1HN2R2S	E.CAPACITOR 50V 2.2U	1	
C318-20		ECUM1H103ZFN	C.CAPACITOR CH 50V 0.01U	3	
C321		ECEA1CU100	E.CAPACITOR 16V 10U	1	
C322		ECEA0JU470	E.CAPACITOR 6.3V 47U	1	
C323		ECUM1H103ZFN	C.CAPACITOR CH 50V 0.01U	1	
C324		ECEA0JU102	E.CAPACITOR 6.3V 1000U	1	
C327		ECEA1HU2R2	E.CAPACITOR 50V 2.2U	1	
C330-36		ECUM1H103ZFN	C.CAPACITOR CH 50V 0.01U	7	
C338,39		ECEA1CU100	E.CAPACITOR 16V 10U	2	
C342		ECQM1H104JF	P.CAPACITOR 50V 0.1U	1	
C401-03		ECUM1H103ZFN	C.CAPACITOR CH 50V 0.01U	3	
C406-10		ECUM1H103ZFN	C.CAPACITOR CH 50V 0.01U	5	
C454		ECUM1H103ZFN	C.CAPACITOR CH 50V 0.01U	1	
C492		ECUM1H103ZFN	C.CAPACITOR CH 50V 0.01U	1	
C495,96		ECUM1H103ZFN	C.CAPACITOR CH 50V 0.01U	2	
C501		ECUM1H103ZFN	C.CAPACITOR CH 50V 0.01U	1	
C502		ECEA1CU470	E.CAPACITOR 16V 47U	1	
C503		ECEA1ESS471	E.CAPACITOR 25V 470U	1	
C504		ECUM1E473KBN	C.CAPACITOR CH 25V 0.047U	1	
C505		ECUM1H561JCN	C.CAPACITOR CH 50V 560P	1	
C506		ECUM1H820JCN	C.CAPACITOR CH 50V 82P	1	
C507		ECUM1H561JCN	C.CAPACITOR CH 50V 560P	1	
C508		ECEA1HU010	E.CAPACITOR 50V 1U	1	
C509-13		ECEA1ESS101	E.CAPACITOR 25V 100U	5	
C514		ECQM1H104JF	P.CAPACITOR 50V 0.1U	1	

Refer to the P.C.BOARDS LIST, page 6-1-1, before using this page.

Ref.No.		Part No.	Part Name & Description	Pcs	Remarks
C515		ECEA1EU4R7	E.CAPACITOR 25V 4.7U	1	
C516-18		ECEA1HN4R7S	E.CAPACITOR 50V 4.7U	3	
C519		ECEA1HU010	E.CAPACITOR 50V 1U	1	
C520-22		ECUM1H103KBN	C.CAPACITOR CH 50V 0.01U	3	
C523		ECQM1H104JF	P.CAPACITOR 50V 0.1U	1	
C524		ECEA1EU4R7	E.CAPACITOR 25V 4.7U	1	
C525,26		ECEA1HN4R7S	E.CAPACITOR 50V 4.7U	2	
C527		ECQM1H104JF	P.CAPACITOR 50V 0.1U	1	
C528		ECEA1HU010	E.CAPACITOR 50V 1U	1	
C529-31		ECUM1H103KBN	C.CAPACITOR CH 50V 0.01U	3	
C532		ECEA1EU4R7	E.CAPACITOR 25V 4.7U	1	
C533,34		ECEA1HN4R7S	E.CAPACITOR 50V 4.7U	2	
C535		ECQM1H104JF	P.CAPACITOR 50V 0.1U	1	
C536		ECEA1HU010	E.CAPACITOR 50V 1U	1	
C537-39		ECUM1H103KBN	C.CAPACITOR CH 50V 0.01U	3	
C540		ECEA1EU4R7	E.CAPACITOR 25V 4.7U	1	
C541-43		ECEA1HN4R7S	E.CAPACITOR 50V 4.7U	3	
C544		ECQM1H104JF	P.CAPACITOR 50V 0.1U	1	
C545		ECEA1HU010	E.CAPACITOR 50V 1U	1	
C546-48		ECUM1H103KBN	C.CAPACITOR CH 50V 0.01U	3	
C549		ECEA1AU470	E.CAPACITOR 10V 47U	1	
C550		ECUM1E473KBN	C.CAPACITOR CH 25V 0.047U	1	
C551		ECEA1HN4R7S	E.CAPACITOR 50V 4.7U	1	
C552		ECQM1H104JF	P.CAPACITOR 50V 0.1U	1	
C553		ECEA1HN4R7S	E.CAPACITOR 50V 4.7U	1	
C558-63		ECQM1H104JF	P.CAPACITOR 50V 0.1U	6	
C600		ECUM1H680JCN	C.CAPACITOR CH 50V 68P	1	
C601		ECUM1H050DCN	C.CAPACITOR CH 50V 5OP	1	
C602		ECUM1H680JCN	C.CAPACITOR CH 50V 68P	1	
C603		ECUM1H050DCN	C.CAPACITOR CH 50V 5OP	1	
C700		ECUM1H101JCN	C.CAPACITOR CH 50V 100P	1	
C701		ECQM1H104JF	P.CAPACITOR 50V 0.1U	1	
C702		ECUM1H103ZFN	C.CAPACITOR CH 50V 0.01U	1	
C703		ECEA1HN4R7S	E.CAPACITOR 50V 4.7U	1	
C704		ECUM1H103ZFN	C.CAPACITOR CH 50V 0.01U	1	
C705		ECQM1H682JF	P.CAPACITOR 50V 6800P	1	
C706-08		ECUM1H103ZFN	C.CAPACITOR CH 50V 0.01U	3	
C709		ECQP1H151JZ	P.CAPACITOR 50V 150U	1	
C710,11		ECUM1H103ZFN	C.CAPACITOR CH 50V 0.01U	2	
C712,13		ECQP1H151JZ	P.CAPACITOR 50V 150U	2	
C714-19		ECUM1H103ZFN	C.CAPACITOR CH 50V 0.01U	6	
C720		ECEA1CU220	E.CAPACITOR 16V 22U	1	
C721		ECQM1H122JF	P.CAPACITOR 50V 1200P	1	
C722		ECUM1H103ZFN	C.CAPACITOR CH 50V 0.01U	1	
C723		ECUM1H470JCN	C.CAPACITOR CH 50V 47P	1	
C724		ECUM1H180JCN	C.CAPACITOR CH 50V 18P	1	
C725		ECUM1H103ZFN	C.CAPACITOR CH 50V 0.01U	1	
C726		ECEA1CU330	E.CAPACITOR 16V 33U	1	
C727		ECQM1H124JF	P.CAPACITOR 50V 0.12U	1	
C728,29		ECUM1H103ZFN	C.CAPACITOR CH 50V 0.01U	2	
C730-32		ECUM1H472KBN	C.CAPACITOR CH 50V 4700P	3	
C733		ECQM1H124JF	P.CAPACITOR 50V 0.12U	1	
C734,35		ECUM1H103ZFN	C.CAPACITOR CH 50V 0.01U	2	
C736		ECQM1H182JF	P.CAPACITOR 50V 1800P	1	
C737		ECEA1HUR33	E.CAPACITOR 50V 0.33U	1	
C738		ECUM1H103ZFN	C.CAPACITOR CH 50V 0.01U	1	
C739		ECEA1CU100	E.CAPACITOR 16V 10U	1	
C740		ECEA1HUR33	E.CAPACITOR 50V 0.33U	1	
C741		ECUM1H103ZFN	C.CAPACITOR CH 50V 0.01U	1	
C742		ECEA1CU100	E.CAPACITOR 16V 10U	1	
C743		ECEA1HUR33	E.CAPACITOR 50V 0.33U	1	
C744		ECUM1H103ZFN	C.CAPACITOR CH 50V 0.01U	1	
C745		ECEA1CU100	E.CAPACITOR 16V 10U	1	
C746,47		ECEA1AU330	E.CAPACITOR 10V 33U	2	
C748		ECEA1HUR33	E.CAPACITOR 50V 0.33U	1	
C749		ECUM1H103ZFN	C.CAPACITOR CH 50V 0.01U	1	
C750		ECEA1CU100	E.CAPACITOR 16V 10U	1	
C751		ECUM1H103KBN	C.CAPACITOR CH 50V 0.01U	1	
C752		ECUM1H330JCN	C.CAPACITOR CH 50V 33P	1	
C753,54		ECEA1AU330	E.CAPACITOR 10V 33U	2	
C755		ECUM1H103KBN	C.CAPACITOR CH 50V 0.01U	1	
C756		ECUM1H103ZFN	C.CAPACITOR CH 50V 0.01U	1	
C757		ECUM1H271JCN	C.CAPACITOR CH 50V 270P	1	
C758		ECUM1H103ZFN	C.CAPACITOR CH 50V 0.01U	1	
C759		ECUM1H103KBN	C.CAPACITOR CH 50V 0.01U	1	

Ref.No.		Part No.	Part Name & Description	Pcs	Remarks
C760		ECUM1H103ZFN	C.CAPACITOR CH 50V 0.01U	1	
C761		ECUM1H330JCN	C.CAPACITOR CH 50V 33P	1	
C762		ECUM1H271JCN	C.CAPACITOR CH 50V 270P	1	
C763,64		ECEA1AU330	E.CAPACITOR 10V 33U	2	
C765		ECUM1H103KBN	C.CAPACITOR CH 50V 0.01U	1	
C900-11		ECUM1H103ZFN	C.CAPACITOR CH 50V 0.01U	12	
D1		MA151K	DIODE	1	
D4		MA151K	DIODE	1	
D101		MA151K	DIODE	1	
D102		MA153	DIODE	1	
D103		MA151WK	DIODE	1	
D104		MA151K	DIODE	1	
D105		MA151WK	DIODE	1	
D106,07		MA151WA	DIODE	2	
D108		MA151K	DIODE	1	
D109		MA151WK	DIODE	1	
D112		MA151WK	DIODE	1	
D113,14		MA151K	DIODE	2	
D115		MA153	DIODE	1	
D116		MA151K	DIODE	1	
D119		MA151WK	DIODE	1	
D120-22		MA151WA	DIODE	3	
D123		MA151K	DIODE	1	
D125		MA151K	DIODE	1	
D126,27		MA153	DIODE	2	
D128		MA151WA	DIODE	1	
D129		MA151K	DIODE	1	
D301,02		MA151K	DIODE	2	
D303		MA151WK	DIODE	1	
D304		MA151WA	DIODE	1	
D305		MA151K	DIODE	1	
D307		MA151WA	DIODE	1	
D309		MA151WK	DIODE	1	
D310		MA151K	DIODE	1	
D313		MA151WA	DIODE	1	
D314-17		MA151WK	DIODE	4	
D318		MA151K	DIODE	1	
D319,20		MA151WK	DIODE	2	
D321,22		MA151K	DIODE	2	
D323,24		MA151WK	DIODE	2	
D325		MA151K	DIODE	1	
D330		MA151K	DIODE	1	
D333		MA151WK	DIODE	1	
D334-38		MA151K	DIODE	5	
D340		MA151WA	DIODE	1	
D341		MA151K	DIODE	1	
D345,46		MA151WA	DIODE	2	
D349		MA151WK	DIODE	1	
D351		MA151K	DIODE	1	
D501		MA151K	DIODE	1	
D502		MA151WK	DIODE	1	
D503		MA153	DIODE	1	
D504		MA151WK	DIODE	1	
D505,06		MA151K	DIODE	2	
D507		MA151WK	DIODE	1	
D508,09		MA151K	DIODE	2	
D510		MA151WK	DIODE	1	
D511		MA151K	DIODE	1	
D514-17		MA701A	DIODE	4	
D572		MA151K	DIODE	1	
D700		MA151WA	DIODE	1	
D701,02		1SS101	DIODE	2	
D703		MA151K	DIODE	1	
D704-06		MA153	DIODE	3	
D707-09		LN25RP	LED	3	
D710		MA153	DIODE	1	
D711,12		MA1039	DIODE	2	
D713		MA153	DIODE	1	
D714,15		MA1039	DIODE	2	
D716-21		MA153	DIODE	6	

Refer to the P.C.BOARDS LIST, page 6-1-1, before using this page.

Ref.No.		Part No.	Part Name & Description	Pcs	Remarks
IC1		LM2904M	IC	1	
IC2		LM2903M	IC	1	
IC3		LM2904M	IC	1	
IC4		NJM4558M	IC	1	
IC5		MC14538BF	IC	1	
IC6		UPD65031F405	IC	1	
IC7		MN53015VZW	IC	1	
IC8		MC14049UBF	IC	1	
IC9		MC14013BF	IC	1	
IC10		MM74HC221AM	IC	1	
IC11		AN78L05	IC	1	
IC12		MC14021BF	IC	1	
IC13		MC14094BF	IC	1	
IC14		MC14053BF	IC	1	(R)
IC15		MC14049UBF	IC	1	
IC16		MC14050BF	IC	1	
IC18		MN51020VZZ	IC	1	
IC101		LM2904M	IC	1	
IC102		LM2903M	IC	1	
IC103		LM2904M	IC	1	
IC104		MC14538BF	IC	1	
IC105		AN79L09	IC	1	
IC106		AN78N09	IC	1	
IC107		DN74LS293S	IC	1	
IC108		MC74HC00AF	IC	1	
IC109		MN6064R	IC	1	
IC110		MN6168VIA	IC	1	
IC111		MC74HCU04F	IC	1	
IC112		MC14049UBF	IC	1	
IC113,14		LM2904M	IC	2	
IC115		LM2903M	IC	1	
IC116,17		LM2904M	IC	2	
IC118-20		MC14066BF	IC	3	
IC121		MC14052BF	IC	1	
IC123		MC14053BF	IC	1	(R)
IC124		MN53030VYA	IC	1	
IC125		MN53007VYC	IC	1	
IC126		UPC4558G	IC	1	
IC128		NJM4558M	IC	1	
IC129		MC14538BF	IC	1	
IC130		MC14013BF	IC	1	
IC131		LM2904M	IC	1	
IC132		UPC4558G	IC	1	
IC133		MN4030BS	IC	1	
IC134		MC14538BF	IC	1	
IC135		MC14053BF	IC	1	(R)
IC136		MC74HC02AF	IC	1	
IC137		MC14538BF	IC	1	
IC301		AN78L05	IC	1	
IC302		LM2904M	IC	1	
IC303		LM2902M	IC	1	
IC304		MC14053BF	IC	1	(R)
IC305		MC14066BF	IC	1	
IC306		LM2904M	IC	1	
IC307		LM2902M	IC	1	
IC308,09		LM2904M	IC	2	
IC310-13		MC14066BF	IC	4	
IC314		MC14028BF	IC	1	
IC315		MC14081BF	IC	1	
IC316		NJM2901M	IC	1	
IC318		MC14538BF	IC	1	
IC319		MC14049UBF	IC	1	
IC501		BA6149LS	IC	1	
IC502		PU4213	IC	1	
IC503-06		AN3821K	IC	4	
IC600,01		MC74HCU04F	IC	2	
IC700		AN608P	IC	1	
IC701		UPC4741G	IC	1	
IC702		TL431CLP	IC	1	
IC703		MC14053BF	IC	1	(R)
IC704		UPC4558G	IC	1	
IC705		UPC4082G	IC	1	
IC706		MC74HC157AF	IC	1	
IC707		MN18882	IC	1	

Ref.No.		Part No.	Part Name & Description	Pcs	Remarks
IC708		VSI0623	IC	1	
IC709		M51951BML	IC	1	
IC710		MC14538BF	IC	1	
IC711		MSM5210RS	IC	1	
IC712		UPD65024F137	IC	1	
IC713		UPC4082G	IC	1	
IC714		UPC4558G	IC	1	
IC715		MC14051BF	IC	1	
IC716		UPC4082G	IC	1	
IC717		UPC4741G	IC	1	
IC718		UPC4558G	IC	1	
IC719		MC14051BF	IC	1	
IC720		MC14053BF	IC	1	(R)
IC721		AN79L05	IC	1	
IC722		AN78L05	IC	1	
IC723		AN78L09	IC	1	
IC724		AN79L09	IC	1	
IC725,26		LM2902M	IC	2	
IC727		LM2903M	IC	1	
IC800		LM2904M	IC	1	
ICS708		VJS2336A028	CONNECTOR (FEMALE)	1	
L1		VLP0017	COIL	1	
L2-L4		VLQEL05S221J	COIL 220UH	3	
L101,02		VLQEL05S221J	COIL 220UH	2	
L501		VLQ0214	COIL 50UH	1	
L504-07		VLQ0129	COIL 300UH	4	
L701		VLQEL05S101J	COIL 100UH	1	
L702		VLQ0128	COIL 47UH	1	
Q1,Q2		UN2213	TRANSISTOR-RESISTOR	2	
Q8,Q9		UN2213	TRANSISTOR-RESISTOR	2	
Q10,11		UN2213	TRANSISTOR-RESISTOR	2	
Q17		UN2213	TRANSISTOR-RESISTOR	1	
Q101		2SD601	TRANSISTOR CHIP	1	(Q,R)
Q102		UN2213	TRANSISTOR-RESISTOR	1	
Q103		2SJ43	TRANSISTOR	1	
Q104		UN2213	TRANSISTOR-RESISTOR	1	
Q105		2SD601	TRANSISTOR CHIP	1	(Q,R)
Q106-08		UN2213	TRANSISTOR-RESISTOR	3	
Q109		2SD601	TRANSISTOR CHIP	1	(Q,R)
Q110-19		UN2213	TRANSISTOR-RESISTOR	10	
Q120		2SD601	TRANSISTOR CHIP	1	(Q,R)
Q123,24		UN2213	TRANSISTOR-RESISTOR	2	
Q128		UN2213	TRANSISTOR-RESISTOR	1	
Q129		UN2214	TRANSISTOR-RESISTOR	1	
Q130		2SK374	TRANSISTOR	1	
Q131-33		UN2213	TRANSISTOR-RESISTOR	3	
Q134,35		2SB709	TRANSISTOR CHIP	2	(Q,R)
Q137-39		UN2213	TRANSISTOR-RESISTOR	3	
Q140		MA151A	DIODE	1	
Q301,02		UN2213	TRANSISTOR-RESISTOR	2	
Q303		UN2113	TRANSISTOR-RESISTOR	1	
Q304		UN2213	TRANSISTOR-RESISTOR	1	
Q305		UN2113	TRANSISTOR-RESISTOR	1	
Q306-09		UN2213	TRANSISTOR-RESISTOR	4	
Q312-14		UN2213	TRANSISTOR-RESISTOR	3	
Q316		2SD601	TRANSISTOR CHIP	1	(Q,R)
Q317		UN2213	TRANSISTOR-RESISTOR	1	
Q319		2SD601	TRANSISTOR CHIP	1	(Q,R)
Q320		UN2213	TRANSISTOR-RESISTOR	1	
Q336,37		UN2213	TRANSISTOR-RESISTOR	2	
Q340		UN2213	TRANSISTOR-RESISTOR	1	
Q343		UN2213	TRANSISTOR-RESISTOR	1	
Q346,47		UN2213	TRANSISTOR-RESISTOR	2	
Q501-04		2SB709	TRANSISTOR CHIP	4	(Q,R)
Q505		UN2113	TRANSISTOR-RESISTOR	1	
Q506		UN2213	TRANSISTOR-RESISTOR	1	
Q507		UN2113	TRANSISTOR-RESISTOR	1	
Q508,09		UN2213	TRANSISTOR-RESISTOR	2	
Q700		UN2113	TRANSISTOR-RESISTOR	1	

Refer to the P.C.BOARDS LIST, page 6-1-1, before using this page.

Ref.No.		Part No.	Part Name & Description	Pcs	Remarks
Q701-11		UN2213	TRANSISTOR-RESISTOR	11	
			RESISTORS		
R1		ERJ6GEYJ103	M.RESISTOR CH 1/10W 10K	1	
R2		ERJ6GEYJ683	M.RESISTOR CH 1/10W 68K	1	
R3		ERJ6GEYJ103	M.RESISTOR CH 1/10W 10K	1	
R4		ERJ6GEYJ105	M.RESISTOR CH 1/10W 1M	1	
R5,R6		ERJ6GEYJ103	M.RESISTOR CH 1/10W 10K	2	
R7		ERJ6GEYJ155	M.RESISTOR CH 1/10W 1.5M	1	
R8		ERJ6GEYJ103	M.RESISTOR CH 1/10W 10K	1	
R9		ERJ6GEYJ125	M.RESISTOR CH 1/10W 1.2M	1	
R10		ERJ6GEYJ563	M.RESISTOR CH 1/10W 56K	1	
R11,12		VRB0034E102	M.RESISTOR CH 1/10W 1K	2	
R13		ERJ6GEYJ123	M.RESISTOR CH 1/10W 12K	1	
R14		ERJ6GEYJ823	M.RESISTOR CH 1/10W 82K	1	
R15		ERJ6GEYJ393	M.RESISTOR CH 1/10W 39K	1	
R16		ERJ6GEYJ824	M.RESISTOR CH 1/10W 820K	1	
R17		ERJ6GEYJ822	M.RESISTOR CH 1/10W 8.2K	1	
R18		ERJ6GEYJ183	M.RESISTOR CH 1/10W 18K	1	
R19,20		ERJ6GEYJ822	M.RESISTOR CH 1/10W 8.2K	2	
R21		ERJ6GEYJ104	M.RESISTOR CH 1/10W 100K	1	
R22		ERJ6GEYJ472	M.RESISTOR CH 1/10W 4.7K	1	
R23		ERJ6GEYJ103	M.RESISTOR CH 1/10W 10K	1	
R24		ERJ6GEYJ563	M.RESISTOR CH 1/10W 56K	1	
R25		ERJ6GEYJ102	M.RESISTOR CH 1/10W 1K	1	
R27		ERJ6GEYJ123	M.RESISTOR CH 1/10W 12K	1	
R28-31		ERJ6GEYJ563	M.RESISTOR CH 1/10W 56K	4	
R34,35		ERJ6GEYJ103	M.RESISTOR CH 1/10W 10K	2	
R36		ERJ6GEYJ562	M.RESISTOR CH 1/10W 5.6K	1	
R37-44		ERJ6GEYJ563	M.RESISTOR CH 1/10W 56K	8	
R45		ERJ6GEYJ104	M.RESISTOR CH 1/10W 100K	1	
R50		ERJ6GEYJ563	M.RESISTOR CH 1/10W 56K	1	
R51		ERJ6GEYJ103	M.RESISTOR CH 1/10W 10K	1	
R52		ERJ6GEYJ474	M.RESISTOR CH 1/10W 470K	1	
R53		ERJ6GEYJ563	M.RESISTOR CH 1/10W 56K	1	
R54		ERJ6GEYJ103	M.RESISTOR CH 1/10W 10K	1	
R55		ERJ6GEYJ474	M.RESISTOR CH 1/10W 470K	1	
R56		ERJ6GEYJ563	M.RESISTOR CH 1/10W 56K	1	
R57		ERJ6GEYJ103	M.RESISTOR CH 1/10W 10K	1	
R58		ERJ6GEYJ474	M.RESISTOR CH 1/10W 470K	1	
R59		ERJ6GEYJ103	M.RESISTOR CH 1/10W 10K	1	
R60		ERJ6GEYJ102	M.RESISTOR CH 1/10W 1K	1	
R61		ERJ6GEYJ223	M.RESISTOR CH 1/10W 22K	1	
R62		ERJ6GEYJ103	M.RESISTOR CH 1/10W 10K	1	
R64		ERJ6GEYJ153	M.RESISTOR CH 1/10W 15K	1	
R65		ERJ6GEYJ683	M.RESISTOR CH 1/10W 68K	1	
R69,70		ERJ6GEYJ102	M.RESISTOR CH 1/10W 1K	2	
R101		ERJ6GEYJ103	M.RESISTOR CH 1/10W 10K	1	
R102		ERJ6GEYJ184	M.RESISTOR CH 1/10W 180K	1	
R103		ERJ6GEYJ102	M.RESISTOR CH 1/10W 1K	1	
R104		ERJ6GEYJ474	M.RESISTOR CH 1/10W 470K	1	
R105-07		ERJ6GEYJ103	M.RESISTOR CH 1/10W 10K	3	
R108		ERJ6GEYJ184	M.RESISTOR CH 1/10W 180K	1	
R109		ERJ6GEYJ102	M.RESISTOR CH 1/10W 1K	1	
R110		ERJ6GEYJ474	M.RESISTOR CH 1/10W 470K	1	
R111		ERJ6GEYJ103	M.RESISTOR CH 1/10W 10K	1	
R112		ERJ6GEYJ153	M.RESISTOR CH 1/10W 15K	1	
R113		ERJ6GEYJ562	M.RESISTOR CH 1/10W 5.6K	1	
R114		ERJ6GEYJ224	M.RESISTOR CH 1/10W 220K	1	
R115		ERJ6GEYJ682	M.RESISTOR CH 1/10W 6.8K	1	
R116		ERJ6GEYJ153	M.RESISTOR CH 1/10W 15K	1	
R117		ERJ6GEYJ104	M.RESISTOR CH 1/10W 100K	1	
R118		ERJ6GEYJ103	M.RESISTOR CH 1/10W 10K	1	
R119		ERJ6GEYJ153	M.RESISTOR CH 1/10W 15K	1	
R120-22		ERJ6GEYJ103	M.RESISTOR CH 1/10W 10K	3	
R123		ERJ6GEYJ105	M.RESISTOR CH 1/10W 1M	1	
R124		ERJ6GEYJ272	M.RESISTOR CH 1/10W 2.7K	1	
R125		ERJ6GEYJ103	M.RESISTOR CH 1/10W 10K	1	
R126-32		ERJ6GEYJ563	M.RESISTOR CH 1/10W 56K	7	
R133,34		ERJ6GEYJ103	M.RESISTOR CH 1/10W 10K	2	
R135,36		ERJ6GEYJ563	M.RESISTOR CH 1/10W 56K	2	
R137		ERJ6GEYJ103	M.RESISTOR CH 1/10W 10K	1	
R138		ERJ6GEYJ563	M.RESISTOR CH 1/10W 56K	1	

Ref.No.		Part No.	Part Name & Description	Pcs	Remarks
R139		ERJ6GEYJ224	M.RESISTOR CH 1/10W 220K	1	
R140		ERJ6GEYJ563	M.RESISTOR CH 1/10W 56K	1	
R141		ERJ6GEYJ224	M.RESISTOR CH 1/10W 220K	1	
R142		ERJ6GEYJ563	M.RESISTOR CH 1/10W 56K	1	
R143		ERJ6GEYJ223	M.RESISTOR CH 1/10W 22K	1	
R144		ERJ6GEYJ103	M.RESISTOR CH 1/10W 10K	1	
R145		ERJ6GEYJ563	M.RESISTOR CH 1/10W 56K	1	
R146		ERJ6GEYJ562	M.RESISTOR CH 1/10W 5.6K	1	
R147,48		ERJ6GEYJ273	M.RESISTOR CH 1/10W 27K	2	
R149		ERJ6GEYJ104	M.RESISTOR CH 1/10W 100K	1	
R150		ERJ6GEYJ183	M.RESISTOR CH 1/10W 18K	1	
R151		ERJ6GEYJ103	M.RESISTOR CH 1/10W 10K	1	
R152		ERJ6GEYJ824	M.RESISTOR CH 1/10W 820K	1	
R153		ERJ6GEYJ562	M.RESISTOR CH 1/10W 5.6K	1	
R154-56		ERJ6GEYJ393	M.RESISTOR CH 1/10W 39K	3	
R157,58		ERJ6GEYJ183	M.RESISTOR CH 1/10W 18K	2	
R159		ERJ6GEYJ682	M.RESISTOR CH 1/10W 6.8K	1	
R160		ERJ6GEYJ183	M.RESISTOR CH 1/10W 18K	1	
R161		ERJ6GEYJ103	M.RESISTOR CH 1/10W 10K	1	
R162		ERJ6GEYJ563	M.RESISTOR CH 1/10W 56K	1	
R163		ERJ6GEYJ103	M.RESISTOR CH 1/10W 10K	1	
R164		ERJ6GEYJ562	M.RESISTOR CH 1/10W 5.6K	1	
R165		ERJ6GEYJ563	M.RESISTOR CH 1/10W 56K	1	
R166		ERJ6GEYJ272	M.RESISTOR CH 1/10W 2.7K	1	
R167		ERJ6GEYJ333	M.RESISTOR CH 1/10W 33K	1	
R168		ERJ6GEYJ473	M.RESISTOR CH 1/10W 47K	1	
R169		ERJ6GEYJ183	M.RESISTOR CH 1/10W 18K	1	
R170,71		ERJ6GEYJ563	M.RESISTOR CH 1/10W 56K	2	
R172		ERJ6GEYJ102	M.RESISTOR CH 1/10W 1K	1	
R181,82		ERJ6GEYJ563	M.RESISTOR CH 1/10W 56K	2	
R183		ERJ6GEYJ102	M.RESISTOR CH 1/10W 1K	1	
R184		ERJ6GEYJ563	M.RESISTOR CH 1/10W 56K	1	
R185		ERJ6GEYJ104	M.RESISTOR CH 1/10W 100K	1	
R186		ERJ6GEYJ102	M.RESISTOR CH 1/10W 1K	1	
R187,88		ERJ6GEYJ822	M.RESISTOR CH 1/10W 8.2K	2	
R189		ERJ6GEYJ561	M.RESISTOR CH 1/10W 560	1	
R190		ERJ6GEYJ472	M.RESISTOR CH 1/10W 4.7K	1	
R191,92		ERJ6GEYJ563	M.RESISTOR CH 1/10W 56K	2	
R193,94		ERJ6GEYJ273	M.RESISTOR CH 1/10W 27K	2	
R195		ERJ6GEYJ562	M.RESISTOR CH 1/10W 5.6K	1	
R196		ERJ6GEYJ153	M.RESISTOR CH 1/10W 15K	1	
R197		ERJ6GEYJ332	M.RESISTOR CH 1/10W 3.3K	1	
R204		ERJ6GEYJ562	M.RESISTOR CH 1/10W 5.6K	1	
R205		ERJ6GEYJ101	M.RESISTOR CH 1/10W 100	1	
R206		ERJ6GEYJ104	M.RESISTOR CH 1/10W 100K	1	
R207-09		ERJ6GEYJ102	M.RESISTOR CH 1/10W 1K	3	
R210		ERJ6GEYJ153	M.RESISTOR CH 1/10W 15K	1	
R211		ERJ6GEYJ183	M.RESISTOR CH 1/10W 18K	1	
R212		ERJ6GEYJ683	M.RESISTOR CH 1/10W 68K	1	
R213-15		ERJ6GEYJ563	M.RESISTOR CH 1/10W 56K	3	
R216		ERJ6GEYJ105	M.RESISTOR CH 1/10W 1M	1	
R222-27		ERJ6GEYJ563	M.RESISTOR CH 1/10W 56K	6	
R228		ERJ6GEYJ104	M.RESISTOR CH 1/10W 100K	1	
R229		ERJ6GEYJ223	M.RESISTOR CH 1/10W 22K	1	
R230		ERJ6GEYJ563	M.RESISTOR CH 1/10W 56K	1	
R231		ERJ6GEYJ104	M.RESISTOR CH 1/10W 100K	1	
R232		VRE0034E272	M.RESISTOR CH 1/10W 2.7K	1	
R233		VRE0034E104	M.RESISTOR CH 1/10W 100K	1	
R234		VRE0034E272	M.RESISTOR CH 1/10W 2.7K	1	
R235		VRE0034E104	M.RESISTOR CH 1/10W 100K	1	
R236		ERJ6GEYJ563	M.RESISTOR CH 1/10W 56K	1	
R237		ERJ6GEYJ824	M.RESISTOR CH 1/10W 820K	1	
R238		ERJ6GEYJ102	M.RESISTOR CH 1/10W 1K	1	
R239		ERJ6GEYJ103	M.RESISTOR CH 1/10W 10K	1	
R240		ERJ6GEYJ222	M.RESISTOR CH 1/10W 2.2K	1	
R241		ERJ6GEYJ104	M.RESISTOR CH 1/10W 100K	1	
R242		ERJ6GEYJ334	M.RESISTOR CH 1/10W 330K	1	
R243		ERJ6GEYJ101	M.RESISTOR CH 1/10W 100	1	
R244,45		ERJ6GEYJ103	M.RESISTOR CH 1/10W 10K	2	
R246		ERJ6GEYJ102	M.RESISTOR CH 1/10W 1K	1	
R247		ERJ6GEYJ103	M.RESISTOR CH 1/10W 10K	1	
R248		ERJ6GEYJ562	M.RESISTOR CH 1/10W 5.6K	1	
R249		ERJ6GEYJ392	M.RESISTOR CH 1/10W 3.9K	1	
R250		ERJ6GEYJ184	M.RESISTOR CH 1/10W 180K	1	
R251		ERJ6GEYJ224	M.RESISTOR CH 1/10W 220K	1	

Refer to the P.C.BOARDS LIST, page 6-1-1, before using this page.

Ref.No.	Part No.	Part Name & Description	Pcs	Remarks
R252	ERJ6GEYJ153	M.RESISTOR CH 1/10W 15K	1	
R253	ERJ6GEYJ564	M.RESISTOR CH 1/10W 560K	1	
R254-58	ERJ6GEYJ103	M.RESISTOR CH 1/10W 10K	5	
R259	ERJ6GEYJ223	M.RESISTOR CH 1/10W 22K	1	
R260	ERJ6GEYJ393	M.RESISTOR CH 1/10W 39K	1	
R261	ERJ6GEYJ823	M.RESISTOR CH 1/10W 82K	1	
R262	ERJ6GEYJ123	M.RESISTOR CH 1/10W 12K	1	
R263	ERJ6GEYJ183	M.RESISTOR CH 1/10W 18K	1	
R264	ERJ6GEYJ333	M.RESISTOR CH 1/10W 33K	1	
R265	ERJ6GEYJ683	M.RESISTOR CH 1/10W 68K	1	
R266-69	ERJ6GEYJ563	M.RESISTOR CH 1/10W 56K	4	
R270	ERJ6GEYJ562	M.RESISTOR CH 1/10W 5.6K	1	
R271	ERJ6GEYJ103	M.RESISTOR CH 1/10W 10K	1	
R273	ERJ6GEYJ393	M.RESISTOR CH 1/10W 39K	1	
R274	ERJ6GEYJ181	M.RESISTOR CH 1/10W 180	1	
R275	ERJ6GEYJ563	M.RESISTOR CH 1/10W 56K	1	
R276,77	VRE0034E102	M.RESISTOR CH 1/10W 1K	2	
R278	ERJ6GEYJ472	M.RESISTOR CH 1/10W 4.7K	1	
R279-81	ERJ6GEYJ563	M.RESISTOR CH 1/10W 56K	3	
R282	ERJ6GEYJ124	M.RESISTOR CH 1/10W 120K	1	
R283	ERJ6GEYJ103	M.RESISTOR CH 1/10W 10K	1	
R284	ERJ6GEYJ272	M.RESISTOR CH 1/10W 2.7K	1	
R285	ERJ6GEYJ122	M.RESISTOR CH 1/10W 1.2K	1	
R286,87	ERJ6GEYJ472	M.RESISTOR CH 1/10W 4.7K	2	
R288	ERJ6GEYJ473	M.RESISTOR CH 1/10W 47K	1	
R289	ERJ6GEYJ823	M.RESISTOR CH 1/10W 82K	1	
R301	ERJ6GEYJ563	M.RESISTOR CH 1/10W 56K	1	
R302,03	ERJ6GEYJ103	M.RESISTOR CH 1/10W 10K	2	
R303	ERJ6GEY0R00	M.RESISTOR CH 1/10W 0	1	
R304	ERJ6GEYJ563	M.RESISTOR CH 1/10W 56K	1	
R305	ERJ6GEYJ104	M.RESISTOR CH 1/10W 100K	1	
R306	ERJ6GEYJ683	M.RESISTOR CH 1/10W 68K	1	
R307	ERJ6GEYJ223	M.RESISTOR CH 1/10W 22K	1	
R308	ERJ6GEYJ103	M.RESISTOR CH 1/10W 10K	1	
R309	ERJ6GEYJ472	M.RESISTOR CH 1/10W 4.7K	1	
R310	ERJ6GEYJ822	M.RESISTOR CH 1/10W 8.2K	1	
R311	ERJ6GEYJ392	M.RESISTOR CH 1/10W 3.9K	1	
R312	ERJ6GEYJ153	M.RESISTOR CH 1/10W 15K	1	
R313	ERJ6GEYJ332	M.RESISTOR CH 1/10W 3.3K	1	
R314	ERJ6GEYJ151	M.RESISTOR CH 1/10W 150	1	
R315,16	ERJ6GEYJ103	M.RESISTOR CH 1/10W 10K	2	
R317	ERJ6GEYJ683	M.RESISTOR CH 1/10W 68K	1	
R318	ERJ6GEYJ103	M.RESISTOR CH 1/10W 10K	1	
R319	ERJ6GEYJ273	M.RESISTOR CH 1/10W 27K	1	
R320	ERJ6GEYJ104	M.RESISTOR CH 1/10W 100K	1	
R321	ERJ6GEYJ223	M.RESISTOR CH 1/10W 22K	1	
R322	ERJ6GEYJ563	M.RESISTOR CH 1/10W 56K	1	
R325,26	VRE0034E332	M.RESISTOR CH 1/10W 3.3K	2	
R327	ERJ6GEYJ223	M.RESISTOR CH 1/10W 22K	1	
R328	ERJ6GEYJ104	M.RESISTOR CH 1/10W 100K	1	
R329	ERJ6GEYJ393	M.RESISTOR CH 1/10W 39K	1	
R330	ERJ6GEYJ334	M.RESISTOR CH 1/10W 330K	1	
R331	ERJ6GEYJ474	M.RESISTOR CH 1/10W 470K	1	
R332,33	ERJ6GEYJ104	M.RESISTOR CH 1/10W 100K	2	
R334	ERJ6GEYJ105	M.RESISTOR CH 1/10W 1M	1	
R335	ERJ6GEYJ684	M.RESISTOR CH 1/10W 680K	1	
R337,38	ERJ6GEYJ103	M.RESISTOR CH 1/10W 10K	2	
R339,40	VRE0034E332	M.RESISTOR CH 1/10W 3.3K	2	
R341	ERJ6GEYJ223	M.RESISTOR CH 1/10W 22K	1	
R342	ERJ6GEYJ104	M.RESISTOR CH 1/10W 100K	1	
R343	ERJ6GEYJ473	M.RESISTOR CH 1/10W 47K	1	
R344	ERJ6GEYJ334	M.RESISTOR CH 1/10W 330K	1	
R345	ERJ6GEYJ474	M.RESISTOR CH 1/10W 470K	1	
R346	ERJ6GEYJ104	M.RESISTOR CH 1/10W 100K	1	
R347	ERJ6GEYJ105	M.RESISTOR CH 1/10W 1M	1	
R348	ERJ6GEYJ684	M.RESISTOR CH 1/10W 680K	1	
R349,50	ERJ6GEYJ103	M.RESISTOR CH 1/10W 10K	2	
R351	ERJ6GEYJ472	M.RESISTOR CH 1/10W 4.7K	1	
R352-55	ERJ6GEYJ103	M.RESISTOR CH 1/10W 10K	4	
R356	ERJ6GEYJ222	M.RESISTOR CH 1/10W 2.2K	1	
R357	ERJ6GEYJ223	M.RESISTOR CH 1/10W 22K	1	
R358	ERJ6GEYJ104	M.RESISTOR CH 1/10W 100K	1	
R359,60	ERJ6GEYJ103	M.RESISTOR CH 1/10W 10K	2	
R362,63	ERJ6GEYJ103	M.RESISTOR CH 1/10W 10K	2	
R365	ERJ6GEYJ104	M.RESISTOR CH 1/10W 100K	1	

Ref.No.	Part No.	Part Name & Description	Pcs	Remarks
R366	ERJ6GEYJ103	M.RESISTOR CH 1/10W 10K	1	
R366	ERJ6GEYJ473	M.RESISTOR CH 1/10W 47K	1	
R367,68	ERJ6GEYJ563	M.RESISTOR CH 1/10W 56K	2	
R369	ERJ6GEYJ104	M.RESISTOR CH 1/10W 100K	1	
R370,71	ERJ6GEYJ103	M.RESISTOR CH 1/10W 10K	2	
R373,74	ERJ6GEYJ103	M.RESISTOR CH 1/10W 10K	2	
R376	ERJ6GEYJ104	M.RESISTOR CH 1/10W 100K	1	
R378,79	ERJ6GEYJ563	M.RESISTOR CH 1/10W 56K	2	
R380	ERJ6GEYJ103	M.RESISTOR CH 1/10W 10K	1	
R381	ERJ6GEYJ473	M.RESISTOR CH 1/10W 47K	1	
R382	ERJ6GEYJ683	M.RESISTOR CH 1/10W 68K	1	
R383	ERJ6GEYJ152	M.RESISTOR CH 1/10W 1.5K	1	
R386	ERJ6GEYJ182	M.RESISTOR CH 1/10W 1.8K	1	
R388	ERJ6GEYJ273	M.RESISTOR CH 1/10W 27K	1	
R389	ERJ6GEYJ153	M.RESISTOR CH 1/10W 15K	1	
R390	ERJ6GEYJ273	M.RESISTOR CH 1/10W 27K	1	
R391	ERJ6GEYJ153	M.RESISTOR CH 1/10W 15K	1	
R392,93	ERJ6GEYJ103	M.RESISTOR CH 1/10W 10K	2	
R394,95	VRE0034E102	M.RESISTOR CH 1/10W 1K	2	
R396,97	VRE0034E472	M.RESISTOR CH 1/10W 4.7K	2	
R398	ERJ6GEYJ183	M.RESISTOR CH 1/10W 18K	1	
R424	ERJ6GEYJ222	M.RESISTOR CH 1/10W 2.2K	1	
R427	ERJ6GEYJ333	M.RESISTOR CH 1/10W 33K	1	
R428	ERJ6GEYJ223	M.RESISTOR CH 1/10W 22K	1	
R432,33	ERJ6GEYJ393	M.RESISTOR CH 1/10W 39K	2	
R434	ERJ6GEYJ331	M.RESISTOR CH 1/10W 330	1	
R435	ERJ6GEYJ103	M.RESISTOR CH 1/10W 10K	1	
R437	ERJ6GEYJ684	M.RESISTOR CH 1/10W 680K	1	
R440	ERJ6GEYJ562	M.RESISTOR CH 1/10W 5.6K	1	
R441,42	ERJ6GEYJ105	M.RESISTOR CH 1/10W 1M	2	
R443	ERJ6GEYJ223	M.RESISTOR CH 1/10W 22K	1	
R445	ERJ6GEY0R00	M.RESISTOR CH 1/10W 0	1	
R446,47	ERJ6GEYJ562	M.RESISTOR CH 1/10W 5.6K	2	
R448	ERJ6GEYG105	M.RESISTOR CH 1/10W 1M	1	
R449	ERJ6GEYJ105	M.RESISTOR CH 1/10W 1M	1	
R460	ERJ6GEYJ103	M.RESISTOR CH 1/10W 10K	1	
R461	ERJ6GEYG103	M.RESISTOR CH 1/10W 10K	1	
R462	ERJ6GEYJ223	M.RESISTOR CH 1/10W 22K	1	
R463	ERJ6GEYJ331	M.RESISTOR CH 1/10W 330	1	
R464	ERJ6GEY0R00	M.RESISTOR CH 1/10W 0	1	
R465	ERJ6GEYJ223	M.RESISTOR CH 1/10W 22K	1	
R466	ERJ6GEYG103	M.RESISTOR CH 1/10W 10K	1	
R467	ERJ6GEYJ473	M.RESISTOR CH 1/10W 47K	1	
R469	ERJ6GEYJ564	M.RESISTOR CH 1/10W 560K	1	
R470	ERJ6GEYJ394	M.RESISTOR CH 1/10W 390K	1	
R477	ERJ6GEYJ562	M.RESISTOR CH 1/10W 5.6K	1	
R501	ERJ6GEYJ102	M.RESISTOR CH 1/10W 1K	1	
R502	ERJ6GEYJ103	M.RESISTOR CH 1/10W 10K	1	
R503	ERJ6GEYJ102	M.RESISTOR CH 1/10W 1K	1	
R504-07	ERJ6GEYJ821	M.RESISTOR CH 1/10W 820	4	
R508	ERJ6GEYJ473	M.RESISTOR CH 1/10W 47K	1	
R509-12	ERJ6GEYJ391	M.RESISTOR CH 1/10W 390	4	
R513	ERJ6GEYJ103	M.RESISTOR CH 1/10W 10K	1	
R514	ERJ6GEYJ224	M.RESISTOR CH 1/10W 220K	1	
R515	ERJ6GEYJ273	M.RESISTOR CH 1/10W 27K	1	
R516	ERJ6GEYJ103	M.RESISTOR CH 1/10W 10K	1	
R517	ERJ6GEYJ272	M.RESISTOR CH 1/10W 2.7K	1	
R518	ERJ6GEYJ104	M.RESISTOR CH 1/10W 100K	1	
R519	ERJ6GEYJ392	M.RESISTOR CH 1/10W 3.9K	1	
R520	ERJ6GEYJ333	M.RESISTOR CH 1/10W 33K	1	
R521,22	ERJ6GEYJ224	M.RESISTOR CH 1/10W 220K	2	
R523	ERX12SJR47	M.RESISTOR 1/2W 0.47	1	
R524	ERJ6GEYJ273	M.RESISTOR CH 1/10W 27K	1	
R525	ERJ6GEYJ272	M.RESISTOR CH 1/10W 2.7K	1	
R526	ERJ6GEYJ103	M.RESISTOR CH 1/10W 10K	1	
R527	ERJ6GEYJ104	M.RESISTOR CH 1/10W 100K	1	
R528	ERJ6GEYJ224	M.RESISTOR CH 1/10W 220K	1	
R529	ERJ6GEYJ392	M.RESISTOR CH 1/10W 3.9K	1	
R530	ERJ6GEYJ223	M.RESISTOR CH 1/10W 22K	1	
R531	ERJ6GEYJ224	M.RESISTOR CH 1/10W 220K	1	
R532	ERX12SJR68	M.RESISTOR 1/2W 0.68	1	
R533	ERJ6GEYJ224	M.RESISTOR CH 1/10W 220K	1	
R534	ERJ6GEYJ273	M.RESISTOR CH 1/10W 27K	1	
R535	ERJ6GEYJ103	M.RESISTOR CH 1/10W 10K	1	
R536	ERJ6GEYJ104	M.RESISTOR CH 1/10W 100K	1	

Refer to the P.C.BOARDS LIST, page 6-1-1, before using this page.

Ref.No.	Part No.	Part Name & Description	Pcs	Remarks
R537	ERX12SJR47	M.RESISTOR 1/2W 0.47	1	
R538-40	ERJ6GEYJ224	M.RESISTOR CH 1/10W 220K	3	
R541	ERJ6GEYJ272	M.RESISTOR CH 1/10W 2.7K	1	
R542	ERJ6GEYJ223	M.RESISTOR CH 1/10W 22K	1	
R543	ERJ6GEYJ273	M.RESISTOR CH 1/10W 27K	1	
R544	ERJ6GEYJ104	M.RESISTOR CH 1/10W 100K	1	
R545	ERJ6GEYJ103	M.RESISTOR CH 1/10W 10K	1	
R546	ERX12SJR47	M.RESISTOR 1/2W 0.47	1	
R547-49	ERJ6GEYJ224	M.RESISTOR CH 1/10W 220K	3	
R550	ERJ6GEYJ272	M.RESISTOR CH 1/10W 2.7K	1	
R551	ERJ6GEYJ223	M.RESISTOR CH 1/10W 22K	1	
R553	ERJ6GEY0R00	M.RESISTOR CH 1/10W 0	1	
R554	ERJ6GEYJ272	M.RESISTOR CH 1/10W 2.7K	1	
R555-57	ERJ6GEY0R00	M.RESISTOR CH 1/10W 0	3	
R600	ERJ6GEYJ271	M.RESISTOR CH 1/10W 270	1	
R601	ERJ6GEYJ105	M.RESISTOR CH 1/10W 1M	1	
R603	ERJ6GEYJ271	M.RESISTOR CH 1/10W 270	1	
R604	ERJ6GEYJ105	M.RESISTOR CH 1/10W 1M	1	
R700	ERJ6GEYJ103	M.RESISTOR CH 1/10W 10K	1	
R701	ERJ6GEYJ473	M.RESISTOR CH 1/10W 47K	1	
R702	ERJ6GEYJ103	M.RESISTOR CH 1/10W 10K	1	
R703	ERJ6GEYJ473	M.RESISTOR CH 1/10W 47K	1	
R704	ERJ6GEYJ103	M.RESISTOR CH 1/10W 10K	1	
R705	ERJ6GEYJ183	M.RESISTOR CH 1/10W 18K	1	
R706	ERJ6GEYJ473	M.RESISTOR CH 1/10W 47K	1	
R707	ERJ6GEYJ474	M.RESISTOR CH 1/10W 470K	1	
R708	ERJ6GEYJ331	M.RESISTOR CH 1/10W 330	1	
R709	ERJ6GEYJ102	M.RESISTOR CH 1/10W 1K	1	
R710	ERJ6GEYJ392	M.RESISTOR CH 1/10W 3.9K	1	
R711	ERJ6GEYJ393	M.RESISTOR CH 1/10W 39K	1	
R712	ERJ6GEYJ102	M.RESISTOR CH 1/10W 1K	1	
R713,14	ERJ6GEYG332	M.RESISTOR CH 1/10W 3.3K	2	
R715	ERJ6GEYG222	M.RESISTOR CH 1/10W 2.2K	1	
R716,17	ERJ6GEYJ332	M.RESISTOR CH 1/10W 3.3K	2	
R718	ERJ6GEYJ103	M.RESISTOR CH 1/10W 10K	1	
R719-26	ERJ6GEYG273	M.RESISTOR CH 1/10W 27K	8	
R727-40	ERJ6GEYJ473	M.RESISTOR CH 1/10W 47K	14	
R741	ERJ6GEYJ103	M.RESISTOR CH 1/10W 10K	1	
R742,43	ERJ6GEYJ473	M.RESISTOR CH 1/10W 47K	2	
R744	ERJ6GEYJ103	M.RESISTOR CH 1/10W 10K	1	
R746-50	ERJ6GEYJ103	M.RESISTOR CH 1/10W 10K	5	
R751	ERJ6GEYJ272	M.RESISTOR CH 1/10W 2.7K	1	
R752-54	ERJ6GEYJ561	M.RESISTOR CH 1/10W 560	3	
R755	ERJ6GEYJ223	M.RESISTOR CH 1/10W 22K	1	
R756-58	ERJ6GEYG273	M.RESISTOR CH 1/10W 27K	3	
R759	ERJ6GEYG823	M.RESISTOR CH 1/10W 82K	1	
R760	ERJ6GEYG682	M.REISITOR CH 1/10W 6.8K	1	
R761	ERJ6GEYG153	M.RESISTOR CH 1/10W 15K	1	
R762	ERJ6GEYG124	M.RESISTOR CH 1/10W 120K	1	
R763	ERJ6GEYJ394	M.RESISTOR CH 1/10W 390K	1	
R764	ERJ6GEYJ124	M.RESISTOR CH 1/10W 120K	1	
R765	ERJ6GEYJ394	M.RESISTOR CH 1/10W 390K	1	
R766,67	ERJ6GEYJ273	M.RESISTOR CH 1/10W 27K	2	
R768	ERJ6GEYG182	M.RESISTOR CH 1/10W 1.8K	1	
R769	ERJ6GEYJ154	M.RESISTOR CH 1/10W 150K	1	
R770	ERJ6GEYJ393	M.RESISTOR CH 1/10W 39K	1	
R771	ERJ6GEYG682	M.REISITOR CH 1/10W 6.8K	1	
R772-74	ERJ6GEYG273	M.RESISTOR CH 1/10W 27K	3	
R775	ERJ6GEYG823	M.RESISTOR CH 1/10W 82K	1	
R776	ERJ6GEYG682	M.REISITOR CH 1/10W 6.8K	1	
R777,78	ERJ6GEYG564	M.RESISTOR CH 1/10W 560K	2	
R779	ERJ6GEYJ564	M.RESISTOR CH 1/10W 560K	1	
R780,81	ERJ6GEYG333	M.RESISTOR CH 1/10W 33K	2	
R782	ERJ6GEYJ564	M.RESISTOR CH 1/10W 560K	1	
R783	ERJ6GEYG153	M.RESISTOR CH 1/10W 15K	1	
R784	ERJ6GEYG124	M.RESISTOR CH 1/10W 120K	1	
R785	ERJ6GEYJ124	M.RESISTOR CH 1/10W 120K	1	
R786,87	ERJ6GEYJ394	M.RESISTOR CH 1/10W 390K	2	
R788,89	ERJ6GEYJ273	M.RESISTOR CH 1/10W 27K	2	
R790	ERJ6GEYG182	M.RESISTOR CH 1/10W 1.8K	1	
R791	ERJ6GEYJ154	M.RESISTOR CH 1/10W 150K	1	
R792	ERJ6GEYJ393	M.RESISTOR CH 1/10W 39K	1	
R793	ERJ6GEYG682	M.REISITOR CH 1/10W 6.8K	1	
R794,95	ERJ6GEYG273	M.RESISTOR CH 1/10W 27K	2	
R796	ERJ6GEYJ123	M.RESISTOR CH 1/10W 12K	1	

Ref.No.	Part No.	Part Name & Description	Pcs	Remarks
R797,98	ERJ6GEYJ104	M.RESISTOR CH 1/10W 100K	2	
R799	ERJ6GEYJ393	M.RESISTOR CH 1/10W 39K	1	
R800	ERJ6GEYJ103	M.RESISTOR CH 1/10W 10K	1	
R801,02	VRE0034E103	M.RESISTOR CH 1/10W 10K	2	
R803	ERJ6GEYJ474	M.RESISTOR CH 1/10W 470K	1	
R804,05	ERJ6GEYJ224	M.RESISTOR CH 1/10W 220K	2	
R806	ERJ6GEYJ272	M.RESISTOR CH 1/10W 2.7K	1	
R807	ERJ6GEYJ224	M.RESISTOR CH 1/10W 220K	1	
R808	ERJ6GEYJ272	M.RESISTOR CH 1/10W 2.7K	1	
R809	ERJ6GEYJ103	M.RESISTOR CH 1/10W 10K	1	
R810,11	VRE0034E103	M.RESISTOR CH 1/10W 10K	2	
R812	ERJ6GEYJ474	M.RESISTOR CH 1/10W 470K	1	
R813,14	ERJ6GEYJ224	M.RESISTOR CH 1/10W 220K	2	
R815	ERJ6GEYJ272	M.RESISTOR CH 1/10W 2.7K	1	
R816	ERJ6GEYJ224	M.RESISTOR CH 1/10W 220K	1	
R817	ERJ6GEYJ272	M.RESISTOR CH 1/10W 2.7K	1	
RA700,01	VCR0202	RESISTOR ARRAY	2	
RA702	EXBLD8103G	COMBI.R-R 10K	1	
SW1,W2	VSR0032	VOLTAGE SELECT SWITCH	2	
SW700	VSS0207	SWITCH	1	
TP3-P7	VJR0646	TEST POINT	5	
TP13	VJR0646	TEST POINT	1	
TP15-17	VJR0646	TEST POINT	3	
TP19,20	VJR0646	TEST POINT	2	
TP102-05	VJR0646	TEST POINT	4	
TP108-18	VJR0646	TEST POINT	11	
TP201,02	VJR0646	TEST POINT	2	
TP302-04	VJR0646	TEST POINT	3	
TP306	VJR0646	TEST POINT	1	
TP309-12	VJR0646	TEST POINT	4	
TP700-14	VJR0646	TEST POINT	15	
TPG1-G3	VJR0646	TEST POINT	3	
VC101	ECV1ZW30X53	V.CAPACITOR 30P	1	
VR1	VRV0109B503	V.RESISTOR 50K	1	
VR3	VRV0109B503	V.RESISTOR 50K	1	
VR101	VRV0109B203	V.RESISTOR 20K	1	
VR102	VRV0109B103	V.RESISTOR 10K	1	
VR103	VRV0109B203	V.RESISTOR 20K	1	
VR104	VRV0109B502	V.RESISTOR 5K	1	
VR105	VRV0109B104	V.RESISTOR 100K	1	
VR301	VRV0109B502	V.RESISTOR 5K	1	
VR302,03	VRV0109B202	V.RESISTOR 2K	2	
VR304-07	VRV0109B503	V.RESISTOR 50K	4	
VR308	VRV0109B202	V.RESISTOR 2K	1	
VR309	VRV0109B503	V.RESISTOR 50K	1	
VR700	VRV0109B202	V.RESISTOR 2K	1	
VR701	VRV0109B103	V.RESISTOR 10K	1	
VR702,03	VRV0064B503	V.RESISTOR 50K	2	
VR704-07	VRV0064B203	V.RESISTOR 20K	4	
VR708,09	VRV0109B102	V.RESISTOR 1K	2	
X101	VSX0217	CRYSTAL OSCILLATOR	1	
X501	VSX0136	CRYSTAL OSCILLATOR	1	
X600	VSX0126	CRYSTAL OSCILLATOR	1	
X601	VSX0086	CRYSTAL OSCILLATOR	1	
X700	VSX0257	CRYSTAL OSCILLATOR	1	

Refer to the P.C.BOARDS LIST, page 6-1-1, before using this page.

Ref.No.		Part No.	Part Name & Description	Pcs	Remarks
			MISCELLANEOUS		
		VML2143	CARD PULLER	1	
		VML2144	CARD PULLER	1	
		VMS4174	PIN	6	
		VMZ1091	BARRIER	1	
		VMZ1547	BARRIER	1	
		VSC2286	SHIELD CASE	1	
		VSC3056	SHIELD CASE	1	
		VXA3966	P.C.B. SHIELD PLATE	1	
		XNG26E	NUT	4	
		XYNV3+K6FR	SCREW	6	
		XYN26+C12	SCREW	4	

Refer to the P.C.BOARDS LIST, page 6-1-1, before using this page.

Ref.No.		Part No.	Part Name & Description	Pcs	Remarks
	■	VEP84095A	P.C.BOARD W/COMPONENT		FOR AU-65-P
			W6 AUDIO		
			CAPACITORS		
C1,C2		ECEA1CU470	E.CAPACITOR 16V 47U	2	
C3		ECEA0JU101	E.CAPACITOR 6.3V 100U	1	
C4		ECUM1E104ZFN	C.CAPACITOR CH 25V 0.1U	1	
C5		ECEA1CU100	E.CAPACITOR 16V 10U	1	
C6		ECUM1E473KBN	C.CAPACITOR CH 25V 0.047U	1	
C7		ECUM1H222KBN	C.CAPACITOR CH 50V 2200P	1	
C8		ECUM1E104ZFN	C.CAPACITOR CH 25V 0.1U	1	
C9		ECEA1CU100	E.CAPACITOR 16V 10U	1	
C10		ECEA1CN100S	E.CAPACITOR 16V 10U	1	
C11		ECUM1H122KBN	C.CAPACITOR CH 50V 1200P	1	
C12		ECEA1CU100	E.CAPACITOR 16V 10U	1	
C13,14		ECEA1CU470	E.CAPACITOR 16V 47U	2	
C17		ECUM1H822KBN	C.CAPACITOR CH 50V 8200P	1	
C101		ECUM1H220JCN	C.CAPACITOR CH 50V 22P	1	
C102		ECEA1CBZ100	E.CAPACITOR 16V 10U	1	
C103		ECUM1H470JCN	C.CAPACITOR CH 50V 47P	1	
C104		ECEA1CBZ100	E.CAPACITOR 16V 10U	1	
C105		ECEA1CPZ470	E.CAPACITOR 16V 47U	1	
C106		ECUM1H470JCN	C.CAPACITOR CH 50V 47P	1	
C107		ECUM1E104ZFN	C.CAPACITOR CH 25V 0.1U	1	
C108		ECEA1CPZ101	E.CAPACITOR 16V 100U	1	
C109		ECEA1CBZ470	E.CAPACITOR 16V 47U	1	
C110		ECEA1CPZ101	E.CAPACITOR 16V 100U	1	
C111		ECUM1E104ZFN	C.CAPACITOR CH 25V 0.1U	1	
C112,13		ECEA1CPZ101	E.CAPACITOR 16V 100U	2	
C114		ECEA1CBZ100	E.CAPACITOR 16V 10U	1	
C115		ECUM1H220JCN	C.CAPACITOR CH 50V 22P	1	
C116,17		ECEA1CBZ100	E.CAPACITOR 16V 10U	2	
C118		ECEA1CPZ470	E.CAPACITOR 16V 47U	1	
C120		ECUM1H470JCN	C.CAPACITOR CH 50V 47P	1	
C121		ECUM1H820JCN	C.CAPACITOR CH 50V 82P	1	
C122		ECUM1H151JCN	C.CAPACITOR CH 50V 150P	1	
C124		ECUM1H470JCN	C.CAPACITOR CH 50V 47P	1	
C125		ECEA0JPZ471	E.CAPACITOR 6.3V 470U	1	
C127,28		ECEA1CPZ470	E.CAPACITOR 16V 47U	2	
C129		ECQM1H473JF	P.CAPACITOR 50V 0.047U	1	
C130		ECUM1H331JCN	C.CAPACITOR CH 50V 330P	1	
C131,32		ECEA1CPZ470	E.CAPACITOR 16V 47U	2	
C133		ECUM1H562KBN	C.CAPACITOR CH 50V 5600P	1	
C134,35		ECEA1CBZ100	E.CAPACITOR 16V 10U	2	
C136		ECQP1H472FZ	P.CAPACITOR 50V 4700P	1	
C137		ECEA1CPZ100	E.CAPACITOR 16V 10U	1	
C138		ECQM1H473JF	P.CAPACITOR 50V 0.047U	1	
C139		ECEA1HPZR22	E.CAPACITOR 50V 0.22U	1	
C140,41		ECEA1HPZR68	E.CAPACITOR 50V 0.98U	2	
C142		ECEA1HPZR22	E.CAPACITOR 50V 0.22U	1	
C143		ECQM1H473JF	P.CAPACITOR 50V 0.047U	1	
C144		ECEA1CPZ100	E.CAPACITOR 16V 10U	1	
C145		ECQP1H472FZ	P.CAPACITOR 50V 4700P	1	
C146		ECEA1CBZ100	E.CAPACITOR 16V 10U	1	
C147		ECQP1H103FZ	P.CAPACITOR 50V 0.01U	1	
C148,49		ECQM1H394JF	P.CAPACITOR 50V 0.39U	2	
C201		ECUM1H391JCN	C.CAPACITOR CH 50V 390P	1	
C202		ECEA1CBZ100	E.CAPACITOR 16V 10U	1	
C203		ECUM1H272KBN	C.CAPACITOR CH 50V 2700P	1	
C204,05		ECEA1CBZ100	E.CAPACITOR 16V 10U	2	
C206		ECEA1CBZ470	E.CAPACITOR 16V 47U	1	
C207		ECUM1H682KBN	C.CAPACITOR CH 50V 6800P	1	
C208		ECQM1H473JF	P.CAPACITOR 50V 0.047U	1	
C209		ECEA1CBZ100	E.CAPACITOR 16V 10U	1	
C210		ECQM1H394JF	P.CAPACITOR 50V 0.39U	1	
C211		ECUM1H222KBN	C.CAPACITOR CH 50V 2200P	1	
C212		ECUM1H472KBN	C.CAPACITOR CH 50V 4700P	1	
C213		ECUM1H682KBN	C.CAPACITOR CH 50V 6800P	1	

Ref.No.		Part No.	Part Name & Description	Pcs	Remarks
C214		ECUM1H103KBN	C.CAPACITOR CH 50V 0.01U	1	
C215		ECUM1E153KBN	C.CAPACITOR CH 25V 0.015U	1	
C216		ECEA1CBZ100	E.CAPACITOR 16V 10U	1	
C217		ECUM1H152KBN	C.CAPACITOR CH 50V 1500P	1	
C218		ECUM1H122KBN	C.CAPACITOR CH 50V 1200P	1	
C219		ECUM1H152KBN	C.CAPACITOR CH 50V 1500P	1	
C220		ECUM1H102KBN	C.CAPACITOR CH 50V 1000P	1	
C301		ECUM1H220JCN	C.CAPACITOR CH 50V 22P	1	
C302		ECEA1CBZ100	E.CAPACITOR 16V 10U	1	
C303		ECUM1H470JCN	C.CAPACITOR CH 50V 47P	1	
C304		ECEA1CBZ100	E.CAPACITOR 16V 10U	1	
C305		ECEA1CPZ470	E.CAPACITOR 16V 47U	1	
C306		ECUM1H470JCN	C.CAPACITOR CH 50V 47P	1	
C307		ECUM1E104ZFN	C.CAPACITOR CH 25V 0.1U	1	
C308		ECEA1CPZ101	E.CAPACITOR 16V 100U	1	
C309		ECEA1CBZ470	E.CAPACITOR 16V 47U	1	
C310		ECEA1CPZ101	E.CAPACITOR 16V 100U	1	
C311		ECUM1E104ZFN	C.CAPACITOR CH 25V 0.1U	1	
C312,13		ECEA1CPZ101	E.CAPACITOR 16V 100U	2	
C314		ECEA1CBZ100	E.CAPACITOR 16V 10U	1	
C315		ECUM1H220JCN	C.CAPACITOR CH 50V 22P	1	
C316,17		ECEA1CBZ100	E.CAPACITOR 16V 10U	2	
C318		ECEA1CPZ470	E.CAPACITOR 16V 47U	1	
C320		ECUM1H470JCN	C.CAPACITOR CH 50V 47P	1	
C321		ECUM1H820JCN	C.CAPACITOR CH 50V 82P	1	
C322		ECUM1H151JCN	C.CAPACITOR CH 50V 150P	1	
C324		ECUM1H470JCN	C.CAPACITOR CH 50V 47P	1	
C325		ECEA0JPZ471	E.CAPACITOR 6.3V 470U	1	
C327,28		ECEA1CPZ470	E.CAPACITOR 16V 47U	2	
C329		ECQM1H473JF	P.CAPACITOR 50V 0.047U	1	
C330		ECUM1H331JCN	C.CAPACITOR CH 50V 330P	1	
C331,32		ECEA1CPZ470	E.CAPACITOR 16V 47U	2	
C333		ECUM1H562KBN	C.CAPACITOR CH 50V 5600P	1	
C334,35		ECEA1CBZ100	E.CAPACITOR 16V 10U	2	
C336		ECQP1H472FZ	P.CAPACITOR 50V 4700P	1	
C337		ECEA1CPZ100	E.CAPACITOR 16V 10U	1	
C338		ECQM1H473JF	P.CAPACITOR 50V 0.047U	1	
C339		ECEA1HPZR22	E.CAPACITOR 50V 0.22U	1	
C340,41		ECEA1HPZR68	E.CAPACITOR 50V 0.98U	2	
C342		ECEA1HPZR22	E.CAPACITOR 50V 0.22U	1	
C343		ECQM1H473JF	P.CAPACITOR 50V 0.047U	1	
C344		ECEA1CPZ100	E.CAPACITOR 16V 10U	1	
C345		ECQP1H472FZ	P.CAPACITOR 50V 4700P	1	
C346		ECEA1CBZ100	E.CAPACITOR 16V 10U	1	
C347		ECQP1H103FZ	P.CAPACITOR 50V 0.01U	1	
C348,49		ECQM1H394JF	P.CAPACITOR 50V 0.39U	2	
C401		ECUM1H391JCN	C.CAPACITOR CH 50V 390P	1	
C402		ECEA1CBZ100	E.CAPACITOR 16V 10U	1	
C403		ECUM1H272KBN	C.CAPACITOR CH 50V 2700P	1	
C404,05		ECEA1CBZ100	E.CAPACITOR 16V 10U	2	
C406		ECEA1CBZ470	E.CAPACITOR 16V 47U	1	
C407		ECUM1H682KBN	C.CAPACITOR CH 50V 6800P	1	
C408		ECQM1H473JF	P.CAPACITOR 50V 0.047U	1	
C409		ECEA1CBZ100	E.CAPACITOR 16V 10U	1	
C410		ECQM1H394JF	P.CAPACITOR 50V 0.39U	1	
C411		ECUM1H222KBN	C.CAPACITOR CH 50V 2200P	1	
C412		ECUM1H472KBN	C.CAPACITOR CH 50V 4700P	1	
C413		ECUM1H682KBN	C.CAPACITOR CH 50V 6800P	1	
C414		ECUM1H103KBN	C.CAPACITOR CH 50V 0.01U	1	
C415		ECUM1E153KBN	C.CAPACITOR CH 25V 0.015U	1	
C416		ECEA1CBZ100	E.CAPACITOR 16V 10U	1	
C417		ECUM1H152KBN	C.CAPACITOR CH 50V 1500P	1	
C418		ECUM1H122KBN	C.CAPACITOR CH 50V 1200P	1	
C419		ECUM1H152KBN	C.CAPACITOR CH 50V 1500P	1	
C420		ECUM1H102KBN	C.CAPACITOR CH 50V 1000P	1	
C501		ECEA1CU101	E.CAPACITOR 16V 100U	1	
C503		ECEA1CU220	E.CAPACITOR 16V 22U	1	
C551		ECUM1E104ZFN	C.CAPACITOR CH 25V 0.1U	1	
C553		ECEA1AU101	E.CAPACITOR 10V 100U	1	
C554,55		ECUM1E104ZFN	C.CAPACITOR CH 25V 0.1U	2	
C556		ECEA1VU101	E.CAPACITOR 35V 100U	1	
C557		ECEA1EU101	E.CAPACITOR 25V 100U	1	
C558		ECQM1H104JF	P.CAPACITOR 50V 0.1U	1	
C559,60		ECUM1H103KBN	C.CAPACITOR CH 50V 0.01U	2	
C561		ECEA1EU100	E.CAPACITOR 25V 10U	1	

Refer to the P.C.BOARDS LIST, page 6-1-1, before using this page.

Ref.No.		Part No.	Part Name & Description	Pcs	Remarks
C562		ECCD2H181J	C.CAPACITOR 500V 180P	1	
C563		ECCD2H271J	C.CAPACITOR 500V 270P	1	
C564		ECQM1H104JF	P.CAPACITOR 50V 0.1U	1	
C565,66		ECUM1H103KBN	C.CAPACITOR CH 50V 0.01U	2	
C567		ECEA1EU100	E.CAPACITOR 25V 10U	1	
C568		ECCD2H181J	C.CAPACITOR 500V 180P	1	
C569		ECCD2H271J	C.CAPACITOR 500V 270P	1	
C570		ECQM1H104JF	P.CAPACITOR 50V 0.1U	1	
C571-73		ECUM1H103KBN	C.CAPACITOR CH 50V 0.01U	3	
C574		ECEA1EU100	E.CAPACITOR 25V 10U	1	
C575		ECQM1H104JF	P.CAPACITOR 50V 0.1U	1	
C576		VCF2JAB182JE	P.CAPACITOR V	1	
C577		ECQM1H104JF	P.CAPACITOR 50V 0.1U	1	
C578-80		ECUM1H103KBN	C.CAPACITOR CH 50V 0.01U	3	
C581		ECEA1EU100	E.CAPACITOR 25V 10U	1	
C582		ECQM1H104JF	P.CAPACITOR 50V 0.1U	1	
C583		VCF2JAB182JE	P.CAPACITOR V	1	
C584		ECQM1H104JF	P.CAPACITOR 50V 0.1U	1	
C585,86		ECUM1H103KBN	C.CAPACITOR CH 50V 0.01U	2	
C587		ECEA1EU100	E.CAPACITOR 25V 10U	1	
C588		VCF2JAB102JE	P.CAPACITOR V	1	
C589		ECCD2H680K	C.CAPACITOR 500V 68P	1	
C590		ECEA1AU470	E.CAPACITOR 10V 47U	1	
C591		ECQM1H104JF	P.CAPACITOR 50V 0.1U	1	
C592-94		ECUM1H103KBN	C.CAPACITOR CH 50V 0.01U	3	
C595		ECEA1EU100	E.CAPACITOR 25V 10U	1	
C596		VCF2JAB222JE	P.CAPACITOR V	1	
C597		ECUM1E104ZFN	C.CAPACITOR CH 25V 0.1U	1	
C598,99		ECUM1H103KBN	C.CAPACITOR CH 50V 0.01U	2	
C600		ECEA1EU100	E.CAPACITOR 25V 10U	1	
C601		VCF2JAB222JE	P.CAPACITOR V	1	
C602		ECUM1E104ZFN	C.CAPACITOR CH 25V 0.1U	1	
C603,04		ECUM1H103KBN	C.CAPACITOR CH 50V 0.01U	2	
C605		ECEA1EU100	E.CAPACITOR 25V 10U	1	
C606		VCF2JAB222JE	P.CAPACITOR V	1	
C607,08		ECUM1H330JCN	C.CAPACITOR CH 50V 33P	2	
C609		ECEA1HU3R3	E.CAPACITOR 50V 3.3U	1	
C610-12		ECUM1H102KBN	C.CAPACITOR CH 50V 1000P	3	
C701		ECEA1CBZ470	E.CAPACITOR 16V 47U	1	
C702		ECUM1H182KBN	C.CAPACITOR CH 50V 1800P	1	
C703		ECUM1H821JCN	C.CAPACITOR CH 50V 820P	1	
C712		ECEA1HPZ4R7	E.CAPACITOR 50V 4.7U	1	
C713		ECEA1HPZ3R3	E.CAPACITOR 50V 3.3U	1	
C714		ECQM1H682JF	P.CAPACITOR 50V 6800P	1	
C715		ECQM1H102JF	P.CAPACITOR 50V 1000P	1	
C716		ECQM1H223JF	P.CAPACITOR 50V 0.022U	1	
C717		ECEA1CPZ100	E.CAPACITOR 16V 10U	1	
C719		ECEA1HPZ4R7	E.CAPACITOR 50V 4.7U	1	
C720		ECEA1CPZ470	E.CAPACITOR 16V 47U	1	
C721		ECQM1H103JF	P.CAPACITOR 50V 0.01U	1	
C722		ECQM1H392JF	P.CAPACITOR 50V 3900P	1	
C723		ECUM1H272KBN	C.CAPACITOR CH 50V 2700P	1	
C724,25		ECUM1H102KBN	C.CAPACITOR CH 50V 1000P	2	
C726		ECEA1CBZ100	E.CAPACITOR 16V 10U	1	
C727		ECEA1CPZ101	E.CAPACITOR 16V 100U	1	
C728		ECUM1E104ZFN	C.CAPACITOR CH 25V 0.1U	1	
C729,30		ECUM1H103KBN	C.CAPACITOR CH 50V 0.01U	2	
C731		ECEA1HPZ4R7	E.CAPACITOR 50V 4.7U	1	
C732		ECQM1H223JF	P.CAPACITOR 50V 0.022U	1	
C733		ECUM1H122KBN	C.CAPACITOR CH 50V 1200P	1	
C801		ECEA1CBZ470	E.CAPACITOR 16V 47U	1	
C802		ECUM1H182KBN	C.CAPACITOR CH 50V 1800P	1	
C803		ECUM1H821JCN	C.CAPACITOR CH 50V 820P	1	
C804,05		ECUM1H222KBN	C.CAPACITOR CH 50V 2200P	2	
C812		ECEA1HPZ4R7	E.CAPACITOR 50V 4.7U	1	
C813		ECEA1HPZ3R3	E.CAPACITOR 50V 3.3U	1	
C814		ECQM1H682JF	P.CAPACITOR 50V 6800P	1	
C815		ECQM1H102JF	P.CAPACITOR 50V 1000P	1	
C816		ECQM1H223JF	P.CAPACITOR 50V 0.022U	1	
C817		ECEA1CPZ100	E.CAPACITOR 16V 10U	1	
C819		ECEA1HPZ4R7	E.CAPACITOR 50V 4.7U	1	
C820		ECEA1CPZ470	E.CAPACITOR 16V 47U	1	
C821		ECQM1H103JF	P.CAPACITOR 50V 0.01U	1	
C822		ECQM1H392JF	P.CAPACITOR 50V 3900P	1	
C823		ECUM1H272KBN	C.CAPACITOR CH 50V 2700P	1	

Ref.No.		Part No.	Part Name & Description	Pcs	Remarks
C824,25		ECUM1H102KBN	C.CAPACITOR CH 50V 1000P	2	
C826		ECEA1CBZ100	E.CAPACITOR 16V 10U	1	
C827		ECEA1CPZ101	E.CAPACITOR 16V 100U	1	
C828		ECUM1E104ZFN	C.CAPACITOR CH 25V 0.1U	1	
C829,30		ECUM1H103KBN	C.CAPACITOR CH 50V 0.01U	2	
C831		ECEA1HPZ4R7	E.CAPACITOR 50V 4.7U	1	
C832		ECQM1H223JF	P.CAPACITOR 50V 0.022U	1	
C833		ECUM1H122KBN	C.CAPACITOR CH 50V 1200P	1	
C902		ECEA1AU470	E.CAPACITOR 10V 47U	1	
C903		ECUM1E104ZFN	C.CAPACITOR CH 25V 0.1U	1	
C904		ECEA1CPZ101	E.CAPACITOR 16V 100U	1	
C905		ECUM1E104ZFN	C.CAPACITOR CH 25V 0.1U	1	
C906,07		ECEA1CPZ101	E.CAPACITOR 16V 100U	2	
C908		ECUM1E104ZFN	C.CAPACITOR CH 25V 0.1U	1	
C909		ECEA1CPZ101	E.CAPACITOR 16V 100U	1	
C910-12		ECUM1H101JCN	C.CAPACITOR CH 50V 100P	3	
C913-15		ECUM1H151JCN	C.CAPACITOR CH 50V 150P	3	
C916		ECUM1H103KBN	C.CAPACITOR CH 50V 0.01U	1	
C917		ECEA1CPZ100	E.CAPACITOR 16V 10U	1	
C918		ECUM1E104ZFN	C.CAPACITOR CH 25V 0.1U	1	
C920		ECUM1H151JCN	C.CAPACITOR CH 50V 150P	1	
C921,22		ECUM1H103KBN	C.CAPACITOR CH 50V 0.01U	2	
C923		ECUM1H331JCN	C.CAPACITOR CH 50V 330P	1	
C924		ECEA1HPZ010	E.CAPACITOR 50V 1U	1	
C925		ECQM1H223JF	P.CAPACITOR 50V 0.022U	1	
C926		ECUM1H103KBN	C.CAPACITOR CH 50V 0.01U	1	
C929		ECUM1H151JCN	C.CAPACITOR CH 50V 150P	1	
C930,31		ECUM1H103KBN	C.CAPACITOR CH 50V 0.01U	2	
C932		ECUM1H271JCN	C.CAPACITOR CH 50V 270P	1	
C933		ECUM1H391JCN	C.CAPACITOR CH 50V 390P	1	
C934,35		ECUM1H103KBN	C.CAPACITOR CH 50V 0.01U	2	
C936		ECEA1CU100	E.CAPACITOR 16V 10U	1	
C937		ECUM1E104ZFN	C.CAPACITOR CH 25V 0.1U	1	
C938-40		ECEA1CPZ101	E.CAPACITOR 16V 100U	3	
C941		ECEA1HPZ3R3	E.CAPACITOR 50V 3.3U	1	
C942		ECEA1CPZ470	E.CAPACITOR 16V 47U	1	
C944		ECUM1H103KBN	C.CAPACITOR CH 50V 0.01U	1	
C945,46		ECEA1CPZ101	E.CAPACITOR 16V 100U	2	
C947,48		ECEA1HPZ010	E.CAPACITOR 50V 1U	2	
C949		ECUM1E104ZFN	C.CAPACITOR CH 25V 0.1U	1	
C950		ECEA1CPZ101	E.CAPACITOR 16V 100U	1	
D1		MA153	DIODE	1	
D2		MA151K	DIODE	1	
D3,D4		MA3024	DIODE	2	
D101		MA151K	DIODE	1	
D301		MA151K	DIODE	1	
D501		MA153	DIODE	1	
D502		MA151WA	DIODE	1	
D552-57		MA153	DIODE	6	
D558-60		MA3100	DIODE	3	
D561-64		MA153	DIODE	4	
D565,66		MA151K	DIODE	2	
D568-71		MA165	DIODE	4	
D901		MA151WK	DIODE	1	
D902-04		MA151K	DIODE	3	
D905		MA153	DIODE	1	
FL1		VLQ0142	COIL	1	
FL101		EIR7QH007Q	FILTER	1	
FL102		VLF0829	FILTER	1	
FL103		ELM7Q306A	COIL	1	
FL201		VLQ0190	COIL 4.7MH	1	
FL202		VLQ0402	COIL	1	
FL301		EIR7QH007Q	FILTER	1	
FL302		VLF0829	FILTER	1	
FL303		ELM7Q306A	COIL	1	
FL401		VLQ0190	COIL 4.7MH	1	
FL402		VLQ0402	COIL	1	
FL701		VLF0427	FILTER	1	
FL801		VLF0427	FILTER	1	

Refer to the P.C.BOARDS LIST, page 6-1-1, before using this page.

Ref.No.		Part No.	Part Name & Description	Pcs	Remarks
FL901		ELB4L053	FILTER	1	
FL902		ELB4M043	FILTER	1	
IC1-C3		UPD4053BG	IC	3	
IC4		NJM4558M	IC	1	
IC5,C6		RC082BM	IC	2	
IC101		AN6558S	IC	1	
IC102		RC4556MB	IC	1	
IC103		UPD4053BG	IC	1	
IC104		NJM4558M	IC	1	
IC105		TEA0666T	IC	1	
IC106		AN78N09	IC	1	
IC107		AN79N09	IC	1	
IC108		NJM4558M	IC	1	
IC201-03		NJM4558M	IC	3	
IC273		TEA0666T	IC	1	
IC301		AN6558S	IC	1	
IC302		RC4556MB	IC	1	
IC303		UPD4053BG	IC	1	
IC304		NJM4558M	IC	1	
IC305		TEA0666T	IC	1	
IC306		AN78N09	IC	1	
IC307		AN79N09	IC	1	
IC308		NJM4558M	IC	1	
IC401-03		NJM4558M	IC	3	
IC473		TEA0666T	IC	1	
IC552		MB620412PF	IC	1	
IC553		AN78L20	IC	1	
IC554-56		LM2904M	IC	3	
IC701		NJM4558M	IC	1	
IC703		NJM4558M	IC	1	
IC801		NJM4558M	IC	1	
IC802		UPD4053BG	IC	1	
IC803,04		NJM4558M	IC	2	
IC805		BA7700K1	IC	1	
IC901		AN78L12	IC	1	
IC902		AN78L05	IC	1	
IC903		AN79L09	IC	1	
IC904		AN78L09	IC	1	
L1		EIR7QG010B	IF TRANSFORMER	1	
L101,02		VLQEL05F101K	COIL 100UH	2	
L301,02		VLQEL05F101K	COIL 100UH	2	
L551		VLQEL05S2R2K	COIL 2.2UH	1	
L552		VLQEL05S471K	COIL 470UH	1	
L553,54		VLQEL05S470J	COIL 47UH	2	
L901		VLQEL05S470J	COIL 47UH	1	
L902		VLQEL05S221J	COIL 220UH	1	
L903		VLQEL05F101K	COIL 100UH	1	
L904		VLQEL05S820J	COIL 82UH	1	
L905		VLQEL05S331J	COIL 330UH	1	
L906,07		VLQEL05F101K	COIL 100UH	2	
L909		VLQEL05S271J	COIL 270UH	1	
L910-13		VLQEL05F101K	COIL 100UH	4	
P101		VJP1232R	CONNECTOR(MALE) 5P	1	
P301		VJP1232G	CONNECTOR (MALE)	1	
P551		VJP1239T	CONNECTOR(MALE) 12P	1	
P553		VJP1230T	CONNECTOR(MALE) 3P	1	
Q1		2SD602	TRANSISTOR	1	(Q,R)
Q2		UN2113	TRANSISTOR-RESISTOR	1	
Q3		2SA1018	TRANSISTOR	1	(R)
Q4,Q5		2SC3478A	TRANSISTOR	2	
Q6		2SD602	TRANSISTOR	1	(Q,R)
Q7		2SD1328	TRANSISTOR CHIP	1	(Q,R)
Q11		UN2211	TRANSISTOR-RESISTOR	1	

Ref.No.		Part No.	Part Name & Description	Pcs	Remarks
Q12		2SB710	TRANSISTOR	1	
Q14		UN2210	TRANSISTOR-RESISTOR	1	
Q101		UN2113	TRANSISTOR-RESISTOR	1	
Q102		UN2213	TRANSISTOR-RESISTOR	1	
Q103-05		2SD601	TRANSISTOR CHIP	3	(Q,R)
Q106		UN2213	TRANSISTOR-RESISTOR	1	
Q107		2SD1328	TRANSISTOR CHIP	1	(Q,R)
Q108		UN2113	TRANSISTOR-RESISTOR	1	
Q109,10		2SD601	TRANSISTOR CHIP	2	(Q,R)
Q111,12		2SD1011	TRANSISTOR	2	
Q113		2SA1018	TRANSISTOR	1	(R)
Q114		2SK146	TRANSISTOR	1	(B,L)
Q115		2SD601	TRANSISTOR CHIP	1	(Q,R)
Q116		2SB709	TRANSISTOR CHIP	1	(Q,R)
Q117		2SD601	TRANSISTOR CHIP	1	(Q,R)
Q118-20		UN2213	TRANSISTOR-RESISTOR	3	
Q122		UN2213	TRANSISTOR-RESISTOR	1	
Q201		2SD601	TRANSISTOR CHIP	1	(Q,R)
Q202		2SB709	TRANSISTOR CHIP	1	(Q,R)
Q203		2SD601	TRANSISTOR CHIP	1	(Q,R)
Q204		2SB709	TRANSISTOR CHIP	1	(Q,R)
Q205		2SD1328	TRANSISTOR CHIP	1	(Q,R)
Q301		UN2113	TRANSISTOR-RESISTOR	1	
Q302		UN2213	TRANSISTOR-RESISTOR	1	
Q303-05		2SD601	TRANSISTOR CHIP	3	(Q,R)
Q306		UN2213	TRANSISTOR-RESISTOR	1	
Q307		2SD1328	TRANSISTOR CHIP	1	(Q,R)
Q308		UN2113	TRANSISTOR-RESISTOR	1	
Q309,10		2SD601	TRANSISTOR CHIP	2	(Q,R)
Q311,12		2SD1011	TRANSISTOR	2	
Q313		2SA1018	TRANSISTOR	1	(R)
Q314		2SK146	TRANSISTOR	1	(B,L)
Q315		2SD601	TRANSISTOR CHIP	1	(Q,R)
Q316		2SB709	TRANSISTOR CHIP	1	(Q,R)
Q317		2SD601	TRANSISTOR CHIP	1	(Q,R)
Q318-20		UN2213	TRANSISTOR-RESISTOR	3	
Q322		UN2213	TRANSISTOR-RESISTOR	1	
Q401		2SD601	TRANSISTOR CHIP	1	(Q,R)
Q402		2SB709	TRANSISTOR CHIP	1	(Q,R)
Q403		2SD601	TRANSISTOR CHIP	1	(Q,R)
Q404		2SB709	TRANSISTOR CHIP	1	(Q,R)
Q405		2SD1328	TRANSISTOR CHIP	1	(Q,R)
Q501		2SB709	TRANSISTOR CHIP	1	(Q,R)
Q502		UN2113	TRANSISTOR-RESISTOR	1	
Q551-62		UN2213	TRANSISTOR-RESISTOR	12	
Q563,64		UN2113	TRANSISTOR-RESISTOR	2	
Q565-68		2SC2295	TRANSISTOR CHIP	4	(B,C)
Q571		2SC2497	TRANSISTOR	1	
Q572		2SB710	TRANSISTOR	1	
Q573,74		2SD1994A	TRANSISTOR	2	(Q,R)
Q575		2SC2497	TRANSISTOR	1	
Q576		2SB710	TRANSISTOR	1	
Q577,78		2SD1994A	TRANSISTOR	2	(Q,R)
Q579		2SD1992A	TRANSISTOR	1	
Q580		2SB710	TRANSISTOR	1	
Q581,82		2SD1994A	TRANSISTOR	2	(Q,R)
Q583		2SB710	TRANSISTOR	1	
Q584,85		2SD1328	TRANSISTOR CHIP	2	(Q,R)
Q587		2SB710	TRANSISTOR	1	
Q588,89		2SD1994A	TRANSISTOR	2	(Q,R)
Q590		2SB710	TRANSISTOR	1	
Q591,92		2SD1328	TRANSISTOR CHIP	2	(Q,R)
Q593		2SC2497	TRANSISTOR	1	
Q594		2SB710	TRANSISTOR	1	
Q595,96		2SD1994A	TRANSISTOR	2	(Q,R)
Q597		2SD1992A	TRANSISTOR	1	
Q598		2SB710	TRANSISTOR	1	
Q599,00		2SD1994A	TRANSISTOR	2	(Q,R)
Q601		2SB710	TRANSISTOR	1	
Q602,03		2SD1328	TRANSISTOR CHIP	2	(Q,R)
Q604		UN2213	TRANSISTOR-RESISTOR	1	
Q605		2SB710	TRANSISTOR	1	
Q606		2SD1992A	TRANSISTOR	1	
Q607		2SB710	TRANSISTOR	1	
Q608,09		2SD1994A	TRANSISTOR	2	(Q,R)

Refer to the P.C.BOARDS LIST, page 6-1-1, before using this page.

Ref.No.		Part No.	Part Name & Description	Pcs	Remarks
Q610		2SB710	TRANSISTOR	1	
Q611,12		2SD1328	TRANSISTOR CHIP	2	(Q,R)
Q613		UN2213	TRANSISTOR-RESISTOR	1	
Q614		2SB710	TRANSISTOR	1	
Q615		2SD1992A	TRANSISTOR	1	
Q616		2SB710	TRANSISTOR	1	
Q617,18		2SD1994A	TRANSISTOR	2	(Q,R)
Q619-21		UN2213	TRANSISTOR-RESISTOR	3	
Q701		2SD1328	TRANSISTOR CHIP	1	(Q,R)
Q702		2SD601	TRANSISTOR CHIP	1	(Q,R)
Q801		2SD1328	TRANSISTOR CHIP	1	(Q,R)
Q802		2SD601	TRANSISTOR CHIP	1	(Q,R)
Q901		UN2113	TRANSISTOR-RESISTOR	1	
Q902-04		UN2213	TRANSISTOR-RESISTOR	3	
Q909		2SC2404	TRANSISTOR CHIP	1	(B,C)
Q910,11		2SD601	TRANSISTOR CHIP	2	(Q,R)
Q912		2SC2404	TRANSISTOR CHIP	1	(B,C)
Q913,14		2SD601	TRANSISTOR CHIP	2	(Q,R)
Q915		2SC2404	TRANSISTOR CHIP	1	(B,C)
Q916,17		2SD601	TRANSISTOR CHIP	2	(Q,R)
Q920		UN2113	TRANSISTOR-RESISTOR	1	
			RESISTORS		
R1		ERJ6GEYJ102	M.RESISTOR CH 1/10W 1K	1	
R2		ERJ6GEYJ223	M.RESISTOR CH 1/10W 22K	1	
R3,R4		ERJ6GEYJ473	M.RESISTOR CH 1/10W 47K	2	
R5		ERJ6GEYJ472	M.RESISTOR CH 1/10W 4.7K	1	
R6,R7		ERJ6GEYJ103	M.RESISTOR CH 1/10W 10K	2	
R8		ERJ6GEYJ104	M.RESISTOR CH 1/10W 100K	1	
R9		ERJ6GEYJ472	M.RESISTOR CH 1/10W 4.7K	1	
R10		ERJ6GEYJ471	M.RESISTOR CH 1/10W 470	1	
R11		ERJ6GEYJ103	M.RESISTOR CH 1/10W 10K	1	
R12		ERJ6GEYJ100	M.RESISTOR CH 1/10W 10	1	
R13		ERJ6GEYJ473	M.RESISTOR CH 1/10W 47K	1	
R14		ERJ6GEYJ102	M.RESISTOR CH 1/10W 1K	1	
R15		ERJ6GEY0R00	M.RESISTOR CH 1/10W 0	1	
R16		ERJ6GEYJ224	M.RESISTOR CH 1/10W 220K	1	
R17		ERJ6GEYJ562	M.RESISTOR CH 1/10W 5.6K	1	
R18		ERJ6GEYJ473	M.RESISTOR CH 1/10W 47K	1	
R19		ERJ6GEYJ331	M.RESISTOR CH 1/10W 330	1	
R20		ERJ6GEYJ473	M.RESISTOR CH 1/10W 47K	1	
R21		ERJ6GEYJ123	M.RESISTOR CH1/10W 12K	1	
R22		ERJ6GEYJ104	M.RESISTOR CH 1/10W 100K	1	
R23		ERJ6GEYJ102	M.RESISTOR CH 1/10W 1K	1	
R24		ERJ6GEYJ470	M.RESISTOR CH 1/10W 47	1	
R25		ERJ6GEYJ332	M.RESISTOR CH 1/10W 3.3K	1	
R26		ERJ6GEYJ473	M.RESISTOR CH 1/10W 47K	1	
R27		ERJ6GEYJ472	M.RESISTOR CH 1/10W 4.7K	1	
R29		ERJ6GEYJ470	M.RESISTOR CH 1/10W 47	1	
R30		ERJ6GEYJ102	M.RESISTOR CH 1/10W 1K	1	
R39		ERJ6GEYJ104	M.RESISTOR CH 1/10W 100K	1	
R42,43		ERJ6GEYJ223	M.RESISTOR CH 1/10W 22K	2	
R44		ERJ6GEYJ104	M.RESISTOR CH 1/10W 100K	1	
R49		ERJ6GEYJ103	M.RESISTOR CH 1/10W 10K	1	
R50		ERDS2TJ223	C.RESISTOR 1/4W 22K	1	
R101,02		ERJ6GEYJ103	M.RESISTOR CH 1/10W 10K	2	
R104,05		ERJ6GEYJ223	M.RESISTOR CH 1/10W 22K	2	
R106		ERJ6GEYJ103	M.RESISTOR CH 1/10W 10K	1	
R107		ERJ6GEYJ153	M.RESISTOR CH 1/10W 15K	1	
R108		ERJ6GEYJ681	M.RESISTOR CH 1/10W 680	1	
R109		ERJ6GEYJ470	M.RESISTOR CH 1/10W 47	1	
R110		ERJ6GEYJ102	M.RESISTOR CH 1/10W 1K	1	
R111		ERJ6GEYJ393	M.RESISTOR CH 1/10W 39K	1	
R112		ERJ6GEYJ104	M.RESISTOR CH 1/10W 100K	1	
R113		ERJ6GEYJ102	M.RESISTOR CH 1/10W 1K	1	
R114		ERJ6GEYJ332	M.RESISTOR CH 1/10W 3.3K	1	
R115		ERJ6GEYJ103	M.RESISTOR CH 1/10W 10K	1	
R116		ERJ6GEYJ332	M.RESISTOR CH 1/10W 3.3K	1	
R117		ERJ6GEYJ102	M.RESISTOR CH 1/10W 1K	1	
R118-20		ERJ6GEYJ104	M.RESISTOR CH 1/10W 100K	3	
R121		ERJ6GEYJ102	M.RESISTOR CH 1/10W 1K	1	
R122		ERJ6GEYJ103	M.RESISTOR CH 1/10W 10K	1	
R123		ERJ6GEYJ102	M.RESISTOR CH 1/10W 1K	1	

Ref.No.		Part No.	Part Name & Description	Pcs	Remarks
R124		ERJ6GEYG112	M.RESISTOR CH 1/10W 1.1K	1	
R125		ERJ6GEY0R00	M.RESISTOR CH 1/10W 0	1	
R126		ERJ6GEYJ104	M.RESISTOR CH 1/10W 100K	1	
R127		ERJ6GEYJ102	M.RESISTOR CH 1/10W 1K	1	
R128		ERJ6GEYJ123	M.RESISTOR CH1/10W 12K	1	
R129		ERJ6GEYJ104	M.RESISTOR CH 1/10W 100K	1	
R130		ERJ6GEYJ103	M.RESISTOR CH 1/10W 10K	1	
R131		ERJ6GEYJ100	M.RESISTOR CH 1/10W 10	1	
R133,34		ERJ6GEYJ223	M.RESISTOR CH 1/10W 22K	2	
R135		ERJ6GEYJ472	M.RESISTOR CH 1/10W 4.7K	1	
R136		ERJ6GEYJ561	M.RESISTOR CH 1/10W 560	1	
R137		ERJ6GEYJ332	M.RESISTOR CH 1/10W 3.3K	1	
R138,39		VRE0034E272	M.RESISTOR CH 1/10W 2.7K	2	
R140		ERJ6GEYJ103	M.RESISTOR CH 1/10W 10K	1	
R141		VRE0034E473	M.RESISTOR CH 1/10W 47K	1	
R142		VRE0034E272	M.RESISTOR CH 1/10W 2.7K	1	
R143		VRE0034E470	M.RESISTOR CH 1/10W 47	1	
R144		VRE0034E104	M.RESISTOR CH 1/10W 100K	1	
R145		ERJ6GEYJ102	M.RESISTOR CH 1/10W 1K	1	
R146		ERJ6GEYJ333	M.RESISTOR CH 1/10W 33K	1	
R147		ERJ6GEYJ103	M.RESISTOR CH 1/10W 10K	1	
R148,49		ERJ6GEYJ102	M.RESISTOR CH 1/10W 1K	2	
R150		ERJ6GEYJ223	M.RESISTOR CH 1/10W 22K	1	
R151		ERJ6GEYJ102	M.RESISTOR CH 1/10W 1K	1	
R152		ERJ6GEYJ103	M.RESISTOR CH 1/10W 10K	1	
R153		ERJ6GEYJ221	M.RESISTOR CH 1/10W 220	1	
R154		ERJ6GEYJ101	M.RESISTOR CH 1/10W 100	1	
R155		ERJ6GEYJ272	M.RESISTOR CH 1/10W 2.7K	1	
R156		ERJ6GEYJ332	M.RESISTOR CH 1/10W 3.3K	1	
R157		VRE0034E102	M.RESISTOR CH 1/10W 1K	1	
R158		VRE0034E332	M.RESISTOR CH 1/10W 3.3K	1	
R159		ERJ6GEYJ221	M.RESISTOR CH 1/10W 220	1	
R160		VRE0034E823	M.RESISTOR CH 1/10W 82K	1	
R161		VRE0034E333	M.RESISTOR CH 1/10W 33K	1	
R162		VRE0034E823	M.RESISTOR CH 1/10W 82K	1	
R163		ERJ6GEYJ104	M.RESISTOR CH 1/10W 100K	1	
R164		VRE0034E683	M.RESISTOR CH 1/10W 68K	1	
R165		VRE0034E222	M.RESISTOR CH 1/10W 2.2K	1	
R166		VRE0034E512	M.RESISTOR CH 1/10W 5.1K	1	
R167		VRE0034E822	M.RESISTOR CH 1/10W 8.2K	1	
R168		VRE0034E203	M.RESISTOR CH 1/10W 20K	1	
R169		VRE0034E821	M.RESISTOR CH 1/10W 820	1	
R201		ERJ6GEYJ104	M.RESISTOR CH 1/10W 100K	1	
R202		ERJ6GEYJ103	M.RESISTOR CH 1/10W 10K	1	
R204		ERJ6GEYJ103	M.RESISTOR CH 1/10W 10K	1	
R205		ERJ6GEYJ332	M.RESISTOR CH 1/10W 3.3K	1	
R206		ERJ6GEYJ183	M.RESISTOR CH 1/10W 18K	1	
R207		ERJ6GEYJ132	M.RESISTOR CH1/10W 1.3K	1	
R208		ERJ6GEYJ183	M.RESISTOR CH 1/10W 18K	1	
R209		ERJ6GEYJ223	M.RESISTOR CH 1/10W 22K	1	
R210-12		ERJ6GEYJ104	M.RESISTOR CH 1/10W 100K	3	
R213		ERJ6GEYJ223	M.RESISTOR CH 1/10W 22K	1	
R214		ERJ6GEYJ152	M.RESISTOR CH 1/10W 1.5K	1	
R215		ERJ6GEYJ332	M.RESISTOR CH 1/10W 3.3K	1	
R216		ERJ6GEYJ102	M.RESISTOR CH 1/10W 1K	1	
R217		ERJ6GEYJ104	M.RESISTOR CH 1/10W 100K	1	
R218		ERJ6GEYJ103	M.RESISTOR CH 1/10W 10K	1	
R219		ERJ6GEYJ472	M.RESISTOR CH 1/10W 4.7K	1	
R220		ERJ6GEYJ682	M.RESISTOR CH 1/10W 6.8K	1	
R221		ERJ6GEYJ471	M.RESISTOR CH 1/10W 470	1	
R222		ERJ6GEYJ102	M.RESISTOR CH 1/10W 1K	1	
R223		ERJ6GEYJ392	M.RESISTOR CH 1/10W 3.9K	1	
R224,25		ERJ6GEYJ103	M.RESISTOR CH 1/10W 10K	2	
R226		ERJ6GEYJ102	M.RESISTOR CH 1/10W 1K	1	
R227		ERJ6GEYJ183	M.RESISTOR CH 1/10W 18K	1	
R228		ERJ6GEYJ272	M.RESISTOR CH 1/10W 2.7K	1	
R229		ERJ6GEYJ103	M.RESISTOR CH 1/10W 10K	1	
R230		ERJ6GEYJ102	M.RESISTOR CH 1/10W 1K	1	
R231		ERJ6GEYJ103	M.RESISTOR CH 1/10W 10K	1	
R232		ERJ6GEYJ272	M.RESISTOR CH 1/10W 2.7K	1	
R233		ERJ6GEYJ561	M.RESISTOR CH 1/10W 560	1	
R235		ERJ6GEYJ103	M.RESISTOR CH 1/10W 10K	1	
R236		ERJ6GEYJ331	M.RESISTOR CH 1/10W 330	1	
R301,02		ERJ6GEYJ103	M.RESISTOR CH 1/10W 10K	2	
R304		ERJ6GEYJ223	M.RESISTOR CH 1/10W 22K	1	

Refer to the P.C.BOARDS LIST, page 6-1-1, before using this page.

Ref.No.		Part No.	Part Name & Description	Pcs	Remarks
R306		ERJ6GEYJ103	M.RESISTOR CH 1/10W 10K	1	
R307		ERJ6GEYJ153	M.RESISTOR CH 1/10W 15K	1	
R308		ERJ6GEYJ681	M.RESISTOR CH 1/10W 680	1	
R309		ERJ6GEYJ470	M.RESISTOR CH 1/10W 47	1	
R310		ERJ6GEYJ102	M.RESISTOR CH 1/10W 1K	1	
R311		ERJ6GEYJ393	M.RESISTOR CH 1/10W 39K	1	
R312		ERJ6GEYJ104	M.RESISTOR CH 1/10W 100K	1	
R313		ERJ6GEYJ102	M.RESISTOR CH 1/10W 1K	1	
R314		ERJ6GEYJ332	M.RESISTOR CH 1/10W 3.3K	1	
R315		ERJ6GEYJ103	M.RESISTOR CH 1/10W 10K	1	
R316		ERJ6GEYJ332	M.RESISTOR CH 1/10W 3.3K	1	
R317		ERJ6GEYJ102	M.RESISTOR CH 1/10W 1K	1	
R318-20		ERJ6GEYJ104	M.RESISTOR CH 1/10W 100K	3	
R321		ERJ6GEYJ102	M.RESISTOR CH 1/10W 1K	1	
R322		ERJ6GEYJ103	M.RESISTOR CH 1/10W 10K	1	
R323		ERJ6GEYJ102	M.RESISTOR CH 1/10W 1K	1	
R324		ERJ6GEYG112	M.RESISTOR CH 1/10W 1.1K	1	
R325		ERJ6GEY0R00	M.RESISTOR CH 1/10W 0	1	
R326		ERJ6GEYJ104	M.RESISTOR CH 1/10W 100K	1	
R327		ERJ6GEYJ102	M.RESISTOR CH 1/10W 1K	1	
R328		ERJ6GEYJ123	M.RESISTOR CH1/10W 12K	1	
R329		ERJ6GEYJ104	M.RESISTOR CH 1/10W 100K	1	
R330		ERJ6GEYJ103	M.RESISTOR CH 1/10W 10K	1	
R331		ERJ6GEYJ100	M.RESISTOR CH 1/10W 10	1	
R333,34		ERJ6GEYJ223	M.RESISTOR CH 1/10W 22K	2	
R335		ERJ6GEYJ472	M.RESISTOR CH 1/10W 4.7K	1	
R336		ERJ6GEYJ561	M.RESISTOR CH 1/10W 560	1	
R337		ERJ6GEYJ332	M.RESISTOR CH 1/10W 3.3K	1	
R338,39		VRE0034E272	M.RESISTOR CH 1/10W 2.7K	2	
R340		ERJ6GEYJ103	M.RESISTOR CH 1/10W 10K	1	
R341		VRE0034E473	M.RESISTOR CH 1/10W 47K	1	
R342		VRE0034E272	M.RESISTOR CH 1/10W 2.7K	1	
R343		VRE0034E470	M.RESISTOR CH 1/10W 47	1	
R344		VRE0034E104	M.RESISTOR CH 1/10W 100K	1	
R345		ERJ6GEYJ102	M.RESISTOR CH 1/10W 1K	1	
R346		ERJ6GEYJ333	M.RESISTOR CH 1/10W 33K	1	
R347		ERJ6GEYJ103	M.RESISTOR CH 1/10W 10K	1	
R348,49		ERJ6GEYJ102	M.RESISTOR CH 1/10W 1K	2	
R350		ERJ6GEYJ223	M.RESISTOR CH 1/10W 22K	1	
R351		ERJ6GEYJ102	M.RESISTOR CH 1/10W 1K	1	
R352		ERJ6GEYJ103	M.RESISTOR CH 1/10W 10K	1	
R353		ERJ6GEYJ221	M.RESISTOR CH 1/10W 220	1	
R354		ERJ6GEYJ101	M.RESISTOR CH 1/10W 100	1	
R355		ERJ6GEYJ272	M.RESISTOR CH 1/10W 2.7K	1	
R356		ERJ6GEYJ332	M.RESISTOR CH 1/10W 3.3K	1	
R357		VRE0034E102	M.RESISTOR CH 1/10W 1K	1	
R358		VRE0034E332	M.RESISTOR CH 1/10W 3.3K	1	
R359		ERJ6GEYJ221	M.RESISTOR CH 1/10W 220	1	
R360		VRE0034E823	M.RESISTOR CH 1/10W 82K	1	
R361		VRE0034E333	M.RESISTOR CH 1/10W 33K	1	
R362		VRE0034E823	M.RESISTOR CH 1/10W 82K	1	
R363		ERJ6GEYJ104	M.RESISTOR CH 1/10W 100K	1	
R364		VRE0034E683	M.RESISTOR CH 1/10W 68K	1	
R365		VRE0034E222	M.RESISTOR CH 1/10W 2.2K	1	
R366		VRE0034E512	M.RESISTOR CH 1/10W 5.1K	1	
R367		VRE0034E822	M.RESISTOR CH 1/10W 8.2K	1	
R368		VRE0034E203	M.RESISTOR CH 1/10W 20K	1	
R369		VRE0034E821	M.RESISTOR CH 1/10W 820	1	
R401		ERJ6GEYJ104	M.RESISTOR CH 1/10W 100K	1	
R402-04		ERJ6GEYJ103	M.RESISTOR CH 1/10W 10K	3	
R405		ERJ6GEYJ332	M.RESISTOR CH 1/10W 3.3K	1	
R406		ERJ6GEYJ183	M.RESISTOR CH 1/10W 18K	1	
R407		ERJ6GEYJ132	M.RESISTOR CH1/10W 1.3K	1	
R408		ERJ6GEYJ183	M.RESISTOR CH 1/10W 18K	1	
R409		ERJ6GEYJ223	M.RESISTOR CH 1/10W 22K	1	
R410-12		ERJ6GEYJ104	M.RESISTOR CH 1/10W 100K	3	
R413		ERJ6GEYJ223	M.RESISTOR CH 1/10W 22K	1	
R414		ERJ6GEYJ152	M.RESISTOR CH 1/10W 1.5K	1	
R415		ERJ6GEYJ332	M.RESISTOR CH 1/10W 3.3K	1	
R416		ERJ6GEYJ102	M.RESISTOR CH 1/10W 1K	1	
R417		ERJ6GEYJ104	M.RESISTOR CH 1/10W 100K	1	
R418		ERJ6GEYJ103	M.RESISTOR CH 1/10W 10K	1	
R419		ERJ6GEYJ472	M.RESISTOR CH 1/10W 4.7K	1	
R420		ERJ6GEYJ682	M.RESISTOR CH 1/10W 6.8K	1	
R421		ERJ6GEYJ471	M.RESISTOR CH 1/10W 470	1	

Ref.No.		Part No.	Part Name & Description	Pcs	Remarks
R422		ERJ6GEYJ102	M.RESISTOR CH 1/10W 1K	1	
R423		ERJ6GEYJ392	M.RESISTOR CH 1/10W 3.9K	1	
R424,25		ERJ6GEYJ103	M.RESISTOR CH 1/10W 10K	2	
R426		ERJ6GEYJ102	M.RESISTOR CH 1/10W 1K	1	
R427		ERJ6GEYJ183	M.RESISTOR CH 1/10W 18K	1	
R428		ERJ6GEYJ272	M.RESISTOR CH 1/10W 2.7K	1	
R429		ERJ6GEYJ103	M.RESISTOR CH 1/10W 10K	1	
R430		ERJ6GEYJ102	M.RESISTOR CH 1/10W 1K	1	
R431		ERJ6GEYJ103	M.RESISTOR CH 1/10W 10K	1	
R432		ERJ6GEYJ272	M.RESISTOR CH 1/10W 2.7K	1	
R433		ERJ6GEYJ561	M.RESISTOR CH 1/10W 560	1	
R435		ERJ6GEYJ103	M.RESISTOR CH 1/10W 10K	1	
R436		ERJ6GEYJ331	M.RESISTOR CH 1/10W 330	1	
R501		ERJ6GEYJ103	M.RESISTOR CH 1/10W 10K	1	
R502,03		ERJ6GEYJ223	M.RESISTOR CH 1/10W 22K	2	
R508		ERJ6GEYJ103	M.RESISTOR CH 1/10W 10K	1	
R509		ERJ6GEYJ223	M.RESISTOR CH 1/10W 22K	1	
R551		ERJ6GEYJ223	M.RESISTOR CH 1/10W 22K	1	
R552		ERJ6GEYJ103	M.RESISTOR CH 1/10W 10K	1	
R553		ERJ6GEYJ102	M.RESISTOR CH 1/10W 1K	1	
R554		ERJ6GEYJ330	M.RESISTOR CH1/10W 33	1	
R555		ERJ6GEYJ103	M.RESISTOR CH 1/10W 10K	1	
R556		ERJ6GEYJ473	M.RESISTOR CH 1/10W 47K	1	
R557		ERJ6GEYJ330	M.RESISTOR CH1/10W 33	1	
R558		ERJ6GEYJ103	M.RESISTOR CH 1/10W 10K	1	
R559		ERJ6GEYJ392	M.RESISTOR CH 1/10W 3.9K	1	
R560		ERJ6GEYJ101	M.RESISTOR CH 1/10W 100	1	
R561		ERJ6GEYJ103	M.RESISTOR CH 1/10W 10K	1	
R563		ERJ6GEYJ101	M.RESISTOR CH 1/10W 100	1	
R564		ERJ6GEYJ105	M.RESISTOR CH 1/10W 1M	1	
R567		ERJ6GEY0R00	M.RESISTOR CH 1/10W 0	1	
R569		ERJ6GEY0R00	M.RESISTOR CH 1/10W 0	1	
R570		ERJ6GEYJ472	M.RESISTOR CH 1/10W 4.7K	1	
R571		ERJ6GEYJ333	M.RESISTOR CH 1/10W 33K	1	
R572,73		ERJ6GEYJ220	M.RESISTOR CH1/10W 22	2	
R574		ERDS2TJ8R2	C.RESISTOR 1/4W 8.2	1	
R575		ERJ6GEYJ472	M.RESISTOR CH 1/10W 4.7K	1	
R576		ERJ6GEYJ333	M.RESISTOR CH 1/10W 33K	1	
R577,78		ERJ6GEYJ220	M.RESISTOR CH1/10W 22	2	
R579		ERDS2TJ8R2	C.RESISTOR 1/4W 8.2	1	
R580		ERJ6GEYJ103	M.RESISTOR CH 1/10W 10K	1	
R581		ERJ6GEYJ683	M.RESISTOR CH 1/10W 68K	1	
R582		ERJ6GEYJ103	M.RESISTOR CH 1/10W 10K	1	
R583		ERJ6GEYJ824	M.RESISTOR CH 1/10W 820K	1	
R584,85		ERJ6GEYJ220	M.RESISTOR CH1/10W 22	2	
R586,87		ERJ6GEYJ273	M.RESISTOR CH1/10W 27K	2	
R588		ERDS2TJ100	C.RESISTOR 1/4W 10	1	
R589		ERJ6GEYJ103	M.RESISTOR CH 1/10W 10K	1	
R590,91		ERJ6GEYJ222	M.RESISTOR CH 1/10W 2.2K	2	
R592		ERJ6GEYK1R0	M.RESISTOR CH 1/10W 1	1	
R593		ERJ6GEYJ103	M.RESISTOR CH 1/10W 10K	1	
R594		ERJ6GEYJ683	M.RESISTOR CH 1/10W 68K	1	
R595		ERJ6GEYJ103	M.RESISTOR CH 1/10W 10K	1	
R596		ERJ6GEYJ824	M.RESISTOR CH 1/10W 820K	1	
R597,98		ERJ6GEYJ220	M.RESISTOR CH1/10W 22	2	
R599,00		ERJ6GEYJ273	M.RESISTOR CH1/10W 27K	2	
R601		ERDS2TJ100	C.RESISTOR 1/4W 10	1	
R602		ERJ6GEYJ103	M.RESISTOR CH 1/10W 10K	1	
R603,04		ERJ6GEYJ222	M.RESISTOR CH 1/10W 2.2K	2	
R605		ERJ6GEYK1R0	M.RESISTOR CH 1/10W 1	1	
R606		ERJ6GEYJ472	M.RESISTOR CH 1/10W 4.7K	1	
R607		ERJ6GEYJ333	M.RESISTOR CH 1/10W 33K	1	
R608,09		ERJ6GEYJ220	M.RESISTOR CH1/10W 22	2	
R610,11		ERJ6GEYJ224	M.RESISTOR CH 1/10W 220K	2	
R612		ERDS2TJ470	C.RESISTOR 1/4W 47	1	
R613		ERJ6GEYJ103	M.RESISTOR CH 1/10W 10K	1	
R614		ERJ6GEYJ683	M.RESISTOR CH 1/10W 68K	1	
R615		ERJ6GEYJ103	M.RESISTOR CH 1/10W 10K	1	
R616		ERJ6GEYJ824	M.RESISTOR CH 1/10W 820K	1	
R617,18		ERJ6GEYJ220	M.RESISTOR CH1/10W 22	2	
R619,20		ERJ6GEYJ104	M.RESISTOR CH 1/10W 100K	2	
R621		ERDS2TJ6R8	C.RESISTOR 1/4W 6.8	1	
R622		ERJ6GEYJ103	M.RESISTOR CH 1/10W 10K	1	
R623,24		ERJ6GEYJ222	M.RESISTOR CH 1/10W 2.2K	2	
R625		ERJ6GEYK1R0	M.RESISTOR CH 1/10W 1	1	

Refer to the P.C.BOARDS LIST, page 6-1-1, before using this page.

Ref.No.		Part No.	Part Name & Description	Pcs	Remarks
R626		ERJ6GEYJ184	M.RESISTOR CH1/10W 180K	1	
R627,28		ERJ6GEYJ103	M.RESISTOR CH 1/10W 10K	2	
R629,30		ERJ6GEYJ220	M.RESISTOR CH1/10W 22	2	
R631,32		ERJ6GEYJ104	M.RESISTOR CH 1/10W 100K	2	
R633		ERDS2TJ6R8	C.RESISTOR 1/4W 6.8	1	
R634		ERJ6GEYJ103	M.RESISTOR CH 1/10W 10K	1	
R635,36		ERJ6GEYJ222	M.RESISTOR CH 1/10W 2.2K	2	
R637		ERJ6GEYK1R0	M.RESISTOR CH 1/10W 1	1	
R638		ERJ6GEYJ184	M.RESISTOR CH1/10W 180K	1	
R639,40		ERJ6GEYJ103	M.RESISTOR CH 1/10W 10K	2	
R641,42		ERJ6GEYJ220	M.RESISTOR CH1/10W 22	2	
R643,44		ERJ6GEYJ104	M.RESISTOR CH 1/10W 100K	2	
R645		ERDS2TJ6R8	C.RESISTOR 1/4W 6.8	1	
R646		ERJ6GEYK1R0	M.RESISTOR CH 1/10W 1	1	
R647-50		ERJ6GEYJ823	M.RESISTOR CH 1/10W 82K	4	
R651,52		ERJ6GEYJ103	M.RESISTOR CH 1/10W 10K	2	
R655,56		ERJ6GEY0R00	M.RESISTOR CH 1/10W 0	2	
R657		ERJ6GEYJ102	M.RESISTOR CH 1/10W 1K	1	
R658		ERJ6GEY0R00	M.RESISTOR CH 1/10W 0	1	
R659		ERJ6GEYJ472	M.RESISTOR CH 1/10W 4.7K	1	
R660,61		ERJ6GEYJ223	M.RESISTOR CH 1/10W 22K	2	
R662,63		ERJ6GEY0R00	M.RESISTOR CH 1/10W 0	2	
R664,65		ERJ6GEYJ392	M.RESISTOR CH 1/10W 3.9K	2	
R666		ERJ6GEYJ332	M.RESISTOR CH 1/10W 3.3K	1	
R667		ERJ6GEYJ473	M.RESISTOR CH 1/10W 47K	1	
R670-73		ERDS2TJ102	C.RESISTOR 1/4W 1K	4	
R701		ERJ6GEYJ104	M.RESISTOR CH 1/10W 100K	1	
R702,03		ERJ6GEYJ332	M.RESISTOR CH 1/10W 3.3K	2	
R704		ERJ6GEYJ102	M.RESISTOR CH 1/10W 1K	1	
R705		ERJ6GEYJ272	M.RESISTOR CH 1/10W 2.7K	1	
R706		ERJ6GEYJ102	M.RESISTOR CH 1/10W 1K	1	
R707,08		ERJ6GEYJ104	M.RESISTOR CH 1/10W 100K	2	
R709		ERJ6GEYJ472	M.RESISTOR CH 1/10W 4.7K	1	
R710		ERJ6GEYJ682	M.RESISTOR CH 1/10W 6.8K	1	
R718		ERJ6GEYJ272	M.RESISTOR CH 1/10W 2.7K	1	
R719,20		ERJ6GEYJ332	M.RESISTOR CH 1/10W 3.3K	2	
R728,29		ERJ6GEYJ821	M.RESISTOR CH 1/10W 820	2	
R730		ERJ6GEYJ681	M.RESISTOR CH 1/10W 680	1	
R731		ERJ6GEY0R00	M.RESISTOR CH 1/10W 0	1	
R732		ERJ6GEYG112	M.RESISTOR CH 1/10W 1.1K	1	
R733		ERJ6GEYJ103	M.RESISTOR CH 1/10W 10K	1	
R734		ERJ6GEYJ183	M.RESISTOR CH 1/10W 18K	1	
R735		ERJ6GEYJ562	M.RESISTOR CH 1/10W 5.6K	1	
R736		ERJ6GEYJ104	M.RESISTOR CH 1/10W 100K	1	
R737,38		ERJ6GEYJ122	M.RESISTOR CH1/10W 1.2K	2	
R739		VRE0034E362	M.RESISTOR CH 1/10W 3.6K	1	
R740		ERJ6GEYJ122	M.RESISTOR CH1/10W 1.2K	1	
R741,42		ERJ6GEYJ103	M.RESISTOR CH 1/10W 10K	2	
R743		ERJ6GEYJ473	M.RESISTOR CH 1/10W 47K	1	
R744		ERJ6GEYJ393	M.RESISTOR CH 1/10W 39K	1	
R745		ERJ6GEYJ473	M.RESISTOR CH 1/10W 47K	1	
R801		ERJ6GEYJ104	M.RESISTOR CH 1/10W 100K	1	
R802,03		ERJ6GEYJ332	M.RESISTOR CH 1/10W 3.3K	2	
R804		ERJ6GEYJ102	M.RESISTOR CH 1/10W 1K	1	
R805		ERJ6GEYJ272	M.RESISTOR CH 1/10W 2.7K	1	
R806		ERJ6GEYJ102	M.RESISTOR CH 1/10W 1K	1	
R807,08		ERJ6GEYJ104	M.RESISTOR CH 1/10W 100K	2	
R809		ERJ6GEYJ472	M.RESISTOR CH 1/10W 4.7K	1	
R810		ERJ6GEYJ682	M.RESISTOR CH 1/10W 6.8K	1	
R818		ERJ6GEYJ272	M.RESISTOR CH 1/10W 2.7K	1	
R819,20		ERJ6GEYJ332	M.RESISTOR CH 1/10W 3.3K	2	
R828,29		ERJ6GEYJ821	M.RESISTOR CH 1/10W 820	2	
R830		ERJ6GEYJ681	M.RESISTOR CH 1/10W 680	1	
R831		ERJ6GEY0R00	M.RESISTOR CH 1/10W 0	1	
R832		ERJ6GEYG112	M.RESISTOR CH 1/10W 1.1K	1	
R833		ERJ6GEYJ103	M.RESISTOR CH 1/10W 10K	1	
R834		ERJ6GEYJ183	M.RESISTOR CH 1/10W 18K	1	
R835		ERJ6GEYJ562	M.RESISTOR CH 1/10W 5.6K	1	
R836		ERJ6GEYJ104	M.RESISTOR CH 1/10W 100K	1	
R837,38		ERJ6GEYJ122	M.RESISTOR CH1/10W 1.2K	2	
R839		VRE0034E362	M.RESISTOR CH 1/10W 3.6K	1	
R840		ERJ6GEYJ122	M.RESISTOR CH1/10W 1.2K	1	
R841,42		ERJ6GEYJ103	M.RESISTOR CH 1/10W 10K	2	
R843		ERJ6GEYJ473	M.RESISTOR CH 1/10W 47K	1	
R844		ERJ6GEYJ393	M.RESISTOR CH 1/10W 39K	1	

Ref.No.		Part No.	Part Name & Description	Pcs	Remarks
R845		ERJ6GEYJ273	M.RESISTOR CH1/10W 27K	1	
R901		ERJ6GEYJ223	M.RESISTOR CH 1/10W 22K	1	
R904		ERJ6GEYJ103	M.RESISTOR CH 1/10W 10K	1	
R905		ERJ6GEYJ223	M.RESISTOR CH 1/10W 22K	1	
R906		ERJ6GEYJ102	M.RESISTOR CH 1/10W 1K	1	
R907		ERJ6GEYJ103	M.RESISTOR CH 1/10W 10K	1	
R909		ERJ6GEYJ101	M.RESISTOR CH 1/10W 100	1	
R910		ERJ6GEYJ103	M.RESISTOR CH 1/10W 10K	1	
R914		ERJ6GEYJ104	M.RESISTOR CH 1/10W 100K	1	
R917,18		ERJ6GEYJ561	M.RESISTOR CH 1/10W 560	2	
R919,20		ERJ6GEYJ222	M.RESISTOR CH 1/10W 2.2K	2	
R921		VRE0034E223	M.RESISTOR CH 1/10W 22K	1	
R922,23		ERJ6GEYJ104	M.RESISTOR CH 1/10W 100K	2	
R924		ERJ6GEYJ393	M.RESISTOR CH 1/10W 39K	1	
R925		ERJ6GEYJ123	M.RESISTOR CH1/10W 12K	1	
R926		ERJ6GEYJ334	M.RESISTOR CH 1/10W 330K	1	
R927		ERJ6GEYJ103	M.RESISTOR CH 1/10W 10K	1	
R928		ERJ6GEYJ104	M.RESISTOR CH 1/10W 100K	1	
R929		ERJ6GEYJ562	M.RESISTOR CH 1/10W 5.6K	1	
R930-32		ERJ6GEYJ102	M.RESISTOR CH 1/10W 1K	3	
R933		ERJ6GEYJ392	M.RESISTOR CH 1/10W 3.9K	1	
R934		ERJ6GEYJ823	M.RESISTOR CH 1/10W 82K	1	
R935		ERJ6GEYJ273	M.RESISTOR CH1/10W 27K	1	
R936		ERJ6GEYJ392	M.RESISTOR CH 1/10W 3.9K	1	
R937-39		ERJ6GEYJ102	M.RESISTOR CH 1/10W 1K	3	
R940		ERJ6GEYJ560	M.RESISTOR CH 1/10W 56	1	
R941		ERJ6GEYJ392	M.RESISTOR CH 1/10W 3.9K	1	
R942		ERJ6GEYJ102	M.RESISTOR CH 1/10W 1K	1	
R943		ERJ6GEYJ222	M.RESISTOR CH 1/10W 2.2K	1	
R944		ERJ6GEYJ823	M.RESISTOR CH 1/10W 82K	1	
R945		ERJ6GEYJ273	M.RESISTOR CH1/10W 27K	1	
R946-48		ERJ6GEYJ102	M.RESISTOR CH 1/10W 1K	3	
R949		ERJ6GEYJ390	M.RESISTOR CH 1/10W 39	1	
R950		ERJ6GEYJ392	M.RESISTOR CH 1/10W 3.9K	1	
R951		ERJ6GEYJ102	M.RESISTOR CH 1/10W 1K	1	
R952		ERJ6GEYJ222	M.RESISTOR CH 1/10W 2.2K	1	
R953		ERJ6GEYJ823	M.RESISTOR CH 1/10W 82K	1	
R954		ERJ6GEYJ273	M.RESISTOR CH1/10W 27K	1	
R955,56		ERJ6GEYJ102	M.RESISTOR CH 1/10W 1K	2	
R957		ERJ6GEYJ222	M.RESISTOR CH 1/10W 2.2K	1	
R958		ERJ6GEYJ823	M.RESISTOR CH 1/10W 82K	1	
R959		ERJ6GEYJ273	M.RESISTOR CH1/10W 27K	1	
R960		ERJ6GEYJ101	M.RESISTOR CH 1/10W 100	1	
R961		ERJ6GEYJ103	M.RESISTOR CH 1/10W 10K	1	
R962		ERJ6GEYJ102	M.RESISTOR CH 1/10W 1K	1	
R963		ERJ6GEYJ560	M.RESISTOR CH 1/10W 56	1	
R964		ERJ6GEY0R00	M.RESISTOR CH 1/10W 0	1	
R965		ERJ6GEYJ223	M.RESISTOR CH 1/10W 22K	1	
R966		ERJ6GEYJ103	M.RESISTOR CH 1/10W 10K	1	
SW101		VSS023703	SWITCH	1	
SW201		VSS023703	SWITCH	1	
SW301		VSS023703	SWITCH	1	
SW401		VSS023703	SWITCH	1	
T551,52		VLT0602	TRANSFORMER	2	
T553,54		VLT0603	TRANSFORMER	2	
T555		VLT0304	TRANSFORMER	1	
T556-58		VLT0603	TRANSFORMER	3	
TP1		VJR0582	PACK PIN	1	
TP101,02		VJR0582	PACK PIN	2	
TP104,05		VJR0582	PACK PIN	2	
TP201		VJR0582	PACK PIN	1	
TP301,02		VJR0582	PACK PIN	2	
TP304,05		VJR0582	PACK PIN	2	
TP401		VJR0582	PACK PIN	1	
TP501		VJR0582	PACK PIN	1	
TP551-58		VJR0582	PACK PIN	8	

Refer to the P.C.BOARDS LIST, page 6-1-1, before using this page.

Ref.No.		Part No.	Part Name & Description	Pcs	Remarks
TP601-09		VJR0582	PACK PIN	9	
TP702-04		VJR0582	PACK PIN	3	
TP802-04		VJR0582	PACK PIN	3	
TP901		VJR0582	PACK PIN	1	
TPG101		VJR0582	PACK PIN	1	
TPG301		VJR0582	PACK PIN	1	
TPG551		VJR0582	PACK PIN	1	
TPG901		VJR0582	PACK PIN	1	
VR101		VRV0109B103	V.RESISTOR 10K	1	
VR103		VRV0109B502	V.RESISTOR 5K	1	
VR201		VRV0109B203	V.RESISTOR 20K	1	
VR202		VRV0064B103	V.RESISTOR 10K	1	
VR203		VRV0109B502	V.RESISTOR 5K	1	
VR205		VRV0109B103	V.RESISTOR 10K	1	
VR206		VRV0109B502	V.RESISTOR 5K	1	
VR301		VRV0109B103	V.RESISTOR 10K	1	
VR303		VRV0109B502	V.RESISTOR 5K	1	
VR402		VRV0064B103	V.RESISTOR 10K	1	
VR403		VRV0109B502	V.RESISTOR 5K	1	
VR405		VRV0109B103	V.RESISTOR 10K	1	
VR406		VRV0109B502	V.RESISTOR 5K	1	
VR551,52		VRV0109B103	V.RESISTOR 10K	2	
VR701		VRV0109B203	V.RESISTOR 20K	1	
VR703		VRV0109B203	V.RESISTOR 20K	1	
VR704		VRV0109B303	V.RESISTOR 30K	1	
VR705		VRV0109B203	V.RESISTOR 20K	1	
VR801		VRV0109B203	V.RESISTOR 20K	1	
VR803-05		VRV0109B203	V.RESISTOR 20K	3	
VR901		VRV0109B502	V.RESISTOR 5K	1	
X551		VSX0246	CRYSTAL OSCILLATOR	1	
			MISCELLANEOUS		
		VJR0421	PIN	1	
		VML2143	CARD PULLER	1	
		VML2144	CARD PULLER	1	
		VMS4174	PIN	6	
		VMZ1547	BARRIER	1	
		VSC3056	SHIELD CASE	1	
		VXA3966	P.C.B. SHIELD PLATE	1	
		XNG26E	NUT	4	
		XYNV3+K6FR	SCREW	6	
		XYN26+C12	SCREW	4	

Refer to the P.C.BOARDS LIST, page 6-1-1, before using this page.

Ref.No.		Part No.	Part Name & Description	Pcs	Remarks
	■	VEP84095C	P.C.BOARD W/COMPONENT		FOR AU-63-P
			W6 AUDIO		AU-62-P
			CAPACITORS		
C1,C2		ECEA1CU470	E.CAPACITOR 16V 47U	2	
C3		ECEA0JU101	E.CAPACITOR 6.3V 100U	1	
C5		ECEA1CU100	E.CAPACITOR 16V 10U	1	
C6		ECUM1E473KBN	C.CAPACITOR CH 25V 0.047U	1	
C8		ECUM1E104ZFN	C.CAPACITOR CH 25V 0.1U	1	
C9		ECEA1CU100	E.CAPACITOR 16V 10U	1	
C10		ECEA1CN100S	E.CAPACITOR 16V 10U	1	
C11		ECUM1H122KBN	C.CAPACITOR CH 50V 1200P	1	
C12		ECEA1CU100	E.CAPACITOR 16V 10U	1	
C13,14		ECEA1CU470	E.CAPACITOR 16V 47U	2	
C106		ECUM1H470JCN	P.CAPACITOR 50V 47P	1	
C107		ECUM1E104ZFN	C.CAPACITOR CH 25V 0.1U	1	
C108		ECEA1CPZ101	E.CAPACITOR 16V 100U	1	
C109		ECEA1CBZ470	E.CAPACITOR 16V 47U	1	
C110		ECEA1CPZ101	E.CAPACITOR 16V 100U	1	
C111		ECUM1E104ZFN	C.CAPACITOR CH 25V 0.1U	1	
C112,13		ECEA1CPZ101	E.CAPACITOR 16V 100U	2	
C114		ECEA1CBZ100	E.CAPACITOR 16V 10U	1	
C115		ECUM1H220JCN	C.CAPACITOR CH 50V 22P	1	
C116		ECEA1CBZ100	E.CAPACITOR 16V 10U	1	
C120		ECUM1H470JCN	P.CAPACITOR 50V 47P	1	
C121		ECUM1H820JCN	C.CAPACITOR CH 50V 82P	1	
C122		ECUM1H151JCN	C.CAPACITOR CH 50V 150P	1	
C124		ECUM1H470JCN	P.CAPACITOR 50V 47P	1	
C125		ECEA0JPZ471	E.CAPACITOR 6.3V 470U	1	
C127,28		ECEA1CPZ470	E.CAPACITOR 16V 47U	2	
C129		ECQM1H473JF	P.CAPACITOR 50V 0.047U	1	
C131,32		ECEA1CPZ470	E.CAPACITOR 16V 47U	2	
C133		ECUM1H562KBN	C.CAPACITOR CH 50V 5600P	1	
C134,35		ECEA1CBZ100	E.CAPACITOR 16V 10U	2	
C136		ECQP1H472FZ	P.CAPACITOR 50V 4700P	1	
C137		ECEA1CPZ100	E.CAPACITOR 16V 10U	1	
C138		ECQM1H473JF	P.CAPACITOR 50V 0.047U	1	
C139		ECEA1HPZR22	E.CAPACITOR 50V 0.22U	1	
C140,41		ECEA1HPZR68	E.CAPACITOR 50V 0.98U	2	
C142		ECEA1HPZR22	E.CAPACITOR 50V 0.22U	1	
C143		ECQM1H473JF	P.CAPACITOR 50V 0.047U	1	
C144		ECEA1CPZ100	E.CAPACITOR 16V 10U	1	
C145		ECQP1H472FZ	P.CAPACITOR 50V 4700P	1	
C147		ECQP1H103FZ	P.CAPACITOR 50V 0.01U	1	
C148,49		ECQM1H394JF	P.CAPACITOR 50V 0.39U	2	
C306		ECUM1H470JCN	P.CAPACITOR 50V 47P	1	
C307		ECUM1E104ZFN	C.CAPACITOR CH 25V 0.1U	1	
C308		ECEA1CPZ101	E.CAPACITOR 16V 100U	1	
C309		ECEA1CBZ470	E.CAPACITOR 16V 47U	1	
C310		ECEA1CPZ101	E.CAPACITOR 16V 100U	1	
C311		ECUM1E104ZFN	C.CAPACITOR CH 25V 0.1U	1	
C312,13		ECEA1CPZ101	E.CAPACITOR 16V 100U	2	
C314		ECEA1CBZ100	E.CAPACITOR 16V 10U	1	
C315		ECUM1H220JCN	C.CAPACITOR CH 50V 22P	1	
C316		ECEA1CBZ100	E.CAPACITOR 16V 10U	1	
C320		ECUM1H470JCN	P.CAPACITOR 50V 47P	1	
C321		ECUM1H820JCN	C.CAPACITOR CH 50V 82P	1	
C322		ECUM1H151JCN	C.CAPACITOR CH 50V 150P	1	
C324		ECUM1H470JCN	P.CAPACITOR 50V 47P	1	
C325		ECEA0JPZ471	E.CAPACITOR 6.3V 470U	1	
C327,28		ECEA1CPZ470	E.CAPACITOR 16V 47U	2	
C329		ECQM1H473JF	P.CAPACITOR 50V 0.047U	1	
C331,32		ECEA1CPZ470	E.CAPACITOR 16V 47U	2	
C333		ECUM1H562KBN	C.CAPACITOR CH 50V 5600P	1	
C334,35		ECEA1CBZ100	E.CAPACITOR 16V 10U	2	
C336		ECQP1H472FZ	P.CAPACITOR 50V 4700P	1	
C337		ECEA1CPZ100	E.CAPACITOR 16V 10U	1	
C338		ECQM1H473JF	P.CAPACITOR 50V 0.047U	1	

Ref.No.		Part No.	Part Name & Description	Pcs	Remarks
C339		ECEA1HPZR22	E.CAPACITOR 50V 0.22U	1	
C340,41		ECEA1HPZR68	E.CAPACITOR 50V 0.98U	2	
C342		ECEA1HPZR22	E.CAPACITOR 50V 0.22U	1	
C343		ECQM1H473JF	P.CAPACITOR 50V 0.047U	1	
C344		ECEA1CPZ100	E.CAPACITOR 16V 10U	1	
C345		ECQP1H472FZ	P.CAPACITOR 50V 4700P	1	
C347		ECQP1H103FZ	P.CAPACITOR 50V 0.01U	1	
C348,49		ECQM1H394JF	P.CAPACITOR 50V 0.39U	2	
C501		ECEA1CU101	E.CAPACITOR 16V 100U	1	
C503		ECEA1CU220	E.CAPACITOR 16V 22U	1	
C553		ECEA1AU101	E.CAPACITOR 10V 100U	1	
C701		ECEA1CBZ470	E.CAPACITOR 16V 47U	1	
C702		ECUM1H182KBN	C.CAPACITOR CH 50V 1800P	1	
C703		ECUM1H821JCN	C.CAPACITOR CH 50V 820P	1	
C712		ECEA1HPZ4R7	E.CAPACITOR 50V 4.7U	1	
C713		ECEA1HPZ3R3	E.CAPACITOR 50V 3.3U	1	
C714		ECQM1H682JF	P.CAPACITOR 50V 6800P	1	
C715		ECQM1H102JF	P.CAPACITOR 50V 1000P	1	
C716		ECQM1H223JF	P.CAPACITOR 50V 0.022U	1	
C717		ECEA1CPZ100	E.CAPACITOR 16V 10U	1	
C719		ECEA1HPZ4R7	E.CAPACITOR 50V 4.7U	1	
C720		ECEA1CPZ470	E.CAPACITOR 16V 47U	1	
C721		ECQM1H103JF	P.CAPACITOR 50V 0.01U	1	
C722		ECQM1H392JF	P.CAPACITOR 50V 3900P	1	
C723		ECUM1H272KBN	C.CAPACITOR CH 50V 2700P	1	
C724,25		ECUM1H102KBN	C.CAPACITOR CH 50V 1000P	2	
C726		ECEA1CBZ100	E.CAPACITOR 16V 10U	1	
C727		ECEA1CPZ101	E.CAPACITOR 16V 100U	1	
C728		ECUM1E104ZFN	C.CAPACITOR CH 25V 0.1U	1	
C729,30		ECUM1H103KBN	C.CAPACITOR CH 50V 0.01U	2	
C732		ECQM1H223JF	P.CAPACITOR 50V 0.022U	1	
C733		ECUM1H122KBN	C.CAPACITOR CH 50V 1200P	1	
C801		ECEA1CBZ470	E.CAPACITOR 16V 47U	1	
C802		ECUM1H182KBN	C.CAPACITOR CH 50V 1800P	1	
C803		ECUM1H821JCN	C.CAPACITOR CH 50V 820P	1	
C804,05		ECKF1H222KB	C.CAPACITOR 50V 2200P	2	
C812		ECEA1HPZ4R7	E.CAPACITOR 50V 4.7U	1	
C813		ECEA1HPZ3R3	E.CAPACITOR 50V 3.3U	1	
C814		ECQM1H682JF	P.CAPACITOR 50V 6800P	1	
C815		ECQM1H102JF	P.CAPACITOR 50V 1000P	1	
C816		ECQM1H223JF	P.CAPACITOR 50V 0.022U	1	
C817		ECEA1CPZ100	E.CAPACITOR 16V 10U	1	
C819		ECEA1HPZ4R7	E.CAPACITOR 50V 4.7U	1	
C820		ECEA1CPZ470	E.CAPACITOR 16V 47U	1	
C821		ECQM1H103JF	P.CAPACITOR 50V 0.01U	1	
C822		ECQM1H392JF	P.CAPACITOR 50V 3900P	1	
C823		ECUM1H272KBN	C.CAPACITOR CH 50V 2700P	1	
C824,25		ECUM1H102KBN	C.CAPACITOR CH 50V 1000P	2	
C826		ECEA1CBZ100	E.CAPACITOR 16V 10U	1	
C827		ECEA1CPZ101	E.CAPACITOR 16V 100U	1	
C828		ECUM1E104ZFN	C.CAPACITOR CH 25V 0.1U	1	
C829,30		ECUM1H103KBN	C.CAPACITOR CH 50V 0.01U	2	
C832		ECQM1H223JF	P.CAPACITOR 50V 0.022U	1	
C833		ECUM1H122KBN	C.CAPACITOR CH 50V 1200P	1	
C903		ECUM1E104ZFN	C.CAPACITOR CH 25V 0.1U	1	
C904		ECEA1CPZ101	E.CAPACITOR 16V 100U	1	
C905		ECUM1E104ZFN	C.CAPACITOR CH 25V 0.1U	1	
C906,07		ECEA1CPZ101	E.CAPACITOR 16V 100U	2	
C917		ECEA1CPZ100	E.CAPACITOR 16V 10U	1	
C918		ECUM1E104ZFN	C.CAPACITOR CH 25V 0.1U	1	
C919		ECUM1H103KBN	C.CAPACITOR CH 50V 0.01U	1	
C920		ECUM1H151JCN	C.CAPACITOR CH 50V 150P	1	
C921,22		ECUM1H103KBN	C.CAPACITOR CH 50V 0.01U	2	
C923		ECUM1H331JCN	C.CAPACITOR CH 50V 330P	1	
C924		ECEA1HPZ010	E.CAPACITOR 50V 1U	1	
C925		ECQM1H223JF	P.CAPACITOR 50V 0.022U	1	
C926		ECUM1H103KBN	C.CAPACITOR CH 50V 0.01U	1	
C929		ECUM1H151JCN	C.CAPACITOR CH 50V 150P	1	
C930,31		ECUM1H103KBN	C.CAPACITOR CH 50V 0.01U	2	
C932		ECUM1H271JCN	C.CAPACITOR CH 50V 270P	1	
C933		ECUM1H391JCN	C.CAPACITOR CH 50V 390P	1	
C934,35		ECUM1H103KBN	C.CAPACITOR CH 50V 0.01U	2	
C936		ECEA1CU100	E.CAPACITOR 16V 10U	1	
C937		ECUM1E104ZFN	C.CAPACITOR CH 25V 0.1U	1	
C938-40		ECEA1CPZ101	E.CAPACITOR 16V 100U	3	

Refer to the P.C.BOARDS LIST, page 6-1-1, before using this page.

Ref.No.		Part No.	Part Name & Description	Pcs	Remarks
C941		ECEA1HPZ3R3	E.CAPACITOR 50V 3.3U	1	
C942		ECEA1CPZ470	E.CAPACITOR 16V 47U	1	
C944		ECUM1H103KBN	C.CAPACITOR CH 50V 0.01U	1	
C945,46		ECEA1CPZ101	E.CAPACITOR 16V 100U	2	
C947,48		ECEA1HPZ010	E.CAPACITOR 50V 1U	2	
C949		ECUM1E104ZFN	C.CAPACITOR CH 25V 0.1U	1	
C950		ECEA1CPZ101	E.CAPACITOR 16V 100U	1	
D1		MA153	DIODE	1	
D2		MA151K	DIODE	1	
D3,D4		MA3024	DIODE	2	
D7,D8		MA165	DIODE	2	
D501		MA153	DIODE	1	
D502		MA151WA	DIODE	1	
D903		MA151WK	DIODE	1	
FL101		EIR7QH007Q	FILTER	1	
FL102		VLF0829	FILTER	1	
FL103		ELM7Q306A	COIL	1	
FL301		EIR7QH007Q	FILTER	1	
FL302		VLF0829	FILTER	1	
FL303		ELM7Q306A	COIL	1	
FL901		ELB4L053	FILTER	1	
FL902		ELB4M043	FILTER	1	
IC2,C3		UPD4053BG	IC	2	
IC4		NJM4558M	IC	1	
IC5,C6		RC082BM	IC	2	
IC101		AN6558S	IC	1	
IC104		NJM4558M	IC	1	
IC105		TEA0666T	IC	1	
IC106		AN78N09	IC	1	
IC107		AN79N09	IC	1	
IC108		NJM4558M	IC	1	
IC301		AN6558S	IC	1	
IC304		NJM4558M	IC	1	
IC305		TEA0666T	IC	1	
IC306		AN78N09	IC	1	
IC307		AN79N09	IC	1	
IC308		NJM4558M	IC	1	
IC701		NJM4558M	IC	1	
IC703		NJM4558M	IC	1	
IC801		NJM4558M	IC	1	
IC803		NJM4558M	IC	1	
IC805		BA7700K1	IC	1	
IC901		AN78L12	IC	1	
IC902		AN78L05	IC	1	
IC903		AN79L09	IC	1	
IC904		AN78L09	IC	1	
L101,02		VLQEL05F101K	COIL 100UH	2	
L301,02		VLQEL05F101K	COIL 100UH	2	
L552		VLQEL05S471K	COIL 470UH	1	
L906,07		VLQEL05F101K	COIL 100UH	2	
L909		VLQEL05S271J	COIL 270UH	1	
L910-13		VLQEL05F101K	COIL 100UH	4	
P101		VJP1232R	CONNECTOR(MALE) 5P	1	
P301		VJP1232G	CONNECTOR (MALE)	1	
P553		VJP1230T	CONNECTOR(MALE) 3P	1	
Q1		2SD602	TRANSISTOR	1	(Q,R)
Q11		UN2211	TRANSISTOR-RESISTOR	1	

Ref.No.		Part No.	Part Name & Description	Pcs	Remarks
Q12		2SB710	TRANSISTOR	1	
Q107		2SD1328	TRANSISTOR CHIP	1	(Q,R)
Q108		UN2113	TRANSISTOR-RESISTOR	1	
Q114		2SK146	TRANSISTOR	1	(B,L)
Q115		2SD601	TRANSISTOR CHIP	1	(Q,R)
Q116		2SB709	TRANSISTOR CHIP	1	(Q,R)
Q117		2SD601	TRANSISTOR CHIP	1	(Q,R)
Q118-20		UN2213	TRANSISTOR-RESISTOR	3	
Q307		2SD1328	TRANSISTOR CHIP	1	(Q,R)
Q308		UN2113	TRANSISTOR-RESISTOR	1	
Q314		2SK146	TRANSISTOR	1	(B,L)
Q315		2SD601	TRANSISTOR CHIP	1	(Q,R)
Q316		2SB709	TRANSISTOR CHIP	1	(Q,R)
Q317		2SD601	TRANSISTOR CHIP	1	(Q,R)
Q318-20		UN2213	TRANSISTOR-RESISTOR	3	
Q501		2SB709	TRANSISTOR CHIP	1	(Q,R)
Q502		UN2113	TRANSISTOR-RESISTOR	1	
Q503		UN2213	TRANSISTOR-RESISTOR	1	
Q504		2SD601	TRANSISTOR CHIP	1	(Q,R)
Q701		2SD1328	TRANSISTOR CHIP	1	(Q,R)
Q702		2SD601	TRANSISTOR CHIP	1	(Q,R)
Q801		2SD1328	TRANSISTOR CHIP	1	(Q,R)
Q802		2SD601	TRANSISTOR CHIP	1	(Q,R)
Q911		2SD601	TRANSISTOR CHIP	1	(Q,R)
Q912		2SC2404	TRANSISTOR CHIP	1	(B,C)
Q913,14		2SD601	TRANSISTOR CHIP	2	(Q,R)
Q915		2SC2404	TRANSISTOR CHIP	1	(B,C)
Q916,17		2SD601	TRANSISTOR CHIP	2	(Q,R)
Q919		UN2213	TRANSISTOR-RESISTOR	1	
Q920		UN2113	TRANSISTOR-RESISTOR	1	
			RESISTORS		
R1		ERJ6GEYJ102	M.RESISTOR CH 1/10W 1K	1	
R2		ERJ6GEYJ223	M.RESISTOR CH 1/10W 22K	1	
R12		ERJ6GEYJ100	M.RESISTOR CH 1/10W 10	1	
R13		ERJ6GEYJ473	M.RESISTOR CH 1/10W 47K	1	
R14		ERJ6GEYJ102	M.RESISTOR CH 1/10W 1K	1	
R15		ERJ6GEY0R00	M.RESISTOR CH 1/10W 0	1	
R16		ERJ6GEYJ224	M.RESISTOR CH 1/10W 220K	1	
R17		ERJ6GEYJ562	M.RESISTOR CH 1/10W 5.6K	1	
R18		ERJ6GEYJ473	M.RESISTOR CH 1/10W 47K	1	
R19		ERJ6GEYJ331	M.RESISTOR CH 1/10W 330	1	
R20		ERJ6GEYJ473	M.RESISTOR CH 1/10W 47K	1	
R21		ERJ6GEYJ123	M.RESISTOR CH1/10W 12K	1	
R22		ERJ6GEYJ104	M.RESISTOR CH 1/10W 100K	1	
R23		ERJ6GEYJ102	M.RESISTOR CH 1/10W 1K	1	
R24		ERJ6GEYJ470	M.RESISTOR CH 1/10W 47	1	
R25		ERJ6GEYJ332	M.RESISTOR CH 1/10W 3.3K	1	
R26		ERJ6GEYJ473	M.RESISTOR CH 1/10W 47K	1	
R27		ERJ6GEY0R00	M.RESISTOR CH 1/10W 0	1	
R29		ERJ6GEYJ470	M.RESISTOR CH 1/10W 47	1	
R30		ERJ6GEYJ102	M.RESISTOR CH 1/10W 1K	1	
R39		ERJ6GEYJ104	M.RESISTOR CH 1/10W 100K	1	
R42		ERJ6GEYJ223	M.RESISTOR CH 1/10W 22K	1	
R44		ERDS2TJ104	C.RESISTOR 1/4W 100K	1	
R48		ERDS2TJ104	C.RESISTOR 1/4W 100K	1	
R120		ERJ6GEYJ104	M.RESISTOR CH 1/10W 100K	1	
R121		ERJ6GEYJ102	M.RESISTOR CH 1/10W 1K	1	
R122		ERJ6GEYJ103	M.RESISTOR CH 1/10W 10K	1	
R123		ERJ6GEYJ102	M.RESISTOR CH 1/10W 1K	1	
R124		ERJ6GEYG112	M.RESISTOR CH 1/10W 1.1K	1	
R125		ERJ6GEY0R00	M.RESISTOR CH 1/10W 0	1	
R126		ERJ6GEYJ104	M.RESISTOR CH 1/10W 100K	1	
R127		ERJ6GEYJ102	M.RESISTOR CH 1/10W 1K	1	
R128		ERJ6GEYJ123	M.RESISTOR CH1/10W 12K	1	
R129		ERJ6GEYJ104	M.RESISTOR CH 1/10W 100K	1	
R131		ERJ6GEYJ100	M.RESISTOR CH 1/10W 10	1	
R138,39		VRE0034E272	M.RESISTOR CH 1/10W 2.7K	2	
R140		ERJ6GEYJ103	M.RESISTOR CH 1/10W 10K	1	
R141		VRE0034E473	M.RESISTOR CH 1/10W 47K	1	
R142		VRE0034E272	M.RESISTOR CH 1/10W 2.7K	1	
R143		VRE0034E470	M.RESISTOR CH 1/10W 47	1	
R144		VRE0034E104	M.RESISTOR CH 1/10W 100K	1	

Refer to the P.C.BOARDS LIST, page 6-1-1, before using this page.

Ref.No.		Part No.	Part Name & Description	Pcs	Remarks
R145		ERJ6GEYJ102	M.RESISTOR CH 1/10W 1K	1	
R147		ERJ6GEYJ103	M.RESISTOR CH 1/10W 10K	1	
R148,49		ERJ6GEYJ102	M.RESISTOR CH 1/10W 1K	2	
R150		ERJ6GEYJ223	M.RESISTOR CH 1/10W 22K	1	
R151		ERJ6GEYJ102	M.RESISTOR CH 1/10W 1K	1	
R152		ERJ6GEYJ103	M.RESISTOR CH 1/10W 10K	1	
R153		ERJ6GEYJ221	M.RESISTOR CH 1/10W 220	1	
R154		ERJ6GEYJ101	M.RESISTOR CH 1/10W 100	1	
R155		ERJ6GEYJ272	M.RESISTOR CH 1/10W 2.7K	1	
R156		ERJ6GEYJ332	M.RESISTOR CH 1/10W 3.3K	1	
R157		VRE0034E102	M.RESISTOR CH 1/10W 1K	1	
R158		VRE0034E332	M.RESISTOR CH 1/10W 3.3K	1	
R159		ERJ6GEYJ221	M.RESISTOR CH 1/10W 220	1	
R160		VRE0034E823	M.RESISTOR CH 1/10W 82K	1	
R161		VRE0034E333	M.RESISTOR CH 1/10W 33K	1	
R162		VRE0034E823	M.RESISTOR CH 1/10W 82K	1	
R164		VRE0034E683	M.RESISTOR CH 1/10W 68K	1	
R165		VRE0034E222	M.RESISTOR CH 1/10W 2.2K	1	
R166		VRE0034E512	M.RESISTOR CH 1/10W 5.1K	1	
R167		VRE0034E822	M.RESISTOR CH 1/10W 8.2K	1	
R168		VRE0034E203	M.RESISTOR CH 1/10W 20K	1	
R320		ERJ6GEYJ104	M.RESISTOR CH 1/10W 100K	1	
R321		ERJ6GEYJ102	M.RESISTOR CH 1/10W 1K	1	
R322		ERJ6GEYJ103	M.RESISTOR CH 1/10W 10K	1	
R323		ERJ6GEYJ102	M.RESISTOR CH 1/10W 1K	1	
R324		ERJ6GEYG112	M.RESISTOR CH 1/10W 1.1K	1	
R325		ERJ6GEY0R00	M.RESISTOR CH 1/10W 0	1	
R326		ERJ6GEYJ104	M.RESISTOR CH 1/10W 100K	1	
R327		ERJ6GEYJ102	M.RESISTOR CH 1/10W 1K	1	
R328		ERJ6GEYJ123	M.RESISTOR CH1/10W 12K	1	
R329		ERJ6GEYJ104	M.RESISTOR CH 1/10W 100K	1	
R331		ERJ6GEYJ100	M.RESISTOR CH 1/10W 10	1	
R338,39		VRE0034E272	M.RESISTOR CH 1/10W 2.7K	2	
R340		ERJ6GEYJ103	M.RESISTOR CH 1/10W 10K	1	
R341		VRE0034E473	M.RESISTOR CH 1/10W 47K	1	
R342		VRE0034E272	M.RESISTOR CH 1/10W 2.7K	1	
R343		VRE0034E470	M.RESISTOR CH 1/10W 47	1	
R344		VRE0034E104	M.RESISTOR CH 1/10W 100K	1	
R345		ERJ6GEYJ102	M.RESISTOR CH 1/10W 1K	1	
R347		ERJ6GEYJ103	M.RESISTOR CH 1/10W 10K	1	
R348,49		ERJ6GEYJ102	M.RESISTOR CH 1/10W 1K	2	
R350		ERJ6GEYJ223	M.RESISTOR CH 1/10W 22K	1	
R351		ERJ6GEYJ102	M.RESISTOR CH 1/10W 1K	1	
R352		ERJ6GEYJ103	M.RESISTOR CH 1/10W 10K	1	
R353		ERJ6GEYJ221	M.RESISTOR CH 1/10W 220	1	
R354		ERJ6GEYJ101	M.RESISTOR CH 1/10W 100	1	
R355		ERJ6GEYJ272	M.RESISTOR CH 1/10W 2.7K	1	
R356		ERJ6GEYJ332	M.RESISTOR CH 1/10W 3.3K	1	
R357		VRE0034E102	M.RESISTOR CH 1/10W 1K	1	
R358		VRE0034E332	M.RESISTOR CH 1/10W 3.3K	1	
R359		ERJ6GEYJ221	M.RESISTOR CH 1/10W 220	1	
R360		VRE0034E823	M.RESISTOR CH 1/10W 82K	1	
R361		VRE0034E333	M.RESISTOR CH 1/10W 33K	1	
R362		VRE0034E823	M.RESISTOR CH 1/10W 82K	1	
R364		VRE0034E683	M.RESISTOR CH 1/10W 68K	1	
R365		VRE0034E222	M.RESISTOR CH 1/10W 2.2K	1	
R366		VRE0034E512	M.RESISTOR CH 1/10W 5.1K	1	
R367		VRE0034E822	M.RESISTOR CH 1/10W 8.2K	1	
R368		VRE0034E203	M.RESISTOR CH 1/10W 20K	1	
R501		ERJ6GEYJ103	M.RESISTOR CH 1/10W 10K	1	
R502,03		ERJ6GEYJ223	M.RESISTOR CH 1/10W 22K	2	
R508		ERJ6GEYJ103	M.RESISTOR CH 1/10W 10K	1	
R509		ERJ6GEYJ223	M.RESISTOR CH 1/10W 22K	1	
R510		ERJ6GEYJ273	M.RESISTOR CH1/10W 27K	1	
R511		ERJ6GEYJ103	M.RESISTOR CH 1/10W 10K	1	
R701		ERJ6GEYJ104	M.RESISTOR CH 1/10W 100K	1	
R702,03		ERJ6GEYJ332	M.RESISTOR CH 1/10W 3.3K	2	
R704		ERJ6GEYJ102	M.RESISTOR CH 1/10W 1K	1	
R705		ERJ6GEYJ272	M.RESISTOR CH 1/10W 2.7K	1	
R706		ERJ6GEYJ102	M.RESISTOR CH 1/10W 1K	1	
R707		ERJ6GEYJ104	M.RESISTOR CH 1/10W 100K	1	
R709		ERJ6GEYJ472	M.RESISTOR CH 1/10W 4.7K	1	
R710		ERJ6GEYJ682	M.RESISTOR CH 1/10W 6.8K	1	
R728,29		ERJ6GEYJ821	M.RESISTOR CH 1/10W 820	2	
R730		ERJ6GEYJ681	M.RESISTOR CH 1/10W 680	1	

Ref.No.		Part No.	Part Name & Description	Pcs	Remarks
R731		ERJ6GEY0R00	M.RESISTOR CH 1/10W 0	1	
R732		ERJ6GEYG112	M.RESISTOR CH 1/10W 1.1K	1	
R733		ERJ6GEYJ103	M.RESISTOR CH 1/10W 10K	1	
R734		ERJ6GEYJ183	M.RESISTOR CH 1/10W 18K	1	
R735		ERJ6GEYJ562	M.RESISTOR CH 1/10W 5.6K	1	
R736		ERJ6GEYJ104	M.RESISTOR CH 1/10W 100K	1	
R737,38		ERJ6GEYJ122	M.RESISTOR CH1/10W 1.2K	2	
R739		VRE0034E362	M.RESISTOR CH 1/10W 3.6K	1	
R740		ERJ6GEYJ122	M.RESISTOR CH1/10W 1.2K	1	
R741,42		ERJ6GEYJ103	M.RESISTOR CH 1/10W 10K	2	
R743		ERJ6GEYJ561	M.RESISTOR CH 1/10W 560	1	
R744		ERJ6GEYJ473	M.RESISTOR CH 1/10W 47K	1	
R745		ERJ6GEYJ563	M.RESISTOR CH 1/10W 56K	1	
R801		ERJ6GEYJ104	M.RESISTOR CH 1/10W 100K	1	
R802,03		ERJ6GEYJ332	M.RESISTOR CH 1/10W 3.3K	2	
R804		ERJ6GEYJ102	M.RESISTOR CH 1/10W 1K	1	
R805		ERJ6GEYJ272	M.RESISTOR CH 1/10W 2.7K	1	
R806		ERJ6GEYJ102	M.RESISTOR CH 1/10W 1K	1	
R807		ERJ6GEYJ104	M.RESISTOR CH 1/10W 100K	1	
R809		ERJ6GEYJ472	M.RESISTOR CH 1/10W 4.7K	1	
R810		ERJ6GEYJ682	M.RESISTOR CH 1/10W 6.8K	1	
R828,29		ERJ6GEYJ821	M.RESISTOR CH 1/10W 820	2	
R830		ERJ6GEYJ681	M.RESISTOR CH 1/10W 680	1	
R831		ERJ6GEY0R00	M.RESISTOR CH 1/10W 0	1	
R832		ERJ6GEYG112	M.RESISTOR CH 1/10W 1.1K	1	
R833		ERJ6GEYJ103	M.RESISTOR CH 1/10W 10K	1	
R834		ERJ6GEYJ183	M.RESISTOR CH 1/10W 18K	1	
R835		ERJ6GEYJ562	M.RESISTOR CH 1/10W 5.6K	1	
R836		ERJ6GEYJ104	M.RESISTOR CH 1/10W 100K	1	
R837,38		ERJ6GEYJ122	M.RESISTOR CH1/10W 1.2K	2	
R839		VRE0034E362	M.RESISTOR CH 1/10W 3.6K	1	
R840		ERJ6GEYJ122	M.RESISTOR CH1/10W 1.2K	1	
R841,42		ERJ6GEYJ103	M.RESISTOR CH 1/10W 10K	2	
R843		ERJ6GEYJ561	M.RESISTOR CH 1/10W 560	1	
R844		ERJ6GEYJ473	M.RESISTOR CH 1/10W 47K	1	
R845		VRE0034E303	M.RESISTOR CH 1/10W 30K	1	#R
R914		ERJ6GEYJ104	M.RESISTOR CH 1/10W 100K	1	
R917,18		ERJ6GEYJ561	M.RESISTOR CH 1/10W 560	2	
R919,20		ERJ6GEYJ222	M.RESISTOR CH 1/10W 2.2K	2	
R921		VRE0034E223	M.RESISTOR CH 1/10W 22K	1	
R922,23		ERJ6GEYJ104	M.RESISTOR CH 1/10W 100K	2	
R924		ERJ6GEYJ393	M.RESISTOR CH 1/10W 39K	1	
R925		ERJ6GEYJ123	M.RESISTOR CH1/10W 12K	1	
R926		ERJ6GEYJ334	M.RESISTOR CH 1/10W 330K	1	
R927		ERJ6GEYJ103	M.RESISTOR CH 1/10W 10K	1	
R928		ERJ6GEYJ104	M.RESISTOR CH 1/10W 100K	1	
R933		ERJ6GEYJ392	M.RESISTOR CH 1/10W 3.9K	1	
R939		ERJ6GEYJ102	M.RESISTOR CH 1/10W 1K	1	
R940		ERJ6GEYJ560	M.RESISTOR CH 1/10W 56	1	
R941		ERJ6GEYJ392	M.RESISTOR CH 1/10W 3.9K	1	
R942		ERJ6GEYJ102	M.RESISTOR CH 1/10W 1K	1	
R943		ERJ6GEYJ222	M.RESISTOR CH 1/10W 2.2K	1	
R944		ERJ6GEYJ823	M.RESISTOR CH 1/10W 82K	1	
R945		ERJ6GEYJ273	M.RESISTOR CH1/10W 27K	1	
R946-48		ERJ6GEYJ102	M.RESISTOR CH 1/10W 1K	3	
R949		ERJ6GEYJ390	M.RESISTOR CH 1/10W 39	1	
R950		ERJ6GEYJ392	M.RESISTOR CH 1/10W 3.9K	1	
R951		ERJ6GEYJ102	M.RESISTOR CH 1/10W 1K	1	
R952		ERJ6GEYJ222	M.RESISTOR CH 1/10W 2.2K	1	
R953		ERJ6GEYJ823	M.RESISTOR CH 1/10W 82K	1	
R954		ERJ6GEYJ273	M.RESISTOR CH1/10W 27K	1	
R955,56		ERJ6GEYJ102	M.RESISTOR CH 1/10W 1K	2	
R957		ERJ6GEYJ222	M.RESISTOR CH 1/10W 2.2K	1	
R958		ERJ6GEYJ823	M.RESISTOR CH 1/10W 82K	1	
R959		ERJ6GEYJ273	M.RESISTOR CH1/10W 27K	1	
R960		ERJ6GEYJ101	M.RESISTOR CH 1/10W 100	1	
R961		ERJ6GEYJ103	M.RESISTOR CH 1/10W 10K	1	
R963		ERJ6GEYJ560	M.RESISTOR CH 1/10W 56	1	
SW101		VSS023703	SWITCH	1	
SW301		VSS023703	SWITCH	1	

Refer to the P.C.BOARDS LIST, page 6-1-1, before using this page.

Ref.No.		Part No.	Part Name & Description	Pcs	Remarks
TP1		VJR0582	PACK PIN	1	
TP101		VJR0582	PACK PIN	1	
TP301		VJR0582	PACK PIN	1	
TP702,03		VJR0582	PACK PIN	2	
TP802,03		VJR0582	PACK PIN	2	
TP901		VJR0582	PACK PIN	1	
TPG101		VJR0582	PACK PIN	1	
TPG301		VJR0582	PACK PIN	1	
TPG901		VJR0582	PACK PIN	1	
VR102		ERDS2TJ821	C.RESISTOR 1/4W 820	1	
VR103		VRV0109B502	V.RESISTOR 5K	1	
VR302		ERDS2TJ821	C.RESISTOR 1/4W 820	1	
VR303		VRV0109B502	V.RESISTOR 5K	1	
VR703		VRV0109B203	V.RESISTOR 20K	1	
VR704		VRV0109B103	V.RESISTOR 10K	1	
VR803		VRV0109B203	V.RESISTOR 20K	1	
VR804		VRV0109B502	V.RESISTOR 5K	1	
			MISCELLANEOUS		
		VML2143	CARD PULLER	1	
		VML2144	CARD PULLER	1	
		VMS4174	PIN	6	
		VMZ1547	BARRIER	1	
		VSC3056	PIN	1	
		VXA3966	P.C.B. SHIELD PLATE	1	
		XNG26E	NUT	4	
		XYNV3+K6FR	SCREW	6	
		XYN26+C12	SCREW	4	

Refer to the P.C.BOARDS LIST, page 6-1-1, before using this page.

Ref.No.		Part No.	Part Name & Description	Pcs	Remarks
	■	VEP84095D	P.C.BOARD W/COMPONENT		FOR AU-65-E,B
			W6 AUDIO		
	■	VEP80635A	P.C.BOARD W/COMPONENT		
			W6S TC TRAP SUB		
			CAPACITORS		
C1,C2		ECEA1CU470	E.CAPACITOR 16V 47U	2	
C3		ECEA0JU101	E.CAPACITOR 6.3V 100U	1	
C4		ECUM1E104ZFN	C.CAPACITOR CH 25V 0.1U	1	
C5		ECEA1CU100	E.CAPACITOR 16V 10U	1	
C6		ECUM1E473KBN	C.CAPACITOR CH 25V 0.047U	1	
C7		ECUM1H222KBN	C.CAPACITOR CH 50V 2200P	1	
C8		ECUM1E104ZFN	C.CAPACITOR CH 25V 0.1U	1	
C9		ECEA1CU100	E.CAPACITOR 16V 10U	1	
C10		ECEA1CN100S	E.CAPACITOR 16V 10U	1	
C11		ECUM1H272KBN	C.CAPACITOR CH 50V 2700P	1	
C12		ECEA1CU100	E.CAPACITOR 16V 10U	1	
C13,14		ECEA1CU470	E.CAPACITOR 16V 47U	2	
C17		ECUM1H822KBN	C.CAPACITOR CH 50V 8200P	1	
C101		ECUM1H220JCN	C.CAPACITOR CH 50V 22P	1	
C102		ECEA1CBZ100	E.CAPACITOR 16V 10U	1	
C103		ECUM1H470JCN	C.CAPACITOR CH 50V 47P	1	
C104		ECEA1CBZ100	E.CAPACITOR 16V 10U	1	
C105		ECEA1CPZ470	E.CAPACITOR 16V 47U	1	
C106		ECUM1H470JCN	C.CAPACITOR CH 50V 47P	1	
C107		ECUM1E104ZFN	C.CAPACITOR CH 25V 0.1U	1	
C108		ECEA1CPZ101	E.CAPACITOR 16V 100U	1	
C109		ECEA1CBZ470	E.CAPACITOR 16V 47U	1	
C110		ECEA1CPZ101	E.CAPACITOR 16V 100U	1	
C111		ECUM1E104ZFN	C.CAPACITOR CH 25V 0.1U	1	
C112,13		ECEA1CPZ101	E.CAPACITOR 16V 100U	2	
C114		ECEA1CBZ100	E.CAPACITOR 16V 10U	1	
C115		ECUM1H220JCN	C.CAPACITOR CH 50V 22P	1	
C116,17		ECEA1CBZ100	E.CAPACITOR 16V 10U	2	
C118		ECEA1CPZ470	E.CAPACITOR 16V 47U	1	
C120		ECUM1H470JCN	C.CAPACITOR CH 50V 47P	1	
C121		ECUM1H820JCN	C.CAPACITOR CH 50V 82P	1	
C122		ECUM1H151JCN	C.CAPACITOR CH 50V 150P	1	
C124		ECUM1H470JCN	C.CAPACITOR CH 50V 47P	1	
C125		ECEA0JPZ471	E.CAPACITOR 6.3V 470U	1	
C127,28		ECEA1CPZ470	E.CAPACITOR 16V 47U	2	
C129		ECQM1H473JF	P.CAPACITOR 50V 0.047U	1	
C130		ECUM1H331JCN	C.CAPACITOR CH 50V 330P	1	
C131,32		ECEA1CPZ470	E.CAPACITOR 16V 47U	2	
C133		ECUM1H562KBN	C.CAPACITOR CH 50V 5600P	1	
C134,35		ECEA1CBZ100	E.CAPACITOR 16V 10U	2	
C136		ECQP1H472FZ	P.CAPACITOR 50V 4700P	1	
C137		ECEA1CPZ100	E.CAPACITOR 16V 10U	1	
C138		ECQM1H473JF	P.CAPACITOR 50V 0.047U	1	
C139		ECEA1HPZR22	E.CAPACITOR 50V 0.22U	1	
C140,41		ECEA1HPZR68	E.CAPACITOR 50V 0.98U	2	
C142		ECEA1HPZR22	E.CAPACITOR 50V 0.22U	1	
C143		ECQM1H473JF	P.CAPACITOR 50V 0.047U	1	
C144		ECEA1CPZ100	E.CAPACITOR 16V 10U	1	
C145		ECQP1H472FZ	P.CAPACITOR 50V 4700P	1	
C146		ECEA1CBZ100	E.CAPACITOR 16V 10U	1	
C147		ECQP1H103FZ	P.CAPACITOR 50V 0.01U	1	
C148,49		ECQM1H394JF	P.CAPACITOR 50V 0.39U	2	
C201		ECUM1H391JCN	C.CAPACITOR CH 50V 390P	1	
C202		ECEA1CBZ100	E.CAPACITOR 16V 10U	1	
C203		ECUM1H272KBN	C.CAPACITOR CH 50V 2700P	1	
C204,05		ECEA1CBZ100	E.CAPACITOR 16V 10U	2	
C206		ECEA1CBZ470	E.CAPACITOR 16V 47U	1	
C207		ECUM1H682KBN	C.CAPACITOR CH 50V 6800P	1	
C208		ECQM1H473JF	P.CAPACITOR 50V 0.047U	1	
C209		ECEA1CBZ100	E.CAPACITOR 16V 10U	1	
C210		ECQM1H394JF	P.CAPACITOR 50V 0.39U	1	
C211		ECUM1H222KBN	C.CAPACITOR CH 50V 2200P	1	
C212		ECUM1H472KBN	C.CAPACITOR CH 50V 4700P	1	
C213		ECUM1H682KBN	C.CAPACITOR CH 50V 6800P	1	

Ref.No.		Part No.	Part Name & Description	Pcs	Remarks
C214		ECUM1H103KBN	C.CAPACITOR CH 50V 0.01U	1	
C215		ECUM1E153KBN	C.CAPACITOR CH 25V 0.015U	1	
C216		ECEA1CBZ100	E.CAPACITOR 16V 10U	1	
C217		ECUM1H152KBN	C.CAPACITOR CH 50V 1500P	1	
C218		ECUM1H122KBN	C.CAPACITOR CH 50V 1200P	1	
C219		ECUM1H152KBN	C.CAPACITOR CH 50V 1500P	1	
C220		ECUM1H102KBN	C.CAPACITOR CH 50V 1000P	1	
C301		ECUM1H220JCN	C.CAPACITOR CH 50V 22P	1	
C302		ECEA1CBZ100	E.CAPACITOR 16V 10U	1	
C303		ECUM1H470JCN	C.CAPACITOR CH 50V 47P	1	
C304		ECEA1CBZ100	E.CAPACITOR 16V 10U	1	
C305		ECEA1CPZ470	E.CAPACITOR 16V 47U	1	
C306		ECUM1H470JCN	C.CAPACITOR CH 50V 47P	1	
C307		ECUM1E104ZFN	C.CAPACITOR CH 25V 0.1U	1	
C308		ECEA1CPZ101	E.CAPACITOR 16V 100U	1	
C309		ECEA1CBZ470	E.CAPACITOR 16V 47U	1	
C310		ECEA1CPZ101	E.CAPACITOR 16V 100U	1	
C311		ECUM1E104ZFN	C.CAPACITOR CH 25V 0.1U	1	
C312,13		ECEA1CPZ101	E.CAPACITOR 16V 100U	2	
C314		ECEA1CBZ100	E.CAPACITOR 16V 10U	1	
C315		ECUM1H220JCN	C.CAPACITOR CH 50V 22P	1	
C316,17		ECEA1CBZ100	E.CAPACITOR 16V 10U	2	
C318		ECEA1CPZ470	E.CAPACITOR 16V 47U	1	
C320		ECUM1H470JCN	C.CAPACITOR CH 50V 47P	1	
C321		ECUM1H820JCN	C.CAPACITOR CH 50V 82P	1	
C322		ECUM1H151JCN	C.CAPACITOR CH 50V 150P	1	
C324		ECUM1H470JCN	C.CAPACITOR CH 50V 47P	1	
C325		ECEA0JPZ471	E.CAPACITOR 6.3V 470U	1	
C327,28		ECEA1CPZ470	E.CAPACITOR 16V 47U	2	
C329		ECQM1H473JF	P.CAPACITOR 50V 0.047U	1	
C330		ECUM1H331JCN	C.CAPACITOR CH 50V 330P	1	
C331,32		ECEA1CPZ470	E.CAPACITOR 16V 47U	2	
C333		ECUM1H562KBN	C.CAPACITOR CH 50V 5600P	1	
C334,35		ECEA1CBZ100	E.CAPACITOR 16V 10U	2	
C336		ECQP1H472FZ	P.CAPACITOR 50V 4700P	1	
C337		ECEA1CPZ100	E.CAPACITOR 16V 10U	1	
C338		ECQM1H473JF	P.CAPACITOR 50V 0.047U	1	
C339		ECEA1HPZR22	E.CAPACITOR 50V 0.22U	1	
C340,41		ECEA1HPZR68	E.CAPACITOR 50V 0.98U	2	
C342		ECEA1HPZR22	E.CAPACITOR 50V 0.22U	1	
C343		ECQM1H473JF	P.CAPACITOR 50V 0.047U	1	
C344		ECEA1CPZ100	E.CAPACITOR 16V 10U	1	
C345		ECQP1H472FZ	P.CAPACITOR 50V 4700P	1	
C346		ECEA1CBZ100	E.CAPACITOR 16V 10U	1	
C347		ECQP1H103FZ	P.CAPACITOR 50V 0.01U	1	
C348,49		ECQM1H394JF	P.CAPACITOR 50V 0.39U	2	
C401		ECUM1H391JCN	C.CAPACITOR CH 50V 390P	1	
C402		ECEA1CBZ100	E.CAPACITOR 16V 10U	1	
C403		ECUM1H272KBN	C.CAPACITOR CH 50V 2700P	1	
C404,05		ECEA1CBZ100	E.CAPACITOR 16V 10U	2	
C406		ECEA1CBZ470	E.CAPACITOR 16V 47U	1	
C407		ECUM1H682KBN	C.CAPACITOR CH 50V 6800P	1	
C408		ECQM1H473JF	P.CAPACITOR 50V 0.047U	1	
C409		ECEA1CBZ100	E.CAPACITOR 16V 10U	1	
C410		ECQM1H394JF	P.CAPACITOR 50V 0.39U	1	
C411		ECUM1H222KBN	C.CAPACITOR CH 50V 2200P	1	
C412		ECUM1H472KBN	C.CAPACITOR CH 50V 4700P	1	
C413		ECUM1H682KBN	C.CAPACITOR CH 50V 6800P	1	
C414		ECUM1H103KBN	C.CAPACITOR CH 50V 0.01U	1	
C415		ECUM1E153KBN	C.CAPACITOR CH 25V 0.015U	1	
C416		ECEA1CBZ100	E.CAPACITOR 16V 10U	1	
C417		ECUM1H152KBN	C.CAPACITOR CH 50V 1500P	1	
C418		ECUM1H122KBN	C.CAPACITOR CH 50V 1200P	1	
C419		ECUM1H152KBN	C.CAPACITOR CH 50V 1500P	1	
C420		ECUM1H102KBN	C.CAPACITOR CH 50V 1000P	1	
C501		ECEA1CU101	E.CAPACITOR 16V 100U	1	
C503		ECEA1CU220	E.CAPACITOR 16V 22U	1	
C551		ECUM1E104ZFN	C.CAPACITOR CH 25V 0.1U	1	
C553		ECEA1AU101	E.CAPACITOR 10V 100U	1	
C554,55		ECUM1E104ZFN	C.CAPACITOR CH 25V 0.1U	2	
C556		ECEA1VU101	E.CAPACITOR 35V 100U	1	
C557		ECEA1EU101	E.CAPACITOR 25V 100U	1	
C558		ECQM1H104JF	P.CAPACITOR 50V 0.1U	1	
C559,60		ECUM1H103KBN	C.CAPACITOR CH 50V 0.01U	2	
C561		ECEA1EU100	E.CAPACITOR 25V 10U	1	

Refer to the P.C.BOARDS LIST, page 6-1-1, before using this page.

Ref.No.		Part No.	Part Name & Description	Pcs	Remarks
C562		ECCD2H181J	C.CAPACITOR 500V 180P	1	
C563		ECCD2H271J	C.CAPACITOR 500V 270P	1	
C564		ECQM1H104JF	P.CAPACITOR 50V 0.1U	1	
C565,66		ECUM1H103KBN	C.CAPACITOR CH 50V 0.01U	2	
C567		ECEA1EU100	E.CAPACITOR 25V 10U	1	
C568		ECCD2H181J	C.CAPACITOR 500V 180P	1	
C569		ECCD2H271J	C.CAPACITOR 500V 270P	1	
C570		ECQM1H104JF	P.CAPACITOR 50V 0.1U	1	
C571-73		ECUM1H103KBN	C.CAPACITOR CH 50V 0.01U	3	
C574		ECEA1EU100	E.CAPACITOR 25V 10U	1	
C575		ECQM1H104JF	P.CAPACITOR 50V 0.1U	1	
C576		VCF2JAB182JE	P.CAPACITOR V	1	
C577		ECQM1H104JF	P.CAPACITOR 50V 0.1U	1	
C578-80		ECUM1H103KBN	C.CAPACITOR CH 50V 0.01U	3	
C581		ECEA1EU100	E.CAPACITOR 25V 10U	1	
C582		ECQM1H104JF	P.CAPACITOR 50V 0.1U	1	
C583		VCF2JAB182JE	P.CAPACITOR V	1	
C584		ECQM1H104JF	P.CAPACITOR 50V 0.1U	1	
C585,86		ECUM1H103KBN	C.CAPACITOR CH 50V 0.01U	2	
C587		ECEA1EU100	E.CAPACITOR 25V 10U	1	
C588		VCF2JAB102JE	P.CAPACITOR V	1	
C589		ECCD2H680K	C.CAPACITOR 500V 68P	1	
C590		ECEA1AU470	E.CAPACITOR 10V 47U	1	
C591		ECQM1H104JF	P.CAPACITOR 50V 0.1U	1	
C592-94		ECUM1H103KBN	C.CAPACITOR CH 50V 0.01U	3	
C595		ECEA1EU100	E.CAPACITOR 25V 10U	1	
C596		VCF2JAB222JE	P.CAPACITOR V	1	
C597		ECUM1E104ZFN	C.CAPACITOR CH 25V 0.1U	1	
C598,99		ECUM1H103KBN	C.CAPACITOR CH 50V 0.01U	2	
C600		ECEA1EU100	E.CAPACITOR 25V 10U	1	
C601		VCF2JAB222JE	P.CAPACITOR V	1	
C602		ECUM1E104ZFN	C.CAPACITOR CH 25V 0.1U	1	
C603,04		ECUM1H103KBN	C.CAPACITOR CH 50V 0.01U	2	
C605		ECEA1EU100	E.CAPACITOR 25V 10U	1	
C606		VCF2JAB222JE	P.CAPACITOR V	1	
C607,08		ECUM1H330JCN	C.CAPACITOR CH 50V 33P	2	
C609		ECEA1HU3R3	E.CAPACITOR 50V 3.3U	1	
C610-12		ECUM1H331JCN	C.CAPACITOR CH 50V 330P	3	
C701		ECEA1CB2470	E.CAPACITOR 16V 47U	1	
C702		ECUM1H182KBN	C.CAPACITOR CH 50V 1800P	1	
C703		ECUM1H821JCN	C.CAPACITOR CH 50V 820P	1	
C712		ECEA1HPZ4R7	E.CAPACITOR 50V 4.7U	1	
C713		ECEA1HPZ3R3	E.CAPACITOR 50V 3.3U	1	
C714		ECQM1H682JF	P.CAPACITOR 50V 6800P	1	
C715		ECQM1H102JF	P.CAPACITOR 50V 1000P	1	
C716		ECQM1H223JF	P.CAPACITOR 50V 0.022U	1	
C717		ECEA1CPZ100	E.CAPACITOR 16V 10U	1	
C719		ECEA1HPZ4R7	E.CAPACITOR 50V 4.7U	1	
C720		ECEA1CPZ470	E.CAPACITOR 16V 47U	1	
C721		ECQM1H103JF	P.CAPACITOR 50V 0.01U	1	
C722		ECQM1H332JF	P.CAPACITOR 50V 3300P	1	
C723		ECUM1H272KBN	C.CAPACITOR CH 50V 2700P	1	
C724,25		ECUM1H102KBN	C.CAPACITOR CH 50V 1000P	2	
C726		ECEA1CBZ100	E.CAPACITOR 16V 10U	1	
C727		ECEA1CPZ101	E.CAPACITOR 16V 100U	1	
C728		ECUM1E104ZFN	C.CAPACITOR CH 25V 0.1U	1	
C729,30		ECUM1H103KBN	C.CAPACITOR CH 50V 0.01U	2	
C731		ECEA1HPZ4R7	E.CAPACITOR 50V 4.7U	1	
C732		ECQM1H223JF	P.CAPACITOR 50V 0.022U	1	
C733		ECUM1H122KBN	C.CAPACITOR CH 50V 1200P	1	
C801		ECEA1CB2470	E.CAPACITOR 16V 47U	1	
C802		ECUM1H182KBN	C.CAPACITOR CH 50V 1800P	1	
C803		ECUM1H821JCN	C.CAPACITOR CH 50V 820P	1	
C804,05		ECUM1H222KBN	C.CAPACITOR CH 50V 2200P	2	
C812		ECEA1HPZ4R7	E.CAPACITOR 50V 4.7U	1	
C813		ECEA1HPZ3R3	E.CAPACITOR 50V 3.3U	1	
C814		ECQM1H682JF	P.CAPACITOR 50V 6800P	1	
C815		ECQM1H102JF	P.CAPACITOR 50V 1000P	1	
C816		ECQM1H223JF	P.CAPACITOR 50V 0.022U	1	
C817		ECEA1CPZ100	E.CAPACITOR 16V 10U	1	
C819		ECEA1HPZ4R7	E.CAPACITOR 50V 4.7U	1	
C820		ECEA1CPZ470	E.CAPACITOR 16V 47U	1	
C821		ECQM1H103JF	P.CAPACITOR 50V 0.01U	1	
C822		ECQM1H332JF	P.CAPACITOR 50V 3300P	1	
C823		ECUM1H272KBN	C.CAPACITOR CH 50V 2700P	1	

Ref.No.		Part No.	Part Name & Description	Pcs	Remarks
C824,25		ECUM1H102KBN	C.CAPACITOR CH 50V 1000P	2	
C826		ECEA1CBZ100	E.CAPACITOR 16V 10U	1	
C827		ECEA1CPZ101	E.CAPACITOR 16V 100U	1	
C828		ECUM1E104ZFN	C.CAPACITOR CH 25V 0.1U	1	
C829,30		ECUM1H103KBN	C.CAPACITOR CH 50V 0.01U	2	
C831		ECEA1HPZ4R7	E.CAPACITOR 50V 4.7U	1	
C832		ECQM1H223JF	P.CAPACITOR 50V 0.022U	1	
C833		ECUM1H122KBN	C.CAPACITOR CH 50V 1200P	1	
C902		ECEA1AU470	E.CAPACITOR 10V 47U	1	
C903		ECUM1E104ZFN	C.CAPACITOR CH 25V 0.1U	1	
C904		ECEA1CPZ101	E.CAPACITOR 16V 100U	1	
C905		ECUM1E104ZFN	C.CAPACITOR CH 25V 0.1U	1	
C906,07		ECEA1CPZ101	E.CAPACITOR 16V 100U	2	
C908		ECUM1E104ZFN	C.CAPACITOR CH 25V 0.1U	1	
C909		ECEA1CPZ101	E.CAPACITOR 16V 100U	1	
C910-12		ECUM1H101JCN	C.CAPACITOR CH 50V 100P	3	
C913-15		ECUM1H151JCN	C.CAPACITOR CH 50V 150P	3	
C916		ECUM1H103KBN	C.CAPACITOR CH 50V 0.01U	1	
C917		ECEA1CPZ100	E.CAPACITOR 16V 10U	1	
C918		ECUM1E104ZFN	C.CAPACITOR CH 25V 0.1U	1	
C920		ECUM1H151JCN	C.CAPACITOR CH 50V 150P	1	
C921,22		ECUM1H103KBN	C.CAPACITOR CH 50V 0.01U	2	
C923		ECUM1H331JCN	C.CAPACITOR CH 50V 330P	1	
C924		ECEA1HPZ010	E.CAPACITOR 50V 1U	1	
C925		ECQM1H223JF	P.CAPACITOR 50V 0.022U	1	
C926		ECUM1H103KBN	C.CAPACITOR CH 50V 0.01U	1	
C929		ECUM1H151JCN	C.CAPACITOR CH 50V 150P	1	
C930,31		ECUM1H103KBN	C.CAPACITOR CH 50V 0.01U	2	
C932		ECUM1H271JCN	C.CAPACITOR CH 50V 270P	1	
C933		ECUM1H391JCN	C.CAPACITOR CH 50V 390P	1	
C934,35		ECUM1H103KBN	C.CAPACITOR CH 50V 0.01U	2	
C936		ECEA1CU100	E.CAPACITOR 16V 10U	1	
C937		ECUM1E104ZFN	C.CAPACITOR CH 25V 0.1U	1	
C938-40		ECEA1CPZ101	E.CAPACITOR 16V 100U	3	
C941		ECEA1HPZ3R3	E.CAPACITOR 50V 3.3U	1	
C942		ECEA1CPZ470	E.CAPACITOR 16V 47U	1	
C944		ECUM1H103KBN	C.CAPACITOR CH 50V 0.01U	1	
C945,46		ECEA1CPZ101	E.CAPACITOR 16V 100U	2	
C947,48		ECEA1HPZ010	E.CAPACITOR 50V 1U	2	
C949		ECUM1E104ZFN	C.CAPACITOR CH 25V 0.1U	1	
C950		ECEA1CPZ101	E.CAPACITOR 16V 100U	1	
D1		MA153	DIODE	1	
D2		MA151K	DIODE	1	
D3,D4		MA3024	DIODE	2	
D101		MA151K	DIODE	1	
D301		MA151K	DIODE	1	
D501		MA153	DIODE	1	
D502		MA151WA	DIODE	1	
D552-57		MA153	DIODE	6	
D558-60		MA3100	DIODE	3	
D561-64		MA153	DIODE	4	
D565,66		MA151K	DIODE	2	
D567,68		MA165	DIODE	2	
D569		MA151K	DIODE	1	
D570-71		MA165	DIODE	2	
D901		MA151WK	DIODE	1	
D902-04		MA151K	DIODE	3	
D905		MA153	DIODE	1	
FL1		VLQ0142	COIL	1	
FL101		EIR7QH007Q	FILTER	1	
FL102		VLF0829	FILTER	1	
FL103		ELM7Q306A	COIL	1	
FL201		VLQ0190	COIL 4.7MH	1	
FL202		VLQ0402	COIL	1	
FL301		EIR7QH007Q	FILTER	1	
FL302		VLF0829	FILTER	1	
FL303		ELM7Q306A	COIL	1	
FL401		VLQ0190	COIL 4.7MH	1	
FL402		VLQ0402	COIL	1	

Refer to the P.C.BOARDS LIST, page 6-1-1, before using this page.

Ref.No.		Part No.	Part Name & Description	Pcs	Remarks
FL701		VLF0427	FILTER	1	
FL801		VLF0427	FILTER	1	
FL901		ELB41L053	FILTER	1	
FL902		ELB4M043	FILTER	1	
IC1-C3		MC14053BF	IC	3	(R)
IC4		NJM4558M	IC	1	
IC5,C6		RC082BM	IC	2	
IC101		AN6558S	IC	1	
IC102		RC4556MB	IC	1	
IC103		MC14053BF	IC	1	(R)
IC104		NJM4558M	IC	1	
IC105		TEA0666T	IC	1	
IC106		AN78N09	IC	1	
IC107		AN79N09	IC	1	
IC108		NJM4558M	IC	1	
IC201-03		NJM4558M	IC	3	
IC301		AN6558S	IC	1	
IC302		RC4556MB	IC	1	
IC303		MC14053BF	IC	1	(R)
IC304		NJM4558M	IC	1	
IC305		TEA0666T	IC	1	
IC306		AN78N09	IC	1	
IC307		AN79N09	IC	1	
IC308		NJM4558M	IC	1	
IC401-03		NJM4558M	IC	3	
IC552		MB620412PF	IC	1	
IC553		AN78L20	IC	1	
IC554-56		LM2904M	IC	3	
IC701		NJM4558M	IC	1	
IC703		NJM4558M	IC	1	
IC801		NJM4558M	IC	1	
IC802		MC14053BF	IC	1	(R)
IC803,04		NJM4558M	IC	2	
IC805		BA7700K1	IC	1	
IC901		AN78L12	IC	1	
IC902		AN78L05	IC	1	
IC903		AN79L09	IC	1	
IC904		AN78L09	IC	1	
L1		EIR7QG010B	IF TRANSFORMER	1	
L101,02		VLQEL05F101K	COIL 100UH	2	
L301,02		VLQEL05F101K	COIL 100UH	2	
L551		VLQEL05S2R2K	COIL 2.2UH	1	
L552		VLQEL05S471K	COIL 470UH	1	
L553,54		VLQEL05S470J	COIL 47UH	2	
L901		VLQEL05S470J	COIL 47UH	1	
L902		VLQEL05S221J	COIL 220UH	1	
L903		VLQEL05F101K	COIL 100UH	1	
L904		VLQEL05S820J	COIL 82UH	1	
L905		VLQEL05S331J	COIL 330UH	1	
L906,07		VLQEL05F101K	COIL 100UH	2	
L909		VLQEL05S271J	COIL 270UH	1	
L910-13		VLQEL05F101K	COIL 100UH	4	
P101		VJP1232R	CONNECTOR(MALE) 5P	1	
P301		VJP1232G	CONNECTOR(MALE)	1	
P551		VJP1239T	CONNECTOR(MALE) 12P	1	
P553		VJP1230T	CONNECTOR(MALE) 3P	1	
Q1		2SD602	TRANSISTOR	1	(Q,R)
Q2		UN2113	TRANSISTOR-RESISTOR	1	
Q3		2SA1018-R	TRANSISTOR	1	(R)
Q4,Q5		2SC3478A	TRANSISTOR	2	
Q6		2SD602	TRANSISTOR	1	(Q,R)
Q7		2SD1328	TRANSISTOR CHIP	1	(Q,R)
Q11		UN2211	TRANSISTOR-RESISTOR	1	

Ref.No.		Part No.	Part Name & Description	Pcs	Remarks
Q12		2SB710	TRANSISTOR	1	
Q14		UN2210	TRANSISTOR-RESISTOR	1	
Q101		UN2113	TRANSISTOR-RESISTOR	1	
Q102		UN2213	TRANSISTOR-RESISTOR	1	
Q103-05		2SD601	TRANSISTOR CHIP	3	(Q,R)
Q106		UN2213	TRANSISTOR-RESISTOR	1	
Q107		2SD1328	TRANSISTOR CHIP	1	(Q,R)
Q108		UN2113	TRANSISTOR-RESISTOR	1	
Q109,10		2SD601	TRANSISTOR CHIP	2	(Q,R)
Q111,12		2SD1011	TRANSISTOR	2	
Q113		2SA1018-R	TRANSISTOR	1	(R)
Q114		2SK146	TRANSISTOR	1	(B,L)
Q115		2SD601	TRANSISTOR CHIP	1	(Q,R)
Q116		2SB709	TRANSISTOR CHIP	1	(Q,R)
Q117		2SD601	TRANSISTOR CHIP	1	(Q,R)
Q118-20		UN2213	TRANSISTOR-RESISTOR	3	
Q122		UN2213	TRANSISTOR-RESISTOR	1	
Q201		2SD601	TRANSISTOR CHIP	1	(Q,R)
Q202		2SB709	TRANSISTOR CHIP	1	(Q,R)
Q203		2SD601	TRANSISTOR CHIP	1	(Q,R)
Q204		2SB709	TRANSISTOR CHIP	1	(Q,R)
Q205		2SD1328	TRANSISTOR CHIP	1	(Q,R)
Q301		UN2113	TRANSISTOR-RESISTOR	1	
Q302		UN2213	TRANSISTOR-RESISTOR	1	
Q303-05		2SD601	TRANSISTOR CHIP	3	(Q,R)
Q306		UN2213	TRANSISTOR-RESISTOR	1	
Q307		2SD1328	TRANSISTOR CHIP	1	(Q,R)
Q308		UN2113	TRANSISTOR-RESISTOR	1	
Q309,10		2SD601	TRANSISTOR CHIP	2	(Q,R)
Q311,12		2SD1011	TRANSISTOR	2	
Q313		2SA1018-R	TRANSISTOR	1	(R)
Q314		2SK146	TRANSISTOR	1	(B,L)
Q315		2SD601	TRANSISTOR CHIP	1	(Q,R)
Q316		2SB709	TRANSISTOR CHIP	1	(Q,R)
Q317		2SD601	TRANSISTOR CHIP	1	(Q,R)
Q318-20		UN2213	TRANSISTOR-RESISTOR	3	
Q322		UN2213	TRANSISTOR-RESISTOR	1	
Q401		2SD601	TRANSISTOR CHIP	1	(Q,R)
Q402		2SB709	TRANSISTOR CHIP	1	(Q,R)
Q403		2SD601	TRANSISTOR CHIP	1	(Q,R)
Q404		2SB709	TRANSISTOR CHIP	1	(Q,R)
Q405		2SD1328	TRANSISTOR CHIP	1	(Q,R)
Q501		2SB709	TRANSISTOR CHIP	1	(Q,R)
Q502		UN2113	TRANSISTOR-RESISTOR	1	
Q551-62		UN2213	TRANSISTOR-RESISTOR	12	
Q563,64		UN2113	TRANSISTOR-RESISTOR	2	
Q565-68		2SC2295	TRANSISTOR CHIP	4	(B,C)
Q571		2SC2497	TRANSISTOR	1	
Q572		2SB710	TRANSISTOR	1	
Q573,74		2SD1994A	TRANSISTOR	2	(Q,R)
Q575		2SC2497	TRANSISTOR	1	
Q576		2SB710	TRANSISTOR	1	
Q577,78		2SD1994A	TRANSISTOR	2	(Q,R)
Q579		2SD1992A	TRANSISTOR	1	
Q580		2SB710	TRANSISTOR	1	
Q581,82		2SD1994A	TRANSISTOR	2	(Q,R)
Q583		2SB710	TRANSISTOR	1	
Q584,85		2SD1328	TRANSISTOR CHIP	2	(Q,R)
Q586		2SD1992A	TRANSISTOR	1	
Q587		2SB710	TRANSISTOR	1	
Q588,89		2SD1994A	TRANSISTOR	2	(Q,R)
Q590		2SB710	TRANSISTOR	1	
Q591,92		2SD1328	TRANSISTOR CHIP	2	(Q,R)
Q593		2SC2497	TRANSISTOR	1	
Q594		2SB710	TRANSISTOR	1	
Q595,96		2SD1994A	TRANSISTOR	2	(Q,R)
Q597		2SD1992A	TRANSISTOR	1	
Q598		2SB710	TRANSISTOR	1	
Q599,00		2SD1994A	TRANSISTOR	2	(Q,R)
Q601		2SB710	TRANSISTOR	1	
Q602,03		2SD1328	TRANSISTOR CHIP	2	(Q,R)
Q604		UN2213	TRANSISTOR-RESISTOR	1	
Q605		2SB710	TRANSISTOR	1	
Q606		2SD1992A	TRANSISTOR	1	
Q607		2SB710	TRANSISTOR	1	

Refer to the P.C.BOARDS LIST, page 6-1-1, before using this page.

Ref.No.		Part No.	Part Name & Description	Pcs	Remarks
Q608,09		2SD1994A	TRANSISTOR	2	(Q,R)
Q610		2SB710	TRANSISTOR	1	
Q611,12		2SD1328	TRANSISTOR CHIP	2	(Q,R)
Q613		UN2213	TRANSISTOR-RESISTOR	1	
Q614		2SB710	TRANSISTOR	1	
Q615		2SD1992A	TRANSISTOR	1	
Q616		2SB710	TRANSISTOR	1	
Q617,18		2SD1994A	TRANSISTOR	2	(Q,R)
Q619-21		UN2213	TRANSISTOR-RESISTOR	3	
Q701		2SD1328	TRANSISTOR CHIP	1	(Q,R)
Q702		2SD601	TRANSISTOR CHIP	1	(Q,R)
Q801		2SD1328	TRANSISTOR CHIP	1	(Q,R)
Q802		2SD601	TRANSISTOR CHIP	1	(Q,R)
Q901		UN2113	TRANSISTOR-RESISTOR	1	
Q902-04		UN2213	TRANSISTOR-RESISTOR	3	
Q909		2SC2404	TRANSISTOR CHIP	1	(B,C)
Q910,11		2SD601	TRANSISTOR CHIP	2	(Q,R)
Q912		2SC2404	TRANSISTOR CHIP	1	(B,C)
Q913,14		2SD601	TRANSISTOR CHIP	2	(Q,R)
Q915		2SC2404	TRANSISTOR CHIP	1	(B,C)
Q916,17		2SD601	TRANSISTOR CHIP	2	(Q,R)
Q920		UN2113	TRANSISTOR-RESISTOR	1	
			RESISTORS		
R1		ERJ6GEYJ102	M.RESISTOR CH 1/10W 1K	1	
R2		ERJ6GEYJ223	M.RESISTOR CH 1/10W 22K	1	
R3,R4		ERJ6GEYJ473	M.RESISTOR CH 1/10W 47K	2	
R5		ERJ6GEYJ472	M.RESISTOR CH 1/10W 4.7K	1	
R6,R7		ERJ6GEYJ103	M.RESISTOR CH 1/10W 10K	2	
R8		ERJ6GEYJ104	M.RESISTOR CH 1/10W 100K	1	
R9		ERJ6GEYJ472	M.RESISTOR CH 1/10W 4.7K	1	
R10		ERJ6GEYJ471	M.RESISTOR CH 1/10W 470	1	
R11		ERJ6GEYJ103	M.RESISTOR CH 1/10W 10K	1	
R12		ERJ6GEYJ100	M.RESISTOR CH 1/10W 10	1	
R13		ERJ6GEYJ473	M.RESISTOR CH 1/10W 47K	1	
R14		ERJ6GEYJ102	M.RESISTOR CH 1/10W 1K	1	
R15		ERJ6GEY0R00	M.RESISTOR CH 1/10W 0	1	
R16		ERJ6GEYJ224	M.RESISTOR CH 1/10W 220K	1	
R17		ERJ6GEYJ562	M.RESISTOR CH 1/10W 5.6K	1	
R18		ERJ6GEYJ473	M.RESISTOR CH 1/10W 47K	1	
R19		ERJ6GEYJ331	M.RESISTOR CH 1/10W 330	1	
R20		ERJ6GEYJ473	M.RESISTOR CH 1/10W 47K	1	
R21		ERJ6GEYJ123	M.RESISTOR CH 1/10W 12K	1	
R22		ERJ6GEYJ104	M.RESISTOR CH 1/10W 100K	1	
R23		ERJ6GEYJ102	M.RESISTOR CH 1/10W 1K	1	
R24		ERJ6GEYJ470	M.RESISTOR CH 1/10W 47	1	
R25		ERJ6GEYJ332	M.RESISTOR CH 1/10W 3.3K	1	
R26		ERJ6GEYJ473	M.RESISTOR CH 1/10W 47K	1	
R27		ERJ6GEYJ472	M.RESISTOR CH 1/10W 4.7K	1	
R29		ERJ6GEYJ470	M.RESISTOR CH 1/10W 47	1	
R30		ERJ6GEYJ102	M.RESISTOR CH 1/10W 1K	1	
R39		ERJ6GEYJ104	M.RESISTOR CH 1/10W 100K	1	
R42,43		ERJ6GEYJ223	M.RESISTOR CH 1/10W 22K	2	
R44		ERJ6GEYJ104	M.RESISTOR CH 1/10W 100K	1	
R49		ERJ6GEYJ103	M.RESISTOR CH 1/10W 10K	1	
R50		ERDS2TJ223	C.RESISTOR 1/4W 22K	1	
R101,02		ERJ6GEYJ103	M.RESISTOR CH 1/10W 10K	2	
R104,05		ERJ6GEYJ223	M.RESISTOR CH 1/10W 22K	2	
R106		ERJ6GEYJ103	M.RESISTOR CH 1/10W 10K	1	
R107		ERJ6GEYJ153	M.RESISTOR CH 1/10W 15K	1	
R108		ERJ6GEYJ681	M.RESISTOR CH 1/10W 680	1	
R109		ERJ6GEYJ470	M.RESISTOR CH 1/10W 47	1	
R110		ERJ6GEYJ102	M.RESISTOR CH 1/10W 1K	1	
R111		ERJ6GEYJ393	M.RESISTOR CH 1/10W 39K	1	
R112		ERJ6GEYJ104	M.RESISTOR CH 1/10W 100K	1	
R113		ERJ6GEYJ102	M.RESISTOR CH 1/10W 1K	1	
R114		ERJ6GEYJ332	M.RESISTOR CH 1/10W 3.3K	1	
R115		ERJ6GEYJ103	M.RESISTOR CH 1/10W 10K	1	
R116		ERJ6GEYJ332	M.RESISTOR CH 1/10W 3.3K	1	
R117		ERJ6GEYJ102	M.RESISTOR CH 1/10W 1K	1	
R118-20		ERJ6GEYJ104	M.RESISTOR CH 1/10W 100K	3	
R121		ERJ6GEYJ102	M.RESISTOR CH 1/10W 1K	1	
R122		ERJ6GEYJ103	M.RESISTOR CH 1/10W 10K	1	

Ref.No.		Part No.	Part Name & Description	Pcs	Remarks
R123		ERJ6GEYJ102	M.RESISTOR CH 1/10W 1K	1	
R124		ERJ6GEYG112	M.RESISTOR CH 1/10W 1.1K	1	
R125		ERJ6GEY0R00	M.RESISTOR CH 1/10W 0	1	
R126		ERJ6GEYJ104	M.RESISTOR CH 1/10W 100K	1	
R127		ERJ6GEYJ102	M.RESISTOR CH 1/10W 1K	1	
R128		ERJ6GEYJ123	M.RESISTOR CH 1/10W 12K	1	
R129		ERJ6GEYJ104	M.RESISTOR CH 1/10W 100K	1	
R130		ERJ6GEYJ103	M.RESISTOR CH 1/10W 10K	1	
R131		ERJ6GEYJ100	M.RESISTOR CH 1/10W 10	1	
R133,34		ERJ6GEYJ223	M.RESISTOR CH 1/10W 22K	2	
R135		ERJ6GEYJ472	M.RESISTOR CH 1/10W 4.7K	1	
R136		ERJ6GEYJ561	M.RESISTOR CH 1/10W 560	1	
R137		ERJ6GEYJ332	M.RESISTOR CH 1/10W 3.3K	1	
R138,39		VRE0034E272	M.RESISTOR CH 1/10W 2.7K	2	
R140		ERJ6GEYJ103	M.RESISTOR CH 1/10W 10K	1	
R141		VRE0034E473	M.RESISTOR CH 1/10W 47K	1	
R142		VRE0034E272	M.RESISTOR CH 1/10W 2.7K	1	
R143		VRE0034E470	M.RESISTOR CH 1/10W 47	1	
R144		VRE0034E104	M.RESISTOR CH 1/10W 100K	1	
R145		ERJ6GEYJ102	M.RESISTOR CH 1/10W 1K	1	
R146		ERJ6GEYJ333	M.RESISTOR CH 1/10W 33K	1	
R147		ERJ6GEYJ103	M.RESISTOR CH 1/10W 10K	1	
R148,49		ERJ6GEYJ102	M.RESISTOR CH 1/10W 1K	2	
R150		ERJ6GEYJ223	M.RESISTOR CH 1/10W 22K	1	
R151		ERJ6GEYJ102	M.RESISTOR CH 1/10W 1K	1	
R152		ERJ6GEYJ103	M.RESISTOR CH 1/10W 10K	1	
R153		ERJ6GEYJ221	M.RESISTOR CH 1/10W 220	1	
R154		ERJ6GEYJ101	M.RESISTOR CH 1/10W 100	1	
R155		ERJ6GEYJ272	M.RESISTOR CH 1/10W 2.7K	1	
R156		ERJ6GEYJ332	M.RESISTOR CH 1/10W 3.3K	1	
R157		VRE0034E102	M.RESISTOR CH 1/10W 1K	1	
R158		VRE0034E332	M.RESISTOR CH 1/10W 3.3K	1	
R159		ERJ6GEYJ221	M.RESISTOR CH 1/10W 220	1	
R160		VRE0034E823	M.RESISTOR CH 1/10W 82K	1	
R161		VRE0034E333	M.RESISTOR CH 1/10W 33K	1	
R162		VRE0034E823	M.RESISTOR CH 1/10W 82K	1	
R163		ERJ6GEYJ104	M.RESISTOR CH 1/10W 100K	1	
R164		VRE0034E683	M.RESISTOR CH 1/10W 68K	1	
R165		VRE0034E222	M.RESISTOR CH 1/10W 2.2K	1	
R166		VRE0034E512	M.RESISTOR CH 1/10W 5.1K	1	
R167		VRE0034E822	M.RESISTOR CH 1/10W 8.2K	1	
R168		VRE0034E203	M.RESISTOR CH 1/10W 20K	1	
R169		VRE0034E821	M.RESISTOR CH 1/10W 820	1	
R201		ERJ6GEYJ104	M.RESISTOR CH 1/10W 100K	1	
R202		ERJ6GEYJ103	M.RESISTOR CH 1/10W 10K	1	
R204		ERJ6GEYJ103	M.RESISTOR CH 1/10W 10K	1	
R205		ERJ6GEYJ332	M.RESISTOR CH 1/10W 3.3K	1	
R206		ERJ6GEYJ183	M.RESISTOR CH 1/10W 18K	1	
R207		ERJ6GEYJ132	M.RESISTOR CH 1/10W 1.3K	1	
R208		ERJ6GEYJ183	M.RESISTOR CH 1/10W 18K	1	
R209		ERJ6GEYJ223	M.RESISTOR CH 1/10W 22K	1	
R210-12		ERJ6GEYJ104	M.RESISTOR CH 1/10W 100K	3	
R213		ERJ6GEYJ223	M.RESISTOR CH 1/10W 22K	1	
R214		ERJ6GEYJ152	M.RESISTOR CH 1/10W 1.5K	1	
R215		ERJ6GEYJ332	M.RESISTOR CH 1/10W 3.3K	1	
R216		ERJ6GEYJ102	M.RESISTOR CH 1/10W 1K	1	
R217		ERJ6GEYJ104	M.RESISTOR CH 1/10W 100K	1	
R218		ERJ6GEYJ103	M.RESISTOR CH 1/10W 10K	1	
R219		ERJ6GEYJ472	M.RESISTOR CH 1/10W 4.7K	1	
R220		ERJ6GEYJ682	M.RESISTOR CH 1/10W 6.8K	1	
R221		ERJ6GEYJ471	M.RESISTOR CH 1/10W 470	1	
R222		ERJ6GEYJ102	M.RESISTOR CH 1/10W 1K	1	
R223		ERJ6GEYJ392	M.RESISTOR CH 1/10W 3.9K	1	
R224,25		ERJ6GEYJ103	M.RESISTOR CH 1/10W 10K	2	
R226		ERJ6GEYJ102	M.RESISTOR CH 1/10W 1K	1	
R227		ERJ6GEYJ183	M.RESISTOR CH 1/10W 18K	1	
R228		ERJ6GEYJ272	M.RESISTOR CH 1/10W 2.7K	1	
R229		ERJ6GEYJ103	M.RESISTOR CH 1/10W 10K	1	
R230		ERJ6GEYJ102	M.RESISTOR CH 1/10W 1K	1	
R231		ERJ6GEYJ103	M.RESISTOR CH 1/10W 10K	1	
R232		ERJ6GEYJ272	M.RESISTOR CH 1/10W 2.7K	1	
R233		ERJ6GEYJ561	M.RESISTOR CH 1/10W 560	1	
R235		ERJ6GEYJ103	M.RESISTOR CH 1/10W 10K	1	
R236		ERJ6GEYJ331	M.RESISTOR CH 1/10W 330	1	
R301,02		ERJ6GEYJ103	M.RESISTOR CH 1/10W 10K	2	

Refer to the P.C.BOARDS LIST, page 6-1-1, before using this page.

Ref.No.		Part No.	Part Name & Description	Pcs	Remarks
R304		ERJ6GEYJ223	M.RESISTOR CH 1/10W 22K	1	
R306		ERJ6GEYJ103	M.RESISTOR CH 1/10W 10K	1	
R307		ERJ6GEYJ153	M.RESISTOR CH 1/10W 15K	1	
R308		ERJ6GEYJ681	M.RESISTOR CH 1/10W 680	1	
R309		ERJ6GEYJ470	M.RESISTOR CH 1/10W 47	1	
R310		ERJ6GEYJ102	M.RESISTOR CH 1/10W 1K	1	
R311		ERJ6GEYJ393	M.RESISTOR CH 1/10W 39K	1	
R312		ERJ6GEYJ104	M.RESISTOR CH 1/10W 100K	1	
R313		ERJ6GEYJ102	M.RESISTOR CH 1/10W 1K	1	
R314		ERJ6GEYJ332	M.RESISTOR CH 1/10W 3.3K	1	
R315		ERJ6GEYJ103	M.RESISTOR CH 1/10W 10K	1	
R316		ERJ6GEYJ332	M.RESISTOR CH 1/10W 3.3K	1	
R317		ERJ6GEYJ102	M.RESISTOR CH 1/10W 1K	1	
R318-20		ERJ6GEYJ104	M.RESISTOR CH 1/10W 100K	3	
R321		ERJ6GEYJ102	M.RESISTOR CH 1/10W 1K	1	
R322		ERJ6GEYJ103	M.RESISTOR CH 1/10W 10K	1	
R323		ERJ6GEYJ102	M.RESISTOR CH 1/10W 1K	1	
R324		ERJ6GEYG112	M.RESISTOR CH 1/10W 1.1K	1	
R325		ERJ6GEY0R00	M.RESISTOR CH 1/10W 0	1	
R326		ERJ6GEYJ104	M.RESISTOR CH 1/10W 100K	1	
R327		ERJ6GEYJ102	M.RESISTOR CH 1/10W 1K	1	
R328		ERJ6GEYJ123	M.RESISTOR CH 1/10W 12K	1	
R329		ERJ6GEYJ104	M.RESISTOR CH 1/10W 100K	1	
R330		ERJ6GEYJ103	M.RESISTOR CH 1/10W 10K	1	
R331		ERJ6GEYJ100	M.RESISTOR CH 1/10W 10	1	
R333,34		ERJ6GEYJ223	M.RESISTOR CH 1/10W 22K	2	
R335		ERJ6GEYJ472	M.RESISTOR CH 1/10W 4.7K	1	
R336		ERJ6GEYJ561	M.RESISTOR CH 1/10W 560	1	
R337		ERJ6GEYJ332	M.RESISTOR CH 1/10W 3.3K	1	
R338,39		VRE0034E272	M.RESISTOR CH 1/10W 2.7K	2	
R340		ERJ6GEYJ103	M.RESISTOR CH 1/10W 10K	1	
R341		VRE0034E473	M.RESISTOR CH 1/10W 47K	1	
R342		VRE0034E272	M.RESISTOR CH 1/10W 2.7K	1	
R343		VRE0034E470	M.RESISTOR CH 1/10W 47	1	
R344		VRE0034E104	M.RESISTOR CH 1/10W 100K	1	
R345		ERJ6GEYJ102	M.RESISTOR CH 1/10W 1K	1	
R346		ERJ6GEYJ333	M.RESISTOR CH 1/10W 33K	1	
R347		ERJ6GEYJ103	M.RESISTOR CH 1/10W 10K	1	
R348,49		ERJ6GEYJ102	M.RESISTOR CH 1/10W 1K	2	
R350		ERJ6GEYJ223	M.RESISTOR CH 1/10W 22K	1	
R351		ERJ6GEYJ102	M.RESISTOR CH 1/10W 1K	1	
R352		ERJ6GEYJ103	M.RESISTOR CH 1/10W 10K	1	
R353		ERJ6GEYJ221	M.RESISTOR CH 1/10W 220	1	
R354		ERJ6GEYJ101	M.RESISTOR CH 1/10W 100	1	
R355		ERJ6GEYJ272	M.RESISTOR CH 1/10W 2.7K	1	
R356		ERJ6GEYJ332	M.RESISTOR CH 1/10W 3.3K	1	
R357		VRE0034E102	M.RESISTOR CH 1/10W 1K	1	
R358		VRE0034E332	M.RESISTOR CH 1/10W 3.3K	1	
R359		ERJ6GEYJ221	M.RESISTOR CH 1/10W 220	1	
R360		VRE0034E823	M.RESISTOR CH 1/10W 82K	1	
R361		VRE0034E333	M.RESISTOR CH 1/10W 33K	1	
R362		VRE0034E823	M.RESISTOR CH 1/10W 82K	1	
R363		ERJ6GEYJ104	M.RESISTOR CH 1/10W 100K	1	
R364		VRE0034E683	M.RESISTOR CH 1/10W 68K	1	
R365		VRE0034E222	M.RESISTOR CH 1/10W 2.2K	1	
R366		VRE0034E512	M.RESISTOR CH 1/10W 5.1K	1	
R367		VRE0034E822	M.RESISTOR CH 1/10W 8.2K	1	
R368		VRE0034E203	M.RESISTOR CH 1/10W 20K	1	
R369		VRE0034E821	M.RESISTOR CH 1/10W 820	1	
R401		ERJ6GEYJ104	M.RESISTOR CH 1/10W 100K	1	
R402-04		ERJ6GEYJ103	M.RESISTOR CH 1/10W 10K	3	
R405		ERJ6GEYJ332	M.RESISTOR CH 1/10W 3.3K	1	
R406		ERJ6GEYJ183	M.RESISTOR CH 1/10W 18K	1	
R407		ERJ6GEYJ132	M.RESISTOR CH 1/10W 1.3K	1	
R408		ERJ6GEYJ183	M.RESISTOR CH 1/10W 18K	1	
R409		ERJ6GEYJ223	M.RESISTOR CH 1/10W 22K	1	
R410-12		ERJ6GEYJ104	M.RESISTOR CH 1/10W 100K	3	
R413		ERJ6GEYJ223	M.RESISTOR CH 1/10W 22K	1	
R414		ERJ6GEYJ152	M.RESISTOR CH 1/10W 1.5K	1	
R415		ERJ6GEYJ332	M.RESISTOR CH 1/10W 3.3K	1	
R416		ERJ6GEYJ102	M.RESISTOR CH 1/10W 1K	1	
R417		ERJ6GEYJ104	M.RESISTOR CH 1/10W 100K	1	
R418		ERJ6GEYJ103	M.RESISTOR CH 1/10W 10K	1	
R419		ERJ6GEYJ472	M.RESISTOR CH 1/10W 4.7K	1	
R420		ERJ6GEYJ682	M.RESISTOR CH 1/10W 6.8K	1	

Ref.No.		Part No.	Part Name & Description	Pcs	Remarks
R421		ERJ6GEYJ471	M.RESISTOR CH 1/10W 470	1	
R422		ERJ6GEYJ102	M.RESISTOR CH 1/10W 1K	1	
R423		ERJ6GEYJ392	M.RESISTOR CH 1/10W 3.9K	1	
R424,25		ERJ6GEYJ103	M.RESISTOR CH 1/10W 10K	2	
R426		ERJ6GEYJ102	M.RESISTOR CH 1/10W 1K	1	
R427		ERJ6GEYJ183	M.RESISTOR CH 1/10W 18K	1	
R428		ERJ6GEYJ272	M.RESISTOR CH 1/10W 2.7K	1	
R429		ERJ6GEYJ103	M.RESISTOR CH 1/10W 10K	1	
R430		ERJ6GEYJ102	M.RESISTOR CH 1/10W 1K	1	
R431		ERJ6GEYJ103	M.RESISTOR CH 1/10W 10K	1	
R432		ERJ6GEYJ272	M.RESISTOR CH 1/10W 2.7K	1	
R433		ERJ6GEYJ561	M.RESISTOR CH 1/10W 560	1	
R435		ERJ6GEYJ103	M.RESISTOR CH 1/10W 10K	1	
R436		ERJ6GEYJ331	M.RESISTOR CH 1/10W 330	1	
R501		ERJ6GEYJ103	M.RESISTOR CH 1/10W 10K	1	
R502,03		ERJ6GEYJ223	M.RESISTOR CH 1/10W 22K	2	
R508		ERJ6GEYJ103	M.RESISTOR CH 1/10W 10K	1	
R509		ERJ6GEYJ223	M.RESISTOR CH 1/10W 22K	1	
R551		ERJ6GEYJ223	M.RESISTOR CH 1/10W 22K	1	
R552		ERJ6GEYJ103	M.RESISTOR CH 1/10W 10K	1	
R553		ERJ6GEYJ102	M.RESISTOR CH 1/10W 1K	1	
R554		ERJ6GEYJ330	M.RESISTOR CH 1/10W 33	1	
R555		ERJ6GEYJ103	M.RESISTOR CH 1/10W 10K	1	
R556		ERJ6GEYJ473	M.RESISTOR CH 1/10W 47K	1	
R557		ERJ6GEYJ330	M.RESISTOR CH 1/10W 33	1	
R558		ERJ6GEYJ103	M.RESISTOR CH 1/10W 10K	1	
R559		ERJ6GEYJ392	M.RESISTOR CH 1/10W 3.9K	1	
R560		ERJ6GEYJ101	M.RESISTOR CH 1/10W 100	1	
R561		ERJ6GEYJ103	M.RESISTOR CH 1/10W 10K	1	
R563		ERJ6GEYJ101	M.RESISTOR CH 1/10W 100	1	
R564		ERJ6GEYJ105	M.RESISTOR CH 1/10W 1M	1	
R565		ERJ6GEYJ104	M.RESISTOR CH 1/10W 100K	1	
R569		ERJ6GEY0R00	M.RESISTOR CH 1/10W 0	1	
R570		ERJ6GEYJ472	M.RESISTOR CH 1/10W 4.7K	1	
R571		ERJ6GEYJ333	M.RESISTOR CH 1/10W 33K	1	
R572,73		ERJ6GEYJ220	M.RESISTOR CH 1/10W 22	2	
R574		ERDS2TJ8R2	C.RESISTOR 1/4W 8.2	1	
R575		ERJ6GEYJ472	M.RESISTOR CH 1/10W 4.7K	1	
R576		ERJ6GEYJ333	M.RESISTOR CH 1/10W 33K	1	
R577,78		ERJ6GEYJ220	M.RESISTOR CH 1/10W 22	2	
R579		ERDS2TJ8R2	C.RESISTOR 1/4W 8.2	1	
R580		ERJ6GEYJ103	M.RESISTOR CH 1/10W 10K	1	
R581		ERJ6GEYJ683	M.RESISTOR CH 1/10W 68K	1	
R582		ERJ6GEYJ103	M.RESISTOR CH 1/10W 10K	1	
R583		ERJ6GEYJ824	M.RESISTOR CH 1/10W 820K	1	
R584,85		ERJ6GEYJ220	M.RESISTOR CH 1/10W 22	2	
R586,87		ERJ6GEYJ273	M.RESISTOR CH 1/10W 27K	2	
R588		ERDS2TJ100	C.RESISTOR 1/4W 10	1	
R589		ERJ6GEYJ103	M.RESISTOR CH 1/10W 10K	1	
R590,91		ERJ6GEYJ222	M.RESISTOR CH 1/10W 2.2K	2	
R592		ERJ6GEYK1R0	M.RESISTOR CH 1/10W 1	1	
R593		ERJ6GEYJ103	M.RESISTOR CH 1/10W 10K	1	
R594		ERJ6GEYJ683	M.RESISTOR CH 1/10W 68K	1	
R595		ERJ6GEYJ103	M.RESISTOR CH 1/10W 10K	1	
R596		ERJ6GEYJ824	M.RESISTOR CH 1/10W 820K	1	
R597,98		ERJ6GEYJ220	M.RESISTOR CH 1/10W 22	2	
R599,00		ERJ6GEYJ273	M.RESISTOR CH 1/10W 27K	2	
R601		ERDS2TJ100	C.RESISTOR 1/4W 10	1	
R602		ERJ6GEYJ103	M.RESISTOR CH 1/10W 10K	1	
R603,04		ERJ6GEYJ222	M.RESISTOR CH 1/10W 2.2K	2	
R605		ERJ6GEYK1R0	M.RESISTOR CH 1/10W 1	1	
R606		ERJ6GEYJ472	M.RESISTOR CH 1/10W 4.7K	1	
R607		ERJ6GEYJ333	M.RESISTOR CH 1/10W 33K	1	
R608,09		ERJ6GEYJ220	M.RESISTOR CH 1/10W 22	2	
R610,11		ERJ6GEYJ224	M.RESISTOR CH 1/10W 220K	2	
R612		ERDS2TJ470	C.RESISTOR 1/4W 47	1	
R613		ERJ6GEYJ103	M.RESISTOR CH 1/10W 10K	1	
R614		ERJ6GEYJ683	M.RESISTOR CH 1/10W 68K	1	
R615		ERJ6GEYJ103	M.RESISTOR CH 1/10W 10K	1	
R616		ERJ6GEYJ824	M.RESISTOR CH 1/10W 820K	1	
R617,18		ERJ6GEYJ220	M.RESISTOR CH 1/10W 22	2	
R619,20		ERJ6GEYJ104	M.RESISTOR CH 1/10W 100K	2	
R621		ERDS2TJ6R8	C.RESISTOR 1/4W 6.8	1	
R622		ERJ6GEYJ103	M.RESISTOR CH 1/10W 10K	1	
R623,24		ERJ6GEYJ222	M.RESISTOR CH 1/10W 2.2K	2	

Refer to the P.C.BOARDS LIST, page 6-1-1, before using this page.

Ref.No.	Part No.	Part Name & Description	Pcs	Remarks
R625	ERJ6GEYK1R0	M.RESISTOR CH 1/10W 1	1	
R626	ERJ6GEYJ184	M.RESISTOR CH 1/10W 180K	1	
R627,28	ERJ6GEYJ103	M.RESISTOR CH 1/10W 10K	2	
R629,30	ERJ6GEYJ220	M.RESISTOR CH 1/10W 22	2	
R631,32	ERJ6GEYJ104	M.RESISTOR CH 1/10W 100K	2	
R633	ERDS2TJ6R8	C.RESISTOR 1/4W 6.8	1	
R634	ERJ6GEYJ103	M.RESISTOR CH 1/10W 10K	1	
R635,36	ERJ6GEYJ222	M.RESISTOR CH 1/10W 2.2K	2	
R637	ERJ6GEYK1R0	M.RESISTOR CH 1/10W 1	1	
R638	ERJ6GEYJ184	M.RESISTOR CH 1/10W 180K	1	
R639,40	ERJ6GEYJ103	M.RESISTOR CH 1/10W 10K	2	
R641,42	ERJ6GEYJ220	M.RESISTOR CH 1/10W 22	2	
R643,44	ERJ6GEYJ104	M.RESISTOR CH 1/10W 100K	2	
R645	ERDS2TJ6R8	C.RESISTOR 1/4W 6.8	1	
R646	ERJ6GEYK1R0	M.RESISTOR CH 1/10W 1	1	
R647-50	ERJ6GEYJ823	M.RESISTOR CH 1/10W 82K	4	
R651,52	ERJ6GEYJ103	M.RESISTOR CH 1/10W 10K	2	
R655,56	ERJ6GEY0R00	M.RESISTOR CH 1/10W 0	2	
R657	ERJ6GEYJ102	M.RESISTOR CH 1/10W 1K	1	
R658	ERJ6GEY0R00	M.RESISTOR CH 1/10W 0	1	
R659	ERJ6GEYJ472	M.RESISTOR CH 1/10W 4.7K	1	
R660,61	ERJ6GEYJ223	M.RESISTOR CH 1/10W 22K	2	
R662,63	ERJ6GEY0R00	M.RESISTOR CH 1/10W 0	2	
R664,65	ERJ6GEYJ392	M.RESISTOR CH 1/10W 3.9K	2	
R666	ERJ6GEYJ332	M.RESISTOR CH 1/10W 3.3K	1	
R667	ERJ6GEYJ473	M.RESISTOR CH 1/10W 47K	1	
R670-73	ERDS2TJ102	C.RESISTOR 1/4W 1K	4	
R701	ERJ6GEYJ104	M.RESISTOR CH 1/10W 100K	1	
R702,03	ERJ6GEYJ332	M.RESISTOR CH 1/10W 3.3K	2	
R704	ERJ6GEYJ102	M.RESISTOR CH 1/10W 1K	1	
R705	ERJ6GEYJ272	M.RESISTOR CH 1/10W 2.7K	1	
R706	ERJ6GEYJ102	M.RESISTOR CH 1/10W 1K	1	
R707,08	ERJ6GEYJ104	M.RESISTOR CH 1/10W 100K	2	
R709	ERJ6GEYJ472	M.RESISTOR CH 1/10W 4.7K	1	
R710	ERJ6GEYJ682	M.RESISTOR CH 1/10W 6.8K	1	
R718	ERJ6GEYJ272	M.RESISTOR CH 1/10W 2.7K	1	
R719,20	ERJ6GEYJ332	M.RESISTOR CH 1/10W 3.3K	2	
R728,29	ERJ6GEYJ821	M.RESISTOR CH 1/10W 820	2	
R730	ERJ6GEYJ681	M.RESISTOR CH 1/10W 680	1	
R731	ERJ6GEY0R00	M.RESISTOR CH 1/10W 0	1	
R732	ERJ6GEYG112	M.RESISTOR CH 1/10W 1.1K	1	
R733	ERJ6GEYJ103	M.RESISTOR CH 1/10W 10K	1	
R734	ERJ6GEYJ183	M.RESISTOR CH 1/10W 18K	1	
R735	ERJ6GEYJ562	M.RESISTOR CH 1/10W 5.6K	1	
R736	ERJ6GEYJ104	M.RESISTOR CH 1/10W 100K	1	
R737,38	ERJ6GEYJ122	M.RESISTOR CH 1/10W 1.2K	2	
R739	VRE0034E362	M.RESISTOR CH 1/10W 3.6K	1	
R740	ERJ6GEYJ122	M.RESISTOR CH 1/10W 1.2K	1	
R741,42	ERJ6GEYJ103	M.RESISTOR CH 1/10W 10K	2	
R743	ERJ6GEYJ473	M.RESISTOR CH 1/10W 47K	1	
R744	ERJ6GEYJ473	M.RESISTOR CH 1/10W 47K	1	
R745	ERJ6GEYJ473	M.RESISTOR CH 1/10W 47K	1	
R801	ERJ6GEYJ104	M.RESISTOR CH 1/10W 100K	1	
R802,03	ERJ6GEYJ332	M.RESISTOR CH 1/10W 3.3K	2	
R804	ERJ6GEYJ102	M.RESISTOR CH 1/10W 1K	1	
R805	ERJ6GEYJ272	M.RESISTOR CH 1/10W 2.7K	1	
R806	ERJ6GEYJ102	M.RESISTOR CH 1/10W 1K	1	
R807,08	ERJ6GEYJ104	M.RESISTOR CH 1/10W 100K	2	
R809	ERJ6GEYJ472	M.RESISTOR CH 1/10W 4.7K	1	
R810	ERJ6GEYJ682	M.RESISTOR CH 1/10W 6.8K	1	
R818	ERJ6GEYJ272	M.RESISTOR CH 1/10W 2.7K	1	
R819,20	ERJ6GEYJ332	M.RESISTOR CH 1/10W 3.3K	2	
R828,29	ERJ6GEYJ821	M.RESISTOR CH 1/10W 820	2	
R830	ERJ6GEYJ681	M.RESISTOR CH 1/10W 680	1	
R831	ERJ6GEY0R00	M.RESISTOR CH 1/10W 0	1	
R832	ERJ6GEYG112	M.RESISTOR CH 1/10W 1.1K	1	
R833	ERJ6GEYJ103	M.RESISTOR CH 1/10W 10K	1	
R834	ERJ6GEYJ183	M.RESISTOR CH 1/10W 18K	1	
R835	ERJ6GEYJ562	M.RESISTOR CH 1/10W 5.6K	1	
R836	ERJ6GEYJ104	M.RESISTOR CH 1/10W 100K	1	
R837,38	ERJ6GEYJ122	M.RESISTOR CH 1/10W 1.2K	2	
R839	VRE0034E362	M.RESISTOR CH 1/10W 3.6K	1	
R840	ERJ6GEYJ122	M.RESISTOR CH 1/10W 1.2K	1	
R841,42	ERJ6GEYJ103	M.RESISTOR CH 1/10W 10K	2	
R843	ERJ6GEYJ473	M.RESISTOR CH 1/10W 47K	1	

Ref.No.	Part No.	Part Name & Description	Pcs	Remarks
R844	ERJ6GEYJ473	M.RESISTOR CH 1/10W 47K	1	
R845	ERJ6GEYJ273	M.RESISTOR CH 1/10W 27K	1	
R901	ERJ6GEYJ223	M.RESISTOR CH 1/10W 22K	1	
R904	ERJ6GEYJ103	M.RESISTOR CH 1/10W 10K	1	
R905	ERJ6GEYJ223	M.RESISTOR CH 1/10W 22K	1	
R906	ERJ6GEYJ102	M.RESISTOR CH 1/10W 1K	1	
R907	ERJ6GEYJ103	M.RESISTOR CH 1/10W 10K	1	
R909	ERJ6GEYJ101	M.RESISTOR CH 1/10W 100	1	
R910	ERJ6GEYJ103	M.RESISTOR CH 1/10W 10K	1	
R914	ERJ6GEYJ104	M.RESISTOR CH 1/10W 100K	1	
R917,18	ERJ6GEYJ561	M.RESISTOR CH 1/10W 560	2	
R919,20	ERJ6GEYJ222	M.RESISTOR CH 1/10W 2.2K	2	
R921	VRE0034E223	M.RESISTOR CH 1/10W 22K	1	
R922,23	ERJ6GEYJ104	M.RESISTOR CH 1/10W 100K	2	
R924	ERJ6GEYJ393	M.RESISTOR CH 1/10W 39K	1	
R925	ERJ6GEYJ123	M.RESISTOR CH 1/10W 12K	1	
R926	ERJ6GEYJ334	M.RESISTOR CH 1/10W 330K	1	
R927	ERJ6GEYJ103	M.RESISTOR CH 1/10W 10K	1	
R928	ERJ6GEYJ104	M.RESISTOR CH 1/10W 100K	1	
R929	ERJ6GEYJ562	M.RESISTOR CH 1/10W 5.6K	1	
R930-32	ERJ6GEYJ102	M.RESISTOR CH 1/10W 1K	3	
R933	ERJ6GEYJ392	M.RESISTOR CH 1/10W 3.9K	1	
R934	ERJ6GEYJ823	M.RESISTOR CH 1/10W 82K	1	
R935	ERJ6GEYJ273	M.RESISTOR CH 1/10W 27K	1	
R936	ERJ6GEYJ392	M.RESISTOR CH 1/10W 3.9K	1	
R937-39	ERJ6GEYJ102	M.RESISTOR CH 1/10W 1K	3	
R940	ERJ6GEYJ560	M.RESISTOR CH 1/10W 56	1	
R941	ERJ6GEYJ392	M.RESISTOR CH 1/10W 3.9K	1	
R942	ERJ6GEYJ102	M.RESISTOR CH 1/10W 1K	1	
R943	ERJ6GEYJ222	M.RESISTOR CH 1/10W 2.2K	1	
R944	ERJ6GEYJ823	M.RESISTOR CH 1/10W 82K	1	
R945	ERJ6GEYJ273	M.RESISTOR CH 1/10W 27K	1	
R946-48	ERJ6GEYJ102	M.RESISTOR CH 1/10W 1K	3	
R949	ERJ6GEYJ390	M.RESISTOR CH 1/10W 39	1	
R950	ERJ6GEYJ392	M.RESISTOR CH 1/10W 3.9K	1	
R951	ERJ6GEYJ102	M.RESISTOR CH 1/10W 1K	1	
R952	ERJ6GEYJ222	M.RESISTOR CH 1/10W 2.2K	1	
R953	ERJ6GEYJ823	M.RESISTOR CH 1/10W 82K	1	
R954	ERJ6GEYJ273	M.RESISTOR CH 1/10W 27K	1	
R955,56	ERJ6GEYJ102	M.RESISTOR CH 1/10W 1K	2	
R957	ERJ6GEYJ222	M.RESISTOR CH 1/10W 2.2K	1	
R958	ERJ6GEYJ823	M.RESISTOR CH 1/10W 82K	1	
R959	ERJ6GEYJ273	M.RESISTOR CH 1/10W 27K	1	
R960	ERJ6GEYJ101	M.RESISTOR CH 1/10W 100	1	
R961	ERJ6GEYJ103	M.RESISTOR CH 1/10W 10K	1	
R962	ERJ6GEYJ102	M.RESISTOR CH 1/10W 1K	1	
R963	ERJ6GEYJ560	M.RESISTOR CH 1/10W 56	1	
R964	ERJ6GEY0R00	M.RESISTOR CH 1/10W 0	1	
R965	ERJ6GEYJ223	M.RESISTOR CH 1/10W 22K	1	
SW101	VSS023703	SWITCH	1	
SW201	VSS023703	SWITCH	1	
SW301	VSS023703	SWITCH	1	
SW401	VSS023703	SWITCH	1	
T551,52	VLT0602	TRANSFORMER	2	
T553,54	VLT0603	TRANSFORMER	2	
T555	VLT0304	TRANSFORMER	1	
T556-58	VLT0603	TRANSFORMER	3	
TP1	VJR0646	TEST POINT	1	
TP101,02	VJR0646	TEST POINT	2	
TP104,05	VJR0646	TEST POINT	2	
TP201	VJR0646	TEST POINT	1	
TP301,02	VJR0646	TEST POINT	2	
TP304,05	VJR0646	TEST POINT	2	
TP401	VJR0646	TEST POINT	1	
TP501	VJR0646	TEST POINT	1	
TP551-58	VJR0646	TEST POINT	8	

Refer to the P.C.BOARDS LIST, page 6-1-1, before using this page.

Ref.No.		Part No.	Part Name & Description	Pcs	Remarks
TP601-09		VJR0646	TEST POINT	9	
TP702-04		VJR0646	TEST POINT	3	
TP802-04		VJR0646	TEST POINT	3	
TP901		VJR0646	TEST POINT	1	
TPG101		VJR0646	TEST POINT	1	
TPG301		VJR0646	TEST POINT	1	
TPG551		VJR0646	TEST POINT	1	
TPG901		VJR0646	TEST POINT	1	
VR101		VRV0109B103	V.RESISTOR 10K	1	
VR103		VRV0109B502	V.RESISTOR 5K	1	
VR201		VRV0109B203	V.RESISTOR 20K	1	
VR202		VRV0064B103	V.RESISTOR 10K	1	
VR203		VRV0109B502	V.RESISTOR 5K	1	
VR205		VRV0109B103	V.RESISTOR 10K	1	
VR206		VRV0109B502	V.RESISTOR 5K	1	
VR301		VRV0109B103	V.RESISTOR 10K	1	
VR303		VRV0109B502	V.RESISTOR 5K	1	
VR402		VRV0064B103	V.RESISTOR 10K	1	
VR403		VRV0109B502	V.RESISTOR 5K	1	
VR405		VRV0109B103	V.RESISTOR 10K	1	
VR406		VRV0109B502	V.RESISTOR 5K	1	
VR551,52		VRV0109B103	V.RESISTOR 10K	2	
VR701		VRV0109B203	V.RESISTOR 20K	1	
VR703		VRV0109B203	V.RESISTOR 20K	1	
VR704		VRV0109B303	V.RESISTOR 30K	1	
VR705		VRV0109B203	V.RESISTOR 20K	1	
VR801		VRV0109B203	V.RESISTOR 20K	1	
VR803-05		VRV0109B203	V.RESISTOR 20K	3	
VR901		VRV0109B502	V.RESISTOR 5K	1	
X551		VSX0246	CRYSTAL OSCILLATOR	1	
			MISCELLANEOUS		
		VJR0421	PIN	3	
		VML2143	CARD PULLER	1	
		VML2144	CARD PULLER	1	
		VMS4174	PIN	6	
		VMZ1547	BARRIER	1	
		VSC3056	SHIELD CASE	1	
		VXA3966	P.C.B. SHIELD PLATE	1	
		XNG26E	NUT	4	
		XYNV3+K6FR	SCREW	6	
		XYN26+C12	SCREW	4	

Refer to the P.C.BOARDS LIST, page 6-1-1, before using this page.

Ref.No.		Part No.	Part Name & Description	Pcs	Remarks
	■	VEP84095E	P.C.BOARD W/COMPONENT		FOR AU-63-E,B
			W6 AUDIO		AU-62-E,B
			CAPACITORS		
C1,C2		ECEA1CU470	E.CAPACITOR 16V 47U	2	
C3		ECEA0JU101	E.CAPACITOR 6.3V 100U	1	
C5		ECEA1CU100	E.CAPACITOR 16V 10U	1	
C6		ECUM1E473KBN	C.CAPACITOR CH 25V 0.047U	1	
C8		ECUM1E104ZFN	C.CAPACITOR CH 25V 0.1U	1	
C9		ECEA1CU100	E.CAPACITOR 16V 10U	1	
C10		ECEA1CN100S	E.CAPACITOR 16V 10U	1	
C11		ECUM1H272KBN	C.CAPACITOR CH 50V 2700P	1	
C12		ECEA1CU100	E.CAPACITOR 16V 10U	1	
C13,14		ECEA1CU470	E.CAPACITOR 16V 47U	2	
C106		ECUM1H470JCN	C.CAPACITOR CH 50V 47P	1	
C107		ECUM1E104ZFN	C.CAPACITOR CH 25V 0.1U	1	
C108		ECEA1CPZ101	E.CAPACITOR 16V 100U	1	
C109		ECEA1CBZ470	E.CAPACITOR 16V 47U	1	
C110		ECEA1CPZ101	E.CAPACITOR 16V 100U	1	
C111		ECUM1E104ZFN	C.CAPACITOR CH 25V 0.1U	1	
C112,13		ECEA1CPZ101	E.CAPACITOR 16V 100U	2	
C114		ECEA1CBZ100	E.CAPACITOR 16V 10U	1	
C115		ECUM1H220JCN	C.CAPACITOR CH 50V 22P	1	
C116		ECEA1CBZ100	E.CAPACITOR 16V 10U	1	
C118		ECEA1CPZ470	E.CAPACITOR 16V 47U	1	
C120		ECUM1H470JCN	C.CAPACITOR CH 50V 47P	1	
C121		ECUM1H820JCN	C.CAPACITOR CH 50V 82P	1	
C122		ECUM1H151JCN	C.CAPACITOR CH 50V 150P	1	
C124		ECUM1H470JCN	C.CAPACITOR CH 50V 47P	1	
C125		ECEA0JPZ471	E.CAPACITOR 6.3V 470U	1	
C127,28		ECEA1CPZ470	E.CAPACITOR 16V 47U	2	
C129		ECQM1H473JF	P.CAPACITOR 50V 0.047U	1	
C131,32		ECEA1CPZ470	E.CAPACITOR 16V 47U	2	
C133		ECUM1H562KBN	C.CAPACITOR CH 50V 5600P	1	
C134,35		ECEA1CBZ100	E.CAPACITOR 16V 10U	2	
C136		ECQP1H472FZ	P.CAPACITOR 50V 4700P	1	
C137		ECEA1CPZ100	E.CAPACITOR 16V 10U	1	
C138		ECQM1H473JF	P.CAPACITOR 50V 0.047U	1	
C139		ECEA1HPZR22	E.CAPACITOR 50V 0.22U	1	
C140,41		ECEA1HPZR68	E.CAPACITOR 50V 0.98U	2	
C142		ECEA1HPZR22	E.CAPACITOR 50V 0.22U	1	
C143		ECQM1H473JF	P.CAPACITOR 50V 0.047U	1	
C144		ECEA1CPZ100	E.CAPACITOR 16V 10U	1	
C145		ECQP1H472FZ	P.CAPACITOR 50V 4700P	1	
C147		ECQP1H103FZ	P.CAPACITOR 50V 0.01U	1	
C148,49		ECQM1H394JF	P.CAPACITOR 50V 0.39U	2	
C306		ECUM1H470JCN	C.CAPACITOR CH 50V 47P	1	
C307		ECUM1E104ZFN	C.CAPACITOR CH 25V 0.1U	1	
C308		ECEA1CPZ101	E.CAPACITOR 16V 100U	1	
C309		ECEA1CBZ470	E.CAPACITOR 16V 47U	1	
C310		ECEA1CPZ101	E.CAPACITOR 16V 100U	1	
C311		ECUM1E104ZFN	C.CAPACITOR CH 25V 0.1U	1	
C312,13		ECEA1CPZ101	E.CAPACITOR 16V 100U	2	
C314		ECEA1CBZ100	E.CAPACITOR 16V 10U	1	
C315		ECUM1H220JCN	C.CAPACITOR CH 50V 22P	1	
C316		ECEA1CBZ100	E.CAPACITOR 16V 10U	1	
C318		ECEA1CPZ470	E.CAPACITOR 16V 47U	1	
C320		ECUM1H470JCN	C.CAPACITOR CH 50V 47P	1	
C321		ECUM1H820JCN	C.CAPACITOR CH 50V 82P	1	
C322		ECUM1H151JCN	C.CAPACITOR CH 50V 150P	1	
C324		ECUM1H470JCN	C.CAPACITOR CH 50V 47P	1	
C325		ECEA0JPZ471	E.CAPACITOR 6.3V 470U	1	
C327,28		ECEA1CPZ470	E.CAPACITOR 16V 47U	2	
C329		ECQM1H473JF	P.CAPACITOR 50V 0.047U	1	
C331,32		ECEA1CPZ470	E.CAPACITOR 16V 47U	2	
C333		ECUM1H562KBN	C.CAPACITOR CH 50V 5600P	1	
C334,35		ECEA1CBZ100	E.CAPACITOR 16V 10U	2	
C336		ECQP1H472FZ	P.CAPACITOR 50V 4700P	1	

Ref.No.		Part No.	Part Name & Description	Pcs	Remarks
C337		ECEA1CPZ100	E.CAPACITOR 16V 10U	1	
C338		ECQM1H473JF	P.CAPACITOR 50V 0.047U	1	
C339		ECEA1HPZR22	E.CAPACITOR 50V 0.22U	1	
C340,41		ECEA1HPZR68	E.CAPACITOR 50V 0.98U	2	
C342		ECEA1HPZR22	E.CAPACITOR 50V 0.22U	1	
C343		ECQM1H473JF	P.CAPACITOR 50V 0.047U	1	
C344		ECEA1CPZ100	E.CAPACITOR 16V 10U	1	
C345		ECQP1H472FZ	P.CAPACITOR 50V 4700P	1	
C347		ECQP1H103FZ	P.CAPACITOR 50V 0.01U	1	
C348,49		ECQM1H394JF	P.CAPACITOR 50V 0.39U	2	
C501		ECEA1CU101	E.CAPACITOR 16V 100U	1	
C503		ECEA1CU220	E.CAPACITOR 16V 22U	1	
C553		ECEA1AU101	E.CAPACITOR 10V 100U	1	
C701		ECEA1CBZ470	E.CAPACITOR 16V 47U	1	
C702		ECUM1H182KBN	C.CAPACITOR CH 50V 1800P	1	
C703		ECUM1H821JCN	C.CAPACITOR CH 50V 820P	1	
C712		ECEA1HPZ4R7	E.CAPACITOR 50V 4.7U	1	
C713		ECEA1HPZ3R3	E.CAPACITOR 50V 3.3U	1	
C714		ECQM1H682JF	P.CAPACITOR 50V 6800P	1	
C715		ECQM1H102JF	P.CAPACITOR 50V 1000P	1	
C716		ECQM1H223JF	P.CAPACITOR 50V 0.022U	1	
C717		ECEA1CPZ100	E.CAPACITOR 16V 10U	1	
C719		ECEA1HPZ4R7	E.CAPACITOR 50V 4.7U	1	
C720		ECEA1CPZ470	E.CAPACITOR 16V 47U	1	
C721		ECQM1H103JF	P.CAPACITOR 50V 0.01U	1	
C722		ECQM1H332JF	P.CAPACITOR 50V 3300P	1	
C723		ECUM1H272KBN	C.CAPACITOR CH 50V 2700P	1	
C724,25		ECUM1H102KBN	C.CAPACITOR CH 50V 1000P	2	
C726		ECEA1CBZ100	E.CAPACITOR 16V 10U	1	
C727		ECEA1CPZ101	E.CAPACITOR 16V 100U	1	
C728		ECUM1E104ZFN	C.CAPACITOR CH 25V 0.1U	1	
C729,30		ECUM1H103KBN	C.CAPACITOR CH 50V 0.01U	2	
C732		ECQM1H223JF	P.CAPACITOR 50V 0.022U	1	
C733		ECUM1H122KBN	C.CAPACITOR CH 50V 1200P	1	
C801		ECEA1CBZ470	E.CAPACITOR 16V 47U	1	
C802		ECUM1H182KBN	C.CAPACITOR CH 50V 1800P	1	
C803		ECUM1H821JCN	C.CAPACITOR CH 50V 820P	1	
C804,05		ECUM1H222KBN	C.CAPACITOR CH 50V 2200P	2	
C812		ECEA1HPZ4R7	E.CAPACITOR 50V 4.7U	1	
C813		ECEA1HPZ3R3	E.CAPACITOR 50V 3.3U	1	
C814		ECQM1H682JF	P.CAPACITOR 50V 6800P	1	
C815		ECQM1H102JF	P.CAPACITOR 50V 1000P	1	
C816		ECQM1H223JF	P.CAPACITOR 50V 0.022U	1	
C817		ECEA1CPZ100	E.CAPACITOR 16V 10U	1	
C819		ECEA1HPZ4R7	E.CAPACITOR 50V 4.7U	1	
C820		ECEA1CPZ470	E.CAPACITOR 16V 47U	1	
C821		ECQM1H103JF	P.CAPACITOR 50V 0.01U	1	
C822		ECQM1H332JF	P.CAPACITOR 50V 3300P	1	
C823		ECUM1H272KBN	C.CAPACITOR CH 50V 2700P	1	
C824,25		ECUM1H102KBN	C.CAPACITOR CH 50V 1000P	2	
C826		ECEA1CBZ100	E.CAPACITOR 16V 10U	1	
C827		ECEA1CPZ101	E.CAPACITOR 16V 100U	1	
C828		ECUM1E104ZFN	C.CAPACITOR CH 25V 0.1U	1	
C829,30		ECUM1H103KBN	C.CAPACITOR CH 50V 0.01U	2	
C832		ECQM1H223JF	P.CAPACITOR 50V 0.022U	1	
C833		ECUM1H122KBN	C.CAPACITOR CH 50V 1200P	1	
C903		ECUM1E104ZFN	C.CAPACITOR CH 25V 0.1U	1	
C904		ECEA1CPZ101	E.CAPACITOR 16V 100U	1	
C905		ECUM1E104ZFN	C.CAPACITOR CH 25V 0.1U	1	
C906,07		ECEA1CPZ101	E.CAPACITOR 16V 100U	2	
C917		ECEA1CPZ100	E.CAPACITOR 16V 10U	1	
C918		ECUM1E104ZFN	C.CAPACITOR CH 25V 0.1U	1	
C920		ECUM1H151JCN	C.CAPACITOR CH 50V 150P	1	
C921,22		ECUM1H103KBN	C.CAPACITOR CH 50V 0.01U	2	
C923		ECUM1H331JCN	C.CAPACITOR CH 50V 330P	1	
C924		ECEA1HPZ010	E.CAPACITOR 50V 1U	1	
C925		ECQM1H223JF	P.CAPACITOR 50V 0.022U	1	
C926		ECUM1H103KBN	C.CAPACITOR CH 50V 0.01U	1	
C929		ECUM1H151JCN	C.CAPACITOR CH 50V 150P	1	
C930,31		ECUM1H103KBN	C.CAPACITOR CH 50V 0.01U	2	
C932		ECUM1H271JCN	C.CAPACITOR CH 50V 270P	1	
C933		ECUM1H391JCN	C.CAPACITOR CH 50V 390P	1	
C934,35		ECUM1H103KBN	C.CAPACITOR CH 50V 0.01U	2	
C936		ECEA1CU100	E.CAPACITOR 16V 10U	1	
C937		ECUM1E104ZFN	C.CAPACITOR CH 25V 0.1U	1	

Refer to the P.C.BOARDS LIST, page 6-1-1, before using this page.

Ref.No.		Part No.	Part Name & Description	Pcs	Remarks
C938-40		ECEA1CPZ101	E.CAPACITOR 16V 100U	3	
C941		ECEA1HPZ3R3	E.CAPACITOR 50V 3.3U	1	
C942		ECEA1CPZ470	E.CAPACITOR 16V 47U	1	
C944		ECUM1H103KBN	C.CAPACITOR CH 50V 0.01U	1	
C945,46		ECEA1CPZ101	E.CAPACITOR 16V 100U	2	
C947,48		ECEA1HPZ010	E.CAPACITOR 50V 1U	2	
C949		ECUM1E104ZFN	C.CAPACITOR CH 25V 0.1U	1	
C950		ECEA1CPZ101	E.CAPACITOR 16V 100U	1	
D1		MA153	DIODE	1	
D2		MA151K	DIODE	1	
D3,D4		MA3024	DIODE	2	
D7		MA151WK	DIODE	1	
D501		MA153	DIODE	1	
D502		MA151WA	DIODE	1	
D903		MA151K	DIODE	1	
FL101		EIR7QH007Q	FILTER	1	
FL102		VLF0829	FILTER	1	
FL103		ELM7Q306A	COIL	1	
FL301		EIR7QH007Q	FILTER	1	
FL302		VLF0829	FILTER	1	
FL303		ELM7Q306A	COIL	1	
FL901		ELB4L053	FILTER	1	
FL902		ELB4M043	FILTER	1	
IC2,C3		MC14053BF	IC	2	(R)
IC4		NJM4558M	IC	1	
IC5,C6		RC082BM	IC	2	
IC101		AN6558S	IC	1	
IC104		NJM4558M	IC	1	
IC105		TEA0666T	IC	1	
IC106		AN78N09	IC	1	
IC107		AN79N09	IC	1	
IC108		NJM4558M	IC	1	
IC301		AN6558S	IC	1	
IC304		NJM4558M	IC	1	
IC305		TEA0666T	IC	1	
IC306		AN78N09	IC	1	
IC307		AN79N09	IC	1	
IC308		NJM4558M	IC	1	
IC701		NJM4558M	IC	1	
IC703		NJM4558M	IC	1	
IC801		NJM4558M	IC	1	
IC803		NJM4558M	IC	1	
IC805		BA7700K1	IC	1	
IC901		AN78L12	IC	1	
IC902		AN78L05	IC	1	
IC903		AN79L09	IC	1	
IC904		AN78L09	IC	1	
L101,02		VLQEL05F101K	COIL 100UH	2	
L301,02		VLQEL05F101K	COIL 100UH	2	
L552		VLQEL05S471K	COIL 470UH	1	
L906,07		VLQEL05F101K	COIL 100UH	2	
L909		VLQEL05S271J	COIL 270UH	1	
L910-13		VLQEL05F101K	COIL 100UH	4	
P101		VJP1232R	CONNECTOR(MALE) 5P	1	
P301		VJP1232G	CONNECTOR(MALE)	1	
P553		VJP1230T	CONNECTOR(MALE) 3P	1	
Q1		2SD602	TRANSISTOR	1	(Q,R)

Ref.No.		Part No.	Part Name & Description	Pcs	Remarks
Q11		UN2211	TRANSISTOR-RESISTOR	1	
Q12		2SB710	TRANSISTOR	1	
Q14		UN2210	TRANSISTOR-RESISTOR	1	
Q107		2SD1328	TRANSISTOR CHIP	1	(Q,R)
Q108		UN2113	TRANSISTOR-RESISTOR	1	
Q114		2SK146	TRANSISTOR	1	(B,L)
Q115		2SD601	TRANSISTOR CHIP	1	(Q,R)
Q116		2SB709	TRANSISTOR CHIP	1	(Q,R)
Q117		2SD601	TRANSISTOR CHIP	1	(Q,R)
Q118-20		UN2213	TRANSISTOR-RESISTOR	3	
Q307		2SD1328	TRANSISTOR CHIP	1	(Q,R)
Q308		UN2113	TRANSISTOR-RESISTOR	1	
Q314		2SK146	TRANSISTOR	1	(B,L)
Q315		2SD601	TRANSISTOR CHIP	1	(Q,R)
Q316		2SB709	TRANSISTOR CHIP	1	(Q,R)
Q317		2SD601	TRANSISTOR CHIP	1	(Q,R)
Q318-20		UN2213	TRANSISTOR-RESISTOR	3	
Q501		2SB709	TRANSISTOR CHIP	1	(Q,R)
Q502		UN2113	TRANSISTOR-RESISTOR	1	
Q503		UN2213	TRANSISTOR-RESISTOR	1	
Q504		2SD602	TRANSISTOR	1	(Q,R)
Q701		2SD1328	TRANSISTOR CHIP	1	(Q,R)
Q702		2SD601	TRANSISTOR CHIP	1	(Q,R)
Q801		2SD1328	TRANSISTOR CHIP	1	(Q,R)
Q802		2SD601	TRANSISTOR CHIP	1	(Q,R)
Q911		2SD601	TRANSISTOR CHIP	1	(Q,R)
Q912		2SC2404	TRANSISTOR CHIP	1	(B,C)
Q913,14		2SD601	TRANSISTOR CHIP	2	(Q,R)
Q915		2SC2404	TRANSISTOR CHIP	1	(B,C)
Q916,17		2SD601	TRANSISTOR CHIP	2	(Q,R)
Q919		UN2213	TRANSISTOR-RESISTOR	1	
Q920		UN2113	TRANSISTOR-RESISTOR	1	
			RESISTORS		
R1		ERJ6GEYJ102	M.RESISTOR CH 1/10W 1K	1	
R2		ERJ6GEYJ223	M.RESISTOR CH 1/10W 22K	1	
R12		ERJ6GEYJ100	M.RESISTOR CH 1/10W 10	1	
R13		ERJ6GEYJ473	M.RESISTOR CH 1/10W 47K	1	
R14		ERJ6GEYJ102	M.RESISTOR CH 1/10W 1K	1	
R15		ERJ6GEY0R00	M.RESISTOR CH 1/10W 0	1	
R16		ERJ6GEYJ224	M.RESISTOR CH 1/10W 220K	1	
R17		ERJ6GEYJ562	M.RESISTOR CH 1/10W 5.6K	1	
R18		ERJ6GEYJ473	M.RESISTOR CH 1/10W 47K	1	
R19		ERJ6GEYJ331	M.RESISTOR CH 1/10W 330	1	
R20		ERJ6GEYJ473	M.RESISTOR CH 1/10W 47K	1	
R21		ERJ6GEYJ123	M.RESISTOR CH 1/10W 12K	1	
R22		ERJ6GEYJ104	M.RESISTOR CH 1/10W 100K	1	
R23		ERJ6GEYJ102	M.RESISTOR CH 1/10W 1K	1	
R24		ERJ6GEYJ470	M.RESISTOR CH 1/10W 47	1	
R25		ERJ6GEYJ332	M.RESISTOR CH 1/10W 3.3K	1	
R26		ERJ6GEYJ473	M.RESISTOR CH 1/10W 47K	1	
R27		ERJ6GEYJ472	M.RESISTOR CH 1/10W 4.7K	1	
R29		ERJ6GEYJ470	M.RESISTOR CH 1/10W 47	1	
R30		ERJ6GEYJ102	M.RESISTOR CH 1/10W 1K	1	
R39		ERJ6GEYJ104	M.RESISTOR CH 1/10W 100K	1	
R42		ERJ6GEYJ223	M.RESISTOR CH 1/10W 22K	1	
R44		ERJ6GEYJ104	M.RESISTOR CH 1/10W 100K	1	
R48		ERJ6GEYJ104	M.RESISTOR CH 1/10W 100K	1	
R50		ERDS2TJ223	C.RESISTOR 1/4W 22K	1	
R120		ERJ6GEYJ104	M.RESISTOR CH 1/10W 100K	1	
R121		ERJ6GEYJ102	M.RESISTOR CH 1/10W 1K	1	
R122		ERJ6GEYJ103	M.RESISTOR CH 1/10W 10K	1	
R123		ERJ6GEYJ102	M.RESISTOR CH 1/10W 1K	1	
R124		ERJ6GEYG112	M.RESISTOR CH 1/10W 1.1K	1	
R125		ERJ6GEY0R00	M.RESISTOR CH 1/10W 0	1	
R126		ERJ6GEYJ104	M.RESISTOR CH 1/10W 100K	1	
R127		ERJ6GEYJ102	M.RESISTOR CH 1/10W 1K	1	
R128		ERJ6GEYJ123	M.RESISTOR CH 1/10W 12K	1	
R129		ERJ6GEYJ104	M.RESISTOR CH 1/10W 100K	1	
R131		ERJ6GEYJ100	M.RESISTOR CH 1/10W 10	1	
R138,39		VRE0034E272	M.RESISTOR CH 1/10W 2.7K	2	
R140		ERJ6GEYJ103	M.RESISTOR CH 1/10W 10K	1	
R141		VRE0034E473	M.RESISTOR CH 1/10W 47K	1	

Refer to the P.C.BOARDS LIST, page 6-1-1, before using this page.

Ref.No.		Part No.	Part Name & Description	Pcs	Remarks
R142		VRE0034E272	M.RESISTOR CH 1/10W 2.7K	1	
R143		VRE0034E470	M.RESISTOR CH 1/10W 47	1	
R144		VRE0034E104	M.RESISTOR CH 1/10W 100K	1	
R145		ERJ6GEYJ102	M.RESISTOR CH 1/10W 1K	1	
R147		ERJ6GEYJ103	M.RESISTOR CH 1/10W 10K	1	
R148,49		ERJ6GEYJ102	M.RESISTOR CH 1/10W 1K	2	
R150		ERJ6GEYJ223	M.RESISTOR CH 1/10W 22K	1	
R151		ERJ6GEYJ102	M.RESISTOR CH 1/10W 1K	1	
R152		ERJ6GEYJ103	M.RESISTOR CH 1/10W 10K	1	
R153		ERJ6GEYJ221	M.RESISTOR CH 1/10W 220	1	
R154		ERJ6GEYJ101	M.RESISTOR CH 1/10W 100	1	
R155		ERJ6GEYJ272	M.RESISTOR CH 1/10W 2.7K	1	
R156		ERJ6GEYJ332	M.RESISTOR CH 1/10W 3.3K	1	
R157		VRE0034E102	M.RESISTOR CH 1/10W 1K	1	
R158		VRE0034E332	M.RESISTOR CH 1/10W 3.3K	1	
R159		ERJ6GEYJ221	M.RESISTOR CH 1/10W 220	1	
R160		VRE0034E823	M.RESISTOR CH 1/10W 82K	1	
R161		VRE0034E333	M.RESISTOR CH 1/10W 33K	1	
R162		VRE0034E823	M.RESISTOR CH 1/10W 82K	1	
R164		VRE0034E683	M.RESISTOR CH 1/10W 68K	1	
R165		VRE0034E222	M.RESISTOR CH 1/10W 2.2K	1	
R166		VRE0034E512	M.RESISTOR CH 1/10W 5.1K	1	
R167		VRE0034E822	M.RESISTOR CH 1/10W 8.2K	1	
R168		VRE0034E203	M.RESISTOR CH 1/10W 20K	1	
R169		VRE0034E821	M.RESISTOR CH 1/10W 820	1	
R320		ERJ6GEYJ104	M.RESISTOR CH 1/10W 100K	1	
R321		ERJ6GEYJ102	M.RESISTOR CH 1/10W 1K	1	
R322		ERJ6GEYJ103	M.RESISTOR CH 1/10W 10K	1	
R323		ERJ6GEYJ102	M.RESISTOR CH 1/10W 1K	1	
R324		ERJ6GEYG112	M.RESISTOR CH 1/10W 1.1K	1	
R325		ERJ6GEY0R00	M.RESISTOR CH 1/10W 0	1	
R326		ERJ6GEYJ104	M.RESISTOR CH 1/10W 100K	1	
R327		ERJ6GEYJ102	M.RESISTOR CH 1/10W 1K	1	
R328		ERJ6GEYJ123	M.RESISTOR CH 1/10W 12K	1	
R329		ERJ6GEYJ104	M.RESISTOR CH 1/10W 100K	1	
R331		ERJ6GEYJ100	M.RESISTOR CH 1/10W 10	1	
R338,39		VRE0034E272	M.RESISTOR CH 1/10W 2.7K	2	
R340		ERJ6GEYJ103	M.RESISTOR CH 1/10W 10K	1	
R341		VRE0034E473	M.RESISTOR CH 1/10W 47K	1	
R342		VRE0034E272	M.RESISTOR CH 1/10W 2.7K	1	
R343		VRE0034E470	M.RESISTOR CH 1/10W 47	1	
R344		VRE0034E104	M.RESISTOR CH 1/10W 100K	1	
R345		ERJ6GEYJ102	M.RESISTOR CH 1/10W 1K	1	
R347		ERJ6GEYJ103	M.RESISTOR CH 1/10W 10K	1	
R348,49		ERJ6GEYJ102	M.RESISTOR CH 1/10W 1K	2	
R350		ERJ6GEYJ223	M.RESISTOR CH 1/10W 22K	1	
R351		ERJ6GEYJ102	M.RESISTOR CH 1/10W 1K	1	
R352		ERJ6GEYJ103	M.RESISTOR CH 1/10W 10K	1	
R353		ERJ6GEYJ221	M.RESISTOR CH 1/10W 220	1	
R354		ERJ6GEYJ101	M.RESISTOR CH 1/10W 100	1	
R355		ERJ6GEYJ272	M.RESISTOR CH 1/10W 2.7K	1	
R356		ERJ6GEYJ332	M.RESISTOR CH 1/10W 3.3K	1	
R357		VRE0034E102	M.RESISTOR CH 1/10W 1K	1	
R358		VRE0034E332	M.RESISTOR CH 1/10W 3.3K	1	
R359		ERJ6GEYJ221	M.RESISTOR CH 1/10W 220	1	
R360		VRE0034E823	M.RESISTOR CH 1/10W 82K	1	
R361		VRE0034E333	M.RESISTOR CH 1/10W 33K	1	
R362		VRE0034E823	M.RESISTOR CH 1/10W 82K	1	
R364		VRE0034E683	M.RESISTOR CH 1/10W 68K	1	
R365		VRE0034E222	M.RESISTOR CH 1/10W 2.2K	1	
R366		VRE0034E512	M.RESISTOR CH 1/10W 5.1K	1	
R367		VRE0034E822	M.RESISTOR CH 1/10W 8.2K	1	
R368		VRE0034E203	M.RESISTOR CH 1/10W 20K	1	
R369		VRE0034E821	M.RESISTOR CH 1/10W 820	1	
R501		ERJ6GEYJ103	M.RESISTOR CH 1/10W 10K	1	
R502,03		ERJ6GEYJ223	M.RESISTOR CH 1/10W 22K	2	
R508		ERJ6GEYJ103	M.RESISTOR CH 1/10W 10K	1	
R509		ERJ6GEYJ223	M.RESISTOR CH 1/10W 22K	1	
R510		ERJ6GEYJ273	M.RESISTOR CH 1/10W 27K	1	
R511		ERJ6GEYJ103	M.RESISTOR CH 1/10W 10K	1	
R701		ERJ6GEYJ104	M.RESISTOR CH 1/10W 100K	1	
R702,03		ERJ6GEYJ332	M.RESISTOR CH 1/10W 3.3K	2	
R704		ERJ6GEYJ102	M.RESISTOR CH 1/10W 1K	1	
R705		ERJ6GEYJ272	M.RESISTOR CH 1/10W 2.7K	1	
R706		ERJ6GEYJ102	M.RESISTOR CH 1/10W 1K	1	

Ref.No.		Part No.	Part Name & Description	Pcs	Remarks
R707		ERJ6GEYJ104	M.RESISTOR CH 1/10W 100K	1	
R709		ERJ6GEYJ472	M.RESISTOR CH 1/10W 4.7K	1	
R710		ERJ6GEYJ682	M.RESISTOR CH 1/10W 6.8K	1	
R728,29		ERJ6GEYJ821	M.RESISTOR CH 1/10W 820	2	
R730		ERJ6GEYJ681	M.RESISTOR CH 1/10W 680	1	
R731		ERJ6GEY0R00	M.RESISTOR CH 1/10W 0	1	
R732		ERJ6GEYG112	M.RESISTOR CH 1/10W 1.1K	1	
R733		ERJ6GEYJ103	M.RESISTOR CH 1/10W 10K	1	
R734		ERJ6GEYJ183	M.RESISTOR CH 1/10W 18K	1	
R735		ERJ6GEYJ562	M.RESISTOR CH 1/10W 5.6K	1	
R736		ERJ6GEYJ104	M.RESISTOR CH 1/10W 100K	1	
R737,38		ERJ6GEYJ122	M.RESISTOR CH 1/10W 1.2K	2	
R739		VRE0034E362	M.RESISTOR CH 1/10W 3.6K	1	
R740		ERJ6GEYJ122	M.RESISTOR CH 1/10W 1.2K	1	
R741,42		ERJ6GEYJ103	M.RESISTOR CH 1/10W 10K	2	
R743		ERJ6GEYJ473	M.RESISTOR CH 1/10W 47K	1	
R743		ERJ6GEYJ561	M.RESISTOR CH 1/10W 560	1	
R744		ERJ6GEYJ473	M.RESISTOR CH 1/10W 47K	1	
R744		ERJ6GEYJ561	M.RESISTOR CH 1/10W 560	1	
R745		ERJ6GEYJ473	M.RESISTOR CH 1/10W 47K	1	
R801		ERJ6GEYJ104	M.RESISTOR CH 1/10W 100K	1	
R802,03		ERJ6GEYJ332	M.RESISTOR CH 1/10W 3.3K	2	
R804		ERJ6GEYJ102	M.RESISTOR CH 1/10W 1K	1	
R805		ERJ6GEYJ272	M.RESISTOR CH 1/10W 2.7K	1	
R806		ERJ6GEYJ102	M.RESISTOR CH 1/10W 1K	1	
R807		ERJ6GEYJ104	M.RESISTOR CH 1/10W 100K	1	
R809		ERJ6GEYJ472	M.RESISTOR CH 1/10W 4.7K	1	
R810		ERJ6GEYJ682	M.RESISTOR CH 1/10W 6.8K	1	
R828,29		ERJ6GEYJ821	M.RESISTOR CH 1/10W 820	2	
R830		ERJ6GEYJ681	M.RESISTOR CH 1/10W 680	1	
R831		ERJ6GEY0R00	M.RESISTOR CH 1/10W 0	1	
R832		ERJ6GEYG112	M.RESISTOR CH 1/10W 1.1K	1	
R833		ERJ6GEYJ103	M.RESISTOR CH 1/10W 10K	1	
R834		ERJ6GEYJ183	M.RESISTOR CH 1/10W 18K	1	
R835		ERJ6GEYJ562	M.RESISTOR CH 1/10W 5.6K	1	
R836		ERJ6GEYJ104	M.RESISTOR CH 1/10W 100K	1	
R837,38		ERJ6GEYJ122	M.RESISTOR CH 1/10W 1.2K	2	
R839		VRE0034E362	M.RESISTOR CH 1/10W 3.6K	1	
R840		ERJ6GEYJ122	M.RESISTOR CH 1/10W 1.2K	1	
R841,42		ERJ6GEYJ103	M.RESISTOR CH 1/10W 10K	2	
R843		ERJ6GEYJ473	M.RESISTOR CH 1/10W 47K	1	
R843		ERJ6GEYJ561	M.RESISTOR CH 1/10W 560	1	
R844		ERJ6GEYJ473	M.RESISTOR CH 1/10W 47K	1	
R844		ERJ6GEYJ561	M.RESISTOR CH 1/10W 560	1	
R845		ERJ6GEYJ273	M.RESISTOR CH 1/10W 27K	1	
R914		ERJ6GEYJ104	M.RESISTOR CH 1/10W 100K	1	
R917,18		ERJ6GEYJ561	M.RESISTOR CH 1/10W 560	2	
R919,20		ERJ6GEYJ222	M.RESISTOR CH 1/10W 2.2K	2	
R921		VRE0034E223	M.RESISTOR CH 1/10W 22K	1	
R922,23		ERJ6GEYJ104	M.RESISTOR CH 1/10W 100K	2	
R924		ERJ6GEYJ393	M.RESISTOR CH 1/10W 39K	1	
R925		ERJ6GEYJ123	M.RESISTOR CH 1/10W 12K	1	
R926		ERJ6GEYJ334	M.RESISTOR CH 1/10W 330K	1	
R927		ERJ6GEYJ103	M.RESISTOR CH 1/10W 10K	1	
R928		ERJ6GEYJ104	M.RESISTOR CH 1/10W 100K	1	
R939		ERJ6GEYJ102	M.RESISTOR CH 1/10W 1K	1	
R940		ERJ6GEYJ560	M.RESISTOR CH 1/10W 56	1	
R941		ERJ6GEYJ392	M.RESISTOR CH 1/10W 3.9K	1	
R942		ERJ6GEYJ102	M.RESISTOR CH 1/10W 1K	1	
R943		ERJ6GEYJ222	M.RESISTOR CH 1/10W 2.2K	1	
R944		ERJ6GEYJ823	M.RESISTOR CH 1/10W 82K	1	
R945		ERJ6GEYJ273	M.RESISTOR CH 1/10W 27K	1	
R946-48		ERJ6GEYJ102	M.RESISTOR CH 1/10W 1K	3	
R949		ERJ6GEYJ390	M.RESISTOR CH 1/10W 39	1	
R950		ERJ6GEYJ392	M.RESISTOR CH 1/10W 3.9K	1	
R951		ERJ6GEYJ102	M.RESISTOR CH 1/10W 1K	1	
R952		ERJ6GEYJ222	M.RESISTOR CH 1/10W 2.2K	1	
R953		ERJ6GEYJ823	M.RESISTOR CH 1/10W 82K	1	
R954		ERJ6GEYJ273	M.RESISTOR CH 1/10W 27K	1	
R955,56		ERJ6GEYJ102	M.RESISTOR CH 1/10W 1K	2	
R957		ERJ6GEYJ222	M.RESISTOR CH 1/10W 2.2K	1	
R958		ERJ6GEYJ823	M.RESISTOR CH 1/10W 82K	1	
R959		ERJ6GEYJ273	M.RESISTOR CH 1/10W 27K	1	
R960		ERJ6GEYJ101	M.RESISTOR CH 1/10W 100	1	
R961		ERJ6GEYJ103	M.RESISTOR CH 1/10W 10K	1	

Refer to the P.C.BOARDS LIST, page 6-1-1, before using this page.

Ref.No.		Part No.	Part Name & Description	Pcs	Remarks
R963		ERJ6GEYJ560	M.RESISTOR CH 1/10W 56	1	
SW101		VSS023703	SWITCH	1	
SW301		VSS023703	SWITCH	1	
TP1		VJR0646	TEST POINT	1	
TP101		VJR0646	TEST POINT	1	
TP301		VJR0646	TEST POINT	1	
TP501		VJR0646	TEST POINT	1	
TP702-04		VJR0646	TEST POINT	3	
TP802-04		VJR0646	TEST POINT	3	
TP901-03		VJR0646	TEST POINT	3	
TPG101		VJR0646	TEST POINT	1	
TPG301		VJR0646	TEST POINT	1	
TPG901		VJR0646	TEST POINT	1	
VR103		VRV0109B502	V.RESISTOR 5K	1	
VR303		VRV0109B502	V.RESISTOR 5K	1	
VR703		VRV0109B203	V.RESISTOR 20K	1	
VR704		VRV0109B303	V.RESISTOR 30K	1	
VR705		VRV0109B203	V.RESISTOR 20K	1	
VR803-05		VRV0109B203	V.RESISTOR 20K	3	
			MISCELLANEOUS		
		VML2143	CARD PULLER	1	
		VML2144	CARD PULLER	1	
		VMS4174	PIN	6	
		VMZ1547	BARRIER	1	
		VSC3056	SHIELD CASE	1	
		VXA3966	P.C.B. SHIELD PLATE	1	
		XNG26E	NUT	4	
		XYNV3+K6FR	SCREW	6	
		XYN26+C12	SCREW	4	

Refer to the P.C.BOARDS LIST, page 6-1-1, before using this page.

Ref.No.		Part No.	Part Name & Description	Pcs	Remarks
	■	VEP80549A	P.C.BOARD W/COMPONENT		FOR AU-65-P,E,B
			BO MOTHER 2		AU-62-P,E,B
B1L		VJS2899A096	CONNECTOR (FEMALE)	1	
B2L		VJS2899A096	CONNECTOR (FEMALE)	1	
B1R		VJS2899A096	CONNECTOR (FEMALE)	1	
			CAPACITORS		
C1		ECEA0JU221	E.CAPACITOR 6.3V 220U	1	
C2		ECQB1H473JF	P.CAPACITOR 50V 0.047U	1	
CN50		VJP2893A064	CONNECTOR(MALE)	1	
CN51		VJP1247T	CONNECTOR(MALE) 7P	1	
CN52		VJP1233T	CONNECTOR(MALE) 6P	1	
CN53		VJP2856A026	CONNECTOR(MALE)	1	
CN54		VJP1394T	CONNECTOR(MALE)	1	
CN55		VJP1931T	CONNECTOR(MALE)	1	
CN56		VJP1929T	CONNECTOR(MALE)	1	
CN57		VJP1393T	CONNECTOR(MALE) 13P	1	
CN58		VJP1248T	CONNECTOR(MALE) 8P	1	
CN59		VJP1930T	CONNECTOR	1	
CN610		VJP1243T	CONNECTOR(MALE) 3P	1	
P10		VJP1709	CONNECTOR(MALE)	1	
			MISCELLANEOUS		
		VMP2599	P.C.B. HOLDER ANGLE	1	
		XNG26E	NUT	6	
		XTV3+6F	SCREW	5	
		XYN26+C8	SCREW	6	

Refer to the P.C.BOARDS LIST, page 6-1-1, before using this page.

Ref.No.		Part No.	Part Name & Description	Pcs	Remarks
	■	VEP80549B	P.C.BOARD W/COMPONENT		FOR AU-63-P,E,B
			BO MOTHER 2		
B1L		VJS2899A096	CONNECTOR (FEMALE)	1	
B2L		VJS2899A096	CONNECTOR (FEMALE)	1	
B1R		VJS2899A096	CONNECTOR (FEMALE)	1	
			CAPACITORS		
C1		ECEA0JU221	E.CAPACITOR 6.3V 220U	1	
C2		ECQB1H473JF	P.CAPACITOR 50V 0.047U	1	
CN50		VJP2893A064	CONNECTOR (MALE)	1	
CN51		VJP1247T	CONNECTOR(MALE) 7P	1	
CN52		VJP1233T	CONNECTOR(MALE) 6P	1	
CN53		VJP2856A026	CONNECTOR (MALE)	1	
CN54		VJP1394T	CONNECTOR(MALE)	1	
CN55		VJP1931T	CONNECTOR (MALE)	1	
CN56		VJP1929T	CONNECTOR (MALE)	1	
CN57		VJP1393T	CONNECTOR(MALE) 13P	1	
CN58		VJP1248T	CONNECTOR(MALE) 8P	1	
CN59		VJP1930T	CONNECTOR	1	
CN60		VJP1246T	CONNECTOR(MALE) 6P	1	
CN610		VJP1243T	CONNECTOR(MALE) 3P	1	
P10		VJP1709	CONNECTOR (MALE)	1	
			MISCELLANEOUS		
		VMP2599	P.C.B. HOLDER ANGLE	1	
		XNG26E	NUT	6	
		XTV3+6F	SCREW	5	
		XYN26+C8	SCREW	6	

Refer to the P.C.BOARDS LIST, page 6-1-1, before using this page.

Ref.No.		Part No.	Part Name & Description	Pcs	Remarks
	■	VEP86088A	P.C.BOARD W/COMPONENT		FOR AU-65-P
			B1 SYSTEM CONTROL		
B1L		VJP2899B096	CONNECTOR (MALE)	1	
B1R		VJP2899B096	CONNECTOR (MALE)	1	
			CAPACITORS		
C1,C2		ECUM1H331JCN	C.CAPACITOR CH 50V 330P	2	
C3-C5		ECUM1H102JCN	C.CAPACITOR CH 50V 1000P	3	
C6-C9		ECUM1H103ZFN	C.CAPACITOR CH 50V 0.01U	4	
C10		ECEA0JU221	E.CAPACITOR 6.3V 220U	1	
C11		ECEA0JU101	E.CAPACITOR 6.3V 100U	1	
C12,13		ECUM1E104ZFN	C.CAPACITOR CH 25V 0.1U	2	
C14,15		ECUM1H270JCN	C.CAPACITOR CH 50V 27P	2	
C16-18		ECUM1H103ZFN	C.CAPACITOR CH 50V 0.01U	3	
C19		ECEA1HU3R3	E.CAPACITOR 50V 3.3U	1	
C20		ECQM1H104JF	P.CAPACITOR 50V 0.1U	1	
C21-23		ECUM1H103ZFN	C.CAPACITOR CH 50V 0.01U	3	
C25		ECEA0JU471	E.CAPACITOR 6.3V 470U	1	
C26,27		ECUM1H680JCN	C.CAPACITOR CH 50V 68P	2	
C28-33		ECUM1H103ZFN	C.CAPACITOR CH 50V 0.01U	6	
C34		ECUM1E104ZFN	C.CAPACITOR CH 25V 0.1U	1	
C35,36		ECUM1H103ZFN	C.CAPACITOR CH 50V 0.01U	2	
C37		ECEA1CU100	E.CAPACITOR 16V 10U	1	
C38-41		ECUM1E104ZFN	C.CAPACITOR CH 25V 0.1U	4	
C42-47		ECUM1H103ZFN	C.CAPACITOR CH 50V 0.01U	6	
C50		ECUM1H103ZFN	C.CAPACITOR CH 50V 0.01U	1	
C51		ECEA1CU100	E.CAPACITOR 16V 10U	1	
C52		ECUM1E104ZFN	C.CAPACITOR CH 25V 0.1U	1	
C53		ECUM1H103ZFN	C.CAPACITOR CH 50V 0.01U	1	
C75-82		ECUM1H103ZFN	C.CAPACITOR CH 50V 0.01U	8	
C83,84		ECEA1HU010	E.CAPACITOR 50V 1U	2	
C85		ECEA1CN100S	E.CAPACITOR 16V 10U	1	
C86		ECUM1H101JCN	C.CAPACITOR CH 50V 100P	1	
C87		ECUM1H103ZFN	C.CAPACITOR CH 50V 0.01U	1	
C88		ECEA1CN100S	E.CAPACITOR 16V 10U	1	
C89		ECUM1H101JCN	C.CAPACITOR CH 50V 100P	1	
C90		ECUM1H103ZFN	C.CAPACITOR CH 50V 0.01U	1	
C91		ECEA1HU010	E.CAPACITOR 50V 1U	1	
C92		ECUM1H103ZFN	C.CAPACITOR CH 50V 0.01U	1	
C93		ECQP1H392JZ	P.CAPACITOR 50V 3900P	1	
C94		ECEA1HU010	E.CAPACITOR 50V 1U	1	
C95		ECUM1H103ZFN	C.CAPACITOR CH 50V 0.01U	1	
C96-99		ECUM1E104ZFN	C.CAPACITOR CH 25V 0.1U	4	
C100,01		ECUM1E104ZFN	C.CAPACITOR CH 25V 0.1U	2	
C102-06		ECUM1H103ZFN	C.CAPACITOR CH 50V 0.01U	5	
C107		ECUM1E104ZFN	C.CAPACITOR CH 25V 0.1U	1	
C108-14		ECUM1H103ZFN	C.CAPACITOR CH 50V 0.01U	7	
C115		ECUM1E104ZFN	C.CAPACITOR CH 25V 0.1U	1	
C116-19		ECUM1H103ZFN	C.CAPACITOR CH 50V 0.01U	4	
C120		ECEA1HU010	E.CAPACITOR 50V 1U	1	
C121-23		ECUM1H103ZFN	C.CAPACITOR CH 50V 0.01U	3	
C124		ECUM1H150JCN	C.CAPACITOR CH 50V 15P	1	
C125		ECUM1H270JCN	C.CAPACITOR CH 50V 27P	1	
C127-38		ECUM1H103ZFN	C.CAPACITOR CH 50V 0.01U	12	
C140		ECUM1H103ZFN	C.CAPACITOR CH 50V 0.01U	1	
C141		ECEA1HU2R2	E.CAPACITOR 50V 2.2U	1	
C142		ECQM1H154JF	P.CAPACITOR 50V 0.15U	1	
C143		ECQM1H104JF	P.CAPACITOR 50V 0.1U	1	
C147,48		ECUM1H103ZFN	C.CAPACITOR CH 50V 0.01U	2	
C151		ECUM1H103ZFN	C.CAPACITOR CH 50V 0.01U	1	
C154		ECUM1H102JCN	C.CAPACITOR CH 50V 1000P	1	
C500-02		ECEA1EU4R7	E.CAPACITOR 25V 4.7U	3	
C503-05		ECEA1HN2R2S	E.CAPACITOR 50V 2.2U	3	
C506-08		ECEA1EU101	E.CAPACITOR 25V 100U	3	

Ref.No.		Part No.	Part Name & Description	Pcs	Remarks
D1		MA151WA	DIODE	1	
D2		MA153	DIODE	1	
D3		MA151K	DIODE	1	
D4,D5		MA151WA	DIODE	2	
D6-D9		MA151K	DIODE	4	
D10-13		MA151K	DIODE	4	
D15		MA151K	DIODE	1	
D16		MA151WK	DIODE	1	
D17		MA151WA	DIODE	1	
D18,19		MA151K	DIODE	2	
D20		MA151WK	DIODE	1	
D500		MA151K	DIODE	1	
D501-06		10E1	DIODE	6	
D507,08		MA151K	DIODE	2	
D509		10E1	DIODE	1	
D510		MA151WK	DIODE	1	
D511		MA3039H	DIODE	1	
D512		MA3075H	DIODE	1	
D513		MA3051H	DIODE	1	
D514		MA3056H	DIODE	1	
D515		MA3100M	DIODE	1	
IC1		MC14024BF	IC	1	
IC2		MC34051M	IC	1	
IC3		TMPZ84C43AF6	IC	1	
IC4		UPD71054GB	IC	1	
IC5		HD64180ZF8	IC	1	
IC6		TL7705CPSB	IC	1	
IC7		VSI0634E	IC	1	
IC8,C9		MC74HC541F	IC	2	
IC10		MBM221220	IC	1	
IC11		VSI0234	IC	1	
IC13		MC74HC4538F	IC	1	
IC14		MC74HC541F	IC	1	
IC15		MC74HC245AF	IC	1	
IC16,17		MC74HC138AF	IC	2	
IC18		MB89363BPF	IC	1	
IC19,20		MC14094BF	IC	2	
IC21		MB89363BPF	IC	1	
IC24		MC14013BF	IC	1	
IC25,26		MC14027BF	IC	2	
IC27-29		MC14538BF	IC	3	
IC30		MB621176PF	IC	1	
IC31		MB89363BPF	IC	1	
IC32,33		MC14021BF	IC	2	
IC34		MC14094BF	IC	1	
IC35		MB89363BPF	IC	1	
IC36-41		MC14021BF	IC	6	
IC42		MB89363BPF	IC	1	
IC43,44		MC14094BF	IC	2	
IC45		MC14021BF	IC	1	
IC46		M50455-001SP	IC	1	
IC47,48		MC14050BF	IC	2	
IC49		SN74LS38NS	IC	1	
IC50,51		MC74HC132F	IC	2	
IC52		MC74HC04AF	IC	1	
IC53,54		MC14049UBF	IC	2	
IC55		MC74HC00AF	IC	1	
IC56		N74F32D	IC	1	
IC57		MN4030BS	IC	1	
IC58		MC74HC541F	IC	1	
IC59		LM2903M	IC	1	
IC60,61		NJM2901M	IC	2	
IC62		MC74HC00AF	IC	1	
IC63		MC74HC138AF	IC	1	
IC64,65		MC14021BF	IC	2	
IC66,67		MC14094BF	IC	2	
IC68		MB89363BPF	IC	1	
IC69		TC74HC190F	IC	1	
IC71		MC14538BF	IC	1	
IC72		MC74HC86F	IC	1	

Refer to the P.C.BOARDS LIST, page 6-1-1, before using this page.

Ref.No.	Part No.	Part Name & Description	Pcs	Remarks
IC75	MN4030BS	IC	1	
IC500	PU3124	IC	1	
IC501	PU4124	IC	1	
IC502,03	BA6238AU2M	IC	2	
IC7S	VJS2336A032	CONNECTOR (FEMALE)	1	
IC10S	VJS2336A018	CONNECTOR (FEMALE)	1	
L1	VLP0017	COIL	1	
L2	VLQEL05S150J	COIL 15UH	1	
Q1	2SB710	TRANSISTOR	1	(Q,R)
Q2	DTC144EK	TRANSISTOR-RESISTOR	1	
Q3,Q4	DTC114YK	TRANSISTOR-RESISTOR	2	
Q5	UN2214	TRANSISTOR-RESISTOR	1	
Q15	2SB710	TRANSISTOR	1	(Q,R)
Q16	2SD602	TRANSISTOR	1	(Q,R)
Q17-22	DTC144EK	TRANSISTOR-RESISTOR	6	
Q25-47	DTC144EK	TRANSISTOR-RESISTOR	23	
Q48	2SD946A	TRANSISTOR	1	
Q49	DTC144EK	TRANSISTOR-RESISTOR	1	
Q500,01	UN2213	TRANSISTOR-RESISTOR	2	
Q502,03	2SB709	TRANSISTOR CHIP	2	(Q,R)
Q504	UN2213	TRANSISTOR-RESISTOR	1	
Q505,06	2SB709	TRANSISTOR CHIP	2	(Q,R)
Q507	UN2213	TRANSISTOR-RESISTOR	1	
Q508,09	2SB709	TRANSISTOR CHIP	2	(Q,R)
Q510-14	UN2213	TRANSISTOR-RESISTOR	5	
Q515	2SB709	TRANSISTOR CHIP	1	(Q,R)
		RESISTORS		
R1	ERJ6GEYJ223	M.RESISTOR CH 1/10W 22K	1	
R2	ERJ6GEYJ103	M.RESISTOR CH 1/10W 10K	1	
R3	ERJ6GEYJ223	M.RESISTOR CH 1/10W 22K	1	
R4	ERJ6GEYJ103	M.RESISTOR CH 1/10W 10K	1	
R5	ERJ6GEYJ562	M.RESISTOR CH 1/10W 5.6K	1	
R6	ERJ6GEYJ103	M.RESISTOR CH 1/10W 10K	1	
R7-R9	ERJ6GEYJ681	M.RESISTOR CH 1/10W 680	3	
R10	ERJ6GEYJ473	M.RESISTOR CH 1/10W 47K	1	
R11	ERJ6GEYJ152	M.RESISTOR CH 1/10W 1.5K	1	
R12	ERJ6GEYJ101	M.RESISTOR CH 1/10W 100	1	
R13,14	ERJ6GEYJ152	M.RESISTOR CH 1/10W 1.5K	2	
R15	ERJ6GEYJ101	M.RESISTOR CH 1/10W 100	1	
R16	ERJ6GEYJ152	M.RESISTOR CH 1/10W 1.5K	1	
R17	ERJ6GEYJ473	M.RESISTOR CH 1/10W 47K	1	
R18	ERJ6GEYJ472	M.RESISTOR CH 1/10W 4.7K	1	
R19-22	ERJ6GEYJ473	M.RESISTOR CH 1/10W 47K	4	
R23-31	ERJ6GEYJ103	M.RESISTOR CH 1/10W 10K	9	
R32	ERJ6GEYJ472	M.RESISTOR CH 1/10W 4.7K	1	
R33	ERJ6GEYJ102	M.RESISTOR CH 1/10W 1K	1	
R34	ERJ6GEYJ103	M.RESISTOR CH 1/10W 10K	1	
R35	ERJ6GEYJ473	M.RESISTOR CH 1/10W 47K	1	
R36	ERJ6GEYJ103	M.RESISTOR CH 1/10W 10K	1	
R37-47	ERJ6GEYJ473	M.RESISTOR CH 1/10W 47K	11	
R48	ERJ6GEYJ474	M.RESISTOR CH 1/10W 470K	1	
R49	ERJ6GEYJ103	M.RESISTOR CH 1/10W 10K	1	
R50	ERJ6GEYJ223	M.RESISTOR CH 1/10W 22K	1	
R51,52	ERJ6GEYJ473	M.RESISTOR CH 1/10W 47K	2	
R53	ERJ6GEYJ223	M.RESISTOR CH 1/10W 22K	1	
R54-72	ERJ6GEYJ103	M.RESISTOR CH 1/10W 10K	19	
R73-77	ERJ6GEYJ473	M.RESISTOR CH 1/10W 47K	5	
R79	ERJ6GEYJ473	M.RESISTOR CH 1/10W 47K	1	
R81-85	ERJ6GEYJ473	M.RESISTOR CH 1/10W 47K	5	
R86,87	ERJ6GEYJ223	M.RESISTOR CH 1/10W 22K	2	
R88	ERJ6GEYJ473	M.RESISTOR CH 1/10W 47K	1	
R93-96	ERJ6GEYJ473	M.RESISTOR CH 1/10W 47K	4	
R97	ERJ6GEYJ101	M.RESISTOR CH 1/10W 100	1	
R100	ERJ6GEYJ101	M.RESISTOR CH 1/10W 100	1	
R101	ERJ6GEYJ473	M.RESISTOR CH 1/10W 47K	1	
R102,03	ERJ6GEYJ101	M.RESISTOR CH 1/10W 100	2	

Ref.No.	Part No.	Part Name & Description	Pcs	Remarks
R104	ERJ6GEYJ223	M.RESISTOR CH 1/10W 22K	1	
R105	ERJ6GEYJ103	M.RESISTOR CH 1/10W 10K	1	
R106	ERJ6GEYJ474	M.RESISTOR CH 1/10W 470K	1	
R107-22	ERJ6GEYJ103	M.RESISTOR CH 1/10W 10K	16	
R123-25	ERJ6GEYJ101	M.RESISTOR CH 1/10W 100	3	
R126,27	ERJ6GEYJ562	M.RESISTOR CH 1/10W 5.6K	2	
R128	ERJ6GEYJ472	M.RESISTOR CH 1/10W 4.7K	1	
R129	ERJ6GEYJ223	M.RESISTOR CH 1/10W 22K	1	
R130-32	ERJ6GEYJ473	M.RESISTOR CH 1/10W 47K	3	
R133,34	ERJ6GEYJ562	M.RESISTOR CH 1/10W 5.6K	2	
R136	ERJ6GEYJ223	M.RESISTOR CH 1/10W 22K	1	
R137-43	ERJ6GEYJ473	M.RESISTOR CH 1/10W 47K	7	
R144	ERJ6GEYJ332	M.RESISTOR CH 1/10W 3.3K	1	
R145	ERJ6GEYJ101	M.RESISTOR CH 1/10W 100	1	
R146	ERJ6GEYJ223	M.RESISTOR CH 1/10W 22K	1	
R147	ERJ6GEYJ332	M.RESISTOR CH 1/10W 3.3K	1	
R148	ERJ6GEYJ101	M.RESISTOR CH 1/10W 100	1	
R149	ERJ6GEYJ102	M.RESISTOR CH 1/10W 1K	1	
R150	ERJ6GEYJ332	M.RESISTOR CH 1/10W 3.3K	1	
R151	ERJ6GEYJ101	M.RESISTOR CH 1/10W 100	1	
R152	ERJ6GEYJ223	M.RESISTOR CH 1/10W 22K	1	
R153	ERJ6GEYJ332	M.RESISTOR CH 1/10W 3.3K	1	
R154	ERJ6GEYJ101	M.RESISTOR CH 1/10W 100	1	
R155	ERJ6GEYJ102	M.RESISTOR CH 1/10W 1K	1	
R156,57	ERJ6GEYJ104	M.RESISTOR CH 1/10W 100K	2	
R158	ERJ6GEYJ332	M.RESISTOR CH 1/10W 3.3K	1	
R159	ERJ6GEYJ103	M.RESISTOR CH 1/10W 10K	1	
R160,61	ERJ6GEYJ102	M.RESISTOR CH 1/10W 1K	2	
R162	ERJ6GEYJ332	M.RESISTOR CH 1/10W 3.3K	1	
R163	ERJ6GEYJ103	M.RESISTOR CH 1/10W 10K	1	
R164	ERJ6GEYJ105	M.RESISTOR CH 1/10W 1M	1	
R165	ERJ6GEYJ223	M.RESISTOR CH 1/10W 22K	1	
R166	ERJ6GEYJ105	M.RESISTOR CH 1/10W 1M	1	
R167	ERJ6GEYJ223	M.RESISTOR CH 1/10W 22K	1	
R168,69	ERJ6GEYJ103	M.RESISTOR CH 1/10W 10K	2	
R170	ERJ6GEYJ104	M.RESISTOR CH 1/10W 100K	1	
R171	VREO034E623	M.RESISTOR CH 1/10W 62K	1	
R172	ERJ6GEYJ104	M.RESISTOR CH 1/10W 100K	1	
R173-83	ERJ6GEYJ103	M.RESISTOR CH 1/10W 10K	11	
R184-86	ERJ6GEYJ473	M.RESISTOR CH 1/10W 47K	3	
R187-91	ERJ6GEYJ103	M.RESISTOR CH 1/10W 10K	5	
R192,93	ERJ6GEYJ101	M.RESISTOR CH 1/10W 100	2	
R194-01	ERJ6GEYJ103	M.RESISTOR CH 1/10W 10K	8	
R202	ERJ6GEYJ473	M.RESISTOR CH 1/10W 47K	1	
R203-06	ERJ6GEYJ103	M.RESISTOR CH 1/10W 10K	4	
R207,08	ERJ6GEYJ223	M.RESISTOR CH 1/10W 22K	2	
R209,10	ERJ6GEYJ122	M.RESISTOR CH1/10W 1.2K	2	
R211	ERJ6GEYJ101	M.RESISTOR CH 1/10W 100	1	
R212	ERJ6GEYJ474	M.RESISTOR CH 1/10W 470K	1	
R213	ERJ6GEYJ103	M.RESISTOR CH 1/10W 10K	1	
R214	ERJ6GEYJ223	M.RESISTOR CH 1/10W 22K	1	
R215	ERJ6GEYJ473	M.RESISTOR CH 1/10W 47K	1	
R216,17	ERJ6GEYJ223	M.RESISTOR CH 1/10W 22K	2	
R218,19	ERJ6GEYJ101	M.RESISTOR CH 1/10W 100	2	
R220	ERJ6GEYJ223	M.RESISTOR CH 1/10W 22K	1	
R221	ERJ6GEYJ101	M.RESISTOR CH 1/10W 100	1	
R222	ERJ6GEYJ474	M.RESISTOR CH 1/10W 470K	1	
R223	ERJ6GEYJ103	M.RESISTOR CH 1/10W 10K	1	
R224	ERJ6GEYJ223	M.RESISTOR CH 1/10W 22K	1	
R225	ERJ6GEYJ102	M.RESISTOR CH 1/10W 1K	1	
R226	ERJ6GEYJ473	M.RESISTOR CH 1/10W 47K	1	
R227	ERJ6GEYJ103	M.RESISTOR CH 1/10W 10K	1	
R228	ERJ6GEYJ223	M.RESISTOR CH 1/10W 22K	1	
R229	ERJ6GEYJ473	M.RESISTOR CH 1/10W 47K	1	
R230	ERJ6GEYJ103	M.RESISTOR CH 1/10W 10K	1	
R231	ERJ6GEYJ101	M.RESISTOR CH 1/10W 100	1	
R232	ERJ6GEYJ223	M.RESISTOR CH 1/10W 22K	1	
R233,34	ERJ6GEYJ473	M.RESISTOR CH 1/10W 47K	2	
R235	ERJ6GEYJ223	M.RESISTOR CH 1/10W 22K	1	
R236-39	ERJ6GEYJ473	M.RESISTOR CH 1/10W 47K	4	
R240	ERJ6GEYJ103	M.RESISTOR CH 1/10W 10K	1	
R241-45	ERJ6GEYJ473	M.RESISTOR CH 1/10W 47K	5	
R247	ERJ6GEYJ103	M.RESISTOR CH 1/10W 10K	1	
R248,49	ERJ6GEYJ102	M.RESISTOR CH 1/10W 1K	2	
R250	ERJ6GEYJ223	M.RESISTOR CH 1/10W 22K	1	

Refer to the P.C.BOARDS LIST, page 6-1-1, before using this page.

Ref.No.		Part No.	Part Name & Description	Pcs	Remarks
R251		ERJ6GEYJ123	M.RESISTOR CH1/10W 12K	1	
R252		ERJ6GEYJ103	M.RESISTOR CH 1/10W 10K	1	
R253		ERJ6GEYJ393	M.RESISTOR CH 1/10W 39K	1	
R254		ERJ6GEYJ223	M.RESISTOR CH 1/10W 22K	1	
R255		ERJ6GEYJ562	M.RESISTOR CH 1/10W 5.6K	1	
R256		ERJ6GEYJ223	M.RESISTOR CH 1/10W 22K	1	
R257		ERJ6GEYJ473	M.RESISTOR CH 1/10W 47K	1	
R258		ERJ6GEYJ103	M.RESISTOR CH 1/10W 10K	1	
R259,60		ERJ6GEYJ223	M.RESISTOR CH 1/10W 22K	2	
R261		ERJ6GEYJ183	M.RESISTOR CH 1/10W 18K	1	
R262		ERJ6GEYJ103	M.RESISTOR CH 1/10W 10K	1	
R263		ERJ6GEYJ333	M.RESISTOR CH 1/10W 33K	1	
R264,65		ERJ6GEYJ473	M.RESISTOR CH 1/10W 47K	2	
R266,67		ERJ6GEYJ101	M.RESISTOR CH 1/10W 100	2	
R269		ERJ6GEYJ103	M.RESISTOR CH 1/10W 10K	1	
R270		ERJ6GEYJ101	M.RESISTOR CH 1/10W 100	1	
R272-77		ERJ6GEYJ103	M.RESISTOR CH 1/10W 10K	6	
R278-85		ERJ6GEYJ473	M.RESISTOR CH 1/10W 47K	8	
R286		ERJ6GEYJ103	M.RESISTOR CH 1/10W 10K	1	
R287		ERJ6GEYJ223	M.RESISTOR CH 1/10W 22K	1	
R288,89		ERJ6GEYJ103	M.RESISTOR CH 1/10W 10K	2	
R290		ERJ6GEYJ473	M.RESISTOR CH 1/10W 47K	1	
R294		ERJ6GEYJ103	M.RESISTOR CH 1/10W 10K	1	
R295		ERJ6GEYJ564	M.RESISTOR CH 1/10W 560K	1	
R296		ERJ6GEYJ473	M.RESISTOR CH 1/10W 47K	1	
R301		ERJ6GEYJ563	M.RESISTOR CH 1/10W 56K	1	
R302,03		ERJ6GEYJ333	M.RESISTOR CH 1/10W 33K	2	
R304		ERJ6GEYJ473	M.RESISTOR CH 1/10W 47K	1	
R502		ERJ6GEYJ122	M.RESISTOR CH1/10W 1.2K	1	
R504		ERJ6GEYJ222	M.RESISTOR CH 1/10W 2.2K	1	
R505		ERJ6GEYJ223	M.RESISTOR CH 1/10W 22K	1	
R506		ERJ6GEYJ103	M.RESISTOR CH 1/10W 10K	1	
R507		ERJ6GEYJ102	M.RESISTOR CH 1/10W 1K	1	
R508		ERJ6GEYJ104	M.RESISTOR CH 1/10W 100K	1	
R509		ERJ6GEYJ103	M.RESISTOR CH 1/10W 10K	1	
R510		ERJ6GEYJ223	M.RESISTOR CH 1/10W 22K	1	
R511		ERJ6GEYJ102	M.RESISTOR CH 1/10W 1K	1	
R512		ERJ6GEYJ104	M.RESISTOR CH 1/10W 100K	1	
R513		ERJ6GEYJ222	M.RESISTOR CH 1/10W 2.2K	1	
R514		ERJ6GEYJ223	M.RESISTOR CH 1/10W 22K	1	
R515		ERJ6GEYJ103	M.RESISTOR CH 1/10W 10K	1	
R516		ERJ6GEYJ102	M.RESISTOR CH 1/10W 1K	1	
R517		ERJ6GEYJ104	M.RESISTOR CH 1/10W 100K	1	
R518		ERJ6GEYJ223	M.RESISTOR CH 1/10W 22K	1	
R519		ERJ6GEYJ103	M.RESISTOR CH 1/10W 10K	1	
R520		ERJ6GEYJ102	M.RESISTOR CH 1/10W 1K	1	
R521		ERJ6GEYJ104	M.RESISTOR CH 1/10W 100K	1	
R522		ERJ6GEYJ222	M.RESISTOR CH 1/10W 2.2K	1	
R523		ERJ6GEYJ223	M.RESISTOR CH 1/10W 22K	1	
R524		ERJ6GEYJ103	M.RESISTOR CH 1/10W 10K	1	
R525		ERJ6GEYJ102	M.RESISTOR CH 1/10W 1K	1	
R526		ERJ6GEYJ104	M.RESISTOR CH 1/10W 100K	1	
R527		ERJ6GEYJ223	M.RESISTOR CH 1/10W 22K	1	
R528		ERJ6GEYJ103	M.RESISTOR CH 1/10W 10K	1	
R529		ERJ6GEYJ102	M.RESISTOR CH 1/10W 1K	1	
R530		ERJ6GEYJ104	M.RESISTOR CH 1/10W 100K	1	
R531,32		ERX1SJ1R0	M.RESISTOR 1W 1.0	2	
R533		ERJ6GEYJ104	M.RESISTOR CH 1/10W 100K	1	
R536		ERJ6GEYJ562	M.RESISTOR CH 1/10W 5.6K	1	
R537		ERJ6GEYJ222	M.RESISTOR CH 1/10W 2.2K	1	
R538		ERJ6GEYJ103	M.RESISTOR CH 1/10W 10K	1	
R539		ERJ6GEYJ223	M.RESISTOR CH 1/10W 22K	1	
R540		ERJ6GEYJ102	M.RESISTOR CH 1/10W 1K	1	
R541		ERJ6GEYJ104	M.RESISTOR CH 1/10W 100K	1	
R542		ERJ6GEYJ272	M.RESISTOR CH 1/10W 2.7K	1	
R543		ERJ6GEYJ271	M.RESISTOR CH 1/10W 270	1	
SW1,W2		VSS0223	SWITCH	2	
SW3		VSR0045	SWITCH	1	
SW4-W6		EVQQEJ06K	SWITCH	3	
SW7		VST0096	SWITCH	1	

Ref.No.		Part No.	Part Name & Description	Pcs	Remarks
TP17-19		VJR0582	PACK PIN	3	
TPG1,G2		VJR0582	PACK PIN	2	
VC1		ECV1ZW20X60	V.CAPACITOR 20P	1	
X1		VSX0373	CRYSTAL OSCILLATOR	1	
			MISCELLANEOUS		
		VML2143	CARD PULLER	1	
		VML2144	CARD PULLER	1	
		VMS4174	PIN	4	
		VMZ1548	BARRIER	1	
		VSC3057	SHIELD CASE	1	
		VSC3058	SHIELD CASE	1	
		VSC3059	SHIELD CASE	1	
		VXA3967	P.C.B. SHIELD PLATE	1	
		XNG26E	NUT	4	
		XNG3ES	NUT	2	
		XSN3+6S	SCREW	2	
		XYNV3+K6FR	SCREW	4	
		XYN26+C10	SCREW	1	

Refer to the P.C.BOARDS LIST, page 6-1-1, before using this page.

Ref.No.		Part No.	Part Name & Description	Pcs	Remarks
	■	VEP86088C	P.C.BOARD W/COMPONENT		FOR AU-62-P
			B1 SYSTEM CONTROL		
B1L		VJP2899B096	CONNECTOR(MALE)	1	
B1R		VJP2899B096	CONNECTOR(MALE)	1	
			CAPACITORS		
C1,C2		ECUM1H331JCN	C.CAPACITOR CH 50V 330P	2	
C3-C5		ECUM1H102JCN	C.CAPACITOR CH 50V 1000P	3	
C6-C9		ECUM1H103ZFN	C.CAPACITOR CH 50V 0.01U	4	
C10		ECEA0JU221	E.CAPACITOR 6.3V 220U	1	
C11		ECEA0JU101	E.CAPACITOR 6.3V 100U	1	
C12,13		ECUM1E104ZFN	C.CAPACITOR CH 25V 0.1U	2	
C14,15		ECUM1H270JCN	C.CAPACITOR CH 50V 27P	2	
C16-18		ECUM1H103ZFN	C.CAPACITOR CH 50V 0.01U	3	
C19		ECEA1HU3R3	E.CAPACITOR 50V 3.3U	1	
C20		ECQM1H104JF	P.CAPACITOR 50V 0.1U	1	
C21-23		ECUM1H103ZFN	C.CAPACITOR CH 50V 0.01U	3	
C25		ECEA0JU471	E.CAPACITOR 6.3V 470U	1	
C26,27		ECUM1H680JCN	C.CAPACITOR CH 50V 68P	2	
C28-33		ECUM1H103ZFN	C.CAPACITOR CH 50V 0.01U	6	
C34		ECUM1E104ZFN	C.CAPACITOR CH 25V 0.1U	1	
C35,36		ECUM1H103ZFN	C.CAPACITOR CH 50V 0.01U	2	
C37		ECEA1CU100	E.CAPACITOR 16V 10U	1	
C38-41		ECUM1E104ZFN	C.CAPACITOR CH 25V 0.1U	4	
C42-47		ECUM1H103ZFN	C.CAPACITOR CH 50V 0.01U	6	
C50		ECUM1H103ZFN	C.CAPACITOR CH 50V 0.01U	1	
C51		ECEA1CU100	E.CAPACITOR 16V 10U	1	
C52		ECUM1E104ZFN	C.CAPACITOR CH 25V 0.1U	1	
C53		ECUM1H103ZFN	C.CAPACITOR CH 50V 0.01U	1	
C75-82		ECUM1H103ZFN	C.CAPACITOR CH 50V 0.01U	8	
C83,84		ECEA1HU010	E.CAPACITOR 50V 1U	2	
C85		ECEA1CN100S	E.CAPACITOR 16V 10U	1	
C86		ECUM1H101JCN	C.CAPACITOR CH 50V 100P	1	
C87		ECUM1H103ZFN	C.CAPACITOR CH 50V 0.01U	1	
C88		ECEA1CN100S	E.CAPACITOR 16V 10U	1	
C89		ECUM1H101JCN	C.CAPACITOR CH 50V 100P	1	
C90		ECUM1H103ZFN	C.CAPACITOR CH 50V 0.01U	1	
C91		ECEA1HU010	E.CAPACITOR 50V 1U	1	
C92		ECUM1H103ZFN	C.CAPACITOR CH 50V 0.01U	1	
C93		ECQP1H392JZ	P.CAPACITOR 50V 3900P	1	
C94		ECEA1HU010	E.CAPACITOR 50V 1U	1	
C95		ECUM1H103ZFN	C.CAPACITOR CH 50V 0.01U	1	
C96-99		ECUM1E104ZFN	C.CAPACITOR CH 25V 0.1U	4	
C100,01		ECUM1E104ZFN	C.CAPACITOR CH 25V 0.1U	2	
C105,06		ECUM1H103ZFN	C.CAPACITOR CH 50V 0.01U	2	
C107		ECUM1E104ZFN	C.CAPACITOR CH 25V 0.1U	1	
C108-14		ECUM1H103ZFN	C.CAPACITOR CH 50V 0.01U	7	
C115		ECUM1E104ZFN	C.CAPACITOR CH 25V 0.1U	1	
C116-19		ECUM1H103ZFN	C.CAPACITOR CH 50V 0.01U	4	
C120		ECEA1HU010	E.CAPACITOR 50V 1U	1	
C121-23		ECUM1H103ZFN	C.CAPACITOR CH 50V 0.01U	3	
C124		ECUM1H150JCN	C.CAPACITOR CH 50V 15P	1	
C125		ECUM1H270JCN	C.CAPACITOR CH 50V 27P	1	
C127-38		ECUM1H103ZFN	C.CAPACITOR CH 50V 0.01U	12	
C140		ECUM1H103ZFN	C.CAPACITOR CH 50V 0.01U	1	
C141		ECEA1HU2R2	E.CAPACITOR 50V 2.2U	1	
C142		ECQM1H154JF	P.CAPACITOR 50V 0.15U	1	
C143		ECQM1H104JF	P.CAPACITOR 50V 0.1U	1	
C147,48		ECUM1H103ZFN	C.CAPACITOR CH 50V 0.01U	2	
C151		ECUM1H103ZFN	C.CAPACITOR CH 50V 0.01U	1	
C154		ECUM1H102JCN	C.CAPACITOR CH 50V 1000P	1	
C155		ECKF1H102KB	C.CAPACITOR 50V 1000P	1	
C500-02		ECEA1EU4R7	E.CAPACITOR 25V 4.7U	3	
C503-05		ECEA1HN2R2S	E.CAPACITOR 50V 2.2U	3	
C506-08		ECEA1EU101	E.CAPACITOR 25V 100U	3	

Ref.No.		Part No.	Part Name & Description	Pcs	Remarks
D1		MA151WA	DIODE	1	
D2		MA153	DIODE	1	
D3		MA151K	DIODE	1	
D4,D5		MA151WA	DIODE	2	
D7-D9		MA151K	DIODE	3	
D10-13		MA151K	DIODE	4	
D15		MA151K	DIODE	1	
D16		MA151WK	DIODE	1	
D17		MA151WA	DIODE	1	
D18,19		MA151K	DIODE	2	
D20		MA151WK	DIODE	1	
D500		MA151K	DIODE	1	
D501-06		10E1	DIODE	6	
D507,08		MA151K	DIODE	2	
D509		10E1	DIODE	1	
D510		MA151WK	DIODE	1	
D511		MA3039-H	DIODE	1	
D512		MA3075H	DIODE	1	
D513		MA3051-H	DIODE	1	
D514		MA3056-H	DIODE	1	
D515		MA3100-M	DIODE	1	
IC1		MC14024BF	IC	1	
IC2		MC34051M	IC	1	
IC3		TMPZ84C43AF6	IC	1	
IC4		UPD71054GB	IC	1	
IC5		HD6418OZF8	IC	1	
IC6		TL7705CPSB	IC	1	
IC7		VSI0683B	IC	1	
IC8,C9		MC74HC541F	IC	2	
IC10		MBM221220	IC	1	
IC11		VSI0234	IC	1	
IC13		MC74HC4538F	IC	1	
IC14		MC74HC541F	IC	1	
IC15		MC74HC245AF	IC	1	
IC16,17		MC74HC138AF	IC	2	
IC18		MB89363BPF	IC	1	
IC19,20		MC14094BF	IC	2	
IC21		MB89363BPF	IC	1	
IC24		MC14013BF	IC	1	
IC25,26		MC14027BF	IC	2	
IC27-29		MC14538BF	IC	3	
IC30		MB621176PF	IC	1	
IC31		MB89363BPF	IC	1	
IC34		MC14094BF	IC	1	
IC35		MB89363BPF	IC	1	
IC36-41		MC14021BF	IC	6	
IC42		MB89363BPF	IC	1	
IC43,44		MC14094BF	IC	2	
IC45		MC14021BF	IC	1	
IC46		M50455-001SP	IC	1	
IC47,48		MC14050BF	IC	2	
IC49		SN74LS38NS	IC	1	
IC50,51		MC74HC132F	IC	2	
IC52		MC74HC04AF	IC	1	
IC53,54		MC14049UBF	IC	2	
IC55		MC74HC00AF	IC	1	
IC56		M74F32FP	IC	1	
IC57		MN4030BS	IC	1	
IC58		MC74HC541F	IC	1	
IC59		LM2903M	IC	1	
IC60,61		NJM2901M	IC	2	
IC62		MC74HC00AF	IC	1	
IC63		MC74HC138AF	IC	1	
IC64,65		MC14021BF	IC	2	
IC66,67		MC14094BF	IC	2	
IC68		MB89363BPF	IC	1	
IC69		TC74HC190AF	IC	1	
IC71		MC14538BF	IC	1	
IC72		MC74HC86F	IC	1	

Refer to the P.C.BOARDS LIST, page 6-1-1, before using this page.

Ref.No.		Part No.	Part Name & Description	Pcs	Remarks
IC75		MN4030BS	IC	1	
IC500		PU3124	IC	1	
IC501		PU4124	IC	1	
IC502,03		BA6238AU2M	IC	2	
IC7S		VJS2336A032	CONNECTOR (FEMALE)	1	
IC10S		VJS2336A018	CONNECTOR (FEMALE)	1	
L1		VLP0017	COIL	1	
L2		VLQEL05S150J	COIL 15UH	1	
Q1		2SB710-R	TRANSISTOR	1	(Q,R)
Q2		DTC144EK	TRANSISTOR-RESISTOR	1	
Q3,Q4		DTC114YK	TRANSISTOR-RESISTOR	2	
Q5		UN2214	TRANSISTOR-RESISTOR	1	
Q9		UN2214	TRANSISTOR-RESISTOR	1	
Q15		2SB710-R	TRANSISTOR	1	(Q,R)
Q16		2SD602-R	TRANSISTOR	1	(Q,R)
Q17-22		DTC144EK	TRANSISTOR-RESISTOR	6	
Q25-27		DTC144EK	TRANSISTOR-RESISTOR	3	
Q29-35		DTC144EK	TRANSISTOR-RESISTOR	7	
Q38-42		DTC144EK	TRANSISTOR-RESISTOR	5	
Q44		DTC144EK	TRANSISTOR-RESISTOR	1	
Q46,47		DTC144EK	TRANSISTOR-RESISTOR	2	
Q48		2SD946A	TRANSISTOR	1	
Q500,01		UN2213	TRANSISTOR-RESISTOR	2	
Q502,03		2SB709-R	TRANSISTOR CHIP	2	(Q,R)
Q504		UN2213	TRANSISTOR-RESISTOR	1	
Q505,06		2SB709-R	TRANSISTOR CHIP	2	(Q,R)
Q507		UN2213	TRANSISTOR-RESISTOR	1	
Q508,09		2SB709-R	TRANSISTOR CHIP	2	(Q,R)
Q510-14		UN2213	TRANSISTOR-RESISTOR	5	
Q515		2SB709-R	TRANSISTOR CHIP	1	(Q,R)
			RESISTORS		
R1		ERJ6GEYJ223	M.RESISTOR CH 1/10W 22K	1	
R2		ERJ6GEY0R00	M.RESISTOR CH 1/10W 0	1	
R3		ERJ6GEYJ223	M.RESISTOR CH 1/10W 22K	1	
R4		ERJ6GEY0R00	M.RESISTOR CH 1/10W 0	1	
R5		ERJ6GEYJ562	M.RESISTOR CH 1/10W 5.6K	1	
R6		ERJ6GEYJ103	M.RESISTOR CH 1/10W 10K	1	
R7-R9		ERJ6GEYJ681	M.RESISTOR CH 1/10W 680	3	
R10		ERJ6GEYJ473	M.RESISTOR CH 1/10W 47K	1	
R11		ERJ6GEYJ152	M.RESISTOR CH 1/10W 1.5K	1	
R12		ERJ6GEYJ101	M.RESISTOR CH 1/10W 100	1	
R13,14		ERJ6GEYJ152	M.RESISTOR CH 1/10W 1.5K	2	
R15		ERJ6GEYJ101	M.RESISTOR CH 1/10W 100	1	
R16		ERJ6GEYJ152	M.RESISTOR CH 1/10W 1.5K	1	
R17		ERJ6GEYJ473	M.RESISTOR CH 1/10W 47K	1	
R18		ERJ6GEYJ472	M.RESISTOR CH 1/10W 4.7K	1	
R19-22		ERJ6GEYJ473	M.RESISTOR CH 1/10W 47K	4	
R23-31		ERJ6GEYJ103	M.RESISTOR CH 1/10W 10K	9	
R32		ERJ6GEYJ472	M.RESISTOR CH 1/10W 4.7K	1	
R33		ERJ6GEYJ102	M.RESISTOR CH 1/10W 1K	1	
R34		ERJ6GEYJ103	M.RESISTOR CH 1/10W 10K	1	
R35		ERJ6GEYJ473	M.RESISTOR CH 1/10W 47K	1	
R36		ERJ6GEYJ103	M.RESISTOR CH 1/10W 10K	1	
R37-47		ERJ6GEYJ473	M.RESISTOR CH 1/10W 47K	11	
R48		ERJ6GEYJ474	M.RESISTOR CH 1/10W 470K	1	
R49		ERJ6GEYJ103	M.RESISTOR CH 1/10W 10K	1	
R50		ERJ6GEYJ223	M.RESISTOR CH 1/10W 22K	1	
R51,52		ERJ6GEYJ473	M.RESISTOR CH 1/10W 47K	2	
R53		ERJ6GEYJ223	M.RESISTOR CH 1/10W 22K	1	
R54-72		ERJ6GEYJ103	M.RESISTOR CH 1/10W 10K	19	
R73-77		ERJ6GEYJ473	M.RESISTOR CH 1/10W 47K	5	
R79		ERJ6GEYJ473	M.RESISTOR CH 1/10W 47K	1	
R81-85		ERJ6GEYJ473	M.RESISTOR CH 1/10W 47K	5	
R86,87		ERJ6GEYJ223	M.RESISTOR CH 1/10W 22K	2	
R88		ERJ6GEYJ473	M.RESISTOR CH 1/10W 47K	1	
R93-96		ERJ6GEYJ473	M.RESISTOR CH 1/10W 47K	4	

Ref.No.		Part No.	Part Name & Description	Pcs	Remarks
R97		ERJ6GEYJ101	M.RESISTOR CH 1/10W 100	1	
R100		ERJ6GEYJ101	M.RESISTOR CH 1/10W 100	1	
R101		ERJ6GEYJ473	M.RESISTOR CH 1/10W 47K	1	
R102,03		ERJ6GEYJ101	M.RESISTOR CH 1/10W 100	2	
R104		ERJ6GEYJ223	M.RESISTOR CH 1/10W 22K	1	
R105		ERJ6GEYJ103	M.RESISTOR CH 1/10W 10K	1	
R106		ERJ6GEYJ474	M.RESISTOR CH 1/10W 470K	1	
R107-22		ERJ6GEYJ103	M.RESISTOR CH 1/10W 10K	16	
R123-25		ERJ6GEYJ101	M.RESISTOR CH 1/10W 100	3	
R126,27		ERJ6GEYJ562	M.RESISTOR CH 1/10W 5.6K	2	
R128		ERJ6GEYJ472	M.RESISTOR CH 1/10W 4.7K	1	
R129		ERJ6GEYJ223	M.RESISTOR CH 1/10W 22K	1	
R130-32		ERJ6GEYJ473	M.RESISTOR CH 1/10W 47K	3	
R133,34		ERJ6GEYJ562	M.RESISTOR CH 1/10W 5.6K	2	
R135		ERJ6GEYJ101	M.RESISTOR CH 1/10W 100	1	
R136		ERJ6GEYJ223	M.RESISTOR CH 1/10W 22K	1	
R137-43		ERJ6GEYJ473	M.RESISTOR CH 1/10W 47K	7	
R144		ERJ6GEYJ332	M.RESISTOR CH 1/10W 3.3K	1	
R145		ERJ6GEYJ101	M.RESISTOR CH 1/10W 100	1	
R146		ERJ6GEYJ223	M.RESISTOR CH 1/10W 22K	1	
R147		ERJ6GEYJ332	M.RESISTOR CH 1/10W 3.3K	1	
R148		ERJ6GEYJ101	M.RESISTOR CH 1/10W 100	1	
R149		ERJ6GEYJ102	M.RESISTOR CH 1/10W 1K	1	
R150		ERJ6GEYJ332	M.RESISTOR CH 1/10W 3.3K	1	
R151		ERJ6GEYJ101	M.RESISTOR CH 1/10W 100	1	
R152		ERJ6GEYJ223	M.RESISTOR CH 1/10W 22K	1	
R153		ERJ6GEYJ332	M.RESISTOR CH 1/10W 3.3K	1	
R154		ERJ6GEYJ101	M.RESISTOR CH 1/10W 100	1	
R155		ERJ6GEYJ102	M.RESISTOR CH 1/10W 1K	1	
R156,57		ERJ6GEYJ104	M.RESISTOR CH 1/10W 100K	2	
R158		ERJ6GEYJ332	M.RESISTOR CH 1/10W 3.3K	1	
R159		ERJ6GEYJ103	M.RESISTOR CH 1/10W 10K	1	
R160,61		ERJ6GEYJ102	M.RESISTOR CH 1/10W 1K	2	
R162		ERJ6GEYJ332	M.RESISTOR CH 1/10W 3.3K	1	
R163		ERJ6GEYJ103	M.RESISTOR CH 1/10W 10K	1	
R164		ERJ6GEYJ105	M.RESISTOR CH 1/10W 1M	1	
R165		ERJ6GEYJ223	M.RESISTOR CH 1/10W 22K	1	
R166		ERJ6GEYJ105	M.RESISTOR CH 1/10W 1M	1	
R167		ERJ6GEYJ223	M.RESISTOR CH 1/10W 22K	1	
R168,69		ERJ6GEYJ103	M.RESISTOR CH 1/10W 10K	2	
R170		ERJ6GEYJ104	M.RESISTOR CH 1/10W 100K	1	
R171		VRE0034E623	M.RESISTOR CH 1/10W 62K	1	
R172		ERJ6GEYJ104	M.RESISTOR CH 1/10W 100K	1	
R173-83		ERJ6GEYJ103	M.RESISTOR CH 1/10W 10K	11	
R184-86		ERJ6GEYJ473	M.RESISTOR CH 1/10W 47K	3	
R187-91		ERJ6GEYJ103	M.RESISTOR CH 1/10W 10K	5	
R192,93		ERJ6GEYJ101	M.RESISTOR CH 1/10W 100	2	
R194-01		ERJ6GEYJ103	M.RESISTOR CH 1/10W 10K	8	
R202		ERJ6GEYJ473	M.RESISTOR CH 1/10W 47K	1	
R203-06		ERJ6GEYJ103	M.RESISTOR CH 1/10W 10K	4	
R207,08		ERJ6GEYJ223	M.RESISTOR CH 1/10W 22K	2	
R209,10		ERJ6GEYJ122	M.RESISTOR CH 1/10W 1.2K	2	
R211		ERJ6GEYJ101	M.RESISTOR CH 1/10W 100	1	
R212		ERJ6GEYJ474	M.RESISTOR CH 1/10W 470K	1	
R213		ERJ6GEYJ103	M.RESISTOR CH 1/10W 10K	1	
R214		ERJ6GEYJ223	M.RESISTOR CH 1/10W 22K	1	
R215		ERJ6GEYJ473	M.RESISTOR CH 1/10W 47K	1	
R216,17		ERJ6GEYJ223	M.RESISTOR CH 1/10W 22K	2	
R218,19		ERJ6GEYJ101	M.RESISTOR CH 1/10W 100	2	
R220		ERJ6GEYJ223	M.RESISTOR CH 1/10W 22K	1	
R221		ERJ6GEYJ101	M.RESISTOR CH 1/10W 100	1	
R222		ERJ6GEYJ474	M.RESISTOR CH 1/10W 470K	1	
R223		ERJ6GEYJ103	M.RESISTOR CH 1/10W 10K	1	
R224		ERJ6GEYJ223	M.RESISTOR CH 1/10W 22K	1	
R225		ERJ6GEYJ102	M.RESISTOR CH 1/10W 1K	1	
R226		ERJ6GEYJ473	M.RESISTOR CH 1/10W 47K	1	
R227		ERJ6GEYJ103	M.RESISTOR CH 1/10W 10K	1	
R228		ERJ6GEYJ223	M.RESISTOR CH 1/10W 22K	1	
R229		ERJ6GEYJ473	M.RESISTOR CH 1/10W 47K	1	
R230		ERJ6GEYJ103	M.RESISTOR CH 1/10W 10K	1	
R231		ERJ6GEYJ101	M.RESISTOR CH 1/10W 100	1	
R232		ERJ6GEYJ223	M.RESISTOR CH 1/10W 22K	1	
R233,34		ERJ6GEYJ473	M.RESISTOR CH 1/10W 47K	2	
R235		ERJ6GEYJ223	M.RESISTOR CH 1/10W 22K	1	
R236-39		ERJ6GEYJ473	M.RESISTOR CH 1/10W 47K	4	

Refer to the P.C.BOARDS LIST, page 6-1-1, before using this page.

Ref.No.		Part No.	Part Name & Description	Pcs	Remarks
R240		ERJ6GEYJ103	M.RESISTOR CH 1/10W 10K	1	
R241-45		ERJ6GEYJ473	M.RESISTOR CH 1/10W 47K	5	
R247		ERJ6GEYJ103	M.RESISTOR CH 1/10W 10K	1	
R248,49		ERJ6GEYJ102	M.RESISTOR CH 1/10W 1K	2	
R250		ERJ6GEYJ223	M.RESISTOR CH 1/10W 22K	1	
R251		ERJ6GEYJ123	M.RESISTOR CH 1/10W 12K	1	
R252		ERJ6GEYJ103	M.RESISTOR CH 1/10W 10K	1	
R253		ERJ6GEYJ393	M.RESISTOR CH 1/10W 39K	1	
R254		ERJ6GEYJ223	M.RESISTOR CH 1/10W 22K	1	
R255		ERJ6GEYJ562	M.RESISTOR CH 1/10W 5.6K	1	
R256		ERJ6GEYJ223	M.RESISTOR CH 1/10W 22K	1	
R257		ERJ6GEYJ473	M.RESISTOR CH 1/10W 47K	1	
R258		ERJ6GEYJ103	M.RESISTOR CH 1/10W 10K	1	
R259,60		ERJ6GEYJ223	M.RESISTOR CH 1/10W 22K	2	
R261		ERJ6GEYJ183	M.RESISTOR CH 1/10W 18K	1	
R262		ERJ6GEYJ103	M.RESISTOR CH 1/10W 10K	1	
R263		ERJ6GEYJ333	M.RESISTOR CH 1/10W 33K	1	
R264,65		ERJ6GEYJ473	M.RESISTOR CH 1/10W 47K	2	
R266-68		ERJ6GEYJ101	M.RESISTOR CH 1/10W 100	3	
R269		ERJ6GEYJ103	M.RESISTOR CH 1/10W 10K	1	
R270		ERJ6GEYJ101	M.RESISTOR CH 1/10W 100	1	
R272-77		ERJ6GEYJ103	M.RESISTOR CH 1/10W 10K	6	
R278-85		ERJ6GEYJ473	M.RESISTOR CH 1/10W 47K	8	
R286		ERJ6GEYJ103	M.RESISTOR CH 1/10W 10K	1	
R287		ERJ6GEYJ223	M.RESISTOR CH 1/10W 22K	1	
R288,89		ERJ6GEYJ103	M.RESISTOR CH 1/10W 10K	2	
R290		ERJ6GEYJ473	M.RESISTOR CH 1/10W 47K	1	
R291,92		ERJ6GEYJ101	M.RESISTOR CH 1/10W 100	2	
R294		ERJ6GEYJ103	M.RESISTOR CH 1/10W 10K	1	
R295		ERJ6GEYJ564	M.RESISTOR CH 1/10W 560K	1	
R296		ERJ6GEYJ473	M.RESISTOR CH 1/10W 47K	1	
R301		ERJ6GEYJ563	M.RESISTOR CH 1/10W 56K	1	
R302,03		ERJ6GEYJ333	M.RESISTOR CH 1/10W 33K	2	
R304		ERJ6GEYJ473	M.RESISTOR CH 1/10W 47K	1	
R502		ERJ6GEYJ122	M.RESISTOR CH 1/10W 1.2K	1	
R504		ERJ6GEYJ222	M.RESISTOR CH 1/10W 2.2K	1	
R505		ERJ6GEYJ223	M.RESISTOR CH 1/10W 22K	1	
R506		ERJ6GEYJ103	M.RESISTOR CH 1/10W 10K	1	
R507		ERJ6GEYJ102	M.RESISTOR CH 1/10W 1K	1	
R508		ERJ6GEYJ104	M.RESISTOR CH 1/10W 100K	1	
R509		ERJ6GEYJ103	M.RESISTOR CH 1/10W 10K	1	
R510		ERJ6GEYJ223	M.RESISTOR CH 1/10W 22K	1	
R511		ERJ6GEYJ102	M.RESISTOR CH 1/10W 1K	1	
R512		ERJ6GEYJ104	M.RESISTOR CH 1/10W 100K	1	
R513		ERJ6GEYJ222	M.RESISTOR CH 1/10W 2.2K	1	
R514		ERJ6GEYJ223	M.RESISTOR CH 1/10W 22K	1	
R515		ERJ6GEYJ103	M.RESISTOR CH 1/10W 10K	1	
R516		ERJ6GEYJ102	M.RESISTOR CH 1/10W 1K	1	
R517		ERJ6GEYJ104	M.RESISTOR CH 1/10W 100K	1	
R518		ERJ6GEYJ223	M.RESISTOR CH 1/10W 22K	1	
R519		ERJ6GEYJ103	M.RESISTOR CH 1/10W 10K	1	
R520		ERJ6GEYJ102	M.RESISTOR CH 1/10W 1K	1	
R521		ERJ6GEYJ104	M.RESISTOR CH 1/10W 100K	1	
R522		ERJ6GEYJ222	M.RESISTOR CH 1/10W 2.2K	1	
R523		ERJ6GEYJ223	M.RESISTOR CH 1/10W 22K	1	
R524		ERJ6GEYJ103	M.RESISTOR CH 1/10W 10K	1	
R525		ERJ6GEYJ102	M.RESISTOR CH 1/10W 1K	1	
R526		ERJ6GEYJ104	M.RESISTOR CH 1/10W 100K	1	
R527		ERJ6GEYJ223	M.RESISTOR CH 1/10W 22K	1	
R528		ERJ6GEYJ103	M.RESISTOR CH 1/10W 10K	1	
R529		ERJ6GEYJ102	M.RESISTOR CH 1/10W 1K	1	
R530		ERJ6GEYJ104	M.RESISTOR CH 1/10W 100K	1	
R531,32		ERX1SJ1R0	M.RESISTOR 1W 1	2	
R533		ERJ6GEYJ104	M.RESISTOR CH 1/10W 100K	1	
R536		ERJ6GEYJ562	M.RESISTOR CH 1/10W 5.6K	1	
R537		ERJ6GEYJ222	M.RESISTOR CH 1/10W 2.2K	1	
R538		ERJ6GEYJ103	M.RESISTOR CH 1/10W 10K	1	
R539		ERJ6GEYJ223	M.RESISTOR CH 1/10W 22K	1	
R540		ERJ6GEYJ102	M.RESISTOR CH 1/10W 1K	1	
R541		ERJ6GEYJ104	M.RESISTOR CH 1/10W 100K	1	
R542		ERJ6GEYJ272	M.RESISTOR CH 1/10W 2.7K	1	
R543		ERJ6GEYJ271	M.RESISTOR CH 1/10W 270	1	

Ref.No.		Part No.	Part Name & Description	Pcs	Remarks
SW1		VSS0223	SWITCH	1	
SW3		VSR0045	SWITCH	1	
SW4-W6		EVQQEJ06K	SWITCH	3	
SW7		VST0096	SWITCH	1	
TP17-19		VJR0646	TEST POINT	3	
TPG1,G2		VJR0646	TEST POINT	2	
VC1		ECV1ZW20X60	V.CAPACITOR 20P	1	
X1		VSX0373	CRYSTAL OSCILLATOR	1	
			MISCELLANEOUS		
		VML2143	CARD PULLER	1	
		VML2144	CARD PULLER	1	
		VMS4174	PIN	4	
		VMZ1548	BARRIER	1	
		VSC3057	SHIELD CASE	1	
		VSC3058	SHIELD CASE	1	
		VSC3059	SHIELD CASE	1	
		VXA3967	P.C.B. SHIELD PLATE	1	
		XNG26E	NUT	4	
		XNG3ES	NUT	2	
		XSN3+6S	SCREW	2	
		XYNV3+K6FR	SCREW	4	
		XYN26+C10	SCREW	1	

Refer to the P.C.BOARDS LIST, page 6-1-1, before using this page.

Ref.No.		Part No.	Part Name & Description	Pcs	Remarks
	■	VEP86088D	P.C.BOARD W/COMPONENT		FOR AU-63-P
			B1 SYSTEM CONTROL		
B1L		VJP2899B096	CONNECTOR(MALE)	1	
B1R		VJP2899B096	CONNECTOR(MALE)	1	
			CAPACITORS		
C1,C2		ECUM1H331JCN	C.CAPACITOR CH 50V 330P	2	
C3-C5		ECUM1H102JCN	C.CAPACITOR CH 50V 1000P	3	
C6-C9		ECUM1H103ZFN	C.CAPACITOR CH 50V 0.01U	4	
C10		ECEA0JU221	E.CAPACITOR 6.3V 220U	1	
C11		ECEA0JU101	E.CAPACITOR 6.3V 100U	1	
C12,13		ECUM1E104ZFN	C.CAPACITOR CH 25V 0.1U	2	
C14,15		ECUM1H270JCN	C.CAPACITOR CH 50V 27P	2	
C16-18		ECUM1H103ZFN	C.CAPACITOR CH 50V 0.01U	3	
C19		ECEA1HU3R3	E.CAPACITOR 50V 3.3U	1	
C20		ECQM1H104JF	P.CAPACITOR 50V 0.1U	1	
C21-23		ECUM1H103ZFN	C.CAPACITOR CH 50V 0.01U	3	
C25		ECEA0JU471	E.CAPACITOR 6.3V 470U	1	
C26,27		ECUM1H680JCN	C.CAPACITOR CH 50V 68P	2	
C28-33		ECUM1H103ZFN	C.CAPACITOR CH 50V 0.01U	6	
C34		ECUM1E104ZFN	C.CAPACITOR CH 25V 0.1U	1	
C35,36		ECUM1H103ZFN	C.CAPACITOR CH 50V 0.01U	2	
C37		ECEA1CU100	E.CAPACITOR 16V 10U	1	
C38-41		ECUM1E104ZFN	C.CAPACITOR CH 25V 0.1U	4	
C42-47		ECUM1H103ZFN	C.CAPACITOR CH 50V 0.01U	6	
C50		ECUM1H103ZFN	C.CAPACITOR CH 50V 0.01U	1	
C51		ECEA1CU100	E.CAPACITOR 16V 10U	1	
C52		ECUM1E104ZFN	C.CAPACITOR CH 25V 0.1U	1	
C53		ECUM1H103ZFN	C.CAPACITOR CH 50V 0.01U	1	
C75-82		ECUM1H103ZFN	C.CAPACITOR CH 50V 0.01U	8	
C83,84		ECEA1HU010	E.CAPACITOR 50V 1U	2	
C85		ECEA1CN100S	E.CAPACITOR 16V 10U	1	
C86		ECUM1H101JCN	C.CAPACITOR CH 50V 100P	1	
C87		ECUM1H103ZFN	C.CAPACITOR CH 50V 0.01U	1	
C88		ECEA1CN100S	E.CAPACITOR 16V 10U	1	
C89		ECUM1H101JCN	C.CAPACITOR CH 50V 100P	1	
C90		ECUM1H103ZFN	C.CAPACITOR CH 50V 0.01U	1	
C91		ECEA1HU010	E.CAPACITOR 50V 1U	1	
C92		ECUM1H103ZFN	C.CAPACITOR CH 50V 0.01U	1	
C93		ECQP1H392JZ	P.CAPACITOR 50V 3900P	1	
C94		ECEA1HU010	E.CAPACITOR 50V 1U	1	
C95		ECUM1H103ZFN	C.CAPACITOR CH 50V 0.01U	1	
C96-99		ECUM1E104ZFN	C.CAPACITOR CH 25V 0.1U	4	
C100,01		ECUM1E104ZFN	C.CAPACITOR CH 25V 0.1U	2	
C105,06		ECUM1H103ZFN	C.CAPACITOR CH 50V 0.01U	2	
C107		ECUM1E104ZFN	C.CAPACITOR CH 25V 0.1U	1	
C108-14		ECUM1H103ZFN	C.CAPACITOR CH 50V 0.01U	7	
C115		ECUM1E104ZFN	C.CAPACITOR CH 25V 0.1U	1	
C116-19		ECUM1H103ZFN	C.CAPACITOR CH 50V 0.01U	4	
C120		ECEA1HU010	E.CAPACITOR 50V 1U	1	
C121-23		ECUM1H103ZFN	C.CAPACITOR CH 50V 0.01U	3	
C124		ECUM1H150JCN	C.CAPACITOR CH 50V 15P	1	
C125		ECUM1H270JCN	C.CAPACITOR CH 50V 27P	1	
C127-38		ECUM1H103ZFN	C.CAPACITOR CH 50V 0.01U	12	
C140		ECUM1H103ZFN	C.CAPACITOR CH 50V 0.01U	1	
C141		ECEA1HU2R2	E.CAPACITOR 50V 2.2U	1	
C142		ECQM1H154JF	P.CAPACITOR 50V 0.15U	1	
C143		ECQM1H104JF	P.CAPACITOR 50V 0.1U	1	
C147,48		ECUM1H103ZFN	C.CAPACITOR CH 50V 0.01U	2	
C151		ECUM1H103ZFN	C.CAPACITOR CH 50V 0.01U	1	
C154		ECUM1H102JCN	C.CAPACITOR CH 50V 1000P	1	
C155		ECKF1H102KB	C.CAPACITOR 50V 1000P	1	
C500-02		ECEA1EU4R7	E.CAPACITOR 25V 4.7U	3	
C503-05		ECEA1HN2R2S	E.CAPACITOR 50V 2.2U	3	
C506-08		ECEA1EU101	E.CAPACITOR 25V 100U	3	

Ref.No.		Part No.	Part Name & Description	Pcs	Remarks
D1		MA151WA	DIODE	1	
D2		MA153	DIODE	1	
D3		MA151K	DIODE	1	
D4,D5		MA151WA	DIODE	2	
D7-D9		MA151K	DIODE	3	
D10-13		MA151K	DIODE	4	
D15		MA151K	DIODE	1	
D16		MA151WK	DIODE	1	
D17		MA151WA	DIODE	1	
D18,19		MA151K	DIODE	2	
D20		MA151WK	DIODE	1	
D500		MA151K	DIODE	1	
D501-06		10E1	DIODE	6	
D507,08		MA151K	DIODE	2	
D509		10E1	DIODE	1	
D510		MA151WK	DIODE	1	
D511		MA3039-H	DIODE	1	
D512		MA3075H	DIODE	1	
D513		MA3051-H	DIODE	1	
D514		MA3056-H	DIODE	1	
D515		MA3100-M	DIODE	1	
IC1		MC14024BF	IC	1	
IC2		MC34051M	IC	1	
IC3		TMPZ84C43AF6	IC	1	
IC4		UPD71054GB	IC	1	
IC5		HD64180ZF8	IC	1	
IC6		TL7705CPSB	IC	1	
IC7		VSI0685B	IC	1	
IC8,C9		MC74HC541F	IC	2	
IC10		MBM221220	IC	1	
IC11		VSI0234	IC	1	
IC13		MC74HC4538F	IC	1	
IC14		MC74HC541F	IC	1	
IC15		MC74HC245AF	IC	1	
IC16,17		MC74HC138AF	IC	2	
IC18		MB89363BPF	IC	1	
IC19,20		MC14094BF	IC	2	
IC21		MB89363BPF	IC	1	
IC24		MC14013BF	IC	1	
IC25,26		MC14027BF	IC	2	
IC27-29		MC14538BF	IC	3	
IC30		MB621176PF	IC	1	
IC31		MB89363BPF	IC	1	
IC34		MC14094BF	IC	1	
IC35		MB89363BPF	IC	1	
IC36-41		MC14021BF	IC	6	
IC42		MB89363BPF	IC	1	
IC43,44		MC14094BF	IC	2	
IC45		MC14021BF	IC	1	
IC46		M50455-001SP	IC	1	
IC47,48		MC14050BF	IC	2	
IC49		SN74LS38NS	IC	1	
IC50,51		MC74HC132F	IC	2	
IC52		MC74HC04AF	IC	1	
IC53,54		MC14049UBF	IC	2	
IC55		MC74HC00AF	IC	1	
IC56		M74F32FP	IC	1	
IC57		MN4030BS	IC	1	
IC58		MC74HC541F	IC	1	
IC59		LM2903M	IC	1	
IC60,61		NJM2901M	IC	2	
IC62		MC74HC00AF	IC	1	
IC63		MC74HC138AF	IC	1	
IC64,65		MC14021BF	IC	2	
IC66,67		MC14094BF	IC	2	
IC68		MB89363BPF	IC	1	
IC69		TC74HC190AF	IC	1	
IC71		MC14538BF	IC	1	
IC72		MC74HC86F	IC	1	

Refer to the P.C.BOARDS LIST, page 6-1-1, before using this page.

Ref.No.		Part No.	Part Name & Description	Pcs	Remarks
IC75		MN4030BS	IC	1	
IC500		PU3124	IC	1	
IC501		PU4124	IC	1	
IC502,03		BA6238AU2M	IC	2	
IC7S		VJS2336A032	CONNECTOR (FEMALE)	1	
IC10S		VJS2336A018	CONNECTOR (FEMALE)	1	
L1		VLP0017	COIL	1	
L2		VLQEL05S150J	COIL 15UH	1	
Q1		2SB710-R	TRANSISTOR	1	(Q,R)
Q2		DTC144EK	TRANSISTOR-RESISTOR	1	
Q3,Q4		DTC114YK	TRANSISTOR-RESISTOR	2	
Q5		UN2214	TRANSISTOR-RESISTOR	1	
Q9		UN2214	TRANSISTOR-RESISTOR	1	
Q15		2SB710-R	TRANSISTOR	1	(Q,R)
Q16		2SD602-R	TRANSISTOR	1	(Q,R)
Q17-22		DTC144EK	TRANSISTOR-RESISTOR	6	
Q25-27		DTC144EK	TRANSISTOR-RESISTOR	3	
Q29-35		DTC144EK	TRANSISTOR-RESISTOR	7	
Q38-42		DTC144EK	TRANSISTOR-RESISTOR	5	
Q44		DTC144EK	TRANSISTOR-RESISTOR	1	
Q46,47		DTC144EK	TRANSISTOR-RESISTOR	2	
Q48		2SD946A	TRANSISTOR	1	
Q500,01		UN2213	TRANSISTOR-RESISTOR	2	
Q502,03		2SB709-R	TRANSISTOR CHIP	2	(Q,R)
Q504		UN2213	TRANSISTOR-RESISTOR	1	
Q505,06		2SB709-R	TRANSISTOR CHIP	2	(Q,R)
Q507		UN2213	TRANSISTOR-RESISTOR	1	
Q508,09		2SB709-R	TRANSISTOR CHIP	2	(Q,R)
Q510-14		UN2213	TRANSISTOR-RESISTOR	5	
Q515		2SB709-R	TRANSISTOR CHIP	1	(Q,R)
			RESISTORS		
R1		ERJ6GEYJ223	M.RESISTOR CH 1/10W 22K	1	
R2		ERJ6GEY0R00	M.RESISTOR CH 1/10W 0	1	
R3		ERJ6GEYJ223	M.RESISTOR CH 1/10W 22K	1	
R4		ERJ6GEY0R00	M.RESISTOR CH 1/10W 0	1	
R5		ERJ6GEYJ562	M.RESISTOR CH 1/10W 5.6K	1	
R6		ERJ6GEYJ103	M.RESISTOR CH 1/10W 10K	1	
R7-R9		ERJ6GEYJ681	M.RESISTOR CH 1/10W 680	3	
R10		ERJ6GEYJ473	M.RESISTOR CH 1/10W 47K	1	
R11		ERJ6GEYJ152	M.RESISTOR CH 1/10W 1.5K	1	
R12		ERJ6GEYJ101	M.RESISTOR CH 1/10W 100	1	
R13,14		ERJ6GEYJ152	M.RESISTOR CH 1/10W 1.5K	2	
R15		ERJ6GEYJ101	M.RESISTOR CH 1/10W 100	1	
R16		ERJ6GEYJ152	M.RESISTOR CH 1/10W 1.5K	1	
R17		ERJ6GEYJ473	M.RESISTOR CH 1/10W 47K	1	
R18		ERJ6GEYJ472	M.RESISTOR CH 1/10W 4.7K	1	
R19-22		ERJ6GEYJ473	M.RESISTOR CH 1/10W 47K	4	
R23-31		ERJ6GEYJ103	M.RESISTOR CH 1/10W 10K	9	
R32		ERJ6GEYJ472	M.RESISTOR CH 1/10W 4.7K	1	
R33		ERJ6GEYJ102	M.RESISTOR CH 1/10W 1K	1	
R34		ERJ6GEYJ103	M.RESISTOR CH 1/10W 10K	1	
R35		ERJ6GEYJ473	M.RESISTOR CH 1/10W 47K	1	
R36		ERJ6GEYJ103	M.RESISTOR CH 1/10W 10K	1	
R37-47		ERJ6GEYJ473	M.RESISTOR CH 1/10W 47K	11	
R48		ERJ6GEYJ474	M.RESISTOR CH 1/10W 470K	1	
R49		ERJ6GEYJ103	M.RESISTOR CH 1/10W 10K	1	
R50		ERJ6GEYJ223	M.RESISTOR CH 1/10W 22K	1	
R51,52		ERJ6GEYJ473	M.RESISTOR CH 1/10W 47K	2	
R53		ERJ6GEYJ223	M.RESISTOR CH 1/10W 22K	1	
R54-72		ERJ6GEYJ103	M.RESISTOR CH 1/10W 10K	19	
R73-77		ERJ6GEYJ473	M.RESISTOR CH 1/10W 47K	5	
R79		ERJ6GEYJ473	M.RESISTOR CH 1/10W 47K	1	
R81-85		ERJ6GEYJ473	M.RESISTOR CH 1/10W 47K	5	
R86,87		ERJ6GEYJ223	M.RESISTOR CH 1/10W 22K	2	
R88		ERJ6GEYJ473	M.RESISTOR CH 1/10W 47K	1	
R93-96		ERJ6GEYJ473	M.RESISTOR CH 1/10W 47K	4	

Ref.No.		Part No.	Part Name & Description	Pcs	Remarks
R97		ERJ6GEYJ101	M.RESISTOR CH 1/10W 100	1	
R100		ERJ6GEYJ101	M.RESISTOR CH 1/10W 100	1	
R101		ERJ6GEYJ473	M.RESISTOR CH 1/10W 47K	1	
R102,03		ERJ6GEYJ101	M.RESISTOR CH 1/10W 100	2	
R104		ERJ6GEYJ223	M.RESISTOR CH 1/10W 22K	1	
R105		ERJ6GEYJ103	M.RESISTOR CH 1/10W 10K	1	
R106		ERJ6GEYJ474	M.RESISTOR CH 1/10W 470K	1	
R107-22		ERJ6GEYJ103	M.RESISTOR CH 1/10W 10K	16	
R123-25		ERJ6GEYJ101	M.RESISTOR CH 1/10W 100	3	
R126,27		ERJ6GEYJ562	M.RESISTOR CH 1/10W 5.6K	2	
R128		ERJ6GEYJ472	M.RESISTOR CH 1/10W 4.7K	1	
R129		ERJ6GEYJ223	M.RESISTOR CH 1/10W 22K	1	
R130-32		ERJ6GEYJ473	M.RESISTOR CH 1/10W 47K	3	
R133,34		ERJ6GEYJ562	M.RESISTOR CH 1/10W 5.6K	2	
R135		ERJ6GEYJ101	M.RESISTOR CH 1/10W 100	1	
R136		ERJ6GEYJ223	M.RESISTOR CH 1/10W 22K	1	
R137-43		ERJ6GEYJ473	M.RESISTOR CH 1/10W 47K	7	
R144		ERJ6GEYJ332	M.RESISTOR CH 1/10W 3.3K	1	
R145		ERJ6GEYJ101	M.RESISTOR CH 1/10W 100	1	
R146		ERJ6GEYJ223	M.RESISTOR CH 1/10W 22K	1	
R147		ERJ6GEYJ332	M.RESISTOR CH 1/10W 3.3K	1	
R148		ERJ6GEYJ101	M.RESISTOR CH 1/10W 100	1	
R149		ERJ6GEYJ102	M.RESISTOR CH 1/10W 1K	1	
R150		ERJ6GEYJ332	M.RESISTOR CH 1/10W 3.3K	1	
R151		ERJ6GEYJ101	M.RESISTOR CH 1/10W 100	1	
R152		ERJ6GEYJ223	M.RESISTOR CH 1/10W 22K	1	
R153		ERJ6GEYJ332	M.RESISTOR CH 1/10W 3.3K	1	
R154		ERJ6GEYJ101	M.RESISTOR CH 1/10W 100	1	
R155		ERJ6GEYJ102	M.RESISTOR CH 1/10W 1K	1	
R156,57		ERJ6GEYJ104	M.RESISTOR CH 1/10W 100K	2	
R158		ERJ6GEYJ332	M.RESISTOR CH 1/10W 3.3K	1	
R159		ERJ6GEYJ103	M.RESISTOR CH 1/10W 10K	1	
R160,61		ERJ6GEYJ102	M.RESISTOR CH 1/10W 1K	2	
R162		ERJ6GEYJ332	M.RESISTOR CH 1/10W 3.3K	1	
R163		ERJ6GEYJ103	M.RESISTOR CH 1/10W 10K	1	
R164		ERJ6GEYJ105	M.RESISTOR CH 1/10W 1M	1	
R165		ERJ6GEYJ223	M.RESISTOR CH 1/10W 22K	1	
R166		ERJ6GEYJ105	M.RESISTOR CH 1/10W 1M	1	
R167		ERJ6GEYJ223	M.RESISTOR CH 1/10W 22K	1	
R168,69		ERJ6GEYJ103	M.RESISTOR CH 1/10W 10K	2	
R170		ERJ6GEYJ104	M.RESISTOR CH 1/10W 100K	1	
R171		VREO034E623	M.RESISTOR CH 1/10W 62K	1	
R172		ERJ6GEYJ104	M.RESISTOR CH 1/10W 100K	1	
R173-83		ERJ6GEYJ103	M.RESISTOR CH 1/10W 10K	11	
R184-86		ERJ6GEYJ473	M.RESISTOR CH 1/10W 47K	3	
R187-91		ERJ6GEYJ103	M.RESISTOR CH 1/10W 10K	5	
R192,93		ERJ6GEYJ101	M.RESISTOR CH 1/10W 100	2	
R194-01		ERJ6GEYJ103	M.RESISTOR CH 1/10W 10K	8	
R202		ERJ6GEYJ473	M.RESISTOR CH 1/10W 47K	1	
R203-06		ERJ6GEYJ103	M.RESISTOR CH 1/10W 10K	4	
R207,08		ERJ6GEYJ223	M.RESISTOR CH 1/10W 22K	2	
R209,10		ERJ6GEYJ122	M.RESISTOR CH 1/10W 1.2K	2	
R211		ERJ6GEYJ101	M.RESISTOR CH 1/10W 100	1	
R212		ERJ6GEYJ474	M.RESISTOR CH 1/10W 470K	1	
R213		ERJ6GEYJ103	M.RESISTOR CH 1/10W 10K	1	
R214		ERJ6GEYJ223	M.RESISTOR CH 1/10W 22K	1	
R215		ERJ6GEYJ473	M.RESISTOR CH 1/10W 47K	1	
R216,17		ERJ6GEYJ223	M.RESISTOR CH 1/10W 22K	2	
R218,19		ERJ6GEYJ101	M.RESISTOR CH 1/10W 100	2	
R220		ERJ6GEYJ223	M.RESISTOR CH 1/10W 22K	1	
R221		ERJ6GEYJ101	M.RESISTOR CH 1/10W 100	1	
R222		ERJ6GEYJ474	M.RESISTOR CH 1/10W 470K	1	
R223		ERJ6GEYJ103	M.RESISTOR CH 1/10W 10K	1	
R224		ERJ6GEYJ223	M.RESISTOR CH 1/10W 22K	1	
R225		ERJ6GEYJ102	M.RESISTOR CH 1/10W 1K	1	
R226		ERJ6GEYJ473	M.RESISTOR CH 1/10W 47K	1	
R227		ERJ6GEYJ103	M.RESISTOR CH 1/10W 10K	1	
R228		ERJ6GEYJ223	M.RESISTOR CH 1/10W 22K	1	
R229		ERJ6GEYJ473	M.RESISTOR CH 1/10W 47K	1	
R230		ERJ6GEYJ103	M.RESISTOR CH 1/10W 10K	1	
R231		ERJ6GEYJ101	M.RESISTOR CH 1/10W 100	1	
R232		ERJ6GEYJ223	M.RESISTOR CH 1/10W 22K	1	
R233,34		ERJ6GEYJ473	M.RESISTOR CH 1/10W 47K	2	
R235		ERJ6GEYJ223	M.RESISTOR CH 1/10W 22K	1	
R236-39		ERJ6GEYJ473	M.RESISTOR CH 1/10W 47K	4	

Refer to the P.C.BOARDS LIST, page 6-1-1, before using this page.

Ref.No.		Part No.	Part Name & Description	Pcs	Remarks
R240		ERJ6GEYJ103	M.RESISTOR CH 1/10W 10K	1	
R241-45		ERJ6GEYJ473	M.RESISTOR CH 1/10W 47K	5	
R247		ERJ6GEYJ103	M.RESISTOR CH 1/10W 10K	1	
R248,49		ERJ6GEYJ102	M.RESISTOR CH 1/10W 1K	2	
R250		ERJ6GEYJ223	M.RESISTOR CH 1/10W 22K	1	
R251		ERJ6GEYJ123	M.RESISTOR CH 1/10W 12K	1	
R252		ERJ6GEYJ103	M.RESISTOR CH 1/10W 10K	1	
R253		ERJ6GEYJ393	M.RESISTOR CH 1/10W 39K	1	
R254		ERJ6GEYJ223	M.RESISTOR CH 1/10W 22K	1	
R255		ERJ6GEYJ562	M.RESISTOR CH 1/10W 5.6K	1	
R256		ERJ6GEYJ223	M.RESISTOR CH 1/10W 22K	1	
R257		ERJ6GEYJ473	M.RESISTOR CH 1/10W 47K	1	
R258		ERJ6GEYJ103	M.RESISTOR CH 1/10W 10K	1	
R259,60		ERJ6GEYJ223	M.RESISTOR CH 1/10W 22K	2	
R261		ERJ6GEYJ183	M.RESISTOR CH 1/10W 18K	1	
R262		ERJ6GEYJ103	M.RESISTOR CH 1/10W 10K	1	
R263		ERJ6GEYJ333	M.RESISTOR CH 1/10W 33K	1	
R264,65		ERJ6GEYJ473	M.RESISTOR CH 1/10W 47K	2	
R266-68		ERJ6GEYJ101	M.RESISTOR CH 1/10W 100	3	
R269		ERJ6GEYJ103	M.RESISTOR CH 1/10W 10K	1	
R270		ERJ6GEYJ101	M.RESISTOR CH 1/10W 100	1	
R272-77		ERJ6GEYJ103	M.RESISTOR CH 1/10W 10K	6	
R278-85		ERJ6GEYJ473	M.RESISTOR CH 1/10W 47K	8	
R286		ERJ6GEYJ103	M.RESISTOR CH 1/10W 10K	1	
R287		ERJ6GEYJ223	M.RESISTOR CH 1/10W 22K	1	
R288,89		ERJ6GEYJ103	M.RESISTOR CH 1/10W 10K	2	
R290		ERJ6GEYJ473	M.RESISTOR CH 1/10W 47K	1	
R291,92		ERJ6GEYJ101	M.RESISTOR CH 1/10W 100	2	
R294		ERJ6GEYJ103	M.RESISTOR CH 1/10W 10K	1	
R295		ERJ6GEYJ564	M.RESISTOR CH 1/10W 560K	1	
R296		ERJ6GEYJ473	M.RESISTOR CH 1/10W 47K	1	
R301		ERJ6GEYJ563	M.RESISTOR CH 1/10W 56K	1	
R302,03		ERJ6GEYJ333	M.RESISTOR CH 1/10W 33K	2	
R304		ERJ6GEYJ473	M.RESISTOR CH 1/10W 47K	1	
R502		ERJ6GEYJ122	M.RESISTOR CH 1/10W 1.2K	1	
R504		ERJ6GEYJ222	M.RESISTOR CH 1/10W 2.2K	1	
R505		ERJ6GEYJ223	M.RESISTOR CH 1/10W 22K	1	
R506		ERJ6GEYJ103	M.RESISTOR CH 1/10W 10K	1	
R507		ERJ6GEYJ102	M.RESISTOR CH 1/10W 1K	1	
R508		ERJ6GEYJ104	M.RESISTOR CH 1/10W 100K	1	
R509		ERJ6GEYJ103	M.RESISTOR CH 1/10W 10K	1	
R510		ERJ6GEYJ223	M.RESISTOR CH 1/10W 22K	1	
R511		ERJ6GEYJ102	M.RESISTOR CH 1/10W 1K	1	
R512		ERJ6GEYJ104	M.RESISTOR CH 1/10W 100K	1	
R513		ERJ6GEYJ222	M.RESISTOR CH 1/10W 2.2K	1	
R514		ERJ6GEYJ223	M.RESISTOR CH 1/10W 22K	1	
R515		ERJ6GEYJ103	M.RESISTOR CH 1/10W 10K	1	
R516		ERJ6GEYJ102	M.RESISTOR CH 1/10W 1K	1	
R517		ERJ6GEYJ104	M.RESISTOR CH 1/10W 100K	1	
R518		ERJ6GEYJ223	M.RESISTOR CH 1/10W 22K	1	
R519		ERJ6GEYJ103	M.RESISTOR CH 1/10W 10K	1	
R520		ERJ6GEYJ102	M.RESISTOR CH 1/10W 1K	1	
R521		ERJ6GEYJ104	M.RESISTOR CH 1/10W 100K	1	
R522		ERJ6GEYJ222	M.RESISTOR CH 1/10W 2.2K	1	
R523		ERJ6GEYJ223	M.RESISTOR CH 1/10W 22K	1	
R524		ERJ6GEYJ103	M.RESISTOR CH 1/10W 10K	1	
R525		ERJ6GEYJ102	M.RESISTOR CH 1/10W 1K	1	
R526		ERJ6GEYJ104	M.RESISTOR CH 1/10W 100K	1	
R527		ERJ6GEYJ223	M.RESISTOR CH 1/10W 22K	1	
R528		ERJ6GEYJ103	M.RESISTOR CH 1/10W 10K	1	
R529		ERJ6GEYJ102	M.RESISTOR CH 1/10W 1K	1	
R530		ERJ6GEYJ104	M.RESISTOR CH 1/10W 100K	1	
R531,32		ERX1SJ1R0	M.RESISTOR 1W 1	2	
R533		ERJ6GEYJ104	M.RESISTOR CH 1/10W 100K	1	
R536		ERJ6GEYJ562	M.RESISTOR CH 1/10W 5.6K	1	
R537		ERJ6GEYJ222	M.RESISTOR CH 1/10W 2.2K	1	
R538		ERJ6GEYJ103	M.RESISTOR CH 1/10W 10K	1	
R539		ERJ6GEYJ223	M.RESISTOR CH 1/10W 22K	1	
R540		ERJ6GEYJ102	M.RESISTOR CH 1/10W 1K	1	
R541		ERJ6GEYJ104	M.RESISTOR CH 1/10W 100K	1	
R542		ERJ6GEYJ272	M.RESISTOR CH 1/10W 2.7K	1	
R543		ERJ6GEYJ271	M.RESISTOR CH 1/10W 270	1	

Ref.No.		Part No.	Part Name & Description	Pcs	Remarks
SW1		VSS0223	SWITCH	1	
SW3		VSR0045	SWITCH	1	
SW4-W6		EVQQEJ06K	SWITCH	3	
SW7		VST0096	SWITCH	1	
TP17-19		VJR0646	TEST POINT	3	
TPG1,G2		VJR0646	TEST POINT	2	
VC1		ECV1ZW20X60	V.CAPACITOR 20P	1	
X1		VSX0373	CRYSTAL OSCILLATOR	1	
			MISCELLANEOUS		
		VML2143	CARD PULLER	1	
		VML2144	CARD PULLER	1	
		VMS4174	PIN	4	
		VMZ1548	BARRIER	1	
		VSC3057	SHIELD CASE	1	
		VSC3058	SHIELD CASE	1	
		VSC3059	SHIELD CASE	1	
		VXA3967	P.C.B. SHIELD PLATE	1	
		XNG26E	NUT	4	
		XNG3ES	NUT	2	
		XSN3+6S	SCREW	2	
		XYNV3+K6FR	SCREW	4	
		XYN26+C10	SCREW	1	

Refer to the P.C.BOARDS LIST, page 6-1-1, before using this page.

Ref.No.		Part No.	Part Name & Description	Pcs	Remarks
	■	VEP86088E	P.C.BOARD W/COMPONENT		FOR AU-65-E,B
			B1 SYSTEM CONTROL		
B1L		VJP2899B096	CONNECTOR(MALE)	1	
B1R		VJP2899B096	CONNECTOR(MALE)	1	
			CAPACITORS		
C1,C2		ECUM1H331JCN	C.CAPACITOR CH 50V 330P	2	
C3-C5		ECUM1H102JCN	C.CAPACITOR CH 50V 1000P	3	
C6-C9		ECUM1H103ZFN	C.CAPACITOR CH 50V 0.01U	4	
C10		ECEA0JU221	E.CAPACITOR 6.3V 220U	1	
C11		ECEA0JU101	E.CAPACITOR 6.3V 100U	1	
C12,13		ECUM1E104ZFN	C.CAPACITOR CH 25V 0.1U	2	
C14,15		ECUM1H270JCN	C.CAPACITOR CH 50V 27P	2	
C16-18		ECUM1H103ZFN	C.CAPACITOR CH 50V 0.01U	3	
C19		ECEA1HU3R3	E.CAPACITOR 50V 3.3U	1	
C20		ECQM1H104JF	P.CAPACITOR 50V 0.1U	1	
C21-23		ECUM1H103ZFN	C.CAPACITOR CH 50V 0.01U	3	
C25		ECEA0JU471	E.CAPACITOR 6.3V 470U	1	
C26,27		ECUM1H680JCN	C.CAPACITOR CH 50V 68P	2	
C28-33		ECUM1H103ZFN	C.CAPACITOR CH 50V 0.01U	6	
C34		ECUM1E104ZFN	C.CAPACITOR CH 25V 0.1U	1	
C35,36		ECUM1H103ZFN	C.CAPACITOR CH 50V 0.01U	2	
C37		ECEA1CU100	E.CAPACITOR 16V 10U	1	
C38-41		ECUM1E104ZFN	C.CAPACITOR CH 25V 0.1U	4	
C42-47		ECUM1H103ZFN	C.CAPACITOR CH 50V 0.01U	6	
C50		ECUM1H103ZFN	C.CAPACITOR CH 50V 0.01U	1	
C51		ECEA1CU100	E.CAPACITOR 16V 10U	1	
C52		ECUM1E104ZFN	C.CAPACITOR CH 25V 0.1U	1	
C53		ECUM1H103ZFN	C.CAPACITOR CH 50V 0.01U	1	
C75-82		ECUM1H103ZFN	C.CAPACITOR CH 50V 0.01U	8	
C83,84		ECEA1HU010	E.CAPACITOR 50V 1U	2	
C85		ECEA1CN100S	E.CAPACITOR 16V 10U	1	
C86		ECUM1H101JCN	C.CAPACITOR CH 50V 100P	1	
C87		ECUM1H103ZFN	C.CAPACITOR CH 50V 0.01U	1	
C88		ECEA1CN100S	E.CAPACITOR 16V 10U	1	
C89		ECUM1H101JCN	C.CAPACITOR CH 50V 100P	1	
C90		ECUM1H103ZFN	C.CAPACITOR CH 50V 0.01U	1	
C91		ECEA1HU010	E.CAPACITOR 50V 1U	1	
C92		ECUM1H103ZFN	C.CAPACITOR CH 50V 0.01U	1	
C93		ECQP1H392JZ	P.CAPACITOR 50V 3900P	1	
C94		ECEA1HU010	E.CAPACITOR 50V 1U	1	
C95		ECUM1H103ZFN	C.CAPACITOR CH 50V 0.01U	1	
C96-99		ECUM1E104ZFN	C.CAPACITOR CH 25V 0.1U	4	
C100,01		ECUM1E104ZFN	C.CAPACITOR CH 25V 0.1U	2	
C105,06		ECUM1H103ZFN	C.CAPACITOR CH 50V 0.01U	2	
C107		ECUM1E104ZFN	C.CAPACITOR CH 25V 0.1U	1	
C108-14		ECUM1H103ZFN	C.CAPACITOR CH 50V 0.01U	7	
C115		ECUM1E104ZFN	C.CAPACITOR CH 25V 0.1U	1	
C116-19		ECUM1H103ZFN	C.CAPACITOR CH 50V 0.01U	4	
C120		ECEA1HU010	E.CAPACITOR 50V 1U	1	
C121-23		ECUM1H103ZFN	C.CAPACITOR CH 50V 0.01U	3	
C124		ECUM1H150JCN	C.CAPACITOR CH 50V 15P	1	
C125		ECUM1H270JCN	C.CAPACITOR CH 50V 27P	1	
C127-38		ECUM1H103ZFN	C.CAPACITOR CH 50V 0.01U	12	
C140		ECUM1H103ZFN	C.CAPACITOR CH 50V 0.01U	1	
C141		ECEA1HU2R2	E.CAPACITOR 50V 2.2U	1	
C142		ECQM1H154JF	P.CAPACITOR 50V 0.15U	1	
C143		ECQM1H104JF	P.CAPACITOR 50V 0.1U	1	
C147,48		ECUM1H103ZFN	C.CAPACITOR CH 50V 0.01U	2	
C151		ECUM1H103ZFN	C.CAPACITOR CH 50V 0.01U	1	
C154		ECUM1H102JCN	C.CAPACITOR CH 50V 1000P	1	
C500-02		ECEA1EU4R7	E.CAPACITOR 25V 4.7U	3	
C503-05		ECEA1HN2R2S	E.CAPACITOR 50V 2.2U	3	
C506-08		ECEA1EU101	E.CAPACITOR 25V 100U	3	

Ref.No.		Part No.	Part Name & Description	Pcs	Remarks
D1		MA151WA	DIODE	1	
D2		MA153	DIODE	1	
D3		MA151K	DIODE	1	
D4,D5		MA151WA	DIODE	2	
D6-D9		MA151K	DIODE	4	
D10-13		MA151K	DIODE	4	
D15		MA151K	DIODE	1	
D16		MA151WK	DIODE	1	
D17		MA151WA	DIODE	1	
D18,19		MA151K	DIODE	2	
D20		MA151WK	DIODE	1	
D500		MA151K	DIODE	1	
D501-06		10E1	DIODE	6	
D507,08		MA151K	DIODE	2	
D509		10E1	DIODE	1	
D510		MA151WK	DIODE	1	
D511		MA3039-H	DIODE	1	
D512		MA3075-H	DIODE	1	
D513		MA3051-H	DIODE	1	
D514		MA3056-H	DIODE	1	
D515		MA3100-M	DIODE	1	
IC1		MC14024BF	IC	1	
IC2		MC34051M	IC	1	
IC3		TMPZ84C43AF6	IC	1	
IC4		UPD71054GB	IC	1	
IC5		HD64180ZF8	IC	1	
IC6		TL7705CPSB	IC	1	
IC7		VSI0737B	IC	1	
IC8,C9		MC74HC541F	IC	2	
IC10		MBM221220	IC	1	
IC11		VSI0234	IC	1	
IC13		MC74HC4538F	IC	1	
IC14		MC74HC541F	IC	1	
IC15		MC74HC245AF	IC	1	
IC16,17		MC74HC138AF	IC	2	
IC18		MB89363BPF	IC	1	
IC19,20		MC14094BF	IC	2	
IC21		MB89363BPF	IC	1	
IC24		MC14013BF	IC	1	
IC25,26		MC14027BF	IC	2	
IC27-29		MC14538BF	IC	3	
IC30		MB621176PF	IC	1	
IC31		MB89363BPF	IC	1	
IC32,33		MC14021BF	IC	2	
IC34		MC14094BF	IC	1	
IC35		MB89363BPF	IC	1	
IC36-41		MC14021BF	IC	6	
IC42		MB89363BPF	IC	1	
IC43,44		MC14094BF	IC	2	
IC45		MC14021BF	IC	1	
IC46		M50455-001SP	IC	1	
IC47,48		MC14050BF	IC	2	
IC49		SN74LS38NS	IC	1	
IC50,51		MC74HC132F	IC	2	
IC52		MC74HC04AF	IC	1	
IC53,54		MC14049UBF	IC	2	
IC55		MC74HC00AF	IC	1	
IC56		M74F32FP	IC	1	
IC57		MN4030BS	IC	1	
IC58		MC74HC541F	IC	1	
IC59		LM2903M	IC	1	
IC60,61		NJM2901M	IC	2	
IC62		MC74HC00AF	IC	1	
IC63		MC74HC138AF	IC	1	
IC64,65		MC14021BF	IC	2	
IC66,67		MC14094BF	IC	2	
IC68		MB89363BPF	IC	1	
IC69		TC74HC190AF	IC	1	
IC71		MC14538BF	IC	1	
IC72		MC74HC86F	IC	1	

Refer to the P.C.BOARDS LIST, page 6-1-1, before using this page.

Ref.No.		Part No.	Part Name & Description	Pcs	Remarks
IC75		MN4030BS	IC	1	
IC500		PU3124	IC	1	
IC501		PU4124	IC	1	
IC502,03		BA6238AU2M	IC	2	
IC7S		VJS2336A032	CONNECTOR (FEMALE)	1	
IC10S		VJS2336A018	CONNECTOR (FEMALE)	1	
L1		VLP0017	COIL	1	
L2		VLQEL05S150J	COIL 15UH	1	
Q1		2SB710	TRANSISTOR	1	(Q,R)
Q2		DTC144EK	TRANSISTOR-RESISTOR	1	
Q3,Q4		DTC114YK	TRANSISTOR-RESISTOR	2	
Q5		UN2214	TRANSISTOR-RESISTOR	1	
Q15		2SB710	TRANSISTOR	1	(Q,R)
Q16		2SD602	TRANSISTOR	1	(Q,R)
Q17-22		DTC144EK	TRANSISTOR-RESISTOR	6	
Q25-47		DTC144EK	TRANSISTOR-RESISTOR	23	
Q48		2SD946A	TRANSISTOR	1	
Q49		DTC144EK	TRANSISTOR-RESISTOR	1	
Q500,01		UN2213	TRANSISTOR-RESISTOR	2	
Q502,03		2SB709	TRANSISTOR CHIP	2	(Q,R)
Q504		UN2213	TRANSISTOR-RESISTOR	1	
Q505,06		2SB709	TRANSISTOR CHIP	2	(Q,R)
Q507		UN2213	TRANSISTOR-RESISTOR	1	
Q508,09		2SB709	TRANSISTOR CHIP	2	(Q,R)
Q510-14		UN2213	TRANSISTOR-RESISTOR	5	
Q515		2SB709	TRANSISTOR CHIP	1	(Q,R)
			RESISTORS		
R1		ERJ6GEYJ223	M.RESISTOR CH 1/10W 22K	1	
R2		ERJ6GEY0R00	M.RESISTOR CH 1/10W 0	1	
R3		ERJ6GEYJ223	M.RESISTOR CH 1/10W 22K	1	
R4		ERJ6GEY0R00	M.RESISTOR CH 1/10W 0	1	
R5		ERJ6GEYJ562	M.RESISTOR CH 1/10W 5.6K	1	
R6		ERJ6GEYJ103	M.RESISTOR CH 1/10W 10K	1	
R7-R9		ERJ6GEYJ681	M.RESISTOR CH 1/10W 680	3	
R10		ERJ6GEYJ473	M.RESISTOR CH 1/10W 47K	1	
R11		ERJ6GEYJ152	M.RESISTOR CH 1/10W 1.5K	1	
R12		ERJ6GEYJ101	M.RESISTOR CH 1/10W 100	1	
R13,14		ERJ6GEYJ152	M.RESISTOR CH 1/10W 1.5K	2	
R15		ERJ6GEYJ101	M.RESISTOR CH 1/10W 100	1	
R16		ERJ6GEYJ152	M.RESISTOR CH 1/10W 1.5K	1	
R17		ERJ6GEYJ473	M.RESISTOR CH 1/10W 47K	1	
R18		ERJ6GEYJ472	M.RESISTOR CH 1/10W 4.7K	1	
R19-22		ERJ6GEYJ473	M.RESISTOR CH 1/10W 47K	4	
R23-31		ERJ6GEYJ103	M.RESISTOR CH 1/10W 10K	9	
R32		ERJ6GEYJ472	M.RESISTOR CH 1/10W 4.7K	1	
R33		ERJ6GEYJ102	M.RESISTOR CH 1/10W 1K	1	
R34		ERJ6GEYJ103	M.RESISTOR CH 1/10W 10K	1	
R35		ERJ6GEYJ473	M.RESISTOR CH 1/10W 47K	1	
R36		ERJ6GEYJ103	M.RESISTOR CH 1/10W 10K	1	
R37-47		ERJ6GEYJ473	M.RESISTOR CH 1/10W 47K	11	
R48		ERJ6GEYJ474	M.RESISTOR CH 1/10W 470K	1	
R49		ERJ6GEYJ103	M.RESISTOR CH 1/10W 10K	1	
R50		ERJ6GEYJ223	M.RESISTOR CH 1/10W 22K	1	
R51,52		ERJ6GEYJ473	M.RESISTOR CH 1/10W 47K	2	
R53		ERJ6GEYJ223	M.RESISTOR CH 1/10W 22K	1	
R54-72		ERJ6GEYJ103	M.RESISTOR CH 1/10W 10K	19	
R73-77		ERJ6GEYJ473	M.RESISTOR CH 1/10W 47K	5	
R79		ERJ6GEYJ473	M.RESISTOR CH 1/10W 47K	1	
R81-85		ERJ6GEYJ473	M.RESISTOR CH 1/10W 47K	5	
R86,87		ERJ6GEYJ223	M.RESISTOR CH 1/10W 22K	2	
R88		ERJ6GEYJ473	M.RESISTOR CH 1/10W 47K	1	
R93-96		ERJ6GEYJ473	M.RESISTOR CH 1/10W 47K	4	
R97		ERJ6GEYJ101	M.RESISTOR CH 1/10W 100	1	
R100		ERJ6GEYJ101	M.RESISTOR CH 1/10W 100	1	
R101		ERJ6GEYJ473	M.RESISTOR CH 1/10W 47K	1	
R102,03		ERJ6GEYJ101	M.RESISTOR CH 1/10W 100	2	

Ref.No.		Part No.	Part Name & Description	Pcs	Remarks
R104		ERJ6GEYJ223	M.RESISTOR CH 1/10W 22K	1	
R105		ERJ6GEYJ103	M.RESISTOR CH 1/10W 10K	1	
R106		ERJ6GEYJ474	M.RESISTOR CH 1/10W 470K	1	
R107-22		ERJ6GEYJ103	M.RESISTOR CH 1/10W 10K	16	
R123-25		ERJ6GEYJ101	M.RESISTOR CH 1/10W 100	3	
R126,27		ERJ6GEYJ562	M.RESISTOR CH 1/10W 5.6K	2	
R128		ERJ6GEYJ472	M.RESISTOR CH 1/10W 4.7K	1	
R129		ERJ6GEYJ223	M.RESISTOR CH 1/10W 22K	1	
R130-32		ERJ6GEYJ473	M.RESISTOR CH 1/10W 47K	3	
R133,34		ERJ6GEYJ562	M.RESISTOR CH 1/10W 5.6K	2	
R136		ERJ6GEYJ223	M.RESISTOR CH 1/10W 22K	1	
R137-43		ERJ6GEYJ473	M.RESISTOR CH 1/10W 47K	7	
R144		ERJ6GEYJ332	M.RESISTOR CH 1/10W 3.3K	1	
R145		ERJ6GEYJ101	M.RESISTOR CH 1/10W 100	1	
R146		ERJ6GEYJ223	M.RESISTOR CH 1/10W 22K	1	
R147		ERJ6GEYJ332	M.RESISTOR CH 1/10W 3.3K	1	
R148		ERJ6GEYJ101	M.RESISTOR CH 1/10W 100	1	
R149		ERJ6GEYJ102	M.RESISTOR CH 1/10W 1K	1	
R150		ERJ6GEYJ332	M.RESISTOR CH 1/10W 3.3K	1	
R151		ERJ6GEYJ101	M.RESISTOR CH 1/10W 100	1	
R152		ERJ6GEYJ223	M.RESISTOR CH 1/10W 22K	1	
R153		ERJ6GEYJ332	M.RESISTOR CH 1/10W 3.3K	1	
R154		ERJ6GEYJ101	M.RESISTOR CH 1/10W 100	1	
R155		ERJ6GEYJ102	M.RESISTOR CH 1/10W 1K	1	
R156,57		ERJ6GEYJ104	M.RESISTOR CH 1/10W 100K	2	
R158		ERJ6GEYJ332	M.RESISTOR CH 1/10W 3.3K	1	
R159		ERJ6GEYJ103	M.RESISTOR CH 1/10W 10K	1	
R160,61		ERJ6GEYJ102	M.RESISTOR CH 1/10W 1K	2	
R162		ERJ6GEYJ332	M.RESISTOR CH 1/10W 3.3K	1	
R163		ERJ6GEYJ103	M.RESISTOR CH 1/10W 10K	1	
R164		ERJ6GEYJ105	M.RESISTOR CH 1/10W 1M	1	
R165		ERJ6GEYJ223	M.RESISTOR CH 1/10W 22K	1	
R166		ERJ6GEYJ105	M.RESISTOR CH 1/10W 1M	1	
R167		ERJ6GEYJ223	M.RESISTOR CH 1/10W 22K	1	
R168,69		ERJ6GEYJ103	M.RESISTOR CH 1/10W 10K	2	
R170		ERJ6GEYJ104	M.RESISTOR CH 1/10W 100K	1	
R171		VRE0034E623	M.RESISTOR CH 1/10W 62K	1	
R172		ERJ6GEYJ104	M.RESISTOR CH 1/10W 100K	1	
R173-83		ERJ6GEYJ103	M.RESISTOR CH 1/10W 10K	11	
R184-86		ERJ6GEYJ473	M.RESISTOR CH 1/10W 47K	3	
R187-91		ERJ6GEYJ103	M.RESISTOR CH 1/10W 10K	5	
R192,93		ERJ6GEYJ101	M.RESISTOR CH 1/10W 100	2	
R194-01		ERJ6GEYJ103	M.RESISTOR CH 1/10W 10K	8	
R202		ERJ6GEYJ473	M.RESISTOR CH 1/10W 47K	1	
R203-06		ERJ6GEYJ103	M.RESISTOR CH 1/10W 10K	4	
R207,08		ERJ6GEYJ223	M.RESISTOR CH 1/10W 22K	2	
R209,10		ERJ6GEYJ122	M.RESISTOR CH 1/10W 1.2K	2	
R211		ERJ6GEYJ101	M.RESISTOR CH 1/10W 100	1	
R212		ERJ6GEYJ474	M.RESISTOR CH 1/10W 470K	1	
R213		ERJ6GEYJ103	M.RESISTOR CH 1/10W 10K	1	
R214		ERJ6GEYJ223	M.RESISTOR CH 1/10W 22K	1	
R215		ERJ6GEYJ473	M.RESISTOR CH 1/10W 47K	1	
R216,17		ERJ6GEYJ223	M.RESISTOR CH 1/10W 22K	2	
R218,19		ERJ6GEYJ101	M.RESISTOR CH 1/10W 100	2	
R220		ERJ6GEYJ223	M.RESISTOR CH 1/10W 22K	1	
R221		ERJ6GEYJ101	M.RESISTOR CH 1/10W 100	1	
R222		ERJ6GEYJ474	M.RESISTOR CH 1/10W 470K	1	
R223		ERJ6GEYJ103	M.RESISTOR CH 1/10W 10K	1	
R224		ERJ6GEYJ223	M.RESISTOR CH 1/10W 22K	1	
R225		ERJ6GEYJ102	M.RESISTOR CH 1/10W 1K	1	
R226		ERJ6GEYJ473	M.RESISTOR CH 1/10W 47K	1	
R227		ERJ6GEYJ103	M.RESISTOR CH 1/10W 10K	1	
R228		ERJ6GEYJ223	M.RESISTOR CH 1/10W 22K	1	
R229		ERJ6GEYJ473	M.RESISTOR CH 1/10W 47K	1	
R230		ERJ6GEYJ103	M.RESISTOR CH 1/10W 10K	1	
R231		ERJ6GEYJ101	M.RESISTOR CH 1/10W 100	1	
R232		ERJ6GEYJ223	M.RESISTOR CH 1/10W 22K	1	
R233,34		ERJ6GEYJ473	M.RESISTOR CH 1/10W 47K	2	
R235		ERJ6GEYJ223	M.RESISTOR CH 1/10W 22K	1	
R236-39		ERJ6GEYJ473	M.RESISTOR CH 1/10W 47K	4	
R240		ERJ6GEYJ103	M.RESISTOR CH 1/10W 10K	1	
R241-45		ERJ6GEYJ473	M.RESISTOR CH 1/10W 47K	5	
R247		ERJ6GEYJ103	M.RESISTOR CH 1/10W 10K	1	
R248,49		ERJ6GEYJ102	M.RESISTOR CH 1/10W 1K	2	
R250		ERJ6GEYJ223	M.RESISTOR CH 1/10W 22K	1	

Refer to the P.C.BOARDS LIST, page 6-1-1, before using this page.

Ref.No.		Part No.	Part Name & Description	Pcs	Remarks
R251		ERJ6GEYJ123	M.RESISTOR CH 1/10W 12K	1	
R252		ERJ6GEYJ103	M.RESISTOR CH 1/10W 10K	1	
R253		ERJ6GEYJ393	M.RESISTOR CH 1/10W 39K	1	
R254		ERJ6GEYJ223	M.RESISTOR CH 1/10W 22K	1	
R255		ERJ6GEYJ562	M.RESISTOR CH 1/10W 5.6K	1	
R256		ERJ6GEYJ223	M.RESISTOR CH 1/10W 22K	1	
R257		ERJ6GEYJ473	M.RESISTOR CH 1/10W 47K	1	
R258		ERJ6GEYJ103	M.RESISTOR CH 1/10W 10K	1	
R259,60		ERJ6GEYJ223	M.RESISTOR CH 1/10W 22K	2	
R261		ERJ6GEYJ183	M.RESISTOR CH 1/10W 18K	1	
R262		ERJ6GEYJ103	M.RESISTOR CH 1/10W 10K	1	
R263		ERJ6GEYJ333	M.RESISTOR CH 1/10W 33K	1	
R264,65		ERJ6GEYJ473	M.RESISTOR CH 1/10W 47K	2	
R266,67		ERJ6GEYJ101	M.RESISTOR CH 1/10W 100	2	
R269		ERJ6GEYJ103	M.RESISTOR CH 1/10W 10K	1	
R270		ERJ6GEYJ101	M.RESISTOR CH 1/10W 100	1	
R272-77		ERJ6GEYJ103	M.RESISTOR CH 1/10W 10K	6	
R278-85		ERJ6GEYJ473	M.RESISTOR CH 1/10W 47K	8	
R286		ERJ6GEYJ103	M.RESISTOR CH 1/10W 10K	1	
R287		ERJ6GEYJ223	M.RESISTOR CH 1/10W 22K	1	
R288,89		ERJ6GEYJ103	M.RESISTOR CH 1/10W 10K	2	
R290		ERJ6GEYJ473	M.RESISTOR CH 1/10W 47K	1	
R294		ERJ6GEYJ103	M.RESISTOR CH 1/10W 10K	1	
R295		ERJ6GEYJ564	M.RESISTOR CH 1/10W 560K	1	
R296		ERJ6GEYJ473	M.RESISTOR CH 1/10W 47K	1	
R301		ERJ6GEYJ563	M.RESISTOR CH 1/10W 56K	1	
R302,03		ERJ6GEYJ333	M.RESISTOR CH 1/10W 33K	2	
R304		ERJ6GEYJ473	M.RESISTOR CH 1/10W 47K	1	
R502		ERJ6GEYJ122	M.RESISTOR CH 1/10W 1.2K	1	
R504		ERJ6GEYJ222	M.RESISTOR CH 1/10W 2.2K	1	
R505		ERJ6GEYJ223	M.RESISTOR CH 1/10W 22K	1	
R506		ERJ6GEYJ103	M.RESISTOR CH 1/10W 10K	1	
R507		ERJ6GEYJ102	M.RESISTOR CH 1/10W 1K	1	
R508		ERJ6GEYJ104	M.RESISTOR CH 1/10W 100K	1	
R509		ERJ6GEYJ103	M.RESISTOR CH 1/10W 10K	1	
R510		ERJ6GEYJ223	M.RESISTOR CH 1/10W 22K	1	
R511		ERJ6GEYJ102	M.RESISTOR CH 1/10W 1K	1	
R512		ERJ6GEYJ104	M.RESISTOR CH 1/10W 100K	1	
R513		ERJ6GEYJ222	M.RESISTOR CH 1/10W 2.2K	1	
R514		ERJ6GEYJ223	M.RESISTOR CH 1/10W 22K	1	
R515		ERJ6GEYJ103	M.RESISTOR CH 1/10W 10K	1	
R516		ERJ6GEYJ102	M.RESISTOR CH 1/10W 1K	1	
R517		ERJ6GEYJ104	M.RESISTOR CH 1/10W 100K	1	
R518		ERJ6GEYJ223	M.RESISTOR CH 1/10W 22K	1	
R519		ERJ6GEYJ103	M.RESISTOR CH 1/10W 10K	1	
R520		ERJ6GEYJ102	M.RESISTOR CH 1/10W 1K	1	
R521		ERJ6GEYJ104	M.RESISTOR CH 1/10W 100K	1	
R522		ERJ6GEYJ222	M.RESISTOR CH 1/10W 2.2K	1	
R523		ERJ6GEYJ223	M.RESISTOR CH 1/10W 22K	1	
R524		ERJ6GEYJ103	M.RESISTOR CH 1/10W 10K	1	
R525		ERJ6GEYJ102	M.RESISTOR CH 1/10W 1K	1	
R526		ERJ6GEYJ104	M.RESISTOR CH 1/10W 100K	1	
R527		ERJ6GEYJ223	M.RESISTOR CH 1/10W 22K	1	
R528		ERJ6GEYJ103	M.RESISTOR CH 1/10W 10K	1	
R529		ERJ6GEYJ102	M.RESISTOR CH 1/10W 1K	1	
R530		ERJ6GEYJ104	M.RESISTOR CH 1/10W 100K	1	
R531,32		ERX1SJ1R0	M.RESISTOR 1W 1.0	2	
R533		ERJ6GEYJ104	M.RESISTOR CH 1/10W 100K	1	
R536		ERJ6GEYJ562	M.RESISTOR CH 1/10W 5.6K	1	
R537		ERJ6GEYJ222	M.RESISTOR CH 1/10W 2.2K	1	
R538		ERJ6GEYJ103	M.RESISTOR CH 1/10W 10K	1	
R539		ERJ6GEYJ223	M.RESISTOR CH 1/10W 22K	1	
R540		ERJ6GEYJ102	M.RESISTOR CH 1/10W 1K	1	
R541		ERJ6GEYJ104	M.RESISTOR CH 1/10W 100K	1	
R542		ERJ6GEYJ272	M.RESISTOR CH 1/10W 2.7K	1	
R543		ERJ6GEYJ271	M.RESISTOR CH 1/10W 270	1	
SW1,W2		VSS0223	SWITCH	2	
SW3		VSR0045	SWITCH	1	
SW4-W6		EVQQEJ06K	SWITCH	3	
SW7		VST0096	SWITCH	1	

Ref.No.		Part No.	Part Name & Description	Pcs	Remarks
TP17-19		VJR0646	TEST POINT	3	
TPG1,G2		VJR0646	TEST POINT	2	
VC1		ECV1ZW20X60	V.CAPACITOR 20P	1	
X1		VSX0373	CRYSTAL OSCILLATOR	1	
			MISCELLANEOUS		
		VML2143	CARD PULLER	1	
		VML2144	CARD PULLER	1	
		VMS4174	PIN	4	
		VMZ1548	BARRIER	1	
		VSC3057	SHIELD CASE	1	
		VSC3058	SHIELD CASE	1	
		VSC3059	SHIELD CASE	1	
		VXA3967	P.C.B. SHIELD PALTE	1	
		XNG26E	NUT	4	
		XNG3ES	NUT	2	
		XSN3+6S	SCREW	2	
		XYNV3+K6FR	SCREW	4	
		XYN26+C10	SCREW	1	

Ref.No.		Part No.	Part Name & Description	Pcs	Remarks
	■	VEP86088F	P.C.BOARD W/COMPONENT		FOR AU-63-E,B
			B1 SYSTEM CONTROL		
B1L		VJP2899B096	CONNECTOR(MALE)	1	
B1R		VJP2899B096	CONNECTOR(MALE)	1	
			CAPACITORS		
C1,C2		ECUM1H331JCN	C.CAPACITOR CH 50V 330P	2	
C3-C5		ECUM1H102JCN	C.CAPACITOR CH 50V 1000P	3	
C6-C9		ECUM1H103ZFN	C.CAPACITOR CH 50V 0.01U	4	
C10		ECEA0JU221	E.CAPACITOR 6.3V 220U	1	
C11		ECEA0JU101	E.CAPACITOR 6.3V 100U	1	
C12,13		ECUM1E104ZFN	C.CAPACITOR CH 25V 0.1U	2	
C14,15		ECUM1H270JCN	C.CAPACITOR CH 50V 27P	2	
C16-18		ECUM1H103ZFN	C.CAPACITOR CH 50V 0.01U	3	
C19		ECEA1HU3R3	E.CAPACITOR 50V 3.3U	1	
C20		ECQM1H104JF	P.CAPACITOR 50V 0.1U	1	
C21-23		ECUM1H103ZFN	C.CAPACITOR CH 50V 0.01U	3	
C25		ECEA0JU471	E.CAPACITOR 6.3V 470U	1	
C26,27		ECUM1H680JCN	C.CAPACITOR CH 50V 68P	2	
C28-33		ECUM1H103ZFN	C.CAPACITOR CH 50V 0.01U	6	
C34		ECUM1E104ZFN	C.CAPACITOR CH 25V 0.1U	1	
C35,36		ECUM1H103ZFN	C.CAPACITOR CH 50V 0.01U	2	
C37		ECEA1CU100	E.CAPACITOR 16V 10U	1	
C38-41		ECUM1E104ZFN	C.CAPACITOR CH 25V 0.1U	4	
C42-47		ECUM1H103ZFN	C.CAPACITOR CH 50V 0.01U	6	
C50		ECUM1H103ZFN	C.CAPACITOR CH 50V 0.01U	1	
C51		ECEA1CU100	E.CAPACITOR 16V 10U	1	
C52		ECUM1E104ZFN	C.CAPACITOR CH 25V 0.1U	1	
C53		ECUM1H103ZFN	C.CAPACITOR CH 50V 0.01U	1	
C75-82		ECUM1H103ZFN	C.CAPACITOR CH 50V 0.01U	8	
C83,84		ECEA1HU010	E.CAPACITOR 50V 1U	2	
C85		ECEA1CN100S	E.CAPACITOR 16V 10U	1	
C86		ECUM1H101JCN	C.CAPACITOR CH 50V 100P	1	
C87		ECUM1H103ZFN	C.CAPACITOR CH 50V 0.01U	1	
C88		ECEA1CN100S	E.CAPACITOR 16V 10U	1	
C89		ECUM1H101JCN	C.CAPACITOR CH 50V 100P	1	
C90		ECUM1H103ZFN	C.CAPACITOR CH 50V 0.01U	1	
C91		ECEA1HU010	E.CAPACITOR 50V 1U	1	
C92		ECUM1H103ZFN	C.CAPACITOR CH 50V 0.01U	1	
C93		ECQP1H392JZ	P.CAPACITOR 50V 3900P	1	
C94		ECEA1HU010	E.CAPACITOR 50V 1U	1	
C95		ECUM1H103ZFN	C.CAPACITOR CH 50V 0.01U	1	
C96-99		ECUM1E104ZFN	C.CAPACITOR CH 25V 0.1U	4	
C100,01		ECUM1E104ZFN	C.CAPACITOR CH 25V 0.1U	2	
C105,06		ECUM1H103ZFN	C.CAPACITOR CH 50V 0.01U	2	
C107		ECUM1E104ZFN	C.CAPACITOR CH 25V 0.1U	1	
C108-14		ECUM1H103ZFN	C.CAPACITOR CH 50V 0.01U	7	
C115		ECUM1E104ZFN	C.CAPACITOR CH 25V 0.1U	1	
C116-19		ECUM1H103ZFN	C.CAPACITOR CH 50V 0.01U	4	
C120		ECEA1HU010	E.CAPACITOR 50V 1U	1	
C121-23		ECUM1H103ZFN	C.CAPACITOR CH 50V 0.01U	3	
C124		ECUM1H150JCN	C.CAPACITOR CH 50V 15P	1	
C125		ECUM1H270JCN	C.CAPACITOR CH 50V 27P	1	
C127-38		ECUM1H103ZFN	C.CAPACITOR CH 50V 0.01U	12	
C140		ECUM1H103ZFN	C.CAPACITOR CH 50V 0.01U	1	
C141		ECEA1HUZR2	E.CAPACITOR 50V 2.2U	1	
C142		ECQM1H154JF	P.CAPACITOR 50V 0.15U	1	
C143		ECQM1H104JF	P.CAPACITOR 50V 0.1U	1	
C147,48		ECUM1H103ZFN	C.CAPACITOR CH 50V 0.01U	2	
C151		ECUM1H103ZFN	C.CAPACITOR CH 50V 0.01U	1	
C154		ECUM1H102JCN	C.CAPACITOR CH 50V 1000P	1	
C500-02		ECEA1EU4R7	E.CAPACITOR 25V 4.7U	3	
C503-05		ECEA1HN2R2S	E.CAPACITOR 50V 2.2U	3	
C506-08		ECEA1EU101	E.CAPACITOR 25V 100U	3	

Ref.No.		Part No.	Part Name & Description	Pcs	Remarks
D1		MA151WA	DIODE	1	
D2		MA153	DIODE	1	
D3		MA151K	DIODE	1	
D4,D5		MA151WA	DIODE	2	
D7-D9		MA151K	DIODE	3	
D10-13		MA151K	DIODE	4	
D15		MA151K	DIODE	1	
D16		MA151WK	DIODE	1	
D17		MA151WA	DIODE	1	
D18,19		MA151K	DIODE	2	
D20		MA151WK	DIODE	1	
D500		MA151K	DIODE	1	
D501-06		10E1	DIODE	6	
D507,08		MA151K	DIODE	2	
D509		10E1	DIODE	1	
D510		MA151WK	DIODE	1	
D511		MA3039-H	DIODE	1	
D512		MA3075-H	DIODE	1	
D513		MA3051-H	DIODE	1	
D514		MA3056-H	DIODE	1	
D515		MA3100-M	DIODE	1	
IC1		MC14024BF	IC	1	
IC2		MC34051M	IC	1	
IC3		TMPZ84C43AF6	IC	1	
IC4		UPD71054GB	IC	1	
IC5		HD64180ZF8	IC	1	
IC6		TL7705CPSB	IC	1	
IC7		VSI0739A	IC	1	
IC8,C9		MC74HC541F	IC	2	
IC10		MBM221220	IC	1	
IC11		VSI0234	IC	1	
IC13		MC74HC4538F	IC	1	
IC14		MC74HC541F	IC	1	
IC15		MC74HC245AF	IC	1	
IC16,17		MC74HC138AF	IC	2	
IC18		MB89363BPF	IC	1	
IC19,20		MC14094BF	IC	2	
IC21		MB89363BPF	IC	1	
IC24		MC14013BF	IC	1	
IC25,26		MC14027BF	IC	2	
IC27-29		MC14538BF	IC	3	
IC30		MB621176PF	IC	1	
IC31		MB89363BPF	IC	1	
IC34		MC14094BF	IC	1	
IC35		MB89363BPF	IC	1	
IC36-41		MC14021BF	IC	6	
IC42		MB89363BPF	IC	1	
IC43,44		MC14094BF	IC	2	
IC45		MC14021BF	IC	1	
IC46		M50455-001SP	IC	1	
IC47,48		MC14050BF	IC	2	
IC49		SN74LS38NS	IC	1	
IC50,51		MC74HC132F	IC	2	
IC52		MC74HC04AF	IC	1	
IC53,54		MC14049UBF	IC	2	
IC55		MC74HC00AF	IC	1	
IC56		M74F32FP	IC	1	
IC57		MN4030BS	IC	1	
IC58		MC74HC541F	IC	1	
IC59		LM2903M	IC	1	
IC60,61		NJM2901M	IC	2	
IC62		MC74HC00AF	IC	1	
IC63		MC74HC138AF	IC	1	
IC64,65		MC14021BF	IC	2	
IC66,67		MC14094BF	IC	2	
IC68		MB89363BPF	IC	1	
IC69		TC74HC190AF	IC	1	
IC71		MC14538BF	IC	1	
IC72		MC74HC86F	IC	1	
IC75		MN4030BS	IC	1	

Refer to the P.C.BOARDS LIST, page 6-1-1, before using this page.

Ref.No.		Part No.	Part Name & Description	Pcs	Remarks
IC500		PU3124	IC	1	
IC501		PU4124	IC	1	
IC502,03		BA6238AU2M	IC	2	
IC7S		VJS2336A032	CONNECTOR (FEMALE)	1	
IC10S		VJS2336A018	CONNECTOR (FEMALE)	1	
L1		VLP0017	COIL	1	
L2		VLQEL05S150J	COIL 15UH	1	
Q1		2SB710	TRANSISTOR	1	(Q,R)
Q2		DTC144EK	TRANSISTOR-RESISTOR	1	
Q3,Q4		DTC114YK	TRANSISTOR-RESISTOR	2	
Q5		UN2214	TRANSISTOR-RESISTOR	1	
Q9		UN2214	TRANSISTOR-RESISTOR	1	
Q15		2SB710	TRANSISTOR	1	(Q,R)
Q16		2SD602	TRANSISTOR	1	(Q,R)
Q17-22		DTC144EK	TRANSISTOR-RESISTOR	6	
Q25-27		DTC144EK	TRANSISTOR-RESISTOR	3	
Q29-35		DTC144EK	TRANSISTOR-RESISTOR	7	
Q38-42		DTC144EK	TRANSISTOR-RESISTOR	5	
Q44		DTC144EK	TRANSISTOR-RESISTOR	1	
Q46,47		DTC144EK	TRANSISTOR-RESISTOR	2	
Q48		2SD946A	TRANSISTOR	1	
Q500,01		UN2213	TRANSISTOR-RESISTOR	2	
Q502,03		2SB709	TRANSISTOR CHIP	2	(Q,R)
Q504		UN2213	TRANSISTOR-RESISTOR	1	
Q505,06		2SB709	TRANSISTOR CHIP	2	(Q,R)
Q507		UN2213	TRANSISTOR-RESISTOR	1	
Q508,09		2SB709	TRANSISTOR CHIP	2	(Q,R)
Q510-14		UN2213	TRANSISTOR-RESISTOR	5	
Q515		2SB709	TRANSISTOR CHIP	1	(Q,R)
			RESISTORS		
R1		ERJ6GEYJ223	M.RESISTOR CH 1/10W 22K	1	
R2		ERJ6GEY0R00	M.RESISTOR CH 1/10W 0	1	
R3		ERJ6GEYJ223	M.RESISTOR CH 1/10W 22K	1	
R4		ERJ6GEY0R00	M.RESISTOR CH 1/10W 0	1	
R5		ERJ6GEYJ562	M.RESISTOR CH 1/10W 5.6K	1	
R6		ERJ6GEYJ103	M.RESISTOR CH 1/10W 10K	1	
R7-R9		ERJ6GEYJ681	M.RESISTOR CH 1/10W 680	3	
R10		ERJ6GEYJ473	M.RESISTOR CH 1/10W 47K	1	
R11		ERJ6GEYJ152	M.RESISTOR CH 1/10W 1.5K	1	
R12		ERJ6GEYJ101	M.RESISTOR CH 1/10W 100	1	
R13,14		ERJ6GEYJ152	M.RESISTOR CH 1/10W 1.5K	2	
R15		ERJ6GEYJ101	M.RESISTOR CH 1/10W 100	1	
R16		ERJ6GEYJ152	M.RESISTOR CH 1/10W 1.5K	1	
R17		ERJ6GEYJ473	M.RESISTOR CH 1/10W 47K	1	
R18		ERJ6GEYJ472	M.RESISTOR CH 1/10W 4.7K	1	
R19-22		ERJ6GEYJ473	M.RESISTOR CH 1/10W 47K	4	
R23-31		ERJ6GEYJ103	M.RESISTOR CH 1/10W 10K	9	
R32		ERJ6GEYJ472	M.RESISTOR CH 1/10W 4.7K	1	
R33		ERJ6GEYJ102	M.RESISTOR CH 1/10W 1K	1	
R34		ERJ6GEYJ103	M.RESISTOR CH 1/10W 10K	1	
R35		ERJ6GEYJ473	M.RESISTOR CH 1/10W 47K	1	
R36		ERJ6GEYJ103	M.RESISTOR CH 1/10W 10K	1	
R37-47		ERJ6GEYJ473	M.RESISTOR CH 1/10W 47K	11	
R48		ERJ6GEYJ474	M.RESISTOR CH 1/10W 470K	1	
R49		ERJ6GEYJ103	M.RESISTOR CH 1/10W 10K	1	
R50		ERJ6GEYJ223	M.RESISTOR CH 1/10W 22K	1	
R51,52		ERJ6GEYJ473	M.RESISTOR CH 1/10W 47K	2	
R53		ERJ6GEYJ223	M.RESISTOR CH 1/10W 22K	1	
R54-72		ERJ6GEYJ103	M.RESISTOR CH 1/10W 10K	19	
R73-77		ERJ6GEYJ473	M.RESISTOR CH 1/10W 47K	5	
R79		ERJ6GEYJ473	M.RESISTOR CH 1/10W 47K	1	
R81-85		ERJ6GEYJ473	M.RESISTOR CH 1/10W 47K	5	
R86,87		ERJ6GEYJ223	M.RESISTOR CH 1/10W 22K	2	
R88		ERJ6GEYJ473	M.RESISTOR CH 1/10W 47K	1	
R93-96		ERJ6GEYJ473	M.RESISTOR CH 1/10W 47K	4	
R97		ERJ6GEYJ101	M.RESISTOR CH 1/10W 100	1	

Ref.No.		Part No.	Part Name & Description	Pcs	Remarks
R100		ERJ6GEYJ101	M.RESISTOR CH 1/10W 100	1	
R101		ERJ6GEYJ473	M.RESISTOR CH 1/10W 47K	1	
R102,03		ERJ6GEYJ101	M.RESISTOR CH 1/10W 100	2	
R104		ERJ6GEYJ223	M.RESISTOR CH 1/10W 22K	1	
R105		ERJ6GEYJ103	M.RESISTOR CH 1/10W 10K	1	
R106		ERJ6GEYJ474	M.RESISTOR CH 1/10W 470K	1	
R107-22		ERJ6GEYJ103	M.RESISTOR CH 1/10W 10K	16	
R123-25		ERJ6GEYJ101	M.RESISTOR CH 1/10W 100	3	
R126,27		ERJ6GEYJ562	M.RESISTOR CH 1/10W 5.6K	2	
R128		ERJ6GEYJ472	M.RESISTOR CH 1/10W 4.7K	1	
R129		ERJ6GEYJ223	M.RESISTOR CH 1/10W 22K	1	
R130-32		ERJ6GEYJ473	M.RESISTOR CH 1/10W 47K	3	
R133,34		ERJ6GEYJ562	M.RESISTOR CH 1/10W 5.6K	2	
R135		ERJ6GEYJ101	M.RESISTOR CH 1/10W 100	1	
R136		ERJ6GEYJ223	M.RESISTOR CH 1/10W 22K	1	
R137-43		ERJ6GEYJ473	M.RESISTOR CH 1/10W 47K	7	
R144		ERJ6GEYJ332	M.RESISTOR CH 1/10W 3.3K	1	
R145		ERJ6GEYJ101	M.RESISTOR CH 1/10W 100	1	
R146		ERJ6GEYJ223	M.RESISTOR CH 1/10W 22K	1	
R147		ERJ6GEYJ332	M.RESISTOR CH 1/10W 3.3K	1	
R148		ERJ6GEYJ101	M.RESISTOR CH 1/10W 100	1	
R149		ERJ6GEYJ102	M.RESISTOR CH 1/10W 1K	1	
R150		ERJ6GEYJ332	M.RESISTOR CH 1/10W 3.3K	1	
R151		ERJ6GEYJ101	M.RESISTOR CH 1/10W 100	1	
R152		ERJ6GEYJ223	M.RESISTOR CH 1/10W 22K	1	
R153		ERJ6GEYJ332	M.RESISTOR CH 1/10W 3.3K	1	
R154		ERJ6GEYJ101	M.RESISTOR CH 1/10W 100	1	
R155		ERJ6GEYJ102	M.RESISTOR CH 1/10W 1K	1	
R156,57		ERJ6GEYJ104	M.RESISTOR CH 1/10W 100K	2	
R158		ERJ6GEYJ332	M.RESISTOR CH 1/10W 3.3K	1	
R159		ERJ6GEYJ103	M.RESISTOR CH 1/10W 10K	1	
R160,61		ERJ6GEYJ102	M.RESISTOR CH 1/10W 1K	2	
R162		ERJ6GEYJ332	M.RESISTOR CH 1/10W 3.3K	1	
R163		ERJ6GEYJ103	M.RESISTOR CH 1/10W 10K	1	
R164		ERJ6GEYJ105	M.RESISTOR CH 1/10W 1M	1	
R165		ERJ6GEYJ223	M.RESISTOR CH 1/10W 22K	1	
R166		ERJ6GEYJ105	M.RESISTOR CH 1/10W 1M	1	
R167		ERJ6GEYJ223	M.RESISTOR CH 1/10W 22K	1	
R168,69		ERJ6GEYJ103	M.RESISTOR CH 1/10W 10K	2	
R170		ERJ6GEYJ104	M.RESISTOR CH 1/10W 100K	1	
R171		VRE0034E623	M.RESISTOR CH 1/10W 62K	1	
R172		ERJ6GEYJ104	M.RESISTOR CH 1/10W 100K	1	
R173-83		ERJ6GEYJ103	M.RESISTOR CH 1/10W 10K	11	
R184-86		ERJ6GEYJ473	M.RESISTOR CH 1/10W 47K	3	
R187-91		ERJ6GEYJ103	M.RESISTOR CH 1/10W 10K	5	
R192,93		ERJ6GEYJ101	M.RESISTOR CH 1/10W 100	2	
R194-01		ERJ6GEYJ103	M.RESISTOR CH 1/10W 10K	8	
R202		ERJ6GEYJ473	M.RESISTOR CH 1/10W 47K	1	
R203-06		ERJ6GEYJ103	M.RESISTOR CH 1/10W 10K	4	
R207,08		ERJ6GEYJ223	M.RESISTOR CH 1/10W 22K	2	
R209,10		ERJ6GEYJ122	M.RESISTOR CH 1/10W 1.2K	2	
R211		ERJ6GEYJ101	M.RESISTOR CH 1/10W 100	1	
R212		ERJ6GEYJ474	M.RESISTOR CH 1/10W 470K	1	
R213		ERJ6GEYJ103	M.RESISTOR CH 1/10W 10K	1	
R214		ERJ6GEYJ223	M.RESISTOR CH 1/10W 22K	1	
R215		ERJ6GEYJ473	M.RESISTOR CH 1/10W 47K	1	
R216,17		ERJ6GEYJ223	M.RESISTOR CH 1/10W 22K	2	
R218,19		ERJ6GEYJ101	M.RESISTOR CH 1/10W 100	2	
R220		ERJ6GEYJ223	M.RESISTOR CH 1/10W 22K	1	
R221		ERJ6GEYJ101	M.RESISTOR CH 1/10W 100	1	
R222		ERJ6GEYJ474	M.RESISTOR CH 1/10W 470K	1	
R223		ERJ6GEYJ103	M.RESISTOR CH 1/10W 10K	1	
R224		ERJ6GEYJ223	M.RESISTOR CH 1/10W 22K	1	
R225		ERJ6GEYJ102	M.RESISTOR CH 1/10W 1K	1	
R226		ERJ6GEYJ473	M.RESISTOR CH 1/10W 47K	1	
R227		ERJ6GEYJ103	M.RESISTOR CH 1/10W 10K	1	
R228		ERJ6GEYJ223	M.RESISTOR CH 1/10W 22K	1	
R229		ERJ6GEYJ473	M.RESISTOR CH 1/10W 47K	1	
R230		ERJ6GEYJ103	M.RESISTOR CH 1/10W 10K	1	
R231		ERJ6GEYJ101	M.RESISTOR CH 1/10W 100	1	
R232		ERJ6GEYJ223	M.RESISTOR CH 1/10W 22K	1	
R233,34		ERJ6GEYJ473	M.RESISTOR CH 1/10W 47K	2	
R235		ERJ6GEYJ223	M.RESISTOR CH 1/10W 22K	1	
R236-39		ERJ6GEYJ473	M.RESISTOR CH 1/10W 47K	4	
R240		ERJ6GEYJ103	M.RESISTOR CH 1/10W 10K	1	

Refer to the P.C.BOARDS LIST, page 6-1-1, before using this page.

Ref.No.		Part No.	Part Name & Description	Pcs	Remarks
R241-45		ERJ6GEYJ473	M.RESISTOR CH 1/10W 47K	5	
R247		ERJ6GEYJ103	M.RESISTOR CH 1/10W 10K	1	
R248,49		ERJ6GEYJ102	M.RESISTOR CH 1/10W 1K	2	
R250		ERJ6GEYJ223	M.RESISTOR CH 1/10W 22K	1	
R251		ERJ6GEYJ123	M.RESISTOR CH 1/10W 12K	1	
R252		ERJ6GEYJ103	M.RESISTOR CH 1/10W 10K	1	
R253		ERJ6GEYJ393	M.RESISTOR CH 1/10W 39K	1	
R254		ERJ6GEYJ223	M.RESISTOR CH 1/10W 22K	1	
R255		ERJ6GEYJ562	M.RESISTOR CH 1/10W 5.6K	1	
R256		ERJ6GEYJ223	M.RESISTOR CH 1/10W 22K	1	
R257		ERJ6GEYJ473	M.RESISTOR CH 1/10W 47K	1	
R258		ERJ6GEYJ103	M.RESISTOR CH 1/10W 10K	1	
R259,60		ERJ6GEYJ223	M.RESISTOR CH 1/10W 22K	2	
R261		ERJ6GEYJ183	M.RESISTOR CH 1/10W 18K	1	
R262		ERJ6GEYJ103	M.RESISTOR CH 1/10W 10K	1	
R263		ERJ6GEYJ333	M.RESISTOR CH 1/10W 33K	1	
R264,65		ERJ6GEYJ473	M.RESISTOR CH 1/10W 47K	2	
R266-68		ERJ6GEYJ101	M.RESISTOR CH 1/10W 100	3	
R269		ERJ6GEYJ103	M.RESISTOR CH 1/10W 10K	1	
R270		ERJ6GEYJ101	M.RESISTOR CH 1/10W 100	1	
R272-77		ERJ6GEYJ103	M.RESISTOR CH 1/10W 10K	6	
R278-85		ERJ6GEYJ473	M.RESISTOR CH 1/10W 47K	8	
R286		ERJ6GEYJ103	M.RESISTOR CH 1/10W 10K	1	
R287		ERJ6GEYJ223	M.RESISTOR CH 1/10W 22K	1	
R288,89		ERJ6GEYJ103	M.RESISTOR CH 1/10W 10K	2	
R290		ERJ6GEYJ473	M.RESISTOR CH 1/10W 47K	1	
R291,92		ERJ6GEYJ101	M.RESISTOR CH 1/10W 100	2	
R294		ERJ6GEYJ103	M.RESISTOR CH 1/10W 10K	1	
R295		ERJ6GEYJ564	M.RESISTOR CH 1/10W 560K	1	
R296		ERJ6GEYJ473	M.RESISTOR CH 1/10W 47K	1	
R301		ERJ6GEYJ563	M.RESISTOR CH 1/10W 56K	1	
R302,03		ERJ6GEYJ333	M.RESISTOR CH 1/10W 33K	2	
R304		ERJ6GEYJ473	M.RESISTOR CH 1/10W 47K	1	
R502		ERJ6GEYJ122	M.RESISTOR CH 1/10W 1.2K	1	
R504		ERJ6GEYJ222	M.RESISTOR CH 1/10W 2.2K	1	
R505		ERJ6GEYJ223	M.RESISTOR CH 1/10W 22K	1	
R506		ERJ6GEYJ103	M.RESISTOR CH 1/10W 10K	1	
R507		ERJ6GEYJ102	M.RESISTOR CH 1/10W 1K	1	
R508		ERJ6GEYJ104	M.RESISTOR CH 1/10W 100K	1	
R509		ERJ6GEYJ103	M.RESISTOR CH 1/10W 10K	1	
R510		ERJ6GEYJ223	M.RESISTOR CH 1/10W 22K	1	
R511		ERJ6GEYJ102	M.RESISTOR CH 1/10W 1K	1	
R512		ERJ6GEYJ104	M.RESISTOR CH 1/10W 100K	1	
R513		ERJ6GEYJ222	M.RESISTOR CH 1/10W 2.2K	1	
R514		ERJ6GEYJ223	M.RESISTOR CH 1/10W 22K	1	
R515		ERJ6GEYJ103	M.RESISTOR CH 1/10W 10K	1	
R516		ERJ6GEYJ102	M.RESISTOR CH 1/10W 1K	1	
R517		ERJ6GEYJ104	M.RESISTOR CH 1/10W 100K	1	
R518		ERJ6GEYJ223	M.RESISTOR CH 1/10W 22K	1	
R519		ERJ6GEYJ103	M.RESISTOR CH 1/10W 10K	1	
R520		ERJ6GEYJ102	M.RESISTOR CH 1/10W 1K	1	
R521		ERJ6GEYJ104	M.RESISTOR CH 1/10W 100K	1	
R522		ERJ6GEYJ222	M.RESISTOR CH 1/10W 2.2K	1	
R523		ERJ6GEYJ223	M.RESISTOR CH 1/10W 22K	1	
R524		ERJ6GEYJ103	M.RESISTOR CH 1/10W 10K	1	
R525		ERJ6GEYJ102	M.RESISTOR CH 1/10W 1K	1	
R526		ERJ6GEYJ104	M.RESISTOR CH 1/10W 100K	1	
R527		ERJ6GEYJ223	M.RESISTOR CH 1/10W 22K	1	
R528		ERJ6GEYJ103	M.RESISTOR CH 1/10W 10K	1	
R529		ERJ6GEYJ102	M.RESISTOR CH 1/10W 1K	1	
R530		ERJ6GEYJ104	M.RESISTOR CH 1/10W 100K	1	
R531,32		ERX1SJ1R0	M.RESISTOR 1W 1	2	
R533		ERJ6GEYJ104	M.RESISTOR CH 1/10W 100K	1	
R536		ERJ6GEYJ562	M.RESISTOR CH 1/10W 5.6K	1	
R537		ERJ6GEYJ222	M.RESISTOR CH 1/10W 2.2K	1	
R538		ERJ6GEYJ103	M.RESISTOR CH 1/10W 10K	1	
R539		ERJ6GEYJ223	M.RESISTOR CH 1/10W 22K	1	
R540		ERJ6GEYJ102	M.RESISTOR CH 1/10W 1K	1	
R541		ERJ6GEYJ104	M.RESISTOR CH 1/10W 100K	1	
R542		ERJ6GEYJ272	M.RESISTOR CH 1/10W 2.7K	1	
R543		ERJ6GEYJ271	M.RESISTOR CH 1/10W 270	1	
SW1		VSS0223	SWITCH	1	

Ref.No.		Part No.	Part Name & Description	Pcs	Remarks
SW3		VSR0045	SWITCH	1	
SW4-W6		EVQQEJ06K	SWITCH	3	
SW7		VST0096	SWITCH	1	
TP17-19		VJR0646	TEST POINT	3	
TPG1,G2		VJR0646	TEST POINT	2	
VC1		ECV1ZW20X60	V.CAPACITOR 20P	1	
X1		VSX0373	CRYSTAL OSCILLATOR	1	
			MISCELLANEOUS		
		VML2143	CARD PULLER	1	
		VML2144	CARD PULLER	1	
		VMS4174	PIN	4	
		VMZ1548	BARRIER	1	
		VSC3057	SHIELD CASE	1	
		VSC3058	SHIELD CASE	1	
		VSC3059	SHIELD CASE	1	
		VXA3967	P.C.B. SHIELD PLATE	1	
		XNG26E	NUT	4	
		XNG3ES	NUT	2	
		XSN3+6S	SCREW	2	
		XYNV3+K6FR	SCREW	4	
		XYN26+C10	SCREW	1	

Refer to the P.C.BOARDS LIST, page 6-1-1, before using this page.

Ref.No.		Part No.	Part Name & Description	Pcs	Remarks
	■	VEP86088M	P.C.BOARD W/COMPONENT		FOR AU-62-E,B
			B1 SYSTEM CONTROL		
B1L		VJP2899B096	CONNECTOR(MALE)	1	
B1R		VJP2899B096	CONNECTOR(MALE)	1	
			CAPACITORS		
C1,C2		ECUM1H331JCN	C.CAPACITOR CH 50V 330P	2	
C3-C5		ECUM1H102JCN	C.CAPACITOR CH 50V 1000P	3	
C6-C9		ECUM1H103ZFN	C.CAPACITOR CH 50V 0.01U	4	
C10		ECEA0JU221	E.CAPACITOR 6.3V 220U	1	
C11		ECEA0JU101	E.CAPACITOR 6.3V 100U	1	
C12,13		ECUM1E104ZFN	C.CAPACITOR CH 25V 0.1U	2	
C14,15		ECUM1H270JCN	C.CAPACITOR CH 50V 27P	2	
C16-18		ECUM1H103ZFN	C.CAPACITOR CH 50V 0.01U	3	
C19		ECEA1HU3R3	E.CAPACITOR 50V 3.3U	1	
C20		ECQM1H104JF	P.CAPACITOR 50V 0.1U	1	
C21-23		ECUM1H103ZFN	C.CAPACITOR CH 50V 0.01U	3	
C25		ECEA0JU471	E.CAPACITOR 6.3V 470U	1	
C26,27		ECUM1H680JCN	C.CAPACITOR CH 50V 68P	2	
C28-33		ECUM1H103ZFN	C.CAPACITOR CH 50V 0.01U	6	
C34		ECUM1E104ZFN	C.CAPACITOR CH 25V 0.1U	1	
C35,36		ECUM1H103ZFN	C.CAPACITOR CH 50V 0.01U	2	
C37		ECEA1CU100	E.CAPACITOR 16V 10U	1	
C38-41		ECUM1E104ZFN	C.CAPACITOR CH 25V 0.1U	4	
C42-47		ECUM1H103ZFN	C.CAPACITOR CH 50V 0.01U	6	
C50		ECUM1H103ZFN	C.CAPACITOR CH 50V 0.01U	1	
C51		ECEA1CU100	E.CAPACITOR 16V 10U	1	
C52		ECUM1E104ZFN	C.CAPACITOR CH 25V 0.1U	1	
C53		ECUM1H103ZFN	C.CAPACITOR CH 50V 0.01U	1	
C75-82		ECUM1H103ZFN	C.CAPACITOR CH 50V 0.01U	8	
C83,84		ECEA1HU010	E.CAPACITOR 50V 1U	2	
C85		ECEA1CN100S	E.CAPACITOR 16V 10U	1	
C86		ECUM1H101JCN	C.CAPACITOR CH 50V 100P	1	
C87		ECUM1H103ZFN	C.CAPACITOR CH 50V 0.01U	1	
C88		ECEA1CN100S	E.CAPACITOR 16V 10U	1	
C89		ECUM1H101JCN	C.CAPACITOR CH 50V 100P	1	
C90		ECUM1H103ZFN	C.CAPACITOR CH 50V 0.01U	1	
C91		ECEA1HU010	E.CAPACITOR 50V 1U	1	
C92		ECUM1H103ZFN	C.CAPACITOR CH 50V 0.01U	1	
C93		ECQP1H392JZ	P.CAPACITOR 50V 3900P	1	
C94		ECEA1HU010	E.CAPACITOR 50V 1U	1	
C95		ECUM1H103ZFN	C.CAPACITOR CH 50V 0.01U	1	
C96-99		ECUM1E104ZFN	C.CAPACITOR CH 25V 0.1U	4	
C100,01		ECUM1E104ZFN	C.CAPACITOR CH 25V 0.1U	2	
C105,06		ECUM1H103ZFN	C.CAPACITOR CH 50V 0.01U	2	
C107		ECUM1E104ZFN	C.CAPACITOR CH 25V 0.1U	1	
C108-14		ECUM1H103ZFN	C.CAPACITOR CH 50V 0.01U	7	
C115		ECUM1E104ZFN	C.CAPACITOR CH 25V 0.1U	1	
C116-19		ECUM1H103ZFN	C.CAPACITOR CH 50V 0.01U	4	
C120		ECEA1HU010	E.CAPACITOR 50V 1U	1	
C121-23		ECUM1H103ZFN	C.CAPACITOR CH 50V 0.01U	3	
C124		ECUM1H150JCN	C.CAPACITOR CH 50V 15P	1	
C125		ECUM1H270JCN	C.CAPACITOR CH 50V 27P	1	
C127-38		ECUM1H103ZFN	C.CAPACITOR CH 50V 0.01U	12	
C140		ECUM1H103ZFN	C.CAPACITOR CH 50V 0.01U	1	
C141		ECEA1HU2R2	E.CAPACITOR 50V 2.2U	1	
C142		ECQM1H154JF	P.CAPACITOR 50V 0.15U	1	
C143		ECQM1H104JF	P.CAPACITOR 50V 0.1U	1	
C147,48		ECUM1H103ZFN	C.CAPACITOR CH 50V 0.01U	2	
C151		ECUM1H103ZFN	C.CAPACITOR CH 50V 0.01U	1	
C154		ECUM1H102JCN	C.CAPACITOR CH 50V 1000P	1	
C500-02		ECEA1EU4R7	E.CAPACITOR 25V 4.7U	3	
C503-05		ECEA1HN2R2S	E.CAPACITOR 50V 2.2U	3	
C506-08		ECEA1EU101	E.CAPACITOR 25V 100U	3	

Ref.No.		Part No.	Part Name & Description	Pcs	Remarks
D1		MA151WA	DIODE	1	
D2		MA153	DIODE	1	
D3		MA151K	DIODE	1	
D4,D5		MA151WA	DIODE	2	
D7-D9		MA151K	DIODE	3	
D10-13		MA151K	DIODE	4	
D15		MA151K	DIODE	1	
D16		MA151WK	DIODE	1	
D17		MA151WA	DIODE	1	
D18,19		MA151K	DIODE	2	
D20		MA151WK	DIODE	1	
D500		MA151K	DIODE	1	
D501-06		10E1	DIODE	6	
D507,08		MA151K	DIODE	2	
D509		10E1	DIODE	1	
D510		MA151WK	DIODE	1	
D511		MA3039-H	DIODE	1	
D512		MA3075-H	DIODE	1	
D513		MA3051-H	DIODE	1	
D514		MA3056-H	DIODE	1	
D515		MA3100-M	DIODE	1	
IC1		MC14024BF	IC	1	
IC2		MC34051M	IC	1	
IC3		TMPZ84C43AF6	IC	1	
IC4		UPD71054GB	IC	1	
IC5		HD6418OZF8	IC	1	
IC6		TL7705CPSB	IC	1	
IC7		VSI0738A	IC	1	
IC8,C9		MC74HC541F	IC	2	
IC10		MBM221220	IC	1	
IC11		VSI0234	IC	1	
IC13		MC74HC4538F	IC	1	
IC14		MC74HC541F	IC	1	
IC15		MC74HC245AF	IC	1	
IC16,17		MC74HC138AF	IC	2	
IC18		MB89363BPF	IC	1	
IC19,20		MC14094BF	IC	2	
IC21		MB89363BPF	IC	1	
IC24		MC14013BF	IC	1	
IC25,26		MC14027BF	IC	2	
IC27-29		MC14538BF	IC	3	
IC30		MB621176PF	IC	1	
IC31		MB89363BPF	IC	1	
IC34		MC14094BF	IC	1	
IC35		MB89363BPF	IC	1	
IC36-41		MC14021BF	IC	6	
IC42		MB89363BPF	IC	1	
IC43,44		MC14094BF	IC	2	
IC45		MC14021BF	IC	1	
IC46		M50455-001SP	IC	1	
IC47,48		MC14050BF	IC	2	
IC49		SN74LS38NS	IC	1	
IC50,51		MC74HC132F	IC	2	
IC52		MC74HC04AF	IC	1	
IC53,54		MC14049UBF	IC	2	
IC55		MC74HC00AF	IC	1	
IC56		M74F32FP	IC	1	
IC57		MN4030BS	IC	1	
IC58		MC74HC541F	IC	1	
IC59		LM2903M	IC	1	
IC60,61		NJM2901M	IC	2	
IC62		MC74HC00AF	IC	1	
IC63		MC74HC138AF	IC	1	
IC64,65		MC14021BF	IC	2	
IC66,67		MC14094BF	IC	2	
IC68		MB89363BPF	IC	1	
IC69		TC74HC190AF	IC	1	
IC71		MC14538BF	IC	1	
IC72		MC74HC86F	IC	1	
IC75		MN4030BS	IC	1	

Refer to the P.C.BOARDS LIST, page 6-1-1, before using this page.

Ref.No.	Part No.	Part Name & Description	Pcs	Remarks
IC500	PU3124	IC	1	
IC501	PU4124	IC	1	
IC502,03	BA6238AU2M	IC	2	
IC7S	VJS2336A032	CONNECTOR (FEMALE)	1	
IC10S	VJS2336A018	CONNECTOR (FEMALE)	1	
L1	VLP0017	COIL	1	
L2	VLQEL05S15QJ	COIL 15UH	1	
Q1	2SB710	TRANSISTOR	1	(Q,R)
Q2	DTC144EK	TRANSISTOR-RESISTOR	1	
Q3,Q4	DTC114YK	TRANSISTOR-RESISTOR	2	
Q5	UN2214	TRANSISTOR-RESISTOR	1	
Q9	UN2214	TRANSISTOR-RESISTOR	1	
Q15	2SB710	TRANSISTOR	1	(Q,R)
Q16	2SD602	TRANSISTOR	1	(Q,R)
Q17-22	DTC144EK	TRANSISTOR-RESISTOR	6	
Q25-27	DTC144EK	TRANSISTOR-RESISTOR	3	
Q29-35	DTC144EK	TRANSISTOR-RESISTOR	7	
Q38-42	DTC144EK	TRANSISTOR-RESISTOR	5	
Q44	DTC144EK	TRANSISTOR-RESISTOR	1	
Q46,47	DTC144EK	TRANSISTOR-RESISTOR	2	
Q48	2SD946A	TRANSISTOR	1	
Q500,01	UN2213	TRANSISTOR-RESISTOR	2	
Q502,03	2SB709	TRANSISTOR CHIP	2	(Q,R)
Q504	UN2213	TRANSISTOR-RESISTOR	1	
Q505,06	2SB709	TRANSISTOR CHIP	2	(Q,R)
Q507	UN2213	TRANSISTOR-RESISTOR	1	
Q508,09	2SB709	TRANSISTOR CHIP	2	(Q,R)
Q510-14	UN2213	TRANSISTOR-RESISTOR	5	
Q515	2SB709	TRANSISTOR CHIP	1	(Q,R)
		RESISTORS		
R1	ERJ6GEYJ223	M.RESISTOR CH 1/10W 22K	1	
R2	ERJ6GEY0R00	M.RESISTOR CH 1/10W 0	1	
R3	ERJ6GEYJ223	M.RESISTOR CH 1/10W 22K	1	
R4	ERJ6GEY0R00	M.RESISTOR CH 1/10W 0	1	
R5	ERJ6GEYJ562	M.RESISTOR CH 1/10W 5.6K	1	
R6	ERJ6GEYJ103	M.RESISTOR CH 1/10W 10K	1	
R7-R9	ERJ6GEYJ681	M.RESISTOR CH 1/10W 680	3	
R10	ERJ6GEYJ473	M.RESISTOR CH 1/10W 47K	1	
R11	ERJ6GEYJ152	M.RESISTOR CH 1/10W 1.5K	1	
R12	ERJ6GEYJ101	M.RESISTOR CH 1/10W 100	1	
R13,14	ERJ6GEYJ152	M.RESISTOR CH 1/10W 1.5K	2	
R15	ERJ6GEYJ101	M.RESISTOR CH 1/10W 100	1	
R16	ERJ6GEYJ152	M.RESISTOR CH 1/10W 1.5K	1	
R17	ERJ6GEYJ473	M.RESISTOR CH 1/10W 47K	1	
R18	ERJ6GEYJ472	M.RESISTOR CH 1/10W 4.7K	1	
R19-22	ERJ6GEYJ473	M.RESISTOR CH 1/10W 47K	4	
R23-31	ERJ6GEYJ103	M.RESISTOR CH 1/10W 10K	9	
R32	ERJ6GEYJ472	M.RESISTOR CH 1/10W 4.7K	1	
R33	ERJ6GEYJ102	M.RESISTOR CH 1/10W 1K	1	
R34	ERJ6GEYJ103	M.RESISTOR CH 1/10W 10K	1	
R35	ERJ6GEYJ473	M.RESISTOR CH 1/10W 47K	1	
R36	ERJ6GEYJ103	M.RESISTOR CH 1/10W 10K	1	
R37-47	ERJ6GEYJ473	M.RESISTOR CH 1/10W 47K	11	
R48	ERJ6GEYJ474	M.RESISTOR CH 1/10W 470K	1	
R49	ERJ6GEYJ103	M.RESISTOR CH 1/10W 10K	1	
R50	ERJ6GEYJ223	M.RESISTOR CH 1/10W 22K	1	
R51,52	ERJ6GEYJ473	M.RESISTOR CH 1/10W 47K	2	
R53	ERJ6GEYJ223	M.RESISTOR CH 1/10W 22K	1	
R54-72	ERJ6GEYJ103	M.RESISTOR CH 1/10W 10K	19	
R73-77	ERJ6GEYJ473	M.RESISTOR CH 1/10W 47K	5	
R79	ERJ6GEYJ473	M.RESISTOR CH 1/10W 47K	1	
R81-85	ERJ6GEYJ473	M.RESISTOR CH 1/10W 47K	5	
R86,87	ERJ6GEYJ223	M.RESISTOR CH 1/10W 22K	2	
R88	ERJ6GEYJ473	M.RESISTOR CH 1/10W 47K	1	
R93-96	ERJ6GEYJ473	M.RESISTOR CH 1/10W 47K	4	
R97	ERJ6GEYJ101	M.RESISTOR CH 1/10W 100	1	

Ref.No.	Part No.	Part Name & Description	Pcs	Remarks
R100	ERJ6GEYJ101	M.RESISTOR CH 1/10W 100	1	
R101	ERJ6GEYJ473	M.RESISTOR CH 1/10W 47K	1	
R102,03	ERJ6GEYJ101	M.RESISTOR CH 1/10W 100	2	
R104	ERJ6GEYJ223	M.RESISTOR CH 1/10W 22K	1	
R105	ERJ6GEYJ103	M.RESISTOR CH 1/10W 10K	1	
R106	ERJ6GEYJ474	M.RESISTOR CH 1/10W 470K	1	
R107-22	ERJ6GEYJ103	M.RESISTOR CH 1/10W 10K	16	
R123-25	ERJ6GEYJ101	M.RESISTOR CH 1/10W 100	3	
R126,27	ERJ6GEYJ562	M.RESISTOR CH 1/10W 5.6K	2	
R128	ERJ6GEYJ472	M.RESISTOR CH 1/10W 4.7K	1	
R129	ERJ6GEYJ223	M.RESISTOR CH 1/10W 22K	1	
R130-32	ERJ6GEYJ473	M.RESISTOR CH 1/10W 47K	3	
R133,34	ERJ6GEYJ562	M.RESISTOR CH 1/10W 5.6K	2	
R135	ERJ6GEYJ101	M.RESISTOR CH 1/10W 100	1	
R136	ERJ6GEYJ223	M.RESISTOR CH 1/10W 22K	1	
R137-43	ERJ6GEYJ473	M.RESISTOR CH 1/10W 47K	7	
R144	ERJ6GEYJ332	M.RESISTOR CH 1/10W 3.3K	1	
R145	ERJ6GEYJ101	M.RESISTOR CH 1/10W 100	1	
R146	ERJ6GEYJ223	M.RESISTOR CH 1/10W 22K	1	
R147	ERJ6GEYJ332	M.RESISTOR CH 1/10W 3.3K	1	
R148	ERJ6GEYJ101	M.RESISTOR CH 1/10W 100	1	
R149	ERJ6GEYJ102	M.RESISTOR CH 1/10W 1K	1	
R150	ERJ6GEYJ332	M.RESISTOR CH 1/10W 3.3K	1	
R151	ERJ6GEYJ101	M.RESISTOR CH 1/10W 100	1	
R152	ERJ6GEYJ223	M.RESISTOR CH 1/10W 22K	1	
R153	ERJ6GEYJ332	M.RESISTOR CH 1/10W 3.3K	1	
R154	ERJ6GEYJ101	M.RESISTOR CH 1/10W 100	1	
R155	ERJ6GEYJ102	M.RESISTOR CH 1/10W 1K	1	
R156,57	ERJ6GEYJ104	M.RESISTOR CH 1/10W 100K	2	
R158	ERJ6GEYJ332	M.RESISTOR CH 1/10W 3.3K	1	
R159	ERJ6GEYJ103	M.RESISTOR CH 1/10W 10K	1	
R160,61	ERJ6GEYJ102	M.RESISTOR CH 1/10W 1K	2	
R162	ERJ6GEYJ332	M.RESISTOR CH 1/10W 3.3K	1	
R163	ERJ6GEYJ103	M.RESISTOR CH 1/10W 10K	1	
R164	ERJ6GEYJ105	M.RESISTOR CH 1/10W 1M	1	
R165	ERJ6GEYJ223	M.RESISTOR CH 1/10W 22K	1	
R166	ERJ6GEYJ105	M.RESISTOR CH 1/10W 1M	1	
R167	ERJ6GEYJ223	M.RESISTOR CH 1/10W 22K	1	
R168,69	ERJ6GEYJ103	M.RESISTOR CH 1/10W 10K	2	
R170	ERJ6GEYJ104	M.RESISTOR CH 1/10W 100K	1	
R171	VRE0034E623	M.RESISTOR CH 1/10W 62K	1	
R172	ERJ6GEYJ104	M.RESISTOR CH 1/10W 100K	1	
R173-83	ERJ6GEYJ103	M.RESISTOR CH 1/10W 10K	11	
R184-86	ERJ6GEYJ473	M.RESISTOR CH 1/10W 47K	3	
R187-91	ERJ6GEYJ103	M.RESISTOR CH 1/10W 10K	5	
R192,93	ERJ6GEYJ101	M.RESISTOR CH 1/10W 100	2	
R194-01	ERJ6GEYJ103	M.RESISTOR CH 1/10W 10K	8	
R202	ERJ6GEYJ473	M.RESISTOR CH 1/10W 47K	1	
R203-06	ERJ6GEYJ103	M.RESISTOR CH 1/10W 10K	4	
R207,08	ERJ6GEYJ223	M.RESISTOR CH 1/10W 22K	2	
R209,10	ERJ6GEYJ122	M.RESISTOR CH 1/10W 1.2K	2	
R211	ERJ6GEYJ101	M.RESISTOR CH 1/10W 100	1	
R212	ERJ6GEYJ474	M.RESISTOR CH 1/10W 470K	1	
R213	ERJ6GEYJ103	M.RESISTOR CH 1/10W 10K	1	
R214	ERJ6GEYJ223	M.RESISTOR CH 1/10W 22K	1	
R215	ERJ6GEYJ473	M.RESISTOR CH 1/10W 47K	1	
R216,17	ERJ6GEYJ223	M.RESISTOR CH 1/10W 22K	2	
R218,19	ERJ6GEYJ101	M.RESISTOR CH 1/10W 100	2	
R220	ERJ6GEYJ223	M.RESISTOR CH 1/10W 22K	1	
R221	ERJ6GEYJ101	M.RESISTOR CH 1/10W 100	1	
R222	ERJ6GEYJ474	M.RESISTOR CH 1/10W 470K	1	
R223	ERJ6GEYJ103	M.RESISTOR CH 1/10W 10K	1	
R224	ERJ6GEYJ223	M.RESISTOR CH 1/10W 22K	1	
R225	ERJ6GEYJ102	M.RESISTOR CH 1/10W 1K	1	
R226	ERJ6GEYJ473	M.RESISTOR CH 1/10W 47K	1	
R227	ERJ6GEYJ103	M.RESISTOR CH 1/10W 10K	1	
R228	ERJ6GEYJ223	M.RESISTOR CH 1/10W 22K	1	
R229	ERJ6GEYJ473	M.RESISTOR CH 1/10W 47K	1	
R230	ERJ6GEYJ103	M.RESISTOR CH 1/10W 10K	1	
R231	ERJ6GEYJ101	M.RESISTOR CH 1/10W 100	1	
R232	ERJ6GEYJ223	M.RESISTOR CH 1/10W 22K	1	
R233,34	ERJ6GEYJ473	M.RESISTOR CH 1/10W 47K	2	
R235	ERJ6GEYJ223	M.RESISTOR CH 1/10W 22K	1	
R236-39	ERJ6GEYJ473	M.RESISTOR CH 1/10W 47K	4	
R240	ERJ6GEYJ103	M.RESISTOR CH 1/10W 10K	1	

Refer to the P.C.BOARDS LIST, page 6-1-1, before using this page.

Ref.No.		Part No.	Part Name & Description	Pcs	Remarks
R241-45		ERJ6GEYJ473	M.RESISTOR CH 1/10W 47K	5	
R247		ERJ6GEYJ103	M.RESISTOR CH 1/10W 10K	1	
R248,49		ERJ6GEYJ102	M.RESISTOR CH 1/10W 1K	2	
R250		ERJ6GEYJ223	M.RESISTOR CH 1/10W 22K	1	
R251		ERJ6GEYJ123	M.RESISTOR CH 1/10W 12K	1	
R252		ERJ6GEYJ103	M.RESISTOR CH 1/10W 10K	1	
R253		ERJ6GEYJ393	M.RESISTOR CH 1/10W 39K	1	
R254		ERJ6GEYJ223	M.RESISTOR CH 1/10W 22K	1	
R255		ERJ6GEYJ562	M.RESISTOR CH 1/10W 5.6K	1	
R256		ERJ6GEYJ223	M.RESISTOR CH 1/10W 22K	1	
R257		ERJ6GEYJ473	M.RESISTOR CH 1/10W 47K	1	
R258		ERJ6GEYJ103	M.RESISTOR CH 1/10W 10K	1	
R259,60		ERJ6GEYJ223	M.RESISTOR CH 1/10W 22K	2	
R261		ERJ6GEYJ183	M.RESISTOR CH 1/10W 18K	1	
R262		ERJ6GEYJ103	M.RESISTOR CH 1/10W 10K	1	
R263		ERJ6GEYJ333	M.RESISTOR CH 1/10W 33K	1	
R264,65		ERJ6GEYJ473	M.RESISTOR CH 1/10W 47K	2	
R266-68		ERJ6GEYJ101	M.RESISTOR CH 1/10W 100	3	
R269		ERJ6GEYJ103	M.RESISTOR CH 1/10W 10K	1	
R270		ERJ6GEYJ101	M.RESISTOR CH 1/10W 100	1	
R272-77		ERJ6GEYJ103	M.RESISTOR CH 1/10W 10K	6	
R278-85		ERJ6GEYJ473	M.RESISTOR CH 1/10W 47K	8	
R286		ERJ6GEYJ103	M.RESISTOR CH 1/10W 10K	1	
R287		ERJ6GEYJ223	M.RESISTOR CH 1/10W 22K	1	
R288,89		ERJ6GEYJ103	M.RESISTOR CH 1/10W 10K	2	
R290		ERJ6GEYJ473	M.RESISTOR CH 1/10W 47K	1	
R291,92		ERJ6GEYJ101	M.RESISTOR CH 1/10W 100	2	
R294		ERJ6GEYJ103	M.RESISTOR CH 1/10W 10K	1	
R295		ERJ6GEYJ564	M.RESISTOR CH 1/10W 560K	1	
R296		ERJ6GEYJ473	M.RESISTOR CH 1/10W 47K	1	
R301		ERJ6GEYJ563	M.RESISTOR CH 1/10W 56K	1	
R302,03		ERJ6GEYJ333	M.RESISTOR CH 1/10W 33K	2	
R304		ERJ6GEYJ473	M.RESISTOR CH 1/10W 47K	1	
R502		ERJ6GEYJ122	M.RESISTOR CH 1/10W 1.2K	1	
R504		ERJ6GEYJ222	M.RESISTOR CH 1/10W 2.2K	1	
R505		ERJ6GEYJ223	M.RESISTOR CH 1/10W 22K	1	
R506		ERJ6GEYJ103	M.RESISTOR CH 1/10W 10K	1	
R507		ERJ6GEYJ102	M.RESISTOR CH 1/10W 1K	1	
R508		ERJ6GEYJ104	M.RESISTOR CH 1/10W 100K	1	
R509		ERJ6GEYJ103	M.RESISTOR CH 1/10W 10K	1	
R510		ERJ6GEYJ223	M.RESISTOR CH 1/10W 22K	1	
R511		ERJ6GEYJ102	M.RESISTOR CH 1/10W 1K	1	
R512		ERJ6GEYJ104	M.RESISTOR CH 1/10W 100K	1	
R513		ERJ6GEYJ222	M.RESISTOR CH 1/10W 2.2K	1	
R514		ERJ6GEYJ223	M.RESISTOR CH 1/10W 22K	1	
R515		ERJ6GEYJ103	M.RESISTOR CH 1/10W 10K	1	
R516		ERJ6GEYJ102	M.RESISTOR CH 1/10W 1K	1	
R517		ERJ6GEYJ104	M.RESISTOR CH 1/10W 100K	1	
R518		ERJ6GEYJ223	M.RESISTOR CH 1/10W 22K	1	
R519		ERJ6GEYJ103	M.RESISTOR CH 1/10W 10K	1	
R520		ERJ6GEYJ102	M.RESISTOR CH 1/10W 1K	1	
R521		ERJ6GEYJ104	M.RESISTOR CH 1/10W 100K	1	
R522		ERJ6GEYJ222	M.RESISTOR CH 1/10W 2.2K	1	
R523		ERJ6GEYJ223	M.RESISTOR CH 1/10W 22K	1	
R524		ERJ6GEYJ103	M.RESISTOR CH 1/10W 10K	1	
R525		ERJ6GEYJ102	M.RESISTOR CH 1/10W 1K	1	
R526		ERJ6GEYJ104	M.RESISTOR CH 1/10W 100K	1	
R527		ERJ6GEYJ223	M.RESISTOR CH 1/10W 22K	1	
R528		ERJ6GEYJ103	M.RESISTOR CH 1/10W 10K	1	
R529		ERJ6GEYJ102	M.RESISTOR CH 1/10W 1K	1	
R530		ERJ6GEYJ104	M.RESISTOR CH 1/10W 100K	1	
R531,32		ERX1SJ1R0	M.RESISTOR 1W 1	2	
R533		ERJ6GEYJ104	M.RESISTOR CH 1/10W 100K	1	
R536		ERJ6GEYJ562	M.RESISTOR CH 1/10W 5.6K	1	
R537		ERJ6GEYJ222	M.RESISTOR CH 1/10W 2.2K	1	
R538		ERJ6GEYJ103	M.RESISTOR CH 1/10W 10K	1	
R539		ERJ6GEYJ223	M.RESISTOR CH 1/10W 22K	1	
R540		ERJ6GEYJ102	M.RESISTOR CH 1/10W 1K	1	
R541		ERJ6GEYJ104	M.RESISTOR CH 1/10W 100K	1	
R542		ERJ6GEYJ272	M.RESISTOR CH 1/10W 2.7K	1	
R543		ERJ6GEYJ271	M.RESISTOR CH 1/10W 270	1	
SW1		VSS0223	SWITCH	1	

Ref.No.		Part No.	Part Name & Description	Pcs	Remarks
SW3		VSR0045	SWITCH	1	
SW4-W6		EVQQEJ06K	SWITCH	3	
SW7		VST0096	SWITCH	1	
TP17-19		VJR0646	TEST POINT	3	
TPG1,G2		VJR0646	TEST POINT	2	
VC1		ECV1ZW20X60	V.CAPACITOR 20P	1	
X1		VSX0373	CRYSTAL OSCILLATOR	1	
			MISCELLANEOUS		
		VML2143	CARD PULLER	1	
		VML2144	CARD PULLER	1	
		VMS4174	PIN	4	
		VMZ1548	BARRIER	1	
		VSC3057	SHIELD CASE	1	
		VSC3058	SHIELD CASE	1	
		VSC3059	SHIELD CASE	1	
		VXA3967	P.C.B. SHIELD PLATE	1	
		XNG26E	NUT	4	
		XNG3ES	NUT	2	
		XSN3+6S	SCREW	2	
		XYNV3+K6FR	SCREW	4	
		XYN26+C10	SCREW	1	

Refer to the P.C.BOARDS LIST, page 6-1-1, before using this page.

Ref.No.		Part No.	Part Name & Description	Pcs	Remarks
	■	VEP82062A	P.C.BOARD W/COMPONENT		FOR AU-63-P,E,B
			AT POWER		
			CAPACITORS		
C1		ECEA1VU330	E.CAPACITOR 35V 33U	1	
C2		ECEA1EU221	E.CAPACITOR 25V 220U	1	
C3		ECEA1VU330	E.CAPACITOR 35V 33U	1	
C4		ECUM1H103ZFN	C.CAPACITOR CH 50V 0.01U	1	
C5		ECUM1H103KBN	C.CAPACITOR CH 50V 0.01U	1	
C6		ECUM1H102KBN	C.CAPACITOR CH 50V 1000P	1	
C7		ECUM1H103KBN	C.CAPACITOR CH 50V 0.01U	1	
C8,C9		ECWH10H103JR	C.CAPACITOR 50V 0.01U	2	
C10,11		ECWH10H103JR	C.CAPACITOR 50V 0.01U	2	
C12-19		ECQM1H183JF	P.CAPACITOR 50V 0.018U	8	
C20,21		ECCD2H331J	C.CAPACITOR 500V 330P	2	
C22-27		ECEA1VU330	E.CAPACITOR 35V 33U	6	
C28		ECEA1EU331	E.CAPACITOR 25V 330U	1	
C29		ECEA1CU100	E.CAPACITOR 16V 10U	1	
C30-33		ECUM1H103KBN	C.CAPACITOR CH 50V 0.01U	4	
CN350		VJP1511T	CONNECTOR(MALE)	1	
D1,D2		10E1	DIODE	2	
D3		MA151K	DIODE	1	
D4,D5		RP1H	DIODE	2	
D6,D7		ERZC07DK361B	SURGE ABSORBER 360V	2	
IC1		UPC494G	IC	1	
IC2,C3		UPC4558G	IC	2	
IC4,C5		VCR0111	IC	2	
L1		VLQ0128	COIL 47UH	1	
L2-L5		VLQEL05F101K	COIL 100UH	4	
P1		VJP1143	CONNECTOR(MALE)	1	
Q1		UN2213	TRANSISTOR-RESISTOR	1	
Q2		UN2113	TRANSISTOR-RESISTOR	1	
Q3		2SB709	TRANSISTOR CHIP	1	
Q4,Q5		2SK742	TRANSISTOR	2	
			RESISTORS		
R1		ERO50CHD1004	M.RESISTOR 1/2W 1M	1	
R2		ERJ6GEYG223	M.RESISTOR CH 1/10W 22K	1	
R3		ERJ6GEYJ103	M.RESISTOR CH 1/10W 10K	1	
R4		ERJ6GEYJ104	M.RESISTOR CH 1/10W 100K	1	
R5		ERJ6GEYJ103	M.RESISTOR CH 1/10W 10K	1	
R6		ERJ6GEYG682	M.REISITOR CH 1/10W 6.8K	1	
R7		ERJ6GEYG332	M.RESISTOR CH 1/10W 3.3K	1	
R8		ERJ6GEYG223	M.RESISTOR CH 1/10W 22K	1	
R9		ERJ6GEYJ222	M.RESISTOR CH 1/10W 2.2K	1	
R10		ERJ6GEYG103	M.RESISTOR CH 1/10W 10K	1	
R11		ERJ6GEYG202	M.RESISTOR CH 1/10W 2K	1	
R12,13		ERJ6GEYJ101	M.RESISTOR CH 1/10W 100	2	

Ref.No.		Part No.	Part Name & Description	Pcs	Remarks
R14,15		ERQ12AJ2R2P	F.RESISTOR 1/2W 2.2	2	
R16		ERJ6GEYG622	M.RESISTOR CH 1/10W 6.2K	1	
R17		ERJ6GEYG332	M.RESISTOR CH 1/10W 3.3K	1	
R18-21		ERO25CHD5103	M.RESISTOR 1/4W 510K	4	
R22		ERJ6GEYG123	M.RESISTOR CH 1/10W 12K	1	
R23,24		ERD25TJ474	C.RESISTOR 1/4W 470K	2	
R25		ERSB27G222	THERMISTOR 2.2K	1	
R26		ERJ6GEYG621	M.RESISTOR CH 1/10W 620	1	
R27		ERJ6GEYG272	M.RESISTOR CH 1/10W 2.7K	1	
R28-31		ERJ6GEYG133	M.RESISTOR CH 1/10W 13K	4	
R32		ERSB27G222	THERMISTOR 2.2K	1	
R33		ERJ6GEYG621	M.RESISTOR CH 1/10W 620	1	
R34		ERJ6GEYG272	M.RESISTOR CH 1/10W 2.7K	1	
R35-38		ERJ6GEYG133	M.RESISTOR CH 1/10W 13K	4	
R39		ERJ6GEYG153	M.RESISTOR CH 1/10W 15K	1	
R40		ERJ6GEYJ153	M.RESISTOR CH 1/10W 15K	1	
R41		ERO25CKF8253	M.RESISTOR 1/4W 825K	1	
R42		ERO25CKF6813	M.RESISTOR 1/4W 681K	1	
R43		ERJ6GEYJ473	M.RESISTOR CH 1/10W 47K	1	
R44		ERDS2TJ103	C.RESISTOR 1/4W 10K	1	
R45		ERJ6GEYG153	M.RESISTOR CH 1/10W 15K	1	
R46		ERJ6GEYJ153	M.RESISTOR CH 1/10W 15K	1	
R47		ERO25CKF8253	M.RESISTOR 1/4W 825K	1	
R48		ERO25CKF6813	M.RESISTOR 1/4W 681K	1	
R49		ERJ6GEYJ473	M.RESISTOR CH 1/10W 47K	1	
R50		ERDS2TJ103	C.RESISTOR 1/4W 10K	1	
R51		ERJ6GEYG682	M.REISITOR CH 1/10W 6.8K	1	
T1		VLT0537	TRANSFORMER	1	
TP1-P9		VJR0646	TEST POINT	9	
TP10		VJR0646	TEST POINT	1	
TPG1		VJR0646	TEST POINT	1	
VR1		VRV0109B504	V.RESISTOR 500K	1	
VR2,R3		VRV0109B503	V.RESISTOR 50K	2	
			MISCELLANEOUS		
		VMP2738	P.C.B. HOLDER ANGLE	1	
		VSC2298	SHIELD CASE	1	
		VSC2299	SHIELD COVER	1	
		VSC3407	SHIELD BOARD	1	
		XTV3+6F	SCREW	2	
	■	VEP84094A	P.C.BOARD W/COMPONENT		FOR AU-65-P,E,B
			AUDIO IN/OUT		
	■	VEP80573A	P.C.BOARD W/COMPONENT		ON VEP84094A
			AUDIO IN/ONT SUB		
			CAPACITORS		
C1		ECUM1H470JCN	C.CAPACITOR CH 50V 47P	1	
C2		ECUM1H473ZFN	C.CAPACITOR CH 50V 0.047U	1	
C5		ECUM1H470JCN	C.CAPACITOR CH 50V 47P	1	
C6		ECUM1H473ZFN	C.CAPACITOR CH 50V 0.047U	1	
C101		ECUM1H102JCN	C.CAPACITOR CH 50V 1000P	1	
C102,03		ECEA1CBZ100	E.CAPACITOR 16V 10U	2	
C104,05		ECUM1H330JCN	C.CAPACITOR CH 50V 33P	2	
C106		ECEA1CBZ470	E.CAPACITOR 16V 47U	1	
C107		ECEA1CPZ101	E.CAPACITOR 16V 100U	1	

Refer to the P.C.BOARDS LIST, page 6-1-1, before using this page.

Ref.No.	Part No.	Part Name & Description	Pcs	Remarks
C108,09	ECEA1CPZ301	E.CAPACITOR 16V 300U	2	
C115-18	ECEA1CPZ100	E.CAPACITOR 16V 10U	4	
C119	ECUM1H330JCN	C.CAPACITOR CH 50V 33P	1	
C201	ECUM1H102JCN	C.CAPACITOR CH 50V 1000P	1	
C202,03	ECEA1CBZ100	E.CAPACITOR 16V 10U	2	
C204,05	ECUM1H330JCN	C.CAPACITOR CH 50V 33P	2	
C206	ECEA1CBZ470	E.CAPACITOR 16V 47U	1	
C207	ECEA1CPZ101	E.CAPACITOR 16V 100U	1	
C208,09	ECEA1CPZ301	E.CAPACITOR 16V 300U	2	
C215-18	ECEA1CPZ100	E.CAPACITOR 16V 10U	4	
C219	ECUM1H330JCN	C.CAPACITOR CH 50V 33P	1	
C307	ECEA1CPZ101	E.CAPACITOR 16V 100U	1	
C308,09	ECEA1CPZ301	E.CAPACITOR 16V 300U	2	
C315-18	ECEA1CPZ100	E.CAPACITOR 16V 10U	4	
C407	ECEA1CPZ101	E.CAPACITOR 16V 100U	1	
C408,09	ECEA1CPZ301	E.CAPACITOR 16V 300U	2	
C415-18	ECEA1CPZ100	E.CAPACITOR 16V 10U	4	
C707	ECEA1CPZ101	E.CAPACITOR 16V 100U	1	
C708,09	ECEA1CPZ301	E.CAPACITOR 16V 300U	2	
C710	ECEA1CBZ100	E.CAPACITOR 16V 10U	1	
C714	ECEA1CBZ100	E.CAPACITOR 16V 10U	1	
C715-18	ECEA1CPZ100	E.CAPACITOR 16V 10U	4	
C801,02	ECEA1EN4R7S	E.CAPACITOR 25V 4.7U	2	
C804,05	ECEA1CPZ101	E.CAPACITOR 16V 100U	2	
C806	ECUM1E104ZFN	C.CAPACITOR CH 25V 0.1U	1	
C807,08	ECEA1CPZ101	E.CAPACITOR 16V 100U	2	
C809	ECUM1E104ZFN	C.CAPACITOR CH 25V 0.1U	1	
C810,11	ECEA1CPZ101	E.CAPACITOR 16V 100U	2	
C812	ECUM1H473ZFN	C.CAPACITOR CH 50V 0.047U	1	
C813,14	ECEA1CPZ101	E.CAPACITOR 16V 100U	2	
C815	ECUM1H473ZFN	C.CAPACITOR CH 50V 0.047U	1	
C816	ECEA1CU101	E.CAPACITOR 16V 100U	1	
C817,18	ECEA1CN330S	E.CAPACITOR 16V 33U	2	
C819	ECEA1VU470	E.CAPACITOR 35V 47U	1	
C820	ECEA1HU3R3	E.CAPACITOR 50V 3.3U	1	
C821	ECEA1VU470	E.CAPACITOR 35V 47U	1	
C822	ECEA1HU3R3	E.CAPACITOR 50V 3.3U	1	
C823	ECEA1CU101	E.CAPACITOR 16V 100U	1	
CN200	VJP1237R	CONNECTOR(MALE) 10P	1	
CN201	VJP1231T	CONNECTOR(MALE) 4P	1	
CN202	VJP1230T	CONNECTOR(MALE) 3P	1	
CN203	VJP1511T	CONNECTOR(MALE)	1	
CN204	VJP1235T	CONNECTOR(MALE) 8P	1	
CN205,06	VJP1230T	CONNECTOR(MALE) 3P	2	
CN207	VJP1239T	CONNECTOR(MALE) 12P	1	
CN208	VJP1230G	CONNECTOR(MALE)	1	
CN211,12	VJP1230R	CONNECTOR(MALE) 3P	2	
CN213	VJP1233T	CONNECTOR(MALE) 6P	1	
CN215	VJP1230B	CONNECTOR(MALE)	1	
D1,D2	MA153	DIODE	2	
D101-04	MA3075M	DIODE	4	
D105	HZ2ALL	DIODE	1	
D106	MA153	DIODE	1	
D107,08	HZ2ALL	DIODE	2	
D109	MA153	DIODE	1	
D110	HZ2ALL	DIODE	1	
D201-04	MA3075M	DIODE	4	
D205	HZ2ALL	DIODE	1	
D206	MA153	DIODE	1	
D207,08	HZ2ALL	DIODE	2	
D209	MA153	DIODE	1	
D210	HZ2ALL	DIODE	1	
D305	HZ2ALL	DIODE	1	
D306	MA153	DIODE	1	
D307,08	HZ2ALL	DIODE	2	
D309	MA153	DIODE	1	
D310	HZ2ALL	DIODE	1	
D405	HZ2ALL	DIODE	1	
D406	MA153	DIODE	1	

Ref.No.	Part No.	Part Name & Description	Pcs	Remarks
D407,08	HZ2ALL	DIODE	2	
D409	MA153	DIODE	1	
D410	HZ2ALL	DIODE	1	
D705	HZ2ALL	DIODE	1	
D706	MA153	DIODE	1	
D707,08	HZ2ALL	DIODE	2	
D709	MA153	DIODE	1	
D710	HZ2ALL	DIODE	1	
D801	MA153	DIODE	1	
D802,03	MA151K	DIODE	2	
IC1	RC4556MB	IC	1	
IC101,02	RC2068MD	IC	2	
IC103	NJM4558M	IC	1	
IC105	VEP80573A	P.C.BOARD W/COMPONENT	1	AUDIO IN/OUT SUB
IC201	RC2068MD	IC	1	
IC205	VEP80573A	P.C.BOARD W/COMPONENT	1	AUDIO IN/OUT SUB
IC303	NJM4558M	IC	1	
IC305	VEP80573A	P.C.BOARD W/COMPONENT	1	AUDIO IN/OUT SUB
IC405	VEP80573A	P.C.BOARD W/COMPONENT	1	AUDIO IN/OUT SUB
IC703,04	NJM4558M	IC	2	
IC705	VEP80573A	P.C.BOARD W/COMPONENT	1	AUDIO IN/OUT SUB
IC802	NJM4558M	IC	1	
IC803	AN78N09	IC	1	
IC804	AN79N09	IC	1	
IC805	UPD4053BG	IC	1	
IC806	UPD4052BG	IC	1	
IC808	RC4560MD	IC	1	
P1	VJR0312	CONNECTOR (MALE)	1	
Q1-Q4	2SD1328	TRANSISTOR CHIP	4	(Q,R)
Q101	2SC1847	TRANSISTOR	1	(R)
Q102	2SA886V-R	TRANSISTOR	1	(R)
Q103	2SC1847	TRANSISTOR	1	(R)
Q104	2SA886V-R	TRANSISTOR	1	(R)
Q201	2SC1847	TRANSISTOR	1	(R)
Q202	2SA886V-R	TRANSISTOR	1	(R)
Q203	2SC1847	TRANSISTOR	1	(R)
Q204	2SA886V-R	TRANSISTOR	1	(R)
Q301	2SC1847	TRANSISTOR	1	(R)
Q302	2SA886V-R	TRANSISTOR	1	(R)
Q303	2SC1847	TRANSISTOR	1	(R)
Q304	2SA886V-R	TRANSISTOR	1	(R)

Refer to the P.C.BOARDS LIST, page 6-1-1, before using this page.

Ref.No.		Part No.	Part Name & Description	Pcs	Remarks
Q401		2SC1847	TRANSISTOR	1	(R)
Q402		2SA886V-R	TRANSISTOR	1	(R)
Q403		2SC1847	TRANSISTOR	1	(R)
Q404		2SA886V-R	TRANSISTOR	1	(R)
Q701		2SC1847	TRANSISTOR	1	(R)
Q702		2SA886V-R	TRANSISTOR	1	(R)
Q703		2SC1847	TRANSISTOR	1	(R)
Q704		2SA886V-R	TRANSISTOR	1	(R)
Q801		2SD602	TRANSISTOR	1	(Q,R)
Q802		2SB710	TRANSISTOR	1	(Q,R)
Q803,04		UN2213	TRANSISTOR-RESISTOR	2	
Q805		UN2114	TRANSISTOR-RESISTOR	1	
Q806		UN2213	TRANSISTOR-RESISTOR	1	
Q807		UN2114	TRANSISTOR-RESISTOR	1	
			RESISTORS		
R1-R3		VREO034E472	M.RESISTOR CH 1/10W 4.7K	3	
R4		ERJ6GEYJ105	M.RESISTOR CH 1/10W 1M	1	
R5		VREO034E153	M.RESISTOR CH 1/10W 15K	1	
R6		ERJ6GEYJ221	M.RESISTOR CH 1/10W 220	1	
R7,R8		ERJ6GEYJ103	M.RESISTOR CH 1/10W 10K	2	
R9		ERJ6GEYJ473	M.RESISTOR CH 1/10W 47K	1	
R10		ERJ6GEYJ473	M.RESISTOR CH 1/10W 47K	1	
R11,12		VREO034E153	M.RESISTOR CH 1/10W 15K	2	
R13,14		VREO034E472	M.RESISTOR CH 1/10W 4.7K	2	
R15		ERJ6GEYJ105	M.RESISTOR CH 1/10W 1M	1	
R16		VREO034E153	M.RESISTOR CH 1/10W 15K	1	
R17		ERJ6GEYJ221	M.RESISTOR CH 1/10W 220	1	
R18,19		ERJ6GEYJ103	M.RESISTOR CH 1/10W 10K	2	
R20,21		ERJ6GEYJ473	M.RESISTOR CH 1/10W 47K	2	
R101,02		ERJ6GEYJ752	M.RESISTOR CH 1/10W 7.5K	2	
R103		ERJ6GEYJ391	M.RESISTOR CH 1/10W 390	1	
R104		ERJ6GEYJ621	M.RESISTOR CH 1/10W 620	1	
R105		ERJ6GEYJ122	M.RESISTOR CH 1/10W 1.2K	1	
R106		ERJ6GEYJ471	M.RESISTOR CH 1/10W 470	1	
R108,09		ERJ6GEYJ104	M.RESISTOR CH 1/10W 100K	2	
R110		VREO034E472	M.RESISTOR CH 1/10W 4.7K	1	
R111		VREO034E332	M.RESISTOR CH 1/10W 3.3K	1	
R112		VREO034E222	M.RESISTOR CH 1/10W 2.2K	1	
R113		VREO034E332	M.RESISTOR CH 1/10W 3.3K	1	
R114-16		VREO034E472	M.RESISTOR CH 1/10W 4.7K	3	
R118		ERJ6GEYJ223	M.RESISTOR CH 1/10W 22K	1	
R119		ERJ6GEYG301	M.RESISTOR CH 1/10W 300	1	
R120		ERJ6GEYG152	M.RESISTOR CH 1/10W 1.5K	1	
R121		ERJ6GEYG332	M.RESISTOR CH 1/10W 3.3K	1	
R122		ERJ6GEYG821	M.RESISTOR CH 1/10W 820	1	
R123		ERJ6GEYG563	M.RESISTOR CH 1/10W 56K	1	
R124		ERJ6GEYG562	M.RESISTOR CH 1/10W 5.6K	1	
R125		ERJ6GEYG222	M.RESISTOR CH 1/10W 2.2K	1	
R126		ERJ6GEYJ681	M.RESISTOR CH 1/10W 680	1	
R127		ERJ6GEYJ122	M.RESISTOR CH 1/10W 1.2K	1	
R128,29		ERG12SJ220	M.RESISTOR 1/2W 22	2	
R130		ERX12SJ4R7	M.RESISTOR 1/2W 4.7	1	
R131		ERJ6GEYJ103	M.RESISTOR CH 1/10W 10K	1	
R132		VREO034E151	M.RESISTOR CH 1/10W 150	1	
R133		VREO034E330	M.RESISTOR CH 1/10W 33	1	
R134		ERJ6GEYJ103	M.RESISTOR CH 1/10W 10K	1	
R135,36		ERG12SJ220	M.RESISTOR 1/2W 22	2	
R137		ERX12SJ4R7	M.RESISTOR 1/2W 4.7	1	
R201,02		ERJ6GEYJ752	M.RESISTOR CH 1/10W 7.5K	2	
R203		ERJ6GEYJ391	M.RESISTOR CH 1/10W 390	1	
R204		ERJ6GEYJ621	M.RESISTOR CH 1/10W 620	1	
R205		ERJ6GEYJ122	M.RESISTOR CH 1/10W 1.2K	1	
R206		ERJ6GEYJ471	M.RESISTOR CH 1/10W 470	1	
R208,09		ERJ6GEYJ104	M.RESISTOR CH 1/10W 100K	2	
R210		VREO034E472	M.RESISTOR CH 1/10W 4.7K	1	
R211		VREO034E332	M.RESISTOR CH 1/10W 3.3K	1	
R212		VREO034E222	M.RESISTOR CH 1/10W 2.2K	1	
R213		VREO034E332	M.RESISTOR CH 1/10W 3.3K	1	
R214-16		VREO034E472	M.RESISTOR CH 1/10W 4.7K	3	
R218		ERJ6GEYJ223	M.RESISTOR CH 1/10W 22K	1	
R219		ERJ6GEYG301	M.RESISTOR CH 1/10W 300	1	
R220		ERJ6GEYG152	M.RESISTOR CH 1/10W 1.5K	1	

Ref.No.		Part No.	Part Name & Description	Pcs	Remarks
R221		ERJ6GEYG332	M.RESISTOR CH 1/10W 3.3K	1	
R222		ERJ6GEYG821	M.RESISTOR CH 1/10W 820	1	
R223		ERJ6GEYG563	M.RESISTOR CH 1/10W 56K	1	
R224		ERJ6GEYG562	M.RESISTOR CH 1/10W 5.6K	1	
R225		ERJ6GEYG222	M.RESISTOR CH 1/10W 2.2K	1	
R226		ERJ6GEYJ681	M.RESISTOR CH 1/10W 680	1	
R227		ERJ6GEYJ122	M.RESISTOR CH 1/10W 1.2K	1	
R228,29		ERG12SJ220	M.RESISTOR 1/2W 22	2	
R230		ERX12SJ4R7	M.RESISTOR 1/2W 4.7	1	
R231		ERJ6GEYJ103	M.RESISTOR CH 1/10W 10K	1	
R232		VREO034E151	M.RESISTOR CH 1/10W 150	1	
R233		VREO034E330	M.RESISTOR CH 1/10W 33	1	
R234		ERJ6GEYJ103	M.RESISTOR CH 1/10W 10K	1	
R235,36		ERG12SJ220	M.RESISTOR 1/2W 22	2	
R237		ERX12SJ4R7	M.RESISTOR 1/2W 4.7	1	
R319		ERJ6GEYG301	M.RESISTOR CH 1/10W 300	1	
R320		ERJ6GEYG152	M.RESISTOR CH 1/10W 1.5K	1	
R321		ERJ6GEYG332	M.RESISTOR CH 1/10W 3.3K	1	
R322		ERJ6GEYG821	M.RESISTOR CH 1/10W 820	1	
R323		ERJ6GEYG563	M.RESISTOR CH 1/10W 56K	1	
R324		ERJ6GEYG562	M.RESISTOR CH 1/10W 5.6K	1	
R325		ERJ6GEYG222	M.RESISTOR CH 1/10W 2.2K	1	
R326		ERJ6GEYJ681	M.RESISTOR CH 1/10W 680	1	
R327		ERJ6GEYJ122	M.RESISTOR CH 1/10W 1.2K	1	
R328,29		ERG12SJ220	M.RESISTOR 1/2W 22	2	
R330		ERX12SJ4R7	M.RESISTOR 1/2W 4.7	1	
R331		ERJ6GEYJ103	M.RESISTOR CH 1/10W 10K	1	
R332		VREO034E151	M.RESISTOR CH 1/10W 150	1	
R333		VREO034E330	M.RESISTOR CH 1/10W 33	1	
R334		ERJ6GEYJ103	M.RESISTOR CH 1/10W 10K	1	
R335,36		ERG12SJ220	M.RESISTOR 1/2W 22	2	
R337		ERX12SJ4R7	M.RESISTOR 1/2W 4.7	1	
R419		ERJ6GEYG301	M.RESISTOR CH 1/10W 300	1	
R420		ERJ6GEYG152	M.RESISTOR CH 1/10W 1.5K	1	
R421		ERJ6GEYG332	M.RESISTOR CH 1/10W 3.3K	1	
R422		ERJ6GEYG821	M.RESISTOR CH 1/10W 820	1	
R423		ERJ6GEYG563	M.RESISTOR CH 1/10W 56K	1	
R424		ERJ6GEYG562	M.RESISTOR CH 1/10W 5.6K	1	
R425		ERJ6GEYG222	M.RESISTOR CH 1/10W 2.2K	1	
R426		ERJ6GEYJ681	M.RESISTOR CH 1/10W 680	1	
R427		ERJ6GEYJ122	M.RESISTOR CH 1/10W 1.2K	1	
R428,29		ERG12SJ220	M.RESISTOR 1/2W 22	2	
R430		ERX12SJ4R7	M.RESISTOR 1/2W 4.7	1	
R431		ERJ6GEYJ103	M.RESISTOR CH 1/10W 10K	1	
R432		VREO034E151	M.RESISTOR CH 1/10W 150	1	
R433		VREO034E330	M.RESISTOR CH 1/10W 33	1	
R434		ERJ6GEYJ103	M.RESISTOR CH 1/10W 10K	1	
R435,36		ERG12SJ220	M.RESISTOR 1/2W 22	2	
R437		ERX12SJ4R7	M.RESISTOR 1/2W 4.7	1	
R726		ERJ6GEYJ102	M.RESISTOR CH 1/10W 1K	1	
R727		ERJ6GEYOR00	M.RESISTOR CH 1/10W 0	1	
R728,29		ERG12SJ220	M.RESISTOR 1/2W 22	2	
R730		ERX12SJ4R7	M.RESISTOR 1/2W 4.7	1	
R731		ERJ6GEYJ103	M.RESISTOR CH 1/10W 10K	1	
R732		VREO034E151	M.RESISTOR CH 1/10W 150	1	
R733		VREO034E330	M.RESISTOR CH 1/10W 33	1	
R734		ERJ6GEYJ103	M.RESISTOR CH 1/10W 10K	1	
R735,36		ERG12SJ220	M.RESISTOR 1/2W 22	2	
R737		ERX12SJ4R7	M.RESISTOR 1/2W 4.7	1	
R739		ERJ6GEYJ103	M.RESISTOR CH 1/10W 10K	1	
R741		ERJ6GEYJ103	M.RESISTOR CH 1/10W 10K	1	
R801		ERJ6GEYOR00	M.RESISTOR CH 1/10W 0	1	
R802,03		ERJ6GEYJ104	M.RESISTOR CH 1/10W 100K	2	
R809		ERJ6GEYJ153	M.RESISTOR CH 1/10W 15K	1	
R810		ERJ6GEYJ473	M.RESISTOR CH 1/10W 47K	1	
R811-13		ERJ6GEYJ223	M.RESISTOR CH 1/10W 22K	3	
R814,15		ERJ6GEYJ331	M.RESISTOR CH 1/10W 330	2	
R816		ERJ6GEYJ101	M.RESISTOR CH 1/10W 100	1	
R817		ERJ6GEYJ682	M.RESISTOR CH 1/10W 6.8K	1	
R818		ERJ6GEYJ101	M.RESISTOR CH 1/10W 100	1	
R819		ERJ6GEYJ332	M.RESISTOR CH 1/10W 3.3K	1	
R820		ERJ6GEYJ682	M.RESISTOR CH 1/10W 6.8K	1	
R821		ERJ6GEYJ470	M.RESISTOR CH 1/10W 47	1	
R822,23		ERJ6GEYJ822	M.RESISTOR CH 1/10W 8.2K	2	
R824		ERJ6GEYJ470	M.RESISTOR CH 1/10W 47	1	

Refer to the P.C.BOARDS LIST, page 6-1-1, before using this page.

Ref.No.		Part No.	Part Name & Description	Pcs	Remarks
R825		ERJ6GEYJ362	M.RESISTOR CH 1/10W 3.6K	1	
R826,27		ERJ6GEYJ103	M.RESISTOR CH 1/10W 10K	2	
R828		ERG1SJ220	M.RESISTOR 1W 22	1	
R829		ERJ6GEYJ104	M.RESISTOR CH 1/10W 100K	1	
R830,31		ERJ6GEYJ103	M.RESISTOR CH 1/10W 10K	2	
R832		ERG1SJ220	M.RESISTOR 1W 22	1	
R833		ERJ6GEY0R00	M.RESISTOR CH 1/10W 0	1	
SW101,02		VSS0182	SWITCH	2	
SW302		VSS0182	SWITCH	1	
	■	VEP84094C	P.C.BOARD W/COMPONENT		FOR AU-63-P,E,B
			AUDIO IN/OUT		AU-62-P,E,B
	■	VEP80573A	P.C.BOARD W/COMPONENT		ON VEP84094C
			AUDIO IN/OUT SUB		
			CAPACITORS		
C1		ECUM1H470JCN	P.CAPACITOR 50V 47P	1	
C2		ECUM1H473ZFN	C.CAPACITOR CH 50V 0.047U	1	
C5		ECUM1H470JCN	P.CAPACITOR 50V 47P	1	
C6		ECUM1H473ZFN	C.CAPACITOR CH 50V 0.047U	1	
C107		ECEA1CPZ101	E.CAPACITOR 16V 100U	1	
C108,09		ECEA1CPZ301	E.CAPACITOR 16V 300U	2	
C115-18		ECEA1CPZ100	E.CAPACITOR 16V 10U	4	
C207		ECEA1CPZ101	E.CAPACITOR 16V 100U	1	
C208,09		ECEA1CPZ301	E.CAPACITOR 16V 300U	2	
C215-18		ECEA1CPZ100	E.CAPACITOR 16V 10U	4	
C307		ECEA1CPZ101	E.CAPACITOR 16V 100U	1	
C308,09		ECEA1CPZ301	E.CAPACITOR 16V 300U	2	
C315-18		ECEA1CPZ100	E.CAPACITOR 16V 10U	4	
C407		ECEA1CPZ101	E.CAPACITOR 16V 100U	1	
C408,09		ECEA1CPZ301	E.CAPACITOR 16V 300U	2	
C415-18		ECEA1CPZ100	E.CAPACITOR 16V 10U	4	
C707		ECEA1CPZ101	E.CAPACITOR 16V 100U	1	
C708,09		ECEA1CPZ301	E.CAPACITOR 16V 300U	2	
C710		ECEA1CBZ100	E.CAPACITOR 16V 10U	1	
C714		ECEA1CBZ100	E.CAPACITOR 16V 10U	1	
C715-18		ECEA1CPZ100	E.CAPACITOR 16V 10U	4	
C804,05		ECEA1CPZ101	E.CAPACITOR 16V 100U	2	
C806		ECUM1E104ZFN	C.CAPACITOR CH 25V 0.1U	1	
C807,08		ECEA1CPZ101	E.CAPACITOR 16V 100U	2	
C809		ECUM1E104ZFN	C.CAPACITOR CH 25V 0.1U	1	
C810,11		ECEA1CPZ101	E.CAPACITOR 16V 100U	2	
C812		ECUM1H473ZFN	C.CAPACITOR CH 50V 0.047U	1	
C813,14		ECEA1CPZ101	E.CAPACITOR 16V 100U	2	
C815		ECUM1H473ZFN	C.CAPACITOR CH 50V 0.047U	1	
C816		ECEA1CU101	E.CAPACITOR 16V 100U	1	
C817,18		ECEA1CN330S	E.CAPACITOR 16V 33U	2	
C819		ECEA1VU470	E.CAPACITOR 35V 47U	1	
C820		ECEA1HU3R3	E.CAPACITOR 50V 3.3U	1	
C821		ECEA1VU470	E.CAPACITOR 35V 47U	1	
C822		ECEA1HU3R3	E.CAPACITOR 50V 3.3U	1	
C823		ECEA1CU101	E.CAPACITOR 16V 100U	1	
CN200		VJP1237R	CONNECTOR(MALE) 10P	1	
CN201		VJP1231T	CONNECTOR(MALE) 4P	1	
CN202		VJP1230T	CONNECTOR(MALE) 3P	1	
CN203		VJP1511T	CONNECTOR(MALE)	1	
CN205,06		VJP1230T	CONNECTOR(MALE) 3P	2	
CN207		VJP1239T	CONNECTOR(MALE) 12P	1	
CN211,12		VJP1230R	CONNECTOR(MALE) 3P	2	
CN215		VJP1230B	CONNECTOR (MALE)	1	

Ref.No.		Part No.	Part Name & Description	Pcs	Remarks
D1,D2		MA153	DIODE	2	
D105		HZ2ALL	DIODE	1	
D106		MA153	DIODE	1	
D107,08		HZ2ALL	DIODE	2	
D109		MA153	DIODE	1	
D110		HZ2ALL	DIODE	1	
D205		HZ2ALL	DIODE	1	
D206		MA153	DIODE	1	
D207,08		HZ2ALL	DIODE	2	
D209		MA153	DIODE	1	
D210		HZ2ALL	DIODE	1	
D305		HZ2ALL	DIODE	1	
D306		MA153	DIODE	1	
D307,08		HZ2ALL	DIODE	2	
D309		MA153	DIODE	1	
D310		HZ2ALL	DIODE	1	
D405		HZ2ALL	DIODE	1	
D406		MA153	DIODE	1	
D407,08		HZ2ALL	DIODE	2	
D409		MA153	DIODE	1	
D410		HZ2ALL	DIODE	1	
D705		HZ2ALL	DIODE	1	
D706		MA153	DIODE	1	
D707,08		HZ2ALL	DIODE	2	
D709		MA153	DIODE	1	
D710		HZ2ALL	DIODE	1	
D802,03		MA151K	DIODE	2	
IC1		RC4556MB	IC	1	
IC103		NJM4558M	IC	1	
IC105		VEP80573A	P.C.BOARD W/COMPONENT	1	AUDIO IN/OUT SUB
IC205		VEP80573A	P.C.BOARD W/COMPONENT	1	AUDIO IN/OUT SUB
IC303		NJM4558M	IC	1	
IC305		VEP80573A	P.C.BOARD W/COMPONENT	1	AUDIO IN/OUT SUB
IC405		VEP80573A	P.C.BOARD W/COMPONENT	1	AUDIO IN/OUT SUB
IC703,04		NJM4558M	IC	2	
IC705		VEP80573A	P.C.BOARD W/COMPONENT	1	AUDIO IN/OUT SUB
IC803		AN78N09	IC	1	
IC804		AN79N09	IC	1	
IC805		UPD4053BG	IC	1	
IC806		UPD4052BG	IC	1	
IC808		RC4560MD	IC	1	
P1		VJR0312	CONNECTOR (MALE)	1	

Refer to the P.C.BOARDS LIST, page 6-1-1, before using this page.

Ref.No.		Part No.	Part Name & Description	Pcs	Remarks
Q1-Q4		2SD1328	TRANSISTOR CHIP	4	(Q,R)
Q101		2SC1847	TRANSISTOR	1	(R)
Q102		2SA886V	TRANSISTOR	1	(R)
Q103		2SC1847	TRANSISTOR	1	(R)
Q104		2SA886V	TRANSISTOR	1	(R)
Q201		2SC1847	TRANSISTOR	1	(R)
Q202		2SA886V	TRANSISTOR	1	(R)
Q203		2SC1847	TRANSISTOR	1	(R)
Q204		2SA886V	TRANSISTOR	1	(R)
Q301		2SC1847	TRANSISTOR	1	(R)
Q302		2SA886V	TRANSISTOR	1	(R)
Q303		2SC1847	TRANSISTOR	1	(R)
Q304		2SA886V	TRANSISTOR	1	(R)
Q401		2SC1847	TRANSISTOR	1	(R)
Q402		2SA886V	TRANSISTOR	1	(R)
Q403		2SC1847	TRANSISTOR	1	(R)
Q404		2SA886V	TRANSISTOR	1	(R)
Q701		2SC1847	TRANSISTOR	1	(R)
Q702		2SA886V	TRANSISTOR	1	(R)
Q703		2SC1847	TRANSISTOR	1	(R)
Q704		2SA886V	TRANSISTOR	1	(R)
Q801		2SD602	TRANSISTOR	1	(Q,R)
Q802		2SB710	TRANSISTOR	1	(Q,R)
Q803,04		UN2213	TRANSISTOR-RESISTOR	2	
Q805		UN2114	TRANSISTOR-RESISTOR	1	
Q806		UN2213	TRANSISTOR-RESISTOR	1	
Q807		UN2114	TRANSISTOR-RESISTOR	1	
			RESISTORS		
R1-R3		VRE0034E472	M.RESISTOR CH 1/10W 4.7K	3	
R4		ERJ6GEYJ105	M.RESISTOR CH 1/10W 1M	1	
R5		VRE0034E153	M.RESISTOR CH 1/10W 15K	1	
R6		ERJ6GEYJ221	M.RESISTOR CH 1/10W 220	1	
R7,R8		ERJ6GEYJ103	M.RESISTOR CH 1/10W 10K	2	
R9		ERJ6GEYJ473	M.RESISTOR CH 1/10W 47K	1	
R10		ERJ6GEYJ473	M.RESISTOR CH 1/10W 47K	1	
R11,12		VRE0034E153	M.RESISTOR CH 1/10W 15K	2	
R13,14		VRE0034E472	M.RESISTOR CH 1/10W 4.7K	2	
R15		ERJ6GEYJ105	M.RESISTOR CH 1/10W 1M	1	
R16		VRE0034E153	M.RESISTOR CH 1/10W 15K	1	
R17		ERJ6GEYJ221	M.RESISTOR CH 1/10W 220	1	
R18,19		ERJ6GEYJ103	M.RESISTOR CH 1/10W 10K	2	
R20,21		ERJ6GEYJ473	M.RESISTOR CH 1/10W 47K	2	
R119		ERJ6GEYG301	M.RESISTOR CH 1/10W 300	1	
R120		ERJ6GEYG152	M.RESISTOR CH 1/10W 1.5K	1	
R121		ERJ6GEYG332	M.RESISTOR CH 1/10W 3.3K	1	
R122		ERJ6GEYG821	M.RESISTOR CH 1/10W 820	1	
R123		ERJ6GEYG563	M.RESISTOR CH 1/10W 56K	1	
R124		ERJ6GEYG562	M.RESISTOR CH 1/10W 5.6K	1	
R125		ERJ6GEYG222	M.RESISTOR CH 1/10W 2.2K	1	
R126		ERJ6GEYJ681	M.RESISTOR CH 1/10W 680	1	
R127		ERJ6GEYJ122	M.RESISTOR CH 1/10W 1.2K	1	
R128,29		ERG12SJ220	M.RESISTOR 1/2W 22	2	
R130		ERX12SJ4R7	M.RESISTOR 4.7	1	
R131		ERJ6GEYJ103	M.RESISTOR CH 1/10W 10K	1	
R132		VRE0034E151	M.RESISTOR CH 1/10W 150	1	
R133		VRE0034E330	M.RESISTOR CH 1/10W 33	1	
R134		ERJ6GEYJ103	M.RESISTOR CH 1/10W 10K	1	
R135,36		ERG12SJ220	M.RESISTOR 1/2W 22	2	
R137		ERX12SJ4R7	M.RESISTOR 4.7	1	
R219		ERJ6GEYG301	M.RESISTOR CH 1/10W 300	1	
R220		ERJ6GEYG152	M.RESISTOR CH 1/10W 1.5K	1	
R221		ERJ6GEYG332	M.RESISTOR CH 1/10W 3.3K	1	
R222		ERJ6GEYG821	M.RESISTOR CH 1/10W 820	1	
R223		ERJ6GEYG563	M.RESISTOR CH 1/10W 56K	1	
R224		ERJ6GEYG562	M.RESISTOR CH 1/10W 5.6K	1	
R225		ERJ6GEYG222	M.RESISTOR CH 1/10W 2.2K	1	
R226		ERJ6GEYJ681	M.RESISTOR CH 1/10W 680	1	
R227		ERJ6GEYJ122	M.RESISTOR CH 1/10W 1.2K	1	
R228,29		ERG12SJ220	M.RESISTOR 1/2W 22	2	

Ref.No.		Part No.	Part Name & Description	Pcs	Remarks
R230		ERX12SJ4R7	M.RESISTOR 4.7	1	
R231		ERJ6GEYJ103	M.RESISTOR CH 1/10W 10K	1	
R232		VRE0034E151	M.RESISTOR CH 1/10W 150	1	
R233		VRE0034E330	M.RESISTOR CH 1/10W 33	1	
R234		ERJ6GEYJ103	M.RESISTOR CH 1/10W 10K	1	
R235,36		ERG12SJ220	M.RESISTOR 1/2W 22	2	
R237		ERX12SJ4R7	M.RESISTOR 4.7	1	
R319		ERJ6GEYG301	M.RESISTOR CH 1/10W 300	1	
R320		ERJ6GEYG152	M.RESISTOR CH 1/10W 1.5K	1	
R321		ERJ6GEYG332	M.RESISTOR CH 1/10W 3.3K	1	
R322		ERJ6GEYG821	M.RESISTOR CH 1/10W 820	1	
R323		ERJ6GEYG563	M.RESISTOR CH 1/10W 56K	1	
R324		ERJ6GEYG562	M.RESISTOR CH 1/10W 5.6K	1	
R325		ERJ6GEYG222	M.RESISTOR CH 1/10W 2.2K	1	
R326		ERJ6GEYJ681	M.RESISTOR CH 1/10W 680	1	
R327		ERJ6GEYJ122	M.RESISTOR CH 1/10W 1.2K	1	
R328,29		ERG12SJ220	M.RESISTOR 1/2W 22	2	
R330		ERX12SJ4R7	M.RESISTOR 4.7	1	
R331		ERJ6GEYJ103	M.RESISTOR CH 1/10W 10K	1	
R332		VRE0034E151	M.RESISTOR CH 1/10W 150	1	
R333		VRE0034E330	M.RESISTOR CH 1/10W 33	1	
R334		ERJ6GEYJ103	M.RESISTOR CH 1/10W 10K	1	
R335,36		ERG12SJ220	M.RESISTOR 1/2W 22	2	
R337		ERX12SJ4R7	M.RESISTOR 4.7	1	
R419		ERJ6GEYG301	M.RESISTOR CH 1/10W 300	1	
R420		ERJ6GEYG152	M.RESISTOR CH 1/10W 1.5K	1	
R421		ERJ6GEYG332	M.RESISTOR CH 1/10W 3.3K	1	
R422		ERJ6GEYG821	M.RESISTOR CH 1/10W 820	1	
R423		ERJ6GEYG563	M.RESISTOR CH 1/10W 56K	1	
R424		ERJ6GEYG562	M.RESISTOR CH 1/10W 5.6K	1	
R425		ERJ6GEYG222	M.RESISTOR CH 1/10W 2.2K	1	
R426		ERJ6GEYJ681	M.RESISTOR CH 1/10W 680	1	
R427		ERJ6GEYJ122	M.RESISTOR CH 1/10W 1.2K	1	
R428,29		ERG12SJ220	M.RESISTOR 1/2W 22	2	
R430		ERX12SJ4R7	M.RESISTOR 4.7	1	
R431		ERJ6GEYJ103	M.RESISTOR CH 1/10W 10K	1	
R432		VRE0034E151	M.RESISTOR CH 1/10W 150	1	
R433		VRE0034E330	M.RESISTOR CH 1/10W 33	1	
R434		ERJ6GEYJ103	M.RESISTOR CH 1/10W 10K	1	
R435,36		ERG12SJ220	M.RESISTOR 1/2W 22	2	
R437		ERX12SJ4R7	M.RESISTOR 4.7	1	
R726		ERJ6GEYJ102	M.RESISTOR CH 1/10W 1K	1	
R727		ERJ6GEY0R00	M.RESISTOR CH 1/10W 0	1	
R728,29		ERG12SJ220	M.RESISTOR 1/2W 22	2	
R730		ERX12SJ4R7	M.RESISTOR 4.7	1	
R731		ERJ6GEYJ103	M.RESISTOR CH 1/10W 10K	1	
R732		VRE0034E151	M.RESISTOR CH 1/10W 150	1	
R733		VRE0034E330	M.RESISTOR CH 1/10W 33	1	
R734		ERJ6GEYJ103	M.RESISTOR CH 1/10W 10K	1	
R735,36		ERG12SJ220	M.RESISTOR 1/2W 22	2	
R737		ERX12SJ4R7	M.RESISTOR 4.7	1	
R739		ERJ6GEYJ103	M.RESISTOR CH 1/10W 10K	1	
R741		ERJ6GEYJ103	M.RESISTOR CH 1/10W 10K	1	
R811-13		ERJ6GEYJ223	M.RESISTOR CH 1/10W 22K	3	
R814,15		ERJ6GEYJ331	M.RESISTOR CH 1/10W 330	2	
R816		ERJ6GEYJ101	M.RESISTOR CH 1/10W 100	1	
R817		ERJ6GEYJ682	M.RESISTOR CH 1/10W 6.8K	1	
R818		ERJ6GEYJ101	M.RESISTOR CH 1/10W 100	1	
R819		ERJ6GEYJ332	M.RESISTOR CH 1/10W 3.3K	1	
R820		ERJ6GEYJ682	M.RESISTOR CH 1/10W 6.8K	1	
R821		ERJ6GEYJ470	M.RESISTOR CH 1/10W 47	1	
R822,23		ERJ6GEYJ822	M.RESISTOR CH 1/10W 8.2K	2	
R824		ERJ6GEYJ470	M.RESISTOR CH 1/10W 47	1	
R825		ERJ6GEYJ362	M.RESISTOR CH 1/10W 3.6K	1	
R826,27		ERJ6GEYJ103	M.RESISTOR CH 1/10W 10K	2	
R828		ERG1SJ220	M.RESISTOR 1W 22	1	
R829		ERJ6GEYJ104	M.RESISTOR CH 1/10W 100K	1	
R830,31		ERJ6GEYJ103	M.RESISTOR CH 1/10W 10K	2	
R832		ERG1SJ220	M.RESISTOR 1W 22	1	
SW102		VSS0182	SWITCH	1	
SW302		VSS0182	SWITCH	1	

Refer to the P.C.BOARDS LIST, page 6-1-1, before using this page.

Ref.No.		Part No.	Part Name & Description	Pcs	Remarks
	■	VEP84101A	P.C.BOARD W/COMPONENT		FOR AU-65-P,E,B
			AUDIO VR		
			CAPACITORS		
C1-C4		ECEA1CBZ100	E.CAPACITOR 16V 10U	4	
C5-C8		ECEA1CPZ101	E.CAPACITOR 16V 100U	4	
CN160		VJP1234T	CONNECTOR(MALE) 7P	1	
CN161		VJP1231T	CONNECTOR(MALE) 4P	1	
CN162		VJP1235T	CONNECTOR(MALE) 8P	1	
CN163		VJP1931T	CONNECTOR (MALE)	1	
IC1,C2		NJM4558D	IC	2	
IC3		AN78N09	IC	1	
IC4		AN79N09	IC	1	
			RESISTORS		
R1		ERDS2TJ103	C.RESISTOR 1/4W 10K	1	
R2		ERDS2TJ102	C.RESISTOR 1/4W 1K	1	
R3		ERDS2TJ104	C.RESISTOR 1/4W 100K	1	
R4		ERDS2TJ102	C.RESISTOR 1/4W 1K	1	
R5		ERDS2TJ332	C.RESISTOR 1/4W 3.3K	1	
R6		ERDS2TJ104	C.RESISTOR 1/4W 100K	1	
R7		ERDS2TJ103	C.RESISTOR 1/4W 10K	1	
R8		ERDS2TJ102	C.RESISTOR 1/4W 1K	1	
R9		ERDS2TJ104	C.RESISTOR 1/4W 100K	1	
R10,11		ERDS2TJ102	C.RESISTOR 1/4W 1K	2	
R12		ERDS2TJ104	C.RESISTOR 1/4W 100K	1	
R13		ERDS2TJ103	C.RESISTOR 1/4W 10K	1	
R14		ERDS2TJ102	C.RESISTOR 1/4W 1K	1	
R15		ERDS2TJ104	C.RESISTOR 1/4W 100K	1	
R16		ERDS2TJ102	C.RESISTOR 1/4W 1K	1	
R17		ERDS2TJ332	C.RESISTOR 1/4W 3.3K	1	
R18		ERDS2TJ104	C.RESISTOR 1/4W 100K	1	
R19		ERDS2TJ103	C.RESISTOR 1/4W 10K	1	
R20		ERDS2TJ102	C.RESISTOR 1/4W 1K	1	
R21		ERDS2TJ104	C.RESISTOR 1/4W 100K	1	
R22,23		ERDS2TJ102	C.RESISTOR 1/4W 1K	2	
R24		ERDS2TJ104	C.RESISTOR 1/4W 100K	1	
R28,29		ERDS2TJ183	C.RESISTOR 1/4W 18K	2	
SW1		VSS0305	SWITCH	1	
VR1		VRV0109B502	V.RESISTOR 5K	1	
VR2		EVU013320A14	V.RESISTOR 10K	1	
VR3		VRV0109B502	V.RESISTOR 5K	1	
VR4		EVU013020A14	V.RESISTOR 10K	1	
VR5		VRV0109B502	V.RESISTOR 5K	1	
VR6		EVU013320A14	V.RESISTOR 10K	1	
VR7		VRV0109B502	V.RESISTOR 5K	1	
VR8		EVU013020A14	V.RESISTOR 10K	1	
VR10		EVU023020B14	V.RESISTOR 10K	1	
VR11		EVUL7A020B54	V.RESISTOR 50K	1	

Ref.No.		Part No.	Part Name & Description	Pcs	Remarks
			MISCELLANEOUS		
		VMP2605	P.C.B. HOLDER ANGLE	1	
	■	VEP84101B	P.C.BOARD W/COMPONENT		FOR AU-62-P,E,B
			AUDIO VR		
			CAPACITORS		
C2		ECEA1CBZ100	E.CAPACITOR 16V 10U	1	
C4		ECEA1CBZ100	E.CAPACITOR 16V 10U	1	
C5-C8		ECEA1CPZ101	E.CAPACITOR 16V 100U	4	
CN160		VJP1234T	CONNECTOR(MALE) 7P	1	
CN162		VJP1235T	CONNECTOR(MALE) 8P	1	
CN163		VJP1931T	CONNECTOR (MALE)	1	
IC1,C2		NJM4558D	IC	2	
IC3		AN78N09	IC	1	
IC4		AN79N09	IC	1	
			RESISTORS		
R7		ERDS2TJ103	C.RESISTOR 1/4W 10K	1	
R8		ERDS2TJ102	C.RESISTOR 1/4W 1K	1	
R9		ERDS2TJ104	C.RESISTOR 1/4W 100K	1	
R10,11		ERDS2TJ102	C.RESISTOR 1/4W 1K	2	
R12		ERDS2TJ104	C.RESISTOR 1/4W 100K	1	
R19		ERDS2TJ103	C.RESISTOR 1/4W 10K	1	
R20		ERDS2TJ102	C.RESISTOR 1/4W 1K	1	
R21		ERDS2TJ104	C.RESISTOR 1/4W 100K	1	
R22,23		ERDS2TJ102	C.RESISTOR 1/4W 1K	2	
R24		ERDS2TJ104	C.RESISTOR 1/4W 100K	1	
SW1		VSS0305	SWITCH	1	
VR3		VRV0109B502	V.RESISTOR 5K	1	
VR4		EVU013020A14	V.RESISTOR 10K	1	
VR7		VRV0109B502	V.RESISTOR 5K	1	
VR8		EVU013020A14	V.RESISTOR 10K	1	
VR11		EVUL7A020B54	V.RESISTOR 50K	1	
			MISCELLANEOUS		
		VMP2605	P.C.B. HOLDER ANGLE	1	
	■	VEP84101C	P.C.BOARD W/COMPONENT		FOR AU-63-P,E,B
			AUDIO VR		

Refer to the P.C.BOARDS LIST, page 6-1-1, before using this page.

Ref.No.		Part No.	Part Name & Description	Pcs	Remarks
			CAPACITORS		
C2		ECEA1CBZ100	E.CAPACITOR 16V 10U	1	
C4		ECEA1CBZ100	E.CAPACITOR 16V 10U	1	
C5-C8		ECEA1CPZ101	E.CAPACITOR 16V 100U	4	
CN160		VJP1234T	CONNECTOR(MALE) 7P	1	
CN162		VJP1235T	CONNECTOR(MALE) 8P	1	
CN163		VJP1931T	CONNECTOR(MALE)	1	
IC1,C2		NJM4558D	IC	2	
IC3		AN78N09	IC	1	
IC4		AN79N09	IC	1	
			RESISTORS		
R7		ERDS2TJ103	C.RESISTOR 1/4W 10K	1	
R8		ERDS2TJ102	C.RESISTOR 1/4W 1K	1	
R9		ERDS2TJ104	C.RESISTOR 1/4W 100K	1	
R10,11		ERDS2TJ102	C.RESISTOR 1/4W 1K	2	
R12		ERDS2TJ104	C.RESISTOR 1/4W 100K	1	
R19		ERDS2TJ103	C.RESISTOR 1/4W 10K	1	
R20		ERDS2TJ102	C.RESISTOR 1/4W 1K	1	
R21		ERDS2TJ104	C.RESISTOR 1/4W 100K	1	
R22,23		ERDS2TJ102	C.RESISTOR 1/4W 1K	2	
R24		ERDS2TJ104	C.RESISTOR 1/4W 100K	1	
SW1		VSS0305	SWITCH	1	
VR3		VRV0109B502	V.RESISTOR 5K	1	
VR4		EVU013020A14	V.RESISTOR 10K	1	
VR7		VRV0109B502	V.RESISTOR 5K	1	
VR8		EVU013020A14	V.RESISTOR 10K	1	
VR11		ERDS2TJ273	C.RESISTOR 1/4W 27K	1	
			MISCELLANEOUS		
		VMP2605	P.C.B. HOLDER ANGLE	1	
	■	VEP00E08C	P.C.BOARD W/COMPONENT		
			AUTO OFF LED		
LED1		VLL0029	LED	1	
P113		VJP1141	CONNECTOR(MALE) 2P	1	
			RESISTORS		
R1		ERDS2TJ390	C.RESISTOR 1/4W 39	1	

Ref.No.		Part No.	Part Name & Description	Pcs	Remarks
	■	VEP00E72A	P.C.BOARD W/COMPONENT		
			CASSETTE CARRIAGE LAMP		
			MISCELLANEOUS		
		VLL0019	PILOT LAMP	3	
	■	VEP00E30A	P.C.BOARD W/COMPONENT		
			CASSETTE DETECT		
			MISCELLANEOUS		
		ON1110-R	PHOTO INTERRUPTER	1	
	■	VEP80422B	P.C.BOARD W/COMPONENT		
			EJECT INTERFACE		
P112		VJP1188	CONNECTOR (MALE)	1	
P115		VJP1188	CONNECTOR (MALE)	1	
	■	VEP80232A	P.C.BOARD W/COMPONENT		
			EJECT SW		
LED1		VLL0024	LED	1	
			RESISTORS		
R1		ERDS2TJ271	C.RESISTOR 1/4W 270	1	
SW1		VSP0221	SWITCH	1	
	■	VEP80553A	P.C.BOARD W/COMPONENT		FOR AU-65-P
			FRONT INTERFACE		
			CAPACITORS		
C1-C9		ECKF1H1032F	C.CAPACITOR 50V 0.01U	9	

Refer to the P.C.BOARDS LIST, page 6-1-1, before using this page.

Ref.No.		Part No.	Part Name & Description	Pcs	Remarks
C10-13		ECKF1H103ZF	C.CAPACITOR 50V 0.01U	4	
C15,16		ECKF1H103ZF	C.CAPACITOR 50V 0.01U	2	
C17-22		ECKF1H103ZF	C.CAPACITOR 50V 0.01U	6	
C23		ECQV1H104JZ	P.CAPACITOR 50V 0.1U	1	
C24		ECKF1H391KB	C.CAPACITOR 50V 390P	1	
C25		ECEA1CU101	E.CAPACITOR 16V 100U	1	
C26		ECKF1H103ZF	C.CAPACITOR 50V 0.01U	1	
C27		ECEA1CU101	E.CAPACITOR 16V 100U	1	
C28		ECKF1H103ZF	C.CAPACITOR 50V 0.01U	1	
C29		ECEA1CU330	E.CAPACITOR 16V 33U	1	
C30		ECKF1H103ZF	C.CAPACITOR 50V 0.01U	1	
C33-35		ECEA1CU101	E.CAPACITOR 16V 100U	3	
C101		ECQV1H274JZ	P.CAPACITOR 50V 0.27U	1	
C102		ECEA1CU100	E.CAPACITOR 16V 10U	1	
C103		ECEA1HU4R7	E.CAPACITOR 50V 4.7U	1	
C104		ECQV1H274JZ	P.CAPACITOR 50V 0.27U	1	
C105		ECEA1CU100	E.CAPACITOR 16V 10U	1	
C106		ECEA1HU4R7	E.CAPACITOR 50V 4.7U	1	
C107		ECQV1H274JZ	P.CAPACITOR 50V 0.27U	1	
C108		ECEA1CU100	E.CAPACITOR 16V 10U	1	
C109		ECEA1HU4R7	E.CAPACITOR 50V 4.7U	1	
C110		ECQV1H274JZ	P.CAPACITOR 50V 0.27U	1	
C111		ECEA1CU100	E.CAPACITOR 16V 10U	1	
C112		ECEA1HU4R7	E.CAPACITOR 50V 4.7U	1	
C113,14		ECEA1CBZ100	E.CAPACITOR 16V 10U	2	
C115-18		ECEA1CPZ101	E.CAPACITOR 16V 100U	4	
CN130		VJP1931T	CONNECTOR (MALE)	1	
CN131		VJP1239T	CONNECTOR(MALE) 12P	1	
CN132		VJP1237T	CONNECTOR(MALE) 10P	1	
CN133		VJP1237R	CONNECTOR(MALE) 10P	1	
CN134		VJP1931T	CONNECTOR (MALE)	1	
CN135		VJP1233T	CONNECTOR(MALE) 6P	1	
CN136		VJP1932T	CONNECTOR (MALE)	1	
CN137		VJP1232T	CONNECTOR(MALE) 5P	1	
CN138		VJP1237T	CONNECTOR(MALE) 10P	1	
CN139		VJP1234T	CONNECTOR(MALE) 7P	1	
D1		MA165	DIODE	1	
D6		MA165	DIODE	1	
D101-08		OA95	DIODE	8	
IC1-C3		MC14053BCP	IC	3	
IC4,C5		MC14021BCP	IC	2	
IC6		MC14050BCP	IC	1	
IC7		AN78L12	IC	1	
IC8		AN79L12	IC	1	
IC9		AN79L05	IC	1	
IC101-03		NJM4558D	IC	3	
IC104		AN78L09	IC	1	
IC105		AN79L09	IC	1	
P150		VJP2891A020	CONNECTOR (MALE)	1	
Q1		UN1212	TRANSISTOR-RESISTOR	1	
Q2		UN1213	TRANSISTOR-RESISTOR	1	
Q3,4		2SD636	TRANSISTOR	2	
Q101		2SD636	TRANSISTOR	1	
Q102		2SD1330	TRANSISTOR	1	
Q103		2SD636	TRANSISTOR	1	
Q104		2SD1330	TRANSISTOR	1	
Q105		2SD636	TRANSISTOR	1	
Q106		2SD1330	TRANSISTOR	1	
Q107		2SD636	TRANSISTOR	1	
Q108		2SD1330	TRANSISTOR	1	

Ref.No.		Part No.	Part Name & Description	Pcs	Remarks
			RESISTORS		
R7,R8		ERDS2TJ223	C.RESISTOR 1/4W 22K	2	
R9		ERDS2TJ103	C.RESISTOR 1/4W 10K	1	
R10-16		ERDS2TJ103	C.RESISTOR 1/4W 10K	7	
R25-32		ERDS2TJ103	C.RESISTOR 1/4W 10K	8	
R33,34		ERDS2TJ223	C.RESISTOR 1/4W 22K	2	
R35		ERDS2TJ102	C.RESISTOR 1/4W 1K	1	
R36		ERDS2TJ474	C.RESISTOR 1/4W 470K	1	
R37		ERDS2TJ103	C.RESISTOR 1/4W 10K	1	
R38,39		ERDS2TJ223	C.RESISTOR 1/4W 22K	2	
R40		ERDS2TJ474	C.RESISTOR 1/4W 470K	1	
R41		ERDS2TJ103	C.RESISTOR 1/4W 10K	1	
R42		ERDS2TJ223	C.RESISTOR 1/4W 22K	1	
R45-48		ERDS2TJ103	C.RESISTOR 1/4W 10K	4	
R72,73		ERDS2TJ223	C.RESISTOR 1/4W 22K	2	
R101		ERDS2TJ682	C.RESISTOR 1/4W 6.8K	1	
R102,03		ERDS2TJ223	C.RESISTOR 1/4W 22K	2	
R104		ERDS2TJ221	C.RESISTOR 1/4W 220	1	
R105		ERDS2TJ222	C.RESISTOR 1/4W 2.2K	1	
R106,07		ERDS2TJ103	C.RESISTOR 1/4W 10K	2	
R108		ERDS2TJ682	C.RESISTOR 1/4W 6.8K	1	
R109,10		ERDS2TJ223	C.RESISTOR 1/4W 22K	2	
R111		ERDS2TJ221	C.RESISTOR 1/4W 220	1	
R112		ERDS2TJ222	C.RESISTOR 1/4W 2.2K	1	
R113,14		ERDS2TJ103	C.RESISTOR 1/4W 10K	2	
R115		ERDS2TJ682	C.RESISTOR 1/4W 6.8K	1	
R116,17		ERDS2TJ223	C.RESISTOR 1/4W 22K	2	
R118		ERDS2TJ221	C.RESISTOR 1/4W 220	1	
R119		ERDS2TJ222	C.RESISTOR 1/4W 2.2K	1	
R120,21		ERDS2TJ103	C.RESISTOR 1/4W 10K	2	
R122		ERDS2TJ682	C.RESISTOR 1/4W 6.8K	1	
R123,24		ERDS2TJ223	C.RESISTOR 1/4W 22K	2	
R125		ERDS2TJ221	C.RESISTOR 1/4W 220	1	
R126		ERDS2TJ222	C.RESISTOR 1/4W 2.2K	1	
R127-29		ERDS2TJ103	C.RESISTOR 1/4W 10K	3	
R130		ERDS2TJ102	C.RESISTOR 1/4W 1K	1	
R131		ERDS2TJ104	C.RESISTOR 1/4W 100K	1	
R132		ERDS2TJ102	C.RESISTOR 1/4W 1K	1	
R133		ERDS2TJ562	C.RESISTOR 1/4W 5.6K	1	
R134		ERDS2TJ104	C.RESISTOR 1/4W 100K	1	
R135		ERDS2TJ103	C.RESISTOR 1/4W 10K	1	
R136		ERDS2TJ102	C.RESISTOR 1/4W 1K	1	
R137		ERDS2TJ104	C.RESISTOR 1/4W 100K	1	
R138		ERDS2TJ102	C.RESISTOR 1/4W 1K	1	
R139		ERDS2TJ562	C.RESISTOR 1/4W 5.6K	1	
R140		ERDS2TJ104	C.RESISTOR 1/4W 100K	1	
RA1,A2		EXBF9E103J	COMBI.R-R 10K	2	
SW1-W5		VSS0119	SWITCH	5	
SW6		VSS0243	SWITCH	1	
SW7-11		VSS0119	SWITCH	5	
VR8		EVUF2AE20B53	V.RESISTOR 5K	1	
VR9		VRV0109B502	V.RESISTOR 5K	1	
VR10,11		EVUF2AE20A14	V.RESISTOR 10K	2	
VR12,13		VRV0109B502	V.RESISTOR 5K	2	
VR101-04		VRV0110B203	V.RESISTOR 5K	4	
			MISCELLANEOUS		
		VMP2600	P.C.B. HOLDER ANGLE	1	
		XTV3+6F	SCREW	2	

Refer to the P.C.BOARDS LIST, page 6-1-1, before using this page.

Ref.No.		Part No.	Part Name & Description	Pcs	Remarks
	■	VEP80553B	P.C.BOARD W/COMPONENT		FOR AU-62-P
			FRONT INTERFACE		
			CAPACITORS		
C1-C9		ECKF1H103ZF	C.CAPACITOR 50V 0.01U	9	
C10,11		ECKF1H103ZF	C.CAPACITOR 50V 0.01U	2	
C13		ECKF1H103ZF	C.CAPACITOR 50V 0.01U	1	
C15		ECKF1H103ZF	C.CAPACITOR 50V 0.01U	1	
C17-22		ECKF1H103ZF	C.CAPACITOR 50V 0.01U	6	
C23		ECQV1H104JZ	P.CAPACITOR 50V 0.1U	1	
C24		ECKF1H391KB	C.CAPACITOR 50V 390P	1	
C25		ECEA1CU101	E.CAPACITOR 16V 100U	1	
C26		ECKF1H103ZF	C.CAPACITOR 50V 0.01U	1	
C27		ECEA1CU101	E.CAPACITOR 16V 100U	1	
C28		ECKF1H103ZF	C.CAPACITOR 50V 0.01U	1	
C29		ECEA1CU330	E.CAPACITOR 16V 33U	1	
C30		ECKF1H103ZF	C.CAPACITOR 50V 0.01U	1	
C33-35		ECEA1CU101	E.CAPACITOR 16V 100U	3	
C101		ECQV1H274JZ	P.CAPACITOR 50V 0.27U	1	
C102		ECEA1CU100	E.CAPACITOR 16V 10U	1	
C103		ECEA1HU4R7	E.CAPACITOR 50V 4.7U	1	
C104		ECQV1H274JZ	P.CAPACITOR 50V 0.27U	1	
C105		ECEA1CU100	E.CAPACITOR 16V 10U	1	
C106		ECEA1HU4R7	E.CAPACITOR 50V 4.7U	1	
C107		ECQV1H274JZ	P.CAPACITOR 50V 0.27U	1	
C108		ECEA1CU100	E.CAPACITOR 16V 10U	1	
C109		ECEA1HU4R7	E.CAPACITOR 50V 4.7U	1	
C110		ECQV1H274JZ	P.CAPACITOR 50V 0.27U	1	
C111		ECEA1CU100	E.CAPACITOR 16V 10U	1	
C112		ECEA1HU4R7	E.CAPACITOR 50V 4.7U	1	
C113,14		ECEA1CBZ100	E.CAPACITOR 16V 10U	2	
C115-18		ECEA1CPZ101	E.CAPACITOR 16V 100U	4	
CN130		VJP1931T	CONNECTOR (MALE)	1	
CN131		VJP1239T	CONNECTOR(MALE) 12P	1	
CN132		VJP1237T	CONNECTOR(MALE) 10P	1	
CN133		VJP1237R	CONNECTOR(MALE) 10P	1	
CN134		VJP1931T	CONNECTOR (MALE)	1	
CN135		VJP1233T	CONNECTOR(MALE) 6P	1	
CN136		VJP1932T	CONNECTOR (MALE)	1	
CN137		VJP1232T	CONNECTOR(MALE) 5P	1	
CN138		VJP1237T	CONNECTOR(MALE) 10P	1	
CN139		VJP1234T	CONNECTOR(MALE) 7P	1	
D1		MA165	DIODE	1	
D6		MA165	DIODE	1	
D101-08		QA95	DIODE	8	
IC1-C3		MC14053BCP	IC	3	
IC4,C5		MC14021BCP	IC	2	
IC6		MC14050BCP	IC	1	
IC7		AN78L12	IC	1	
IC8		AN79L12	IC	1	
IC9		AN79L05	IC	1	
IC101-03		NJM4558D	IC	3	
IC104		AN78L09	IC	1	
IC105		AN79L09	IC	1	

Ref.No.		Part No.	Part Name & Description	Pcs	Remarks
P150		VJP2891A020	CONNECTOR (MALE)	1	
Q1		UN1212	TRANSISTOR-RESISTOR	1	
Q101		2SD636	TRANSISTOR	1	
Q102		2SD1330	TRANSISTOR	1	
Q103		2SD636	TRANSISTOR	1	
Q104		2SD1330	TRANSISTOR	1	
Q105		2SD636	TRANSISTOR	1	
Q106		2SD1330	TRANSISTOR	1	
Q107		2SD636	TRANSISTOR	1	
Q108		2SD1330	TRANSISTOR	1	
			RESISTORS		
R7,R8		ERDS2TJ223	C.RESISTOR 1/4W 22K	2	
R9		ERDS2TJ103	C.RESISTOR 1/4W 10K	1	
R10-16		ERDS2TJ103	C.RESISTOR 1/4W 10K	7	
R25-32		ERDS2TJ103	C.RESISTOR 1/4W 10K	8	
R33,34		ERDS2TJ223	C.RESISTOR 1/4W 22K	2	
R35		ERDS2TJ102	C.RESISTOR 1/4W 1K	1	
R36		ERDS2TJ474	C.RESISTOR 1/4W 470K	1	
R37		ERDS2TJ103	C.RESISTOR 1/4W 10K	1	
R38,39		ERDS2TJ223	C.RESISTOR 1/4W 22K	2	
R40		ERDS2TJ474	C.RESISTOR 1/4W 470K	1	
R41		ERDS2TJ103	C.RESISTOR 1/4W 10K	1	
R42		ERDS2TJ223	C.RESISTOR 1/4W 22K	1	
R45-48		ERDS2TJ103	C.RESISTOR 1/4W 10K	4	
R72,73		ERDS2TJ223	C.RESISTOR 1/4W 22K	2	
R101		ERDS2TJ682	C.RESISTOR 1/4W 6.8K	1	
R102,03		ERDS2TJ223	C.RESISTOR 1/4W 22K	2	
R104		ERDS2TJ221	C.RESISTOR 1/4W 220	1	
R105		ERDS2TJ222	C.RESISTOR 1/4W 2.2K	1	
R106,07		ERDS2TJ103	C.RESISTOR 1/4W 10K	2	
R108		ERDS2TJ682	C.RESISTOR 1/4W 6.8K	1	
R109,10		ERDS2TJ223	C.RESISTOR 1/4W 22K	2	
R111		ERDS2TJ221	C.RESISTOR 1/4W 220	1	
R112		ERDS2TJ222	C.RESISTOR 1/4W 2.2K	1	
R113,14		ERDS2TJ103	C.RESISTOR 1/4W 10K	2	
R115		ERDS2TJ682	C.RESISTOR 1/4W 6.8K	1	
R116,17		ERDS2TJ223	C.RESISTOR 1/4W 22K	2	
R118		ERDS2TJ221	C.RESISTOR 1/4W 220	1	
R119		ERDS2TJ222	C.RESISTOR 1/4W 2.2K	1	
R120,21		ERDS2TJ103	C.RESISTOR 1/4W 10K	2	
R122		ERDS2TJ682	C.RESISTOR 1/4W 6.8K	1	
R123,24		ERDS2TJ223	C.RESISTOR 1/4W 22K	2	
R125		ERDS2TJ221	C.RESISTOR 1/4W 220	1	
R126		ERDS2TJ222	C.RESISTOR 1/4W 2.2K	1	
R127-29		ERDS2TJ103	C.RESISTOR 1/4W 10K	3	
R130		ERDS2TJ102	C.RESISTOR 1/4W 1K	1	
R131		ERDS2TJ104	C.RESISTOR 1/4W 100K	1	
R132		ERDS2TJ102	C.RESISTOR 1/4W 1K	1	
R133		ERDS2TJ562	C.RESISTOR 1/4W 5.6K	1	
R134		ERDS2TJ104	C.RESISTOR 1/4W 100K	1	
R135		ERDS2TJ103	C.RESISTOR 1/4W 10K	1	
R136		ERDS2TJ102	C.RESISTOR 1/4W 1K	1	
R137		ERDS2TJ104	C.RESISTOR 1/4W 100K	1	
R138		ERDS2TJ102	C.RESISTOR 1/4W 1K	1	
R139		ERDS2TJ562	C.RESISTOR 1/4W 5.6K	1	
R140		ERDS2TJ104	C.RESISTOR 1/4W 100K	1	
RA1,A2		EXBF9E103J	COMBI.R-R 10K	2	
SW1-W3		VSS0119	SWITCH	3	
SW5		VSS0119	SWITCH	1	
SW7		VSS0119	SWITCH	1	
SW10		VSS0119	SWITCH	1	

Refer to the P.C.BOARDS LIST, page 6-1-1, before using this page.

Ref.No.		Part No.	Part Name & Description	Pcs	Remarks
VR8		EVUF2AE20B53	V.RESISTOR 5K	1	
VR9		VRV0109B502	V.RESISTOR 5K	1	
VR10,11		EVUF2AE20A14	V.RESISTOR 10K	2	
VR12,13		VRV0109B502	V.RESISTOR 5K	2	
VR101-04		VRV0110B203	V.RESISTOR 5K	4	
			MISCELLANEOUS		
		VMP2600	P.C.B. HOLDER ANGLE	1	
		XTV3+6F	SCREW	2	
	■	VEP80553C	P.C.BOARD W/COMPONENT		FOR AU-63-P
			FRONT INTERFACE		
			CAPACITORS		
C1-C9		ECKF1H103ZF	C.CAPACITOR 50V 0.01U	9	
C10,11		ECKF1H103ZF	C.CAPACITOR 50V 0.01U	2	
C13		ECKF1H103ZF	C.CAPACITOR 50V 0.01U	1	
C17-22		ECKF1H103ZF	C.CAPACITOR 50V 0.01U	6	
C23		ECQV1H104JZ	P.CAPACITOR 50V 0.1U	1	
C24		ECKF1H391KB	C.CAPACITOR 50V 390P	1	
C25		ECEA1CU101	E.CAPACITOR 16V 100U	1	
C26		ECKF1H103ZF	C.CAPACITOR 50V 0.01U	1	
C27		ECEA1CU101	E.CAPACITOR 16V 100U	1	
C28		ECKF1H103ZF	C.CAPACITOR 50V 0.01U	1	
C29		ECEA1CU330	E.CAPACITOR 16V 33U	1	
C30		ECKF1H103ZF	C.CAPACITOR 50V 0.01U	1	
C33-35		ECEA1CU101	E.CAPACITOR 16V 100U	3	
C101		ECQV1H274JZ	P.CAPACITOR 50V 0.27U	1	
C102		ECEA1CU100	E.CAPACITOR 16V 10U	1	
C103		ECEA1HU4R7	E.CAPACITOR 50V 4.7U	1	
C104		ECQV1H274JZ	P.CAPACITOR 50V 0.27U	1	
C105		ECEA1CU100	E.CAPACITOR 16V 10U	1	
C106		ECEA1HU4R7	E.CAPACITOR 50V 4.7U	1	
C107		ECQV1H274JZ	P.CAPACITOR 50V 0.27U	1	
C108		ECEA1CU100	E.CAPACITOR 16V 10U	1	
C109		ECEA1HU4R7	E.CAPACITOR 50V 4.7U	1	
C110		ECQV1H274JZ	P.CAPACITOR 50V 0.27U	1	
C111		ECEA1CU100	E.CAPACITOR 16V 10U	1	
C112		ECEA1HU4R7	E.CAPACITOR 50V 4.7U	1	
C113,14		ECEA1CBZ100	E.CAPACITOR 16V 10U	2	
C115-18		ECEA1CPZ101	E.CAPACITOR 16V 100U	4	
CN130		VJP1931T	CONNECTOR (MALE)	1	
CN131		VJP1239T	CONNECTOR(MALE) 12P	1	
CN132		VJP1237T	CONNECTOR(MALE) 10P	1	
CN133		VJP1237R	CONNECTOR(MALE) 10P	1	
CN134		VJP1931T	CONNECTOR (MALE)	1	
CN135		VJP1233T	CONNECTOR(MALE) 6P	1	
CN136		VJP1932T	CONNECTOR (MALE)	1	
CN137		VJP1232T	CONNECTOR(MALE) 5P	1	
CN138		VJP1237T	CONNECTOR(MALE) 10P	1	
CN139		VJP1234T	CONNECTOR(MALE) 7P	1	
D1		MA165	DIODE	1	
D5,D6		MA165	DIODE	2	
D101-08		OA95	DIODE	8	

Ref.No.		Part No.	Part Name & Description	Pcs	Remarks
IC1-C3		MC14053BCP	IC	3	
IC4,C5		MC14021BCP	IC	2	
IC6		MC14050BCP	IC	1	
IC7		AN78L12	IC	1	
IC8		AN79L12	IC	1	
IC9		AN79L05	IC	1	
IC101-03		NJM4558D	IC	3	
IC104		AN78L09	IC	1	
IC105		AN79L09	IC	1	
P150		VJP2891A020	CONNECTOR (MALE)	1	
Q1		UN1212	TRANSISTOR-RESISTOR	1	
Q101		2SD636	TRANSISTOR	1	
Q102		2SD1330	TRANSISTOR	1	
Q103		2SD636	TRANSISTOR	1	
Q104		2SD1330	TRANSISTOR	1	
Q105		2SD636	TRANSISTOR	1	
Q106		2SD1330	TRANSISTOR	1	
Q107		2SD636	TRANSISTOR	1	
Q108		2SD1330	TRANSISTOR	1	
			RESISTORS		
R7,R8		ERDS2TJ223	C.RESISTOR 1/4W 22K	2	
R9		ERDS2TJ103	C.RESISTOR 1/4W 10K	1	
R10-16		ERDS2TJ103	C.RESISTOR 1/4W 10K	7	
R25-32		ERDS2TJ103	C.RESISTOR 1/4W 10K	8	
R33,34		ERDS2TJ223	C.RESISTOR 1/4W 22K	2	
R35		ERDS2TJ102	C.RESISTOR 1/4W 1K	1	
R36		ERDS2TJ474	C.RESISTOR 1/4W 470K	1	
R37		ERDS2TJ103	C.RESISTOR 1/4W 10K	1	
R38,39		ERDS2TJ223	C.RESISTOR 1/4W 22K	2	
R40		ERDS2TJ474	C.RESISTOR 1/4W 470K	1	
R41		ERDS2TJ103	C.RESISTOR 1/4W 10K	1	
R42		ERDS2TJ223	C.RESISTOR 1/4W 22K	1	
R45-48		ERDS2TJ103	C.RESISTOR 1/4W 10K	4	
R72,73		ERDS2TJ223	C.RESISTOR 1/4W 22K	2	
R101		ERDS2TJ682	C.RESISTOR 1/4W 6.8K	1	
R102,03		ERDS2TJ223	C.RESISTOR 1/4W 22K	2	
R104		ERDS2TJ221	C.RESISTOR 1/4W 220	1	
R105		ERDS2TJ222	C.RESISTOR 1/4W 2.2K	1	
R106,07		ERDS2TJ103	C.RESISTOR 1/4W 10K	2	
R108		ERDS2TJ682	C.RESISTOR 1/4W 6.8K	1	
R109,10		ERDS2TJ223	C.RESISTOR 1/4W 22K	2	
R111		ERDS2TJ221	C.RESISTOR 1/4W 220	1	
R112		ERDS2TJ222	C.RESISTOR 1/4W 2.2K	1	
R113,14		ERDS2TJ103	C.RESISTOR 1/4W 10K	2	
R115		ERDS2TJ682	C.RESISTOR 1/4W 6.8K	1	
R116,17		ERDS2TJ223	C.RESISTOR 1/4W 22K	2	
R118		ERDS2TJ221	C.RESISTOR 1/4W 220	1	
R119		ERDS2TJ222	C.RESISTOR 1/4W 2.2K	1	
R120,21		ERDS2TJ103	C.RESISTOR 1/4W 10K	2	
R122		ERDS2TJ682	C.RESISTOR 1/4W 6.8K	1	
R123,24		ERDS2TJ223	C.RESISTOR 1/4W 22K	2	
R125		ERDS2TJ221	C.RESISTOR 1/4W 220	1	
R126		ERDS2TJ222	C.RESISTOR 1/4W 2.2K	1	
R127-29		ERDS2TJ103	C.RESISTOR 1/4W 10K	3	
R130		ERDS2TJ102	C.RESISTOR 1/4W 1K	1	
R131		ERDS2TJ104	C.RESISTOR 1/4W 100K	1	
R132		ERDS2TJ102	C.RESISTOR 1/4W 1K	1	
R133		ERDS2TJ562	C.RESISTOR 1/4W 5.6K	1	
R134		ERDS2TJ104	C.RESISTOR 1/4W 100K	1	
R135		ERDS2TJ103	C.RESISTOR 1/4W 10K	1	
R136		ERDS2TJ102	C.RESISTOR 1/4W 1K	1	
R137		ERDS2TJ104	C.RESISTOR 1/4W 100K	1	
R138		ERDS2TJ102	C.RESISTOR 1/4W 1K	1	

Refer to the P.C.BOARDS LIST, page 6-1-1, before using this page.

Ref.No.		Part No.	Part Name & Description	Pcs	Remarks
R139		ERDS2TJ562	C.RESISTOR 1/4W 5.6K	1	
R140		ERDS2TJ104	C.RESISTOR 1/4W 100K	1	
RA1,A2		EXBF9E103J	COMBI.R-R 10K	2	
SW1-W3		VSS0119	SWITCH	3	
SW5		VSS0119	SWITCH	1	
SW7		VSS0119	SWITCH	1	
SW10		VSS0119	SWITCH	1	
VR8		EVUF2AE20B53	V.RESISTOR 5K	1	
VR9		VRV0109B502	V.RESISTOR 5K	1	
VR10,11		EVUF2AE20A14	V.RESISTOR 10K	2	
VR12,13		VRV0109B502	V.RESISTOR 5K	2	
VR101-04		VRV0110B203	V.RESISTOR 5K	4	
			MISCELLANEOUS		
		VMP2600	P.C.B. HOLDER ANGLE	1	
		XTV3+6F	SCREW	2	
	■	VEP80631A	P.C.BOARD W/COMPONENT		FOR AU-65-E,B
			FRONT INTERFACE		
			CAPACITORS		
C1-C9		ECKF1H103ZF	C.CAPACITOR 50V 0.01U	9	
C10-22		ECKF1H103ZF	C.CAPACITOR 50V 0.01U	13	
C23		ECQV1H104JZ	P.CAPACITOR 50V 0.1U	1	
C24		ECKF1H391KB	C.CAPACITOR 50V 390P	1	
C25		ECEA1CU101	E.CAPACITOR 16V 100U	1	
C26		ECKF1H103ZF	C.CAPACITOR 50V 0.01U	1	
C27		ECEA1CU101	E.CAPACITOR 16V 100U	1	
C28		ECKF1H103ZF	C.CAPACITOR 50V 0.01U	1	
C29		ECEA1CU330	E.CAPACITOR 16V 33U	1	
C30		ECKF1H103ZF	C.CAPACITOR 50V 0.01U	1	
C33-35		ECEA1CU101	E.CAPACITOR 16V 100U	3	
C101		ECQV1H274JZ	P.CAPACITOR 50V 0.27U	1	
C102		ECEA1CU100	E.CAPACITOR 16V 10U	1	
C103		ECEA1HU4R7	E.CAPACITOR 50V 4.7U	1	
C104		ECQV1H274JZ	P.CAPACITOR 50V 0.27U	1	
C105		ECEA1CU100	E.CAPACITOR 16V 10U	1	
C106		ECEA1HU4R7	E.CAPACITOR 50V 4.7U	1	
C107		ECQV1H274JZ	P.CAPACITOR 50V 0.27U	1	
C108		ECEA1CU100	E.CAPACITOR 16V 10U	1	
C109		ECEA1HU4R7	E.CAPACITOR 50V 4.7U	1	
C110		ECQV1H274JZ	P.CAPACITOR 50V 0.27U	1	
C111		ECEA1CU100	E.CAPACITOR 16V 10U	1	
C112		ECEA1HU4R7	E.CAPACITOR 50V 4.7U	1	
C113,14		ECEA1CBZ100	E.CAPACITOR 16V 10U	2	
C115-18		ECEA1CPZ101	E.CAPACITOR 16V 100U	4	
CN130		VJP1931T	CONNECTOR(MALE)	1	
CN131		VJP1239T	CONNECTOR(MALE) 12P	1	
CN132		VJP1237T	CONNECTOR(MALE) 10P	1	
CN133		VJP1237R	CONNECTOR(MALE) 10P	1	
CN134		VJP1931T	CONNECTOR(MALE)	1	

Ref.No.		Part No.	Part Name & Description	Pcs	Remarks
CN135		VJP1233T	CONNECTOR(MALE) 6P	1	
CN136		VJP1932T	CONNECTOR(MALE)	1	
CN137		VJP1232T	CONNECTOR(MALE) 5P	1	
CN138		VJP1237T	CONNECTOR(MALE) 10P	1	
CN139		VJP1234T	CONNECTOR(MALE) 7P	1	
D1-D3		MA165	DIODE	3	
D5,D6		MA165	DIODE	2	
D101-08		0A95	DIODE	8	
IC1-C3		MC14053BCP	IC	3	
IC4,C5		MC14021BCP	IC	2	
IC6		MC14050BCP	IC	1	
IC7		AN78L12	IC	1	
IC8		AN79L12	IC	1	
IC9		AN79L05	IC	1	
IC101-03		NJM4558D	IC	3	
IC104		AN78L09	IC	1	
IC105		AN79L09	IC	1	
P150		VJP2891A020	CONNECTOR(MALE)	1	
Q1		UN1212	TRANSISTOR-RESISTOR	1	
Q2		UN1213	TRANSISTOR-RESISTOR	1	
Q3,Q4		2SD636	TRANSISTOR	2	
Q101		2SD636	TRANSISTOR	1	
Q102		2SD1330	TRANSISTOR	1	
Q103		2SD636	TRANSISTOR	1	
Q104		2SD1330	TRANSISTOR	1	
Q105		2SD636	TRANSISTOR	1	
Q106		2SD1330	TRANSISTOR	1	
Q107		2SD636	TRANSISTOR	1	
Q108		2SD1330	TRANSISTOR	1	
			RESISTORS		
R7,R8		ERDS2TJ223	C.RESISTOR 1/4W 22K	2	
R9		ERDS2TJ103	C.RESISTOR 1/4W 10K	1	
R10-16		ERDS2TJ103	C.RESISTOR 1/4W 10K	7	
R25-32		ERDS2TJ103	C.RESISTOR 1/4W 10K	8	
R33,34		ERDS2TJ223	C.RESISTOR 1/4W 22K	2	
R35		ERDS2TJ102	C.RESISTOR 1/4W 1K	1	
R36		ERDS2TJ474	C.RESISTOR 1/4W 470K	1	
R37		ERDS2TJ103	C.RESISTOR 1/4W 10K	1	
R38,39		ERDS2TJ223	C.RESISTOR 1/4W 22K	2	
R40		ERDS2TJ474	C.RESISTOR 1/4W 470K	1	
R41		ERDS2TJ103	C.RESISTOR 1/4W 10K	1	
R42		ERDS2TJ223	C.RESISTOR 1/4W 22K	1	
R45-48		ERDS2TJ103	C.RESISTOR 1/4W 10K	4	
R49,50		ERDS2TJ151	C.RESISTOR 1/4W 150	2	
R51,52		ERDS2TJ103	C.RESISTOR 1/4W 10K	2	
R53		ERDS2TJ473	C.RESISTOR 1/4W 47K	1	
R54,55		ERDS2TJ103	C.RESISTOR 1/4W 10K	2	
R56		ERDS2TJ473	C.RESISTOR 1/4W 47K	1	
R72,73		ERDS2TJ223	C.RESISTOR 1/4W 22K	2	
R101		ERDS2TJ682	C.RESISTOR 1/4W 6.8K	1	
R102,03		ERDS2TJ223	C.RESISTOR 1/4W 22K	2	
R104		ERDS2TJ221	C.RESISTOR 1/4W 220	1	
R105		ERDS2TJ222	C.RESISTOR 1/4W 2.2K	1	
R106,07		ERDS2TJ103	C.RESISTOR 1/4W 10K	2	
R108		ERDS2TJ682	C.RESISTOR 1/4W 6.8K	1	
R109,10		ERDS2TJ223	C.RESISTOR 1/4W 22K	2	
R111		ERDS2TJ221	C.RESISTOR 1/4W 220	1	
R112		ERDS2TJ222	C.RESISTOR 1/4W 2.2K	1	
R113,14		ERDS2TJ103	C.RESISTOR 1/4W 10K	2	
R115		ERDS2TJ682	C.RESISTOR 1/4W 6.8K	1	

Refer to the P.C.BOARDS LIST, page 6-1-1, before using this page.

Ref.No.		Part No.	Part Name & Description	Pcs	Remarks
R116,17		ERDS2TJ223	C.RESISTOR 1/4W 22K	2	
R118		ERDS2TJ221	C.RESISTOR 1/4W 220	1	
R119		ERDS2TJ222	C.RESISTOR 1/4W 2.2K	1	
R120,21		ERDS2TJ103	C.RESISTOR 1/4W 10K	2	
R122		ERDS2TJ682	C.RESISTOR 1/4W 6.8K	1	
R123,24		ERDS2TJ223	C.RESISTOR 1/4W 22K	2	
R125		ERDS2TJ221	C.RESISTOR 1/4W 220	1	
R126		ERDS2TJ222	C.RESISTOR 1/4W 2.2K	1	
R127-29		ERDS2TJ103	C.RESISTOR 1/4W 10K	3	
R130		ERDS2TJ102	C.RESISTOR 1/4W 1K	1	
R131		ERDS2TJ104	C.RESISTOR 1/4W 100K	1	
R132		ERDS2TJ102	C.RESISTOR 1/4W 1K	1	
R133		ERDS2TJ562	C.RESISTOR 1/4W 5.6K	1	
R134		ERDS2TJ104	C.RESISTOR 1/4W 100K	1	
R135		ERDS2TJ103	C.RESISTOR 1/4W 10K	1	
R136		ERDS2TJ102	C.RESISTOR 1/4W 1K	1	
R137		ERDS2TJ104	C.RESISTOR 1/4W 100K	1	
R138		ERDS2TJ102	C.RESISTOR 1/4W 1K	1	
R139		ERDS2TJ562	C.RESISTOR 1/4W 5.6K	1	
R140		ERDS2TJ104	C.RESISTOR 1/4W 100K	1	
RA1,A2		EXBF9E103J	COMBI.R-R 10K	2	
SW1-W5		VSS0119	SWITCH	5	
SW6,W7		VSS0243	SWITCH	2	
SW8,W9		VSS0119	SWITCH	2	
SW10,11		VSS0119	SWITCH	2	
VR8		EVUF2AE20B53	V.RESISTOR 5K	1	
VR9		VRV0109B502	V.RESISTOR 5K	1	
VR10,11		EVUF2AE20A14	V.RESISTOR 10K	2	
VR12,13		VRV0109B502	V.RESISTOR 5K	2	
VR101-04		VRV0110B203	V.RESISTOR 5K	4	
			MISCELLANEOUS		
		VMP2600	P.C.B. HOLDER ANGLE	1	
		XTV3+6F	SCREW	2	
	■	VEP80631B	P.C.BOARD W/COMPONENT		FOR AU-63-E,B
			FRONT INTERFACE		
			CAPACITORS		
C1-C9		ECKF1H103ZF	C.CAPACITOR 50V 0.01U	9	
C10,11		ECKF1H103ZF	C.CAPACITOR 50V 0.01U	2	
C13		ECKF1H103ZF	C.CAPACITOR 50V 0.01U	1	
C17-22		ECKF1H103ZF	C.CAPACITOR 50V 0.01U	6	
C23		ECQV1H104JZ	P.CAPACITOR 50V 0.1U	1	
C24		ECKF1H391KB	C.CAPACITOR 50V 390P	1	
C25		ECEA1CU101	E.CAPACITOR 16V 100U	1	
C26		ECKF1H103ZF	C.CAPACITOR 50V 0.01U	1	
C27		ECEA1CU101	E.CAPACITOR 16V 100U	1	
C28		ECKF1H103ZF	C.CAPACITOR 50V 0.01U	1	
C29		ECEA1CU330	E.CAPACITOR 16V 33U	1	
C30		ECKF1H103ZF	C.CAPACITOR 50V 0.01U	1	
C33-35		ECEA1CU101	E.CAPACITOR 16V 100U	3	
C101		ECQV1H274JZ	P.CAPACITOR 50V 0.27U	1	
C102		ECEA1CU100	E.CAPACITOR 16V 10U	1	

Ref.No.		Part No.	Part Name & Description	Pcs	Remarks
C103		ECEA1HU4R7	E.CAPACITOR 50V 4.7U	1	
C104		ECQV1H274JZ	P.CAPACITOR 50V 0.27U	1	
C105		ECEA1CU100	E.CAPACITOR 16V 10U	1	
C106		ECEA1HU4R7	E.CAPACITOR 50V 4.7U	1	
C107		ECQV1H274JZ	P.CAPACITOR 50V 0.27U	1	
C108		ECEA1CU100	E.CAPACITOR 16V 10U	1	
C109		ECEA1HU4R7	E.CAPACITOR 50V 4.7U	1	
C110		ECQV1H274JZ	P.CAPACITOR 50V 0.27U	1	
C111		ECEA1CU100	E.CAPACITOR 16V 10U	1	
C112		ECEA1HU4R7	E.CAPACITOR 50V 4.7U	1	
C113,14		ECEA1CBZ100	E.CAPACITOR 16V 10U	2	
C115-18		ECEA1CPZ101	E.CAPACITOR 16V 100U	4	
CN130		VJP1931T	CONNECTOR(MALE)	1	
CN131		VJP1239T	CONNECTOR(MALE) 12P	1	
CN132		VJP1237T	CONNECTOR(MALE) 10P	1	
CN133		VJP1237R	CONNECTOR(MALE) 10P	1	
CN134		VJP1931T	CONNECTOR(MALE)	1	
CN135		VJP1233T	CONNECTOR(MALE) 6P	1	
CN136		VJP1932T	CONNECTOR(MALE)	1	
CN137		VJP1232T	CONNECTOR(MALE) 5P	1	
CN138		VJP1237T	CONNECTOR(MALE) 10P	1	
CN139		VJP1234T	CONNECTOR(MALE) 7P	1	
D5,D6		MA165	DIODE	2	
D101-08		0A95	DIODE	8	
IC1-C3		MC14053BCP	IC	3	
IC4,C5		MC14021BCP	IC	2	
IC6		MC14050BCP	IC	1	
IC7		AN78L12	IC	1	
IC8		AN79L12	IC	1	
IC9		AN79L05	IC	1	
IC101-03		NJM4558D	IC	3	
IC104		AN78L09	IC	1	
IC105		AN79L09	IC	1	
P150		VJP2891A020	CONNECTOR(MALE)	1	
Q1		UN1212	TRANSISTOR-RESISTOR	1	
Q101		2SD636	TRANSISTOR	1	
Q102		2SD1330	TRANSISTOR	1	
Q103		2SD636	TRANSISTOR	1	
Q104		2SD1330	TRANSISTOR	1	
Q105		2SD636	TRANSISTOR	1	
Q106		2SD1330	TRANSISTOR	1	
Q107		2SD636	TRANSISTOR	1	
Q108		2SD1330	TRANSISTOR	1	
			RESISTORS		
R7,R8		ERDS2TJ223	C.RESISTOR 1/4W 22K	2	
R9		ERDS2TJ103	C.RESISTOR 1/4W 10K	1	
R10-16		ERDS2TJ103	C.RESISTOR 1/4W 10K	7	
R25-32		ERDS2TJ103	C.RESISTOR 1/4W 10K	8	
R33,34		ERDS2TJ223	C.RESISTOR 1/4W 22K	2	
R35		ERDS2TJ102	C.RESISTOR 1/4W 1K	1	
R36		ERDS2TJ474	C.RESISTOR 1/4W 470K	1	
R37		ERDS2TJ103	C.RESISTOR 1/4W 10K	1	
R38,39		ERDS2TJ223	C.RESISTOR 1/4W 22K	2	
R40		ERDS2TJ474	C.RESISTOR 1/4W 470K	1	
R41		ERDS2TJ103	C.RESISTOR 1/4W 10K	1	
R42		ERDS2TJ223	C.RESISTOR 1/4W 22K	1	
R45-48		ERDS2TJ103	C.RESISTOR 1/4W 10K	4	

Refer to the P.C.BOARDS LIST, page 6-1-1, before using this page.

Ref.No.		Part No.	Part Name & Description	Pcs	Remarks
R72,73		ERDS2TJ223	C.RESISTOR 1/4W 22K	2	
R101		ERDS2TJ682	C.RESISTOR 1/4W 6.8K	1	
R102,03		ERDS2TJ223	C.RESISTOR 1/4W 22K	2	
R104		ERDS2TJ221	C.RESISTOR 1/4W 220	1	
R105		ERDS2TJ222	C.RESISTOR 1/4W 2.2K	1	
R106,07		ERDS2TJ103	C.RESISTOR 1/4W 10K	2	
R108		ERDS2TJ682	C.RESISTOR 1/4W 6.8K	1	
R109,10		ERDS2TJ223	C.RESISTOR 1/4W 22K	2	
R111		ERDS2TJ221	C.RESISTOR 1/4W 220	1	
R112		ERDS2TJ222	C.RESISTOR 1/4W 2.2K	1	
R113,14		ERDS2TJ103	C.RESISTOR 1/4W 10K	2	
R115		ERDS2TJ682	C.RESISTOR 1/4W 6.8K	1	
R116,17		ERDS2TJ223	C.RESISTOR 1/4W 22K	2	
R118		ERDS2TJ221	C.RESISTOR 1/4W 220	1	
R119		ERDS2TJ222	C.RESISTOR 1/4W 2.2K	1	
R120,21		ERDS2TJ103	C.RESISTOR 1/4W 10K	2	
R122		ERDS2TJ682	C.RESISTOR 1/4W 6.8K	1	
R123,24		ERDS2TJ223	C.RESISTOR 1/4W 22K	2	
R125		ERDS2TJ221	C.RESISTOR 1/4W 220	1	
R126		ERDS2TJ222	C.RESISTOR 1/4W 2.2K	1	
R127-29		ERDS2TJ103	C.RESISTOR 1/4W 10K	3	
R130		ERDS2TJ102	C.RESISTOR 1/4W 1K	1	
R131		ERDS2TJ104	C.RESISTOR 1/4W 100K	1	
R132		ERDS2TJ102	C.RESISTOR 1/4W 1K	1	
R133		ERDS2TJ562	C.RESISTOR 1/4W 5.6K	1	
R134		ERDS2TJ104	C.RESISTOR 1/4W 100K	1	
R135		ERDS2TJ103	C.RESISTOR 1/4W 10K	1	
R136		ERDS2TJ102	C.RESISTOR 1/4W 1K	1	
R137		ERDS2TJ104	C.RESISTOR 1/4W 100K	1	
R138		ERDS2TJ102	C.RESISTOR 1/4W 1K	1	
R139		ERDS2TJ562	C.RESISTOR 1/4W 5.6K	1	
R140		ERDS2TJ104	C.RESISTOR 1/4W 100K	1	
RA1,A2		EXBF9E103J	COMBI.R-R 10K	2	
SW1-W3		VSS0119	SWITCH	3	
SW5		VSS0119	SWITCH	1	
SW7		VSS0243	SWITCH	1	
SW10		VSS0119	SWITCH	1	
VR8		EVUF2AE20B53	V.RESISTOR 5K	1	
VR9		VRV0109B502	V.RESISTOR 5K	1	
VR10,11		EVUF2AE20A14	V.RESISTOR 10K	2	
VR12,13		VRV0109B502	V.RESISTOR 5K	2	
VR101-04		VRV0110B203	V.RESISTOR 5K	4	
			MISCELLANEOUS		
		VMP2600	P.C.B. HOLDER ANGLE	1	
		XTV3+6F	SCREW	2	
	■	VEP80631C	P.C.BOARD W/COMPONENT		FOR AU-62-E,B
			FRONT INTERFACE		
			CAPACITORS		
C1-C9		ECKF1H1032F	C.CAPACITOR 50V 0.01U	9	
C10,11		ECKF1H1032F	C.CAPACITOR 50V 0.01U	2	
C13		ECKF1H1032F	C.CAPACITOR 50V 0.01U	1	

Ref.No.		Part No.	Part Name & Description	Pcs	Remarks
C15		ECKF1H1032F	C.CAPACITOR 50V 0.01U	1	
C17-22		ECKF1H1032F	C.CAPACITOR 50V 0.01U	6	
C23		ECQV1H104JZ	P.CAPACITOR 50V 0.1U	1	
C24		ECKF1H391KB	C.CAPACITOR 50V 390P	1	
C25		ECEA1CU101	E.CAPACITOR 16V 100U	1	
C26		ECKF1H1032F	C.CAPACITOR 50V 0.01U	1	
C27		ECEA1CU101	E.CAPACITOR 16V 100U	1	
C28		ECKF1H1032F	C.CAPACITOR 50V 0.01U	1	
C29		ECEA1CU330	E.CAPACITOR 16V 33U	1	
C30		ECKF1H1032F	C.CAPACITOR 50V 0.01U	1	
C33-35		ECEA1CU101	E.CAPACITOR 16V 100U	3	
C101		ECQV1H274JZ	P.CAPACITOR 50V 0.27U	1	
C102		ECEA1CU100	E.CAPACITOR 16V 10U	1	
C103		ECEA1HU4R7	E.CAPACITOR 50V 4.7U	1	
C104		ECQV1H274JZ	P.CAPACITOR 50V 0.27U	1	
C105		ECEA1CU100	E.CAPACITOR 16V 10U	1	
C106		ECEA1HU4R7	E.CAPACITOR 50V 4.7U	1	
C107		ECQV1H274JZ	P.CAPACITOR 50V 0.27U	1	
C108		ECEA1CU100	E.CAPACITOR 16V 10U	1	
C109		ECEA1HU4R7	E.CAPACITOR 50V 4.7U	1	
C110		ECQV1H274JZ	P.CAPACITOR 50V 0.27U	1	
C111		ECEA1CU100	E.CAPACITOR 16V 10U	1	
C112		ECEA1HU4R7	E.CAPACITOR 50V 4.7U	1	
C113,14		ECEA1CB2100	E.CAPACITOR 16V 10U	2	
C115-18		ECEA1CPZ101	E.CAPACITOR 16V 100U	4	
CN130		VJP1931T	CONNECTOR(MALE)	1	
CN131		VJP1239T	CONNECTOR(MALE) 12P	1	
CN132		VJP1237T	CONNECTOR(MALE) 10P	1	
CN133		VJP1237R	CONNECTOR(MALE) 10P	1	
CN134		VJP1931T	CONNECTOR(MALE)	1	
CN135		VJP1233T	CONNECTOR(MALE) 6P	1	
CN136		VJP1932T	CONNECTOR(MALE)	1	
CN137		VJP1232T	CONNECTOR(MALE) 5P	1	
CN138		VJP1237T	CONNECTOR(MALE) 10P	1	
CN139		VJP1234T	CONNECTOR(MALE) 7P	1	
D6		MA165	DIODE	1	
D101-08		0A95	DIODE	8	
IC1-C3		MC14053BCP	IC	3	
IC4,C5		MC14021BCP	IC	2	
IC6		MC14050BCP	IC	1	
IC7		AN78L12	IC	1	
IC8		AN79L12	IC	1	
IC9		AN79L05	IC	1	
IC101-03		NJM4558D	IC	3	
IC104		AN78L09	IC	1	
IC105		AN79L09	IC	1	
P150		VJP2891A020	CONNECTOR(MALE)	1	
Q1		UN1212	TRANSISTOR-RESISTOR	1	
Q101		2SD636	TRANSISTOR	1	
Q102		2SD1330	TRANSISTOR	1	
Q103		2SD636	TRANSISTOR	1	
Q104		2SD1330	TRANSISTOR	1	
Q105		2SD636	TRANSISTOR	1	
Q106		2SD1330	TRANSISTOR	1	
Q107		2SD636	TRANSISTOR	1	
Q108		2SD1330	TRANSISTOR	1	
			RESISTORS		

Refer to the P.C.BOARDS LIST, page 6-1-1, before using this page.

Ref.No.		Part No.	Part Name & Description	Pcs	Remarks
R7,R8		ERDS2TJ223	C.RESISTOR 1/4W 22K	2	
R9		ERDS2TJ103	C.RESISTOR 1/4W 10K	1	
R10-16		ERDS2TJ103	C.RESISTOR 1/4W 10K	7	
R25-32		ERDS2TJ103	C.RESISTOR 1/4W 10K	8	
R33,34		ERDS2TJ223	C.RESISTOR 1/4W 22K	2	
R35		ERDS2TJ102	C.RESISTOR 1/4W 1K	1	
R36		ERDS2TJ474	C.RESISTOR 1/4W 470K	1	
R37		ERDS2TJ103	C.RESISTOR 1/4W 10K	1	
R38,39		ERDS2TJ223	C.RESISTOR 1/4W 22K	2	
R40		ERDS2TJ474	C.RESISTOR 1/4W 470K	1	
R41		ERDS2TJ103	C.RESISTOR 1/4W 10K	1	
R42		ERDS2TJ223	C.RESISTOR 1/4W 22K	1	
R45-48		ERDS2TJ103	C.RESISTOR 1/4W 10K	4	
R72,73		ERDS2TJ223	C.RESISTOR 1/4W 22K	2	
R101		ERDS2TJ682	C.RESISTOR 1/4W 6.8K	1	
R102,03		ERDS2TJ223	C.RESISTOR 1/4W 22K	2	
R104		ERDS2TJ221	C.RESISTOR 1/4W 220	1	
R105		ERDS2TJ222	C.RESISTOR 1/4W 2.2K	1	
R106,07		ERDS2TJ103	C.RESISTOR 1/4W 10K	2	
R108		ERDS2TJ682	C.RESISTOR 1/4W 6.8K	1	
R109,10		ERDS2TJ223	C.RESISTOR 1/4W 22K	2	
R111		ERDS2TJ221	C.RESISTOR 1/4W 220	1	
R112		ERDS2TJ222	C.RESISTOR 1/4W 2.2K	1	
R113,14		ERDS2TJ103	C.RESISTOR 1/4W 10K	2	
R115		ERDS2TJ682	C.RESISTOR 1/4W 6.8K	1	
R116,17		ERDS2TJ223	C.RESISTOR 1/4W 22K	2	
R118		ERDS2TJ221	C.RESISTOR 1/4W 220	1	
R119		ERDS2TJ222	C.RESISTOR 1/4W 2.2K	1	
R120,21		ERDS2TJ103	C.RESISTOR 1/4W 10K	2	
R122		ERDS2TJ682	C.RESISTOR 1/4W 6.8K	1	
R123,24		ERDS2TJ223	C.RESISTOR 1/4W 22K	2	
R125		ERDS2TJ221	C.RESISTOR 1/4W 220	1	
R126		ERDS2TJ222	C.RESISTOR 1/4W 2.2K	1	
R127-29		ERDS2TJ103	C.RESISTOR 1/4W 10K	3	
R130		ERDS2TJ102	C.RESISTOR 1/4W 1K	1	
R131		ERDS2TJ104	C.RESISTOR 1/4W 100K	1	
R132		ERDS2TJ102	C.RESISTOR 1/4W 1K	1	
R133		ERDS2TJ562	C.RESISTOR 1/4W 5.6K	1	
R134		ERDS2TJ104	C.RESISTOR 1/4W 100K	1	
R135		ERDS2TJ103	C.RESISTOR 1/4W 10K	1	
R136		ERDS2TJ102	C.RESISTOR 1/4W 1K	1	
R137		ERDS2TJ104	C.RESISTOR 1/4W 100K	1	
R138		ERDS2TJ102	C.RESISTOR 1/4W 1K	1	
R139		ERDS2TJ562	C.RESISTOR 1/4W 5.6K	1	
R140		ERDS2TJ104	C.RESISTOR 1/4W 100K	1	
RA1,A2		EXBF9E103J	COMBI.R-R 10K	2	
SW1-W3		VSS0119	SWITCH	3	
SW5		VSS0119	SWITCH	1	
SW7		VSS0243	SWITCH	1	
SW10		VSS0119	SWITCH	1	
VR8		EVUF2AE20B53	V.RESISTOR 5K	1	
VR9		VRV0109B502	V.RESISTOR 5K	1	
VR10,11		EVUF2AE20A14	V.RESISTOR 10K	2	
VR12,13		VRV0109B502	V.RESISTOR 5K	2	
VR101-04		VRV0110B203	V.RESISTOR 5K	4	
			MISCELLANEOUS		
		VMP2600	P.C.B. HOLDER ANGLE	1	
		XTV3+6F	SCREW	2	

Ref.No.		Part No.	Part Name & Description	Pcs	Remarks
	■	VEP80440A	P.C.BOARD W/COMPONENT		
			FRONT LOADING		
			MISCELLANEOUS		
		VJP1154	CONNECTOR (MALE)	1	
		VJP1246T	CONNECTOR (MALE)	1	
		VJP1249T	CONNECTOR (MALE)	1	
	■	VEP80559A	P.C.BOARD W/COMPONENT		FOR AU-65-P,E,B
			FRONT MODE SELECT CIRCUIT		
			CAPACITORS		
C1-C4		ECEA1CKG470	E.CAPACITOR 16V 47U	4	
CN180		VJP1237T	CONNECTOR(MALE) 10P	1	
CN181		VJP1511T	CONNECTOR(MALE)	1	
D1-D4		VLL0047	DIODE	4	
IC1		UPC4557C	IC	1	
P153		VJP1144	CONNECTOR (MALE)	1	
P155		VJP1143	CONNECTOR(MALE)	1	
Q1,Q2		2SB641	TRANSISTOR	2	(Q,R)
Q3		2SD638	TRANSISTOR	1	(Q,R)
Q4		2SB643	TRANSISTOR	1	(Q,R)
			RESISTORS		
R1,R2		ERDS2TJ331	C.RESISTOR 1/4W 330	2	
R3		ERDS2TJ332	C.RESISTOR 1/4W 3.3K	1	
R4		ERDS2TJ153	C.RESISTOR 1/4W 15K	1	
R5		ERDS2TJ332	C.RESISTOR 1/4W 3.3K	1	
R6		ERDS2TJ153	C.RESISTOR 1/4W 15K	1	
R7,R8		ERDS2TJ560	C.RESISTOR 1/4W 56	2	
R9		ERDS2TJ562	C.RESISTOR 1/4W 5.6K	1	
R10,11		ERDS2TJ473	C.RESISTOR 1/4W 47K	2	
R12		ERDS2TJ562	C.RESISTOR 1/4W 5.6K	1	
R13,14		ERDS2TJ151	C.RESISTOR 1/4W 150	2	
SW1		VST0079	SWITCH	1	
SW2,W3		VST0080	SWITCH	2	
SW5,W6		VST0080	SWITCH	2	
			MISCELLANEOUS		
		VMX1858	SPACER	4	

Refer to the P.C.BOARDS LIST, page 6-1-1, before using this page.

Ref.No.		Part No.	Part Name & Description	Pcs	Remarks
	■	VEP80559C	P.C.BOARD W/COMPONENT		FOR AU-62-P,E,B
			FRONT MODE SELECT CIRCUIT		
			CAPACITORS		
C1-C4		ECEA1CKG470	E.CAPACITOR 16V 47U	4	
CN180		VJP1237T	CONNECTOR(MALE) 10P	1	
CN181		VJP1511T	CONNECTOR(MALE)	1	
D1,D2		VLL0047	DIODE	2	
IC1		UPC4557C	IC	1	
P153		VJP1144	CONNECTOR(MALE)	1	
P155		VJP1143	CONNECTOR(MALE)	1	
Q1,Q2		2SB641	TRANSISTOR	2	(Q,R)
Q3		2SD638	TRANSISTOR	1	(Q,R)
Q4		2SB643	TRANSISTOR	1	(Q,R)
			RESISTORS		
R1,R2		ERDS2TJ331	C.RESISTOR 1/4W 330	2	
R3		ERDS2TJ332	C.RESISTOR 1/4W 3.3K	1	
R4		ERDS2TJ153	C.RESISTOR 1/4W 15K	1	
R5		ERDS2TJ332	C.RESISTOR 1/4W 3.3K	1	
R6		ERDS2TJ153	C.RESISTOR 1/4W 15K	1	
R7,R8		ERDS2TJ560	C.RESISTOR 1/4W 56	2	
R9		ERDS2TJ562	C.RESISTOR 1/4W 5.6K	1	
R10,11		ERDS2TJ473	C.RESISTOR 1/4W 47K	2	
R12		ERDS2TJ562	C.RESISTOR 1/4W 5.6K	1	
R13,14		ERDS2TJ151	C.RESISTOR 1/4W 150	2	
SW1		VST0079	SWITCH	1	
SW2		VST0080	SWITCH	1	
SW6		VST0080	SWITCH	1	
			MISCELLANEOUS		
		VMX1858	COLOR SPACER	2	
	■	VEP80559D	P.C.BOARD W/COMPONENT		FOR AU-63-P,E,B
			FRONT MODE SELECT CIRCUIT		

Ref.No.		Part No.	Part Name & Description	Pcs	Remarks
			CAPACITORS		
C1-C4		ECEA1CKG470	E.CAPACITOR 16V 47U	4	
CN180		VJP1237T	CONNECTOR(MALE) 10P	1	
CN181		VJP1511T	CONNECTOR(MALE)	1	
D1,D2		VLL0047	DIODE	2	
IC1		UPC4557C	IC	1	
P153		VJP1144	CONNECTOR(MALE)	1	
P155		VJP1143	CONNECTOR(MALE)	1	
Q1,Q2		2SB641	TRANSISTOR	2	(Q,R)
Q3		2SD638	TRANSISTOR	1	(Q,R)
Q4		2SB643	TRANSISTOR	1	(Q,R)
			RESISTORS		
R1,R2		ERDS2TJ331	C.RESISTOR 1/4W 330	2	
R3		ERDS2TJ332	C.RESISTOR 1/4W 3.3K	1	
R4		ERDS2TJ153	C.RESISTOR 1/4W 15K	1	
R5		ERDS2TJ332	C.RESISTOR 1/4W 3.3K	1	
R6		ERDS2TJ153	C.RESISTOR 1/4W 15K	1	
R7,R8		ERDS2TJ560	C.RESISTOR 1/4W 56	2	
R9		ERDS2TJ562	C.RESISTOR 1/4W 5.6K	1	
R10,11		ERDS2TJ473	C.RESISTOR 1/4W 47K	2	
R12		ERDS2TJ562	C.RESISTOR 1/4W 5.6K	1	
R13,14		ERDS2TJ151	C.RESISTOR 1/4W 150	2	
SW1		VST0079	SWITCH	1	
SW2		VST0080	SWITCH	1	
SW5,W6		VST0080	SWITCH	2	
			MISCELLANEOUS		
		VMX1858	COLOR SPACER	2	
	■	VEP86050C	P.C.BOARD W/COMPONENT		FOR AU-65-P
			FRONT A		
			CAPACITORS		
C1-C8		ECKF1H103ZF	C.CAPACITOR 50V 0.01U	8	
C9		ECEA1AU221	E.CAPACITOR 10V 220U	1	
D1-D9		MA165	DIODE	9	

Refer to the P.C.BOARDS LIST, page 6-1-1, before using this page.

Ref.No.		Part No.	Part Name & Description	Pcs	Remarks
D10-42		MA165	DIODE	33	
IC1		MC74HC138AF	IC	1	
IC2-C8		MC74HC374F	IC	7	
IC9		M54514AP	IC	1	
IC10-15		M54514AP	IC	6	
J2,J3		VJP1239T	CONNECTOR(MALE) 12P	2	
J4		VJP1237T	CONNECTOR(MALE) 10P	1	
LED1		LN217RP	LED	1	
LED2		EBG5504S	LED	1	
LED3		VLL0032	LED	1	
LED4-D9		LN317GPU	DIODE	6	
LED10-19		LN317GPU	DIODE	10	
LED20-23		PY3668S	LED	4	
LED24-28		EBG5504S	LED	5	
LED29-31		VLL0032	LED	3	
Q1,Q2		2SB643	TRANSISTOR	2	
Q3		DTC114EA	TRANSISTOR RESISTOR	1	
			RESISTORS		
R1		ERDS2TJ103	C.RESISTOR 1/4W 10K	1	
R2		ERDS2TJ102	C.RESISTOR 1/4W 1K	1	
R3		ERDS2TJ103	C.RESISTOR 1/4W 10K	1	
R4		ERDS2TJ102	C.RESISTOR 1/4W 1K	1	
R5		ERDS2TJ391	C.RESISTOR 1/4W 390	1	
R6-R8		ERDS2TJ151	C.RESISTOR 1/4W 150	3	
R9		ERDS2TJ391	C.RESISTOR 1/4W 390	1	
R10,11		ERDS2TJ151	C.RESISTOR 1/4W 150	2	
R12,13		ERDS2TJ391	C.RESISTOR 1/4W 390	2	
R14-16		ERDS2TJ151	C.RESISTOR 1/4W 150	3	
R17-21		ERDS2TJ391	C.RESISTOR 1/4W 390	5	
RA1,A2		EXBC44151J	COMBI.R-R 150	2	
RA3,A4		EXBC44391J	COMBI.R-R 390	2	
RA5,A6		EXBC44151J	COMBI.R-R 150	2	
RA8,A9		EXBC44391J	COMBI.R-R 390	2	
SW1		VSP0199	SWITCH	1	
SW2,W3		EVQQJ104K	SWITCH	2	
SW4		VSP0198	SWITCH	1	
SW5		VSP0193	SWITCH	1	
SW6		VSP0194	SWITCH	1	
SW7		VSP0195	SWITCH	1	
SW8		VSP0224	SWITCH	1	
SW9		VSP0279	SWITCH	1	
SW10		VSP0223	SWITCH	1	
SW11		VSP0199	SWITCH	1	
SW12,13		VSP0473	SWITCH	2	
SW14,15		VSP0198	SWITCH	2	
SW16		VSP0473	SWITCH	1	
SW17-19		VSP0199	SWITCH	3	
SW20-23		EVQQJ104K	SWITCH	4	
SW24,25		VSP0363		2	
SW26,27		EVQQJ104K	SWITCH	2	
SW28		VSP0199	SWITCH	1	
SW29		VSP0198	SWITCH	1	
SW30		VSP0204	SWITCH	1	
SW31,32		VSP0198	SWITCH	2	

Ref.No.		Part No.	Part Name & Description	Pcs	Remarks
SW33		VSP0239	SWITCH	1	
SW34		VSP0225	SWITCH	1	
SW35-37		EVQQ8B11K	SWITCH	3	
SW38-40		EVQQ8R13K	SWITCH	3	
SW41-44		VSS0172	SWITCH	4	
			MISCELLANEOUS		
		VMX0473	SPACER	10	
		VMZ0829	BARRIER	1	
	■	VEP86050D	P.C.BOARD W/COMPONENT		FOR AU-65-E,B
			FRONT PANEL A		
			CAPACITORS		
C1-C8		ECKF1H103ZF	C.CAPACITOR 50V 0.01U	8	
C9		ECEA1AU221	E.CAPACITOR 10V 220U	1	
D1-D9		MA165	DIODE	9	
D10-42		MA165	DIODE	33	
IC1		MC74HC138AF	IC	1	
IC2-C8		MC74HC374F	IC	7	
IC9		M54514AP	IC	1	
IC10-15		M54514AP	IC	6	
J2,J3		VJP1239T	CONNECTOR(MALE) 12P	2	
J4		VJP1237T	CONNECTOR(MALE) 10P	1	
LED1		LN217RP	LED	1	
LED2		EBG5504S	LED	1	
LED3		VLL0032	LED	1	
LED4-D9		LN317GPU	DIODE	6	
LED10-19		LN317GPU	DIODE	10	
LED20-23		PY3668S	LED	4	
LED24-28		EBG5504S	LED	5	
LED29-31		VLL0032	LED	3	
Q1,Q2		2SB643	TRANSISTOR	2	
Q3		DTC114EA	TRANSISTOR RESISTOR	1	
			RESISTORS		
R1		ERDS2TJ103	C.RESISTOR 1/4W 10K	1	
R2		ERDS2TJ102	C.RESISTOR 1/4W 1K	1	
R3		ERDS2TJ103	C.RESISTOR 1/4W 10K	1	
R4		ERDS2TJ102	C.RESISTOR 1/4W 1K	1	
R5		ERDS2TJ391	C.RESISTOR 1/4W 390	1	
R6-R8		ERDS2TJ151	C.RESISTOR 1/4W 150	3	
R9		ERDS2TJ391	C.RESISTOR 1/4W 390	1	
R10,11		ERDS2TJ151	C.RESISTOR 1/4W 150	2	
R12,13		ERDS2TJ391	C.RESISTOR 1/4W 390	2	
R14-16		ERDS2TJ151	C.RESISTOR 1/4W 150	3	

Refer to the P.C.BOARDS LIST, page 6-1-1, before using this page.

Ref.No.		Part No.	Part Name & Description	Pcs	Remarks
R17-21		ERDS2TJ391	C.RESISTOR 1/4W 390	5	
RA1,A2		EXBC44151J	COMBI.R-R 150	2	
RA3,A4		EXBC44391J	COMBI.R-R 390	2	
RA5,A6		EXBC44151J	COMBI.R-R 150	2	
RA8,A9		EXBC44391J	COMBI.R-R 390	2	
SW1		VSP0199	SWITCH	1	
SW2,W3		EVQQJ104K	SWITCH	2	
SW4		VSP0198	SWITCH	1	
SW5		VSP0193	SWITCH	1	
SW6		VSP0194	SWITCH	1	
SW7		VSP0195	SWITCH	1	
SW8		VSP0224	SWITCH	1	
SW9		VSP0279	SWITCH	1	
SW10		VSP0223	SWITCH	1	
SW11		VSP0199	SWITCH	1	
SW12,13		VSP0473	SWITCH	2	
SW14,15		VSP0198	SWITCH	2	
SW16		VSP0473	SWITCH	1	
SW17-19		VSP0199	SWITCH	3	
SW20-23		EVQQJ104K	SWITCH	4	
SW24,25		VSP0363	SWITCH	2	
SW26,27		EVQQJ104K	SWITCH	2	
SW28		VSP0199	SWITCH	1	
SW29		VSP0198	SWITCH	1	
SW30		VSP0204	SWITCH	1	
SW31,32		VSP0198	SWITCH	2	
SW33		VSP0239	SWITCH	1	
SW34		VSP0225	SWITCH	1	
SW35-37		EVQQ8B11K	SWITCH	3	
SW38-40		EVQQ8R13K	SWITCH	3	
SW41,42		VSS0172	SWITCH	2	
SW44		VSS0172	SWITCH	1	
			MISCELLANEOUS		
		VGF0191	SEARCH LED GUIDE	1	
		VGQ0457	LED SPACER	4	
		VHN0060	NYLON NUT	4	
		VMX0473	LED HOLDER	10	
		VM20829	BARRIER	1	
	■	VEP86086A	P.C.BOARD W/COMPONENT		FOR AU-63-P,E,B
			FRONT PANEL A		AU-62-P,E,B
			CAPACITORS		
C1-C9		ECKF1H103ZF	C.CAPACITOR 50V 0.01U	9	
C10		ECKF1H103ZF	C.CAPACITOR 50V 0.01U	1	
C11		ECEA1AU221	E.CAPACITOR 10V 220U	1	
D5-D7		MA165	DIODE	3	
D9		MA165	DIODE	1	
D22		MA165	DIODE	1	
D24		MA165	DIODE	1	
D26-33		MA165	DIODE	8	

Ref.No.		Part No.	Part Name & Description	Pcs	Remarks
IC1		MC74HC138N	IC	1	
IC2-C7		MC74HC374N	IC	6	
IC8		MC74HC154N	IC	1	
IC9		MC74HC541N	IC	1	
IC10		MC74HC541N	IC	1	
IC11-13		AN6873N	IC	3	
IC14-16		M54514AP	IC	3	
J2		VJP1233T	CONNECTOR(MALE) 6P	1	
J3		VJP1235T	CONNECTOR(MALE) 8P	1	
J4,J5		VJP1239T	CONNECTOR(MALE) 12P	2	
LED1-D9		LN340GCPG	LED	9	
LED10-14		LN340GCPG	LED	5	
LED15,16		AYBG5305S	LED	2	
LED17		LN217RP	LED	1	
LED18		EBG5504S	LED	1	
LED19-34		LN317GPU	DIODE	16	
Q1-Q7		2SD636	TRANSISTOR	7	
Q8		2SB641	TRANSISTOR	1	
Q9		DTC114EA	TRANSISTOR RESISTOR	1	
Q10,11		2SB643	TRANSISTOR	2	
Q12		2SB641	TRANSISTOR	1	
			RESISTORS		
R1-R9		ERDS2TJ151	C.RESISTOR 1/4W 150	9	
R10		ERDS2TJ151	C.RESISTOR 1/4W 150	1	
R11,12		ERDS2TJ221	C.RESISTOR 1/4W 220	2	
R13-16		ERDS2TJ151	C.RESISTOR 1/4W 150	4	
R17		ERDS2TJ682	C.RESISTOR 1/4W 6.8K	1	
R18		ERDS2TJ222	C.RESISTOR 1/4W 2.2K	1	
R19		ERDS2TJ682	C.RESISTOR 1/4W 6.8K	1	
R20		ERDS2TJ222	C.RESISTOR 1/4W 2.2K	1	
R21		ERDS2TJ682	C.RESISTOR 1/4W 6.8K	1	
R22,23		ERDS2TJ222	C.RESISTOR 1/4W 2.2K	2	
R24		ERDS2TJ682	C.RESISTOR 1/4W 6.8K	1	
R25		ERDS2TJ222	C.RESISTOR 1/4W 2.2K	1	
R26,27		ERDS2TJ682	C.RESISTOR 1/4W 6.8K	2	
R28,29		ERDS2TJ222	C.RESISTOR 1/4W 2.2K	2	
R30		ERDS2TJ682	C.RESISTOR 1/4W 6.8K	1	
R31		ERDS2TJ222	C.RESISTOR 1/4W 2.2K	1	
R32		ERDS2TJ682	C.RESISTOR 1/4W 6.8K	1	
R34		ERDS2TJ391	C.RESISTOR 1/4W 390	1	
R36		ERDS2TJ391	C.RESISTOR 1/4W 390	1	
R39		ERDS2TJ102	C.RESISTOR 1/4W 1K	1	
R40		ERDS2TJ103	C.RESISTOR 1/4W 10K	1	
R41		ERDS2TJ102	C.RESISTOR 1/4W 1K	1	
R42		ERDS2TJ103	C.RESISTOR 1/4W 10K	1	
R43		ERDS2TJ682	C.RESISTOR 1/4W 6.8K	1	
R44		ERDS2TJ222	C.RESISTOR 1/4W 2.2K	1	
R45,46		ERDS2TJ151	C.RESISTOR 1/4W 150	2	
RA4,A5		EXBC44151J	COMBI.R-R 150	2	
RA6,A7		EXBC44391J	COMBI.R-R 390	2	
SW5		VSP0193	SWITCH	1	
SW6		VSP0195	SWITCH	1	
SW7		VSP0224	SWITCH	1	
SW9		VSP0223	SWITCH	1	
SW22		VSP0199	SWITCH	1	
SW24		VSP0198	SWITCH	1	

Refer to the P.C.BOARDS LIST, page 6-1-1, before using this page.

Ref.No.		Part No.	Part Name & Description	Pcs	Remarks
SW26		VSP0239	SWITCH	1	
SW27		VSP0225	SWITCH	1	
SW28,29		VSS0172	SWITCH	2	
SW30-32		EVQQ8R13K	SWITCH	3	
			MISCELLANEOUS		
		VGF0191	SEARCH LED GUIDE	1	
		VGF0240	LED HOLDER	7	
		VHN0060	NYLON NUT	6	
		VJF0344	HOLDER	1	
		VJF0345	HOLDER	1	
		VMX0473	LED HOLDER	1	
		VMX1606	SPACER	1	
		VMZ0829	BARRIER	1	
	■	VEP66022A	P.C.BOARD W/COMPONENT		FOR AU-65-P,E,B
			FRONT B		
			CAPACITORS		
C1,C2		VCKD1H104ZD	C.CAPACITOR 50V 0.1U	2	
C5-C9		VCKD1H104ZD	C.CAPACITOR 50V 0.1U	5	
C10-17		VCKD1H104ZD	C.CAPACITOR 50V 0.1U	8	
C18		ECEA1AU221	E.CAPACITOR 10V 220U	1	
IC1,C2		MC74HC154N	IC	2	
IC3,C4		TC74HC540AF	IC	2	
IC5		MC74HC540N	IC	1	
IC6		TC74HC540AF	IC	1	
IC7-C9		MN74HC164S	IC	3	
IC10-16		MN74HC164S	IC	7	
IC17		MN74HC74S	IC	1	
IC18-30		TD62781AP	IC	13	
J5,J6		VJP1239T	CONNECTOR(MALE) 12P	2	
			MISCELLANEOUS		
		VMX1658	SPACER	4	
	■	VEP86076C	P.C.BOARD W/COMPONENT		FOR AU-63-P
			FRONT B		AU-62-P
BZ1		VSQ0558	BUZZER	1	
			CAPACITORS		
C1,C2		ECCF1H330JC	C.CAPACITOR 50V 33P	2	

Ref.No.		Part No.	Part Name & Description	Pcs	Remarks
C3-C5		ECKF1H103ZF	C.CAPACITOR 50V 0.01U	3	
C6		ECQV1H104JZ	P.CAPACITOR 50V 0.1U	1	
C7		ECEA1HKA010	E.CAPACITOR 50V 1U	1	
C8,C9		ECKF1H103ZF	C.CAPACITOR 50V 0.01U	2	
C10-13		ECKF1H103ZF	C.CAPACITOR 50V 0.01U	4	
C15-17		ECKF1H103ZF	C.CAPACITOR 50V 0.01U	3	
C18		ECQM1H103JV	P.CAPACITOR 50V 0.01U	1	
C19		ECEA1AKS101	E.CAPACITOR 10V 100U	1	
C20		ECKF1H103ZF	C.CAPACITOR 50V 0.01U	1	
C21		ECEA1AKS101	E.CAPACITOR 10V 100U	1	
C22-25		ECKF1H103ZF	C.CAPACITOR 50V 0.01U	4	
C26		ECEA1AKS101	E.CAPACITOR 10V 100U	1	
C27		ECEA1AKA221	E.CAPACITOR 10V 220U	1	
C28		ECQM1H102JV	P.CAPACITOR 50V 1000P	1	
C29		ECEA1HU470	E.CAPACITOR 50V 47U	1	
C30,31		ECKF1H103ZF	C.CAPACITOR 50V 0.01U	2	
C32		ECQM1H103JV	P.CAPACITOR 50V 0.01U	1	
C33		ECQM1H332JV	P.CAPACITOR 50V 3300P	1	
C34		ECQM1H103JV	P.CAPACITOR 50V 0.01U	1	
C35		ECQV1H104JZ	P.CAPACITOR 50V 0.1U	1	
C36		ECKF1H103ZF	C.CAPACITOR 50V 0.01U	1	
C37,38		ECQV1H104JZ	P.CAPACITOR 50V 0.1U	2	
C48-56		ECKF1H103ZF	C.CAPACITOR 50V 0.01U	9	
D1		MA185	DIODE	1	
D2		MA1220-M	DIODE	1	
D3		MA4075	DIODE	1	
D4-D9		MA165	DIODE	6	
D10-15		MA165	DIODE	6	
D16		1SS101	DIODE	1	
D17		MA165	DIODE	1	
D18		1SS101	DIODE	1	
IC1		MC74HC74AF	IC	1	
IC2		MC74HC161F	IC	1	
IC3		TL7705CPB	IC	1	
IC4		TMPZ84C00AP6	IC	1	
IC5,C6		MC74HC541N	IC	2	
IC7		VSI0686	IC	1	
IC8		HM6264ALP12	IC	1	
IC9		MC74HC139AF	IC	1	
IC10		MC74HC138AF	IC	1	
IC11		TMPZ84C40AP6	IC	1	
IC12		TMPZ84C30AP6	IC	1	
IC13		TMP82C79F2	IC	1	
IC14		MC74HC138AF	IC	1	
IC15		TMP82C55AP2	IC	1	
IC16		MC14015BF	IC	1	
IC17		MC14013BF	IC	1	
IC18,19		MC14516BF	IC	2	
IC20		MC14049UBF	IC	1	
IC21		MC14073BF	IC	1	
IC22		SN74LS38NS	IC	1	
IC23		MC74HC132F	IC	1	
IC24		MC74HCU04F	IC	1	
IC25		MC74HC04AF	IC	1	
IC26		MC74HC32N	IC	1	
IC27		MC14001BCP	IC	1	
IC28		MC74HC00AN	IC	1	
IC4S		VJS1428	CONNECTOR(FEMALE)	1	
IC7S		VJS1427	CONNECTOR(FEMALE)	1	
J1		VJP1145	CONNECTOR (MALE)	1	
J2		VJP1246T	CONNECTOR(MALE) 6P	1	
J3		VJP1248T	CONNECTOR(MALE) 8P	1	
J4,J5		VJP1252T	CONNECTOR(MALE) 12P	2	

Refer to the P.C.BOARDS LIST, page 6-1-1, before using this page.

Ref.No.		Part No.	Part Name & Description	Pcs	Remarks
L1,L2		VLP0017	COIL	2	
L3		VTD0035	COIL	1	
P150		VJP1976	CONNECTOR(MALE)	1	
Q1		2SD946A	TRANSISTOR	1	
Q2,Q3		2SB641	TRANSISTOR	2	
Q4		2SD1051	TRANSISTOR	1	
Q5-Q7		UN1214	TRANSISTOR-RESISTOR	3	
Q8		UN1212	TRANSISTOR-RESISTOR	1	
Q9		UN1214	TRANSISTOR-RESISTOR	1	
Q10		2SD636	TRANSISTOR	1	
			RESISTORS		
R1		ERDS2TJ105	C.RESISTOR 1/4W 1000K	1	
R2		ERDS2TJ103	C.RESISTOR 1/4W 10K	1	
R3		ERDS2TJ222	C.RESISTOR 1/4W 2.2K	1	
R4		ERDS2TJ472	C.RESISTOR 1/4W 4.7K	1	
R5		ERDS2TJ223	C.RESISTOR 1/4W 22K	1	
R6		ERDS2TJ562	C.RESISTOR 1/4W 5.6K	1	
R7		ERDS2TJ102	C.RESISTOR 1/4W 1K	1	
R8		ERDS2TJ103	C.RESISTOR 1/4W 10K	1	
R9		ERDS2TJ153	C.RESISTOR 1/4W 15K	1	
R10		ERDS2TJ103	C.RESISTOR 1/4W 10K	1	
R11		ERDS2TJ472	C.RESISTOR 1/4W 4.7K	1	
R12		ERDS2TJ103	C.RESISTOR 1/4W 10K	1	
R13		ERDS2TJ153	C.RESISTOR 1/4W 15K	1	
R14		ERDS2TJ222	C.RESISTOR 1/4W 2.2K	1	
R15		ERDS2TJ330	C.RESISTOR 1/4W 33	1	
R16		ERDS2TJ223	C.RESISTOR 1/4W 22K	1	
R17		ERDS2TJ472	C.RESISTOR 1/4W 4.7K	1	
R18		ERDS2TJ104	C.RESISTOR 1/4W 100K	1	
R19-21		ERDS2TJ103	C.RESISTOR 1/4W 10K	3	
R22		ERDS2TJ473	C.RESISTOR 1/4W 47K	1	
R23		ERDS2TJ562	C.RESISTOR 1/4W 5.6K	1	
R24		ERDS2TJ103	C.RESISTOR 1/4W 10K	1	
R25		ERDS2TJ105	C.RESISTOR 1/4W 1000K	1	
R26		ERDS2TJ472	C.RESISTOR 1/4W 4.7K	1	
R27		ERDS2TJ333	C.RESISTOR 1/4W 33K	1	
R28		ERDS2TJ223	C.RESISTOR 1/4W 22K	1	
R29		ERDS2TJ222	C.RESISTOR 1/4W 2.2K	1	
R30,31		ERDS2TJ102	C.RESISTOR 1/4W 1K	2	
RA1,A2		EXBR88223J	COMBI.R-R 22K	2	
SW1		VSR0045	SWITCH	1	
SW2		VSS023708	SWITCH	1	
TP3-P8		VJR0400Y	TEST POINT	6	
TPG1,G2		VJR0400B	TEST POINT	2	
VR1		VRV0109B103	V.RESISTOR 10K	1	
VR2		VRV0109B503	V.RESISTOR 50K	1	
X1		VSX0150	CRYSTAL OSCILLATOR	1	

Ref.No.		Part No.	Part Name & Description	Pcs	Remarks
	■	VEP86076D	P.C.BOARD W/COMPONENT		FOR AU-63-E,B
			FRONT PANEL B		AU-62-E,B
BZ1		VSQ0558	BUZZER	1	
			CAPACITORS		
C1,C2		ECCF1H330JC	C.CAPACITOR 50V 33P	2	
C3-C5		ECKF1H103ZF	C.CAPACITOR 50V 0.01U	3	
C6		ECQV1H104JZ	P.CAPACITOR 50V 0.1U	1	
C7		ECEA1HKA010	E.CAPACITOR 50V 1U	1	
C8,C9		ECKF1H103ZF	C.CAPACITOR 50V 0.01U	2	
C10-13		ECKF1H103ZF	C.CAPACITOR 50V 0.01U	4	
C15-17		ECKF1H103ZF	C.CAPACITOR 50V 0.01U	3	
C18		ECQM1H103JV	P.CAPACITOR 50V 0.01U	1	
C19		ECEA1AKS101	E.CAPACITOR 10V 100U	1	
C20		ECKF1H103ZF	C.CAPACITOR 50V 0.01U	1	
C21		ECEA1AKS101	E.CAPACITOR 10V 100U	1	
C22-25		ECKF1H103ZF	C.CAPACITOR 50V 0.01U	4	
C26		ECEA1AKS101	E.CAPACITOR 10V 100U	1	
C27		ECEA1AKA221	E.CAPACITOR 10V 220U	1	
C28		ECQM1H102JV	P.CAPACITOR 50V 1000P	1	
C29		ECEA1HU470	E.CAPACITOR 50V 47U	1	
C30,31		ECKF1H103ZF	C.CAPACITOR 50V 0.01U	2	
C32		ECQM1H103JV	P.CAPACITOR 50V 0.01U	1	
C33		ECQM1H332JV	P.CAPACITOR 50V 3300P	1	
C34		ECQM1H103JV	P.CAPACITOR 50V 0.01U	1	
C35		ECQV1H104JZ	P.CAPACITOR 50V 0.1U	1	
C36		ECKF1H103ZF	C.CAPACITOR 50V 0.01U	1	
C37,38		ECQV1H104JZ	P.CAPACITOR 50V 0.1U	2	
C48-56		ECKF1H103ZF	C.CAPACITOR 50V 0.01U	9	
D1		MA185	DIODE	1	
D2		MA1220-M	DIODE	1	
D3		MA4075	DIODE	1	
D4-D9		MA165	DIODE	6	
D10-15		MA165	DIODE	6	
D16		1SS101	DIODE	1	
D17		MA165	DIODE	1	
D18		1SS101	DIODE	1	
IC1		MC74HC74AF	IC	1	
IC2		MC74HC161F	IC	1	
IC3		TL7705CPB	IC	1	
IC4		TMPZ84C00AP6	IC	1	
IC5,C6		MC74HC541N	IC	2	
IC7		VSI0742	IC	1	
IC8		HM6264ALP12	IC	1	
IC9		MC74HC139AF	IC	1	
IC10		MC74HC138AF	IC	1	
IC11		TMPZ84C40AP6	IC	1	
IC12		TMPZ84C30AP6	IC	1	
IC13		TMPB2C79F2	IC	1	
IC14		MC74HC138AF	IC	1	
IC15		TMP82C55AP2	IC	1	
IC16		MC14015BF	IC	1	
IC17		MC14013BF	IC	1	
IC18,19		MC14516BF	IC	2	
IC20		MC14049UBF	IC	1	
IC21		MC14073BF	IC	1	
IC22		SN74LS38NS	IC	1	
IC23		MC74HC132F	IC	1	
IC24		MC74HCU04F	IC	1	

Refer to the P.C.BOARDS LIST, page 6-1-1, before using this page.

Ref.No.		Part No.	Part Name & Description	Pcs	Remarks
IC25		MC74HC04AF	IC	1	
IC26		MC74HC32N	IC	1	
IC27		MC14001BCP	IC	1	
IC28		MC74HC00AN	IC	1	
IC4S		VJS2336A040	CONNECTOR (FEMALE)	1	
IC7S		VJS2336A028	CONNECTOR (FEMALE)	1	
J1		VJP1145	CONNECTOR(MALE)	1	
J2		VJP1246T	CONNECTOR(MALE) 6P	1	
J3		VJP1248T	CONNECTOR(MALE) 8P	1	
J4,J5		VJP1252T	CONNECTOR(MALE) 12P	2	
L1,L2		VLP0017	COIL	2	
L3		VTD0035	COIL	1	
P150		VJP1976	CONNECTOR(MALE)	1	
Q1		2SD946A	TRANSISTOR	1	
Q2,Q3		2SB641	TRANSISTOR	2	
Q4		2SD1051	TRANSISTOR	1	
Q5-Q7		UN1214	TRANSISTOR-RESISTOR	3	
Q8		UN1212	TRANSISTOR-RESISTOR	1	
Q9		UN1214	TRANSISTOR-RESISTOR	1	
Q10		2SD636	TRANSISTOR	1	
			RESISTORS		
R1		ERDS2TJ105	C.RESISTOR 1/4W 1000K	1	
R2		ERDS2TJ103	C.RESISTOR 1/4W 10K	1	
R3		ERDS2TJ222	C.RESISTOR 1/4W 2.2K	1	
R4		ERDS2TJ472	C.RESISTOR 1/4W 4.7K	1	
R5		ERDS2TJ223	C.RESISTOR 1/4W 22K	1	
R6		ERDS2TJ562	C.RESISTOR 1/4W 5.6K	1	
R7		ERDS2TJ102	C.RESISTOR 1/4W 1K	1	
R8		ERDS2TJ103	C.RESISTOR 1/4W 10K	1	
R9		ERDS2TJ153	C.RESISTOR 1/4W 15K	1	
R10		ERDS2TJ103	C.RESISTOR 1/4W 10K	1	
R11		ERDS2TJ472	C.RESISTOR 1/4W 4.7K	1	
R12		ERDS2TJ103	C.RESISTOR 1/4W 10K	1	
R13		ERDS2TJ153	C.RESISTOR 1/4W 15K	1	
R14		ERDS2TJ222	C.RESISTOR 1/4W 2.2K	1	
R15		ERDS2TJ330	C.RESISTOR 1/4W 33	1	
R16		ERDS2TJ223	C.RESISTOR 1/4W 22K	1	
R17		ERDS2TJ472	C.RESISTOR 1/4W 4.7K	1	
R18		ERDS2TJ104	C.RESISTOR 1/4W 100K	1	
R19-21		ERDS2TJ103	C.RESISTOR 1/4W 10K	3	
R22		ERDS2TJ473	C.RESISTOR 1/4W 47K	1	
R23		ERDS2TJ562	C.RESISTOR 1/4W 5.6K	1	
R24		ERDS2TJ103	C.RESISTOR 1/4W 10K	1	
R25		ERDS2TJ105	C.RESISTOR 1/4W 1000K	1	
R26		ERDS2TJ472	C.RESISTOR 1/4W 4.7K	1	
R27		ERDS2TJ333	C.RESISTOR 1/4W 33K	1	
R28		ERDS2TJ223	C.RESISTOR 1/4W 22K	1	
R29		ERDS2TJ222	C.RESISTOR 1/4W 2.2K	1	
R30,31		ERDS2TJ102	C.RESISTOR 1/4W 1K	2	
RA1,A2		EXBR88223J	COMBI.R-R 22K	2	
SW1		VSR0045	SWITCH	1	
SW2		VSS023708	SWITCH	1	

Ref.No.		Part No.	Part Name & Description	Pcs	Remarks
TP3-P8		VJR0400Y	TEST POINT	6	
TPG1,G2		VJR0400B	TEST POINT	2	
VR1		VRV0109B103	V.RESISTOR 10K	1	
VR2		VRV0109B503	V.RESISTOR 50K	1	
X1		VSX0150	CRYSTAL OSCILLATOR	1	
	■	VEP86048F	P.C.BOARD W/COMPONENT		FOR AU-65-P
			FRONT PANEL C		
BZ1		VSQ0558	BUZZER	1	
			CAPACITORS		
C1,C2		ECCF1H330JC	C.CAPACITOR 50V 33P	2	
C3-C5		ECKF1H103ZF	C.CAPACITOR 50V 0.01U	3	
C6		ECQV1H104JZ	P.CAPACITOR 50V 0.1U	1	
C7		ECEA1HU010	E.CAPACITOR 50V 1U	1	
C8,C9		ECKF1H103ZF	C.CAPACITOR 50V 0.01U	2	
C10-12		ECKF1H103ZF	C.CAPACITOR 50V 0.01U	3	
C14-17		ECKF1H103ZF	C.CAPACITOR 50V 0.01U	4	
C18		ECEA1AU101	E.CAPACITOR 10V 100U	1	
C19		ECKF1H103ZF	C.CAPACITOR 50V 0.01U	1	
C20		ECEA1AU101	E.CAPACITOR 10V 100U	1	
C21-25		ECKF1H103ZF	C.CAPACITOR 50V 0.01U	5	
C26		ECQV1H104JZ	P.CAPACITOR 50V 0.1U	1	
C27-29		ECKF1H103ZF	C.CAPACITOR 50V 0.01U	3	
C30		ECCF1H101JC	C.CAPACITOR 50V 100P	1	
C31,32		ECKF1H103ZF	C.CAPACITOR 50V 0.01U	2	
C33		ECKF1H561KB	C.CAPACITOR 50V 560P	1	
C34		ECKF1H103ZF	C.CAPACITOR 50V 0.01U	1	
C35		ECEA1AU101	E.CAPACITOR 10V 100U	1	
C36,37		ECEA1AU102	E.CAPACITOR 10V 1000U	2	
C38		ECEA1HUR47	E.CAPACITOR 50V 0.47U	1	
C39		ECEA2AU101	E.CAPACITOR 100V 100U	1	
C40		ECQM1H103JV	P.CAPACITOR 50V 0.01U	1	
C41		ECQV1H104JZ	P.CAPACITOR 50V 0.1U	1	
C42		ECEA1CU100	E.CAPACITOR 16V 10U	1	
C43,44		ECKF1H103ZF	C.CAPACITOR 50V 0.01U	2	
C45		ECQM1H332JV	P.CAPACITOR 50V 3300P	1	
C46-57		ECKF1H103ZF	C.CAPACITOR 50V 0.01U	12	
C58		ECKF1H102KB	C.CAPACITOR 50V 1000P	1	
C59		ECKF1H103ZF	C.CAPACITOR 50V 0.01U	1	
C60		ECQV1H104JZ	P.CAPACITOR 50V 0.1U	1	
C61		ECQM1H103JV	P.CAPACITOR 50V 0.01U	1	
C62		ECQM1H682JV	P.CAPACITOR 50V 6800P	1	
C63		ECKF1H103ZF	C.CAPACITOR 50V 0.01U	1	
CT1		VSQ0535	REMOTO CONTROL UNIT	1	
D1		1SS101	DIODE	1	
D2-D4		MA165	DIODE	3	
D5		MA4082M	DIODE	1	
D6-D9		MA165	DIODE	4	

Refer to the P.C.BOARDS LIST, page 6-1-1, before using this page.

Ref.No.		Part No.	Part Name & Description	Pcs	Remarks
D10		1SS101	DIODE	1	
IC1		MC74HC74AF	IC	1	
IC2		MC74HC161F	IC	1	
IC3		TL7705CPB	IC	1	
IC4		TMPZ84C00AP6	IC	1	
IC5,C6		MC74HC541F	IC	2	
IC7		VSI0635A	IC	1	
IC8		HM6264ALP12	IC	1	
IC9		MC74HC139AF	IC	1	
IC10		MC74HC138AF	IC	1	
IC11		TMPZ84C40AP6	IC	1	
IC12		TMPZ84C30AP6	IC	1	
IC13		MC14015BF	IC	1	
IC14		MC14073BF	IC	1	
IC15		MC14049UBF	IC	1	
IC16		MC14013BF	IC	1	
IC17,18		MC14516BF	IC	2	
IC19		TMP82C55AF2	IC	1	
IC20		MC74HC273F	IC	1	
IC21		VSI0239	IC	1	
IC22		HD74HC93P	IC	1	
IC23		MC74HC107F	IC	1	
IC24		HD74HC93P	IC	1	
IC25		MC74HC107F	IC	1	
IC26		MC14001BF	IC	1	
IC27		TMP82C79F2	IC	1	
IC28		MC74HC244AF	IC	1	
IC29		MC74HC138AF	IC	1	
IC30		MC74HC32AF	IC	1	
IC31		SN74LS38NS	IC	1	
IC32		MC74HCU04F	IC	1	
IC33-35		MC74HC00AF	IC	3	
IC36,37		MC74HC04AF	IC	2	
IC38		MC74HC132F	IC	1	
IC39		MC14538BF	IC	1	
IC4S		VJS2336A040	CONNECTOR (FEMALE)	1	
IC7S		VJS2336A028	CONNECTOR (FEMALE)	1	
IC21S		VJS2336A028	CONNECTOR (FEMALE)	1	
J1		VJP1145	CONNECTOR (MALE)	1	
J2,J3		VJP1252T	CONNECTOR(MALE) 12P	2	
J4		VJP1250T	CONNECTOR(MALE) 10P	1	
L1,L2		VLP0017	COIL	2	
P150		VJP1976	CONNECTOR(MALE)	1	
Q1-Q3		UN1214	TRANSISTOR-RESISTOR	3	
Q4		2SA777	TRANSISTOR	1	
Q5		2SD1011	TRANSISTOR	1	
Q6		UN1212	TRANSISTOR-RESISTOR	1	
Q7		2SD636	TRANSISTOR	1	
Q8,Q9		UN1214	TRANSISTOR-RESISTOR	2	
Q10		UN1214	TRANSISTOR-RESISTOR	1	
Q11		2SD946A	TRANSISTOR	1	
			RESISTORS		
R1		ERDS2TJ105	C.RESISTOR 1/4W 1000K	1	
R2		ERDS2TJ102	C.RESISTOR 1/4W 1K	1	
R3		ERDS2TJ103	C.RESISTOR 1/4W 10K	1	
R4		ERDS2TJ124	C.RESISTOR 1/4W 120K	1	
R5		ERDS2TJ562	C.RESISTOR 1/4W 5.6K	1	

Ref.No.		Part No.	Part Name & Description	Pcs	Remarks
R7,R8		ERDS2TJ103	C.RESISTOR 1/4W 10K	2	
R9		ERDS2TJ153	C.RESISTOR 1/4W 15K	1	
R10-12		ERDS2TJ223	C.RESISTOR 1/4W 22K	3	
R13		ERDS2TJ123	C.RESISTOR 1/4W 12K	1	
R14,15		ERDS2TJ333	C.RESISTOR 1/4W 33K	2	
R16-19		ERDS2TJ103	C.RESISTOR 1/4W 10K	4	
R20		ERDS2TJ473	C.RESISTOR 1/4W 47K	1	
R21		ERDS2TJ562	C.RESISTOR 1/4W 5.6K	1	
R22		ERDS2TJ105	C.RESISTOR 1/4W 1000K	1	
R23		ERDS2TJ472	C.RESISTOR 1/4W 4.7K	1	
R24		ERDS2TJ333	C.RESISTOR 1/4W 33K	1	
R25		ERDS2TJ223	C.RESISTOR 1/4W 22K	1	
R26		ERDS2TJ222	C.RESISTOR 1/4W 2.2K	1	
R27		ERDS2TJ102	C.RESISTOR 1/4W 1K	1	
R28		ERDS2TJ333	C.RESISTOR 1/4W 33K	1	
R29,30		ERDS2TJ104	C.RESISTOR 1/4W 100K	2	
R31		ERDS2TJ222	C.RESISTOR 1/4W 2.2K	1	
R32		ERDS2TJ223	C.RESISTOR 1/4W 22K	1	
R33		ERDS2TJ472	C.RESISTOR 1/4W 4.7K	1	
R34-36		ERDS2TJ223	C.RESISTOR 1/4W 22K	3	
R36		ERDS2TJ224	C.RESISTOR 1/4W 220K	1	
R37		ERDS2TJ472	C.RESISTOR 1/4W 4.7K	1	
R38		ERDS2TJ223	C.RESISTOR 1/4W 22K	1	
R39		ERDS2TJ102	C.RESISTOR 1/4W 1K	1	
RA1		EXBR88223J	COMBI.R-R 22K	1	
RA2		EXBR85103J	COMBI.R-R 10K	1	
RA3		EXBR88223J	COMBI.R-R 22K	1	
RA4,A5		EXBC44103J	COMBI.R-R 10K	2	
RA6		EXBR88223J	COMBI.R-R 22K	1	
SW1		VSR0045	SWITCH	1	
SW2		VSS023702	SWITCH	1	
SW4		VSS023708	SWITCH	1	
TP1		VJR0400B	TEST POINT	1	
TP6,P7		VJR0400Y	TEST POINT	2	
TP12-15		VJR0400Y	TEST POINT	4	
VR1		VRV0109B103	V.RESISTOR 10K	1	
VR2		VRV0109B503	V.RESISTOR 50K	1	
X1		VSX0150	CRYSTAL OSCILLATOR	1	
	■	VEP86048G	P.C.BOARD W/COMPONENT		FOR AU-65-E,B
			FRONT PANEL C		
BZ1		VSQ0558	BUZZER	1	
			CAPACITORS		
C1,C2		ECCF1H330JC	C.CAPACITOR 50V 33P	2	
C3-C5		ECKF1H103ZF	C.CAPACITOR 50V 0.01U	3	
C6		ECQV1H104JZ	P.CAPACITOR 50V 0.1U	1	

Refer to the P.C.BOARDS LIST, page 6-1-1, before using this page.

Ref.No.		Part No.	Part Name & Description	Pcs	Remarks
C7		ECEA1HU010	E.CAPACITOR 50V 1U	1	
C8,C9		ECKF1H103ZF	C.CAPACITOR 50V 0.01U	2	
C10-12		ECKF1H103ZF	C.CAPACITOR 50V 0.01U	3	
C14-17		ECKF1H103ZF	C.CAPACITOR 50V 0.01U	4	
C18		ECEA1AU101	E.CAPACITOR 10V 100U	1	
C19		ECKF1H103ZF	C.CAPACITOR 50V 0.01U	1	
C20		ECEA1AU101	E.CAPACITOR 10V 100U	1	
C21-25		ECKF1H103ZF	C.CAPACITOR 50V 0.01U	5	
C26		ECQV1H104JZ	P.CAPACITOR 50V 0.1U	1	
C27-29		ECKF1H103ZF	C.CAPACITOR 50V 0.01U	3	
C30		ECCF1H101JC	C.CAPACITOR 50V 100P	1	
C31,32		ECKF1H103ZF	C.CAPACITOR 50V 0.01U	2	
C33		ECKF1H561KB	C.CAPACITOR 50V 560P	1	
C34		ECKF1H103ZF	C.CAPACITOR 50V 0.01U	1	
C35		ECEA1AU101	E.CAPACITOR 10V 100U	1	
C36,37		ECEA1AU102	E.CAPACITOR 10V 1000U	2	
C38		ECEA1HUR47	E.CAPACITOR 50V 0.47U	1	
C39		ECEA2AU101	E.CAPACITOR 100V 100U	1	
C40		ECQM1H103JV	P.CAPACITOR 50V 0.01U	1	
C41		ECQV1H104JZ	P.CAPACITOR 50V 0.1U	1	
C42		ECEA1CU100	E.CAPACITOR 16V 10U	1	
C43,44		ECKF1H103ZF	C.CAPACITOR 50V 0.01U	2	
C45		ECQM1H332JV	P.CAPACITOR 50V 3300P	1	
C46-57		ECKF1H103ZF	C.CAPACITOR 50V 0.01U	12	
C58		ECKF1H102KB	C.CAPACITOR 50V 1000P	1	
C59		ECKF1H103ZF	C.CAPACITOR 50V 0.01U	1	
C60		ECQV1H104JZ	P.CAPACITOR 50V 0.1U	1	
C61		ECQM1H103JV	P.CAPACITOR 50V 0.01U	1	
C62		ECQM1H682JV	P.CAPACITOR 50V 6800P	1	
C63		ECKF1H103ZF	C.CAPACITOR 50V 0.01U	1	
CT1		VSQ0535	REMOTO CONTROL UNIT	1	
D1		1SS101	DIODE	1	
D2-D4		MA165	DIODE	3	
D5		MA4082M	DIODE	1	
D6-D9		MA165	DIODE	4	
D10		1SS101	DIODE	1	
IC1		MC74HC74AF	IC	1	
IC2		MC74HC161F	IC	1	
IC3		TL7705CPB	IC	1	
IC4		TMPZ84C00AP6	IC	1	
IC5,C6		MC74HC541F	IC	2	
IC7		VSI0741	IC	1	
IC8		HM6264ALP12	IC	1	
IC9		MC74HC139AF	IC	1	
IC10		MC74HC138AF	IC	1	
IC11		TMPZ84C40AP6	IC	1	
IC12		TMPZ84C30AF6	IC	1	
IC13		MC14015BF	IC	1	
IC14		MC14073BF	IC	1	
IC15		MC14049UBF	IC	1	
IC16		MC14013BF	IC	1	
IC17,18		MC14516BF	IC	2	
IC19		TMP82C55AF2	IC	1	
IC20		MC74HC273F	IC	1	
IC21		VSI0239	IC	1	
IC22		HD74HC93P	IC	1	
IC23		MC74HC107F	IC	1	
IC24		HD74HC93P	IC	1	
IC25		MC74HC107F	IC	1	
IC26		MC14001BF	IC	1	
IC27		TMP82C79F2	IC	1	
IC28		MC74HC244AF	IC	1	
IC29		MC74HC138AF	IC	1	
IC30		MC74HC32AF	IC	1	
IC31		SN74LS38NS	IC	1	
IC32		MC74HCU04F	IC	1	

Ref.No.		Part No.	Part Name & Description	Pcs	Remarks
IC33-35		MC74HC00AF	IC	3	
IC36,37		MC74HC04AF	IC	2	
IC38		MC74HC132F	IC	1	
IC39		MC14538BF	IC	1	
IC4S		VJS2336A040	CONNECTOR (FEMALE)	1	
IC7S		VJS2336A028	CONNECTOR (FEMALE)	1	
IC21S		VJS2336A028	CONNECTOR (FEMALE)	1	
J1		VJP1145	CONNECTOR(MALE)	1	
J2,J3		VJP1252T	CONNECTOR(MALE) 12P	2	
J4		VJP1250T	CONNECTOR(MALE) 10P	1	
L1,L2		VLP0017	COIL	2	
P150		VJP1976	CONNECTOR(MALE)	1	
Q1-Q3		UN1214	TRANSISTOR-RESISTOR	3	
Q4		2SA777	TRANSISTOR	1	
Q5		2SD1011	TRANSISTOR	1	
Q6		UN1212	TRANSISTOR-RESISTOR	1	
Q7		2SD636	TRANSISTOR	1	
Q8,Q9		UN1214	TRANSISTOR-RESISTOR	2	
Q10		UN1214	TRANSISTOR-RESISTOR	1	
Q11		2SD946A	TRANSISTOR	1	
			RESISTORS		
R1		ERDS2TJ105	C.RESISTOR 1/4W 1000K	1	
R2		ERDS2TJ102	C.RESISTOR 1/4W 1K	1	
R3		ERDS2TJ103	C.RESISTOR 1/4W 10K	1	
R4		ERDS2TJ124	C.RESISTOR 1/4W 120K	1	
R5		ERDS2TJ562	C.RESISTOR 1/4W 5.6K	1	
R7,R8		ERDS2TJ103	C.RESISTOR 1/4W 10K	2	
R9		ERDS2TJ153	C.RESISTOR 1/4W 15K	1	
R10-12		ERDS2TJ223	C.RESISTOR 1/4W 22K	3	
R13		ERDS2TJ123	C.RESISTOR 1/4W 12K	1	
R14,15		ERDS2TJ333	C.RESISTOR 1/4W 33K	2	
R16-19		ERDS2TJ103	C.RESISTOR 1/4W 10K	4	
R20		ERDS2TJ473	C.RESISTOR 1/4W 47K	1	
R21		ERDS2TJ562	C.RESISTOR 1/4W 5.6K	1	
R22		ERDS2TJ105	C.RESISTOR 1/4W 1000K	1	
R23		ERDS2TJ472	C.RESISTOR 1/4W 4.7K	1	
R24		ERDS2TJ333	C.RESISTOR 1/4W 33K	1	
R25		ERDS2TJ223	C.RESISTOR 1/4W 22K	1	
R26		ERDS2TJ222	C.RESISTOR 1/4W 2.2K	1	
R27		ERDS2TJ102	C.RESISTOR 1/4W 1K	1	
R28		ERDS2TJ333	C.RESISTOR 1/4W 33K	1	
R29,30		ERDS2TJ104	C.RESISTOR 1/4W 100K	2	
R31		ERDS2TJ222	C.RESISTOR 1/4W 2.2K	1	
R32		ERDS2TJ223	C.RESISTOR 1/4W 22K	1	
R33		ERDS2TJ472	C.RESISTOR 1/4W 4.7K	1	
R34-36		ERDS2TJ223	C.RESISTOR 1/4W 22K	3	
R36		ERDS2TJ224	C.RESISTOR 1/4W 220K	1	
R37		ERDS2TJ472	C.RESISTOR 1/4W 4.7K	1	
R38		ERDS2TJ223	C.RESISTOR 1/4W 22K	1	
R39		ERDS2TJ102	C.RESISTOR 1/4W 1K	1	
RA1		EXBR88223J	COMBI.R-R 22K	1	
RA2		EXBR85103J	COMBI.R-R 10K	1	
RA3		EXBR88223J	COMBI.R-R 22K	1	
RA4,A5		EXBC44103J	COMBI.R-R 10K	2	
RA6		EXBR88223J	COMBI.R-R 22K	1	

Refer to the P.C.BOARDS LIST, page 6-1-1, before using this page.

Ref.No.		Part No.	Part Name & Description	Pcs	Remarks
SW1		VSR0045	SWITCH	1	
SW2		VSS023702	SWITCH	1	
SW4		VSS023708	SWITCH	1	
TP1		VJR0400B	TEST POINT	1	
TP6,P7		VJR0400Y	TEST POINT	2	
TP12-15		VJR0400Y	TEST POINT	4	
VR1		VRV0109B103	V.RESISTOR 10K	1	
VR2		VRV0109B503	V.RESISTOR 50K	1	
X1		VSX0150	CRYSTAL OSCILLATOR	1	
	■	VEP80552A	P.C.BOARD W/COMPONENT		
			FRONT SW VR		
			CAPACITORS		
C1		ECEA1CU101	E.CAPACITOR 16V 100U	1	
C2		ECKF1H103ZF	C.CAPACITOR 50V 0.01U	1	
C3		ECEA1CU101	E.CAPACITOR 16V 100U	1	
C4		ECKF1H103ZF	C.CAPACITOR 50V 0.01U	1	
CN190		VJP1930T	CONNECTOR	1	
L1,L2		VLQEL05S221K	COIL 220UH	2	
			RESISTORS		
R1-R9		ERDS2TJ103	C.RESISTOR 1/4W 10K	9	
R10-18		ERDS2TJ103	C.RESISTOR 1/4W 10K	9	
SW10		VSR0031	VOLTAGE SELECT SWITCH	1	
SW11		ESD32184	SWITCH	1	
VR1,R2		EVUF3AS01B53	V.RESISTOR 5K	2	
VR3-R8		EVUF3AE20B53	V.RESISTOR 5K	6	
VR9		EVUF3AS01B53	V.RESISTOR 5K	1	
	■	VEP80108A	P.C.BOARD W/COMPONENT		
			HEADPHONE VR		

Ref.No.		Part No.	Part Name & Description	Pcs	Remarks
P109		VJP1143	CONNECTOR(MALE)	1	
	■	VEP80616A	P.C.BOARD W/COMPONENT		
			HEADPHONE VR		
			CAPACITORS		
C1,C2		ECUM1H102KBN	C.CAPACITOR CH 50V 1000P	2	
L1-L3		VLQ0163K121	COIL	3	
P109		VJP1143	CONNECTOR(MALE)	1	
			MISCELLANEOUS		
		VJJ0150	EARPHONE JACE	1	
	■	VEP00E04B	P.C.BOARD W/COMPONENT		
			LOADING PHOTO		
			MISCELLANEOUS		
		ON1110-R	PHOTO INTERRUPTER	1	
	■	VEP80550A	P.C.BOARD W/COMPONENT		
			MECHA INTERFACE CIRCUIT		
			CAPACITORS		
C1-C8		ECUM1H103ZFN	C.CAPACITOR CH 50V 0.01U	8	
C18-29		ECUM1H103ZFN	C.CAPACITOR CH 50V 0.01U	12	
C30		ECUM1H331JCN	C.CAPACITOR CH 50V 330P	1	
C31		ECUM1H103ZFN	C.CAPACITOR CH 50V 0.01U	1	
C32		ECEA0JKG101	E.CAPACITOR 6.3V 100U	1	
C33		ECUM1H103ZFN	C.CAPACITOR CH 50V 0.01U	1	
C34		ECQM1H222JF	P.CAPACITOR 50V 2200P	1	
C35		ECEA1HKG0R1	E.CAPACITOR 50V 0.1U	1	
C36,37		ECEA1CKG100	E.CAPACITOR 16V 10U	2	
C200		ECUM1H103ZFN	C.CAPACITOR CH 50V 0.01U	1	
C201,02		ECEA1CKG100	E.CAPACITOR 16V 10U	2	
CN110		VJP1243T	CONNECTOR(MALE) 3P	1	
CN111		VJP1243R	CONNECTOR(MALE) 3P	1	

Refer to the P.C.BOARDS LIST, page 6-1-1, before using this page.

Ref.No.		Part No.	Part Name & Description	Pcs	Remarks
CN112		VJP1243G	CONNECTOR(MALE) 3P	1	
CN113		VJP1251T	CONNECTOR(MALE) 11P	1	
CN114		VJP1244T	CONNECTOR(MALE) 4P	1	
CN117-19		VJP1251T	CONNECTOR(MALE) 11P	3	
CN120		VJP1244T	CONNECTOR(MALE) 4P	1	
CN121		VJP1248T	CONNECTOR(MALE) 8P	1	
D10		MA151WK	DIODE	1	
D11,12		MA151K	DIODE	2	
D200-03		MA153	DIODE	4	
IC1,C2		MC14021BF	IC	2	
IC3		LM2904M	IC	1	
IC4		MC14584BF	IC	1	
IC5		MC14050BF	IC	1	
IC6		LM2903M	IC	1	
IC7		MC14013BF	IC	1	
IC8		NJM2901M	IC	1	
L1		VLQEL05S102K	COIL 1000UH	1	
P405		VJP1149	CONNECTOR(MALE)	1	
P431,32		VJP1149	CONNECTOR(MALE)	2	
P61002,03		VJP1243T	CONNECTOR(MALE) 3P	2	
P61006,07		VJP1243T	CONNECTOR(MALE) 3P	2	
P61008		VJP1246T	CONNECTOR(MALE) 6P	1	
P61017		VJP1930T	CONNECTOR	1	
P61020		VJP1930T	CONNECTOR	1	
P61021		VJP1251T	CONNECTOR(MALE) 11P	1	
P61022		VJP1244T	CONNECTOR(MALE) 4P	1	
P61025		VJP1245T	CONNECTOR(MALE) 5P	1	
P61027		VJP1243T	CONNECTOR(MALE) 3P	1	
P61032		VJP1242T	CONNECTOR(MALE) 2P	1	
P61033		VJP1243T	CONNECTOR(MALE) 3P	1	
Q15		2SB710	TRANSISTOR	1	(Q,R)
Q16,17		2SD601	TRANSISTOR CHIP	2	(Q,R)
Q200		2SD602	TRANSISTOR	1	(Q,R)
			RESISTORS		
R3		ERJ6GEYJ103	M.RESISTOR CH 1/10W 10K	1	
R40,41		ERJ6GEYJ123	M.RESISTOR CH 1/10W 12K	2	
R42		ERJ6GEYJ274	M.RESISTOR CH 1/10W 270K	1	
R43		ERJ6GEYJ223	M.RESISTOR CH 1/10W 22K	1	
R44		ERJ6GEYJ104	M.RESISTOR CH 1/10W 100K	1	
R46,47		ERJ6GEYJ563	M.RESISTOR CH 1/10W 56K	2	
R48		ERJ6GEYJ474	M.RESISTOR CH 1/10W 470K	1	
R49		ERJ6GEYJ103	M.RESISTOR CH 1/10W 10K	1	
R50		ERJ6GEYJ274	M.RESISTOR CH 1/10W 270K	1	
R51		ERJ6GEYJ333	M.RESISTOR CH 1/10W 33K	1	
R52		ERJ6GEYJ123	M.RESISTOR CH 1/10W 12K	1	
R53		ERJ6GEYJ103	M.RESISTOR CH 1/10W 10K	1	
R54		ERJ6GEYJ123	M.RESISTOR CH 1/10W 12K	1	
R55		ERJ6GEYJ103	M.RESISTOR CH 1/10W 10K	1	
R56		ERJ6GEYJ123	M.RESISTOR CH 1/10W 12K	1	
R57		ERJ6GEYJ103	M.RESISTOR CH 1/10W 10K	1	
R58		ERJ6GEYJ123	M.RESISTOR CH 1/10W 12K	1	
R59,60		ERJ6GEYJ333	M.RESISTOR CH 1/10W 33K	2	
R61,62		ERJ6GEYJ103	M.RESISTOR CH 1/10W 10K	2	
R63		ERJ6GEYJ123	M.RESISTOR CH 1/10W 12K	1	
R64		ERJ6GEYJ103	M.RESISTOR CH 1/10W 10K	1	
R65		ERJ6GEYJ123	M.RESISTOR CH 1/10W 12K	1	
R66		ERJ6GEYJ103	M.RESISTOR CH 1/10W 10K	1	

Ref.No.		Part No.	Part Name & Description	Pcs	Remarks
R67		ERJ6GEYJ123	M.RESISTOR CH 1/10W 12K	1	
R68		ERJ6GEYJ103	M.RESISTOR CH 1/10W 10K	1	
R69		ERJ6GEYJ102	M.RESISTOR CH 1/10W 1K	1	
R70		ERJ6GEYJ474	M.RESISTOR CH 1/10W 470K	1	
R71		ERJ6GEYJ103	M.RESISTOR CH 1/10W 10K	1	
R72		ERJ6GEYJ223	M.RESISTOR CH 1/10W 22K	1	
R75		ERJ6GEYJ105	M.RESISTOR CH 1/10W 1M	1	
R76,77		ERJ6GEYJ102	M.RESISTOR CH 1/10W 1K	2	
R78,79		ERJ6GEYJ105	M.RESISTOR CH 1/10W 1M	2	
R80,81		ERJ6GEYJ102	M.RESISTOR CH 1/10W 1K	2	
R82		ERJ6GEYJ105	M.RESISTOR CH 1/10W 1M	1	
R83,84		ERJ6GEYJ222	M.RESISTOR CH 1/10W 2.2K	2	
R85,86		ERJ6GEYJ104	M.RESISTOR CH 1/10W 100K	2	
R87		ERJ6GEYJ563	M.RESISTOR CH 1/10W 56K	1	
R88		ERJ6GEYJ105	M.RESISTOR CH 1/10W 1M	1	
R89		ERJ6GEYJ104	M.RESISTOR CH 1/10W 100K	1	
R90		ERJ6GEYJ563	M.RESISTOR CH 1/10W 56K	1	
R91		ERJ6GEYJ105	M.RESISTOR CH 1/10W 1M	1	
R92		ERJ6GEYJ103	M.RESISTOR CH 1/10W 10K	1	
R93		ERG12SJ220	M.RESISTOR 1/2W 22	1	
R94		ERJ6GEYJ222	M.RESISTOR CH 1/10W 2.2K	1	
R95		ERJ6GEYJ474	M.RESISTOR CH 1/10W 470K	1	
R96		ERJ6GEYJ104	M.RESISTOR CH 1/10W 100K	1	
R97		ERJ6GEYJ332	M.RESISTOR CH 1/10W 3.3K	1	
R98,99		ERJ6GEYJ181	M.RESISTOR CH 1/10W 180	2	
R100,01		ERJ6GEYJ181	M.RESISTOR CH 1/10W 180	2	
R200		ERJ6GEYJ123	M.RESISTOR CH 1/10W 12K	1	
R201		ERJ6GEYJ103	M.RESISTOR CH 1/10W 10K	1	
R202		ERJ6GEYJ101	M.RESISTOR CH 1/10W 100	1	
R203		ERJ6GEYJ272	M.RESISTOR CH 1/10W 2.7K	1	
R204		ERJ6GEYJ822	M.RESISTOR CH 1/10W 8.2K	1	
R205-08		ERJ6GEYJ102	M.RESISTOR CH 1/10W 1K	4	
R209		ERJ6GEYJ563	M.RESISTOR CH 1/10W 56K	1	
R210		ERJ6GEYJ123	M.RESISTOR CH 1/10W 12K	1	
R211		ERJ6GEYJ101	M.RESISTOR CH 1/10W 100	1	
			MISCELLANEOUS		
		VHN0011	NYLON NUT	5	
		VJF0304	CLAMPER	8	
		VMZ1716	BARRIER	1	
	■	VEP80333B	P.C.BOARD W/COMPONENT		
			METER LAMP		
LED1-D4		VLL0048	LED	4	
LED9		VLL0048	LED	1	
LED10-16		VLL0048	LED	7	
P100		VJP1149	CONNECTOR(MALE)	1	
			RESISTORS		
R1		ERDS1TJ152	C.RESISTOR 1/2W 1.5K	1	
R3,R4		ERDS1TJ152	C.RESISTOR 1/2W 1.5K	2	
			MISCELLANEOUS		
		KL-02	LED SPACER	12	

Refer to the P.C.BOARDS LIST, page 6-1-1, before using this page.

Ref.No.		Part No.	Part Name & Description	Pcs	Remarks
	■	VEP81042A	P.C.BOARD W/COMPONENT		
			POWER FILTER		
			CAPACITORS		
C2		ECQU2A224MN	P.CAPACITOR 250V 0.22U	1	
C3-C6		VCK0083	C.CAPACITOR 3300P	4	
C7		ECQU2A224MN	P.CAPACITOR 250V 0.22U	1	
F1		XBA1C63NU100	FUSE A	1	
L1		VLF0873	COIL	1	
POWER20-22		VJP2638	CONNECTOR (MALE)	3	
			MISCELLANEOUS		
		VJF0318	HOLDER	2	
		VMZ0730	BARRIER	4	
	■	VEP81058A	P.C.BOARD W/COMPONENT		
			POWER FILTER		
			CAPACITORS		
C2		ECQU2A224MN	P.CAPACITOR 250V 0.22U	1	
C3-C6		VCK0046	.CAPACITOR V	4	
C7		ECQU2A224MN	P.CAPACITOR 250V 0.22U	1	
F1		XBA2C63TB0	FUSE	1	
L1		VLF0930	COIL	1	
POWER20-22		VJP2638	CONNECTOR (MALE)	3	
			MISCELLANEOUS		
		VJF0318	FUSE HOLDER	2	
		VMZ0730	CAPACITANCE COVER	4	
		VMZ1305	CAPACITANCE COVER	2	

Ref.No.		Part No.	Part Name & Description	Pcs	Remarks
		VYK3004	P.C.BOARD W/COMPONENT		
			POWER SUPPLY UNIT		
			CAPACITORS		
C1		ECQU2A224MT	P.CAPACITOR AC250V 0.22U	1	
C2		ECQU2A224MT	P.CAPACITOR AC250V 0.22U	1	
C3		ECQB1H473KF	P.CAPACITOR 50V 0.047U	1	
C4,C5		ECQV1J105JZ	P.CAPACITOR 1U	2	
C6,C7		ECKDRS222ME	C.CAPACITOR AC400V 2200P	2	
C8,C9		ECOS2EA681EA	E.CAPACITOR 250V 680U	2	
C10		ECQE6104KF	P.CAPACITOR 630V 0.1UF	1	
C11		ECQB1H333KF	P.CAPACITOR 50V 0.033U	1	
C12		ECKD3A471KBP	C.CAPACITOR 1KV 470U	1	
C13		ECQV1J105JZ	P.CAPACITOR 1U	1	
C14		ECEA1VFE101	E.CAPACITOR 35V 100U	1	
C15		ECKD3A471KBP	C.CAPACITOR 1KV 470U	1	
C16		ECQB1H102KF	P.CAPACITOR 50V 1000P	1	
C17		ECKD3A101KB	C.CAPACITOR 1KV 100U	1	
C18,19		ECKDRS222ME	C.CAPACITOR AC400V 2200P	2	
C20		ECQB1H683KF	P.CAPACITOR 50V 0.068U	1	
C51		ECKD3A102KB	C.CAPACITOR 1KV 1000P	1	
C52		ECKD3A681KB	C.CAPACITOR 1KV 680U	1	
C53		ECEA1VFE102	E.CAPACITOR 35V 1000U	1	
C54		ECQB1H152KF	P.CAPACITOR 50V 1500P	1	
C55		ECQB1H102KF	P.CAPACITOR 50V 1000P	1	
C56		ECKD3A102KB	C.CAPACITOR 1KV 1000P	1	
C57		ECKD3A681KB	C.CAPACITOR 1KV 680U	1	
C58		ECA1AFQ102L	E.CAPACITOR 10V 1000U	1	
C59		ECEA1AFE152	E.CAPACITOR 10V 1500U	1	
C60		ECEA1HFE331	E.CAPACITOR 50V 330U	1	
C61		ECEA1EFE221	E.CAPACITOR 25V 220U	1	
C62,63		ECQB1H102KF	P.CAPACITOR 50V 1000P	2	
C64,65		ECKD3A681KB	C.CAPACITOR 1KV 680U	2	
C66		ECEA1VFE102	E.CAPACITOR 25V 1000U	1	
C67		ECQB1H102KF	P.CAPACITOR 50V 1000P	1	
C68,69		ECKD3A681KB	C.CAPACITOR 1KV 680U	2	
C70		ECEA1EFE681	E.CAPACITOR 25V 680U	1	
C71		ECEA1EFE471L	E.CAPACITOR 25V 470U	1	
C72		ECQB1H102KF	P.CAPACITOR 50V 1000P	1	
C73,74		ECKD3A681KB	C.CAPACITOR 1KV 680U	2	
C75		ECEA1CFE821	E.CAPACITOR 16V 820U	1	
C76		ECEA1CFE681	E.CAPACITOR 16V 680U	1	
C77		ECQB1H102KF	P.CAPACITOR 50V 1000P	1	
C78		ECEA1CFE821	E.CAPACITOR 16V 820U	1	
C79		ECEA1CFE681	E.CAPACITOR 16V 680U	1	
C80		ECQB1H102KF	P.CAPACITOR 50V 1000P	1	
C81		ECEA1CFE681	E.CAPACITOR 16V 680U	1	
C82,83		ECEA1EFE471L	E.CAPACITOR 25V 470U	2	
C84		ECQB1H104KF	P.CAPACITOR 50V 0.1U	1	
C85-88		ECKD3A681KB	C.CAPACITOR 1KV 680U	4	
C89		ECEA1HFE270	E.CAPACITOR 50V 27U	1	
C90		ECA1EKF100	E.CAPACITOR 25V 10U	1	
C91		ECEA1EFE471L	E.CAPACITOR 25V 470U	1	
C92		ECQB1H222KF	P.CAPACITOR 50V 2200P	1	
C93		ECQB1H102KF	P.CAPACITOR 50V 1000P	1	
C94		ECQB1H473KF	P.CAPACITOR 50V 0.047U	1	
C95		ECQV1H224JZ	P.CAPACITOR 50V 0.22U	1	
C96		ECQB1H103KF	P.CAPACITOR 50V 0.01U	1	
CP1		VJP2824B004	CONNECTOR (MALE)	1	
CP2		VJP3015	CONNECTOR (MALE)	1	
CP51		VJP2824B006	CONNECTOR (MALE)	1	
CP52		VJP2824B007	CONNECTOR (MALE)	1	
CP53		VJP2824B008	CONNECTOR (MALE)	1	
CP54		VJP3016	CONNECTOR (MALE)	1	
CR1		AC08FGM	DIODE	1	

Refer to the P.C.BOARDS LIST, page 6-1-1, before using this page.

Ref.No.		Part No.	Part Name & Description	Pcs	Remarks
CR2		ERB44-06	DIODE	1	
CR4,R5		RD75EB	ZENER	1	
CR4,R5		RD68EB	ZENER	2	
CR6		RD12EB2	DIODE	1	
CR7		RBV606	DIODE	1	
CR8,R9		1SS118	DIODE	2	
CR10		AC08DGM	DIODE	1	
CR11		N413	DIODE	1	
CR12		11DF2	DIODE	1	
CR13		ERB37-10	DIODE	1	
CR14		11DF2	DIODE	1	
CR15,16		ERB37-10	DIODE	2	
CR51		ESAC92M-03	DIODE	1	
CR52		CTB-34	DIODE	1	
CR53-55		1SS120	DIODE	3	
CR56		RD13EB2	ZENER	1	
CR57		1SS120	DIODE	1	
CR58		RD9.1ESB2	ZENER	1	
CR59		RD39EB2	ZENER	1	
CR60		1SS120	DIODE	1	
CR61		RD9.1ESB2	ZENER	1	
CR62		1SS120	DIODE	1	
CR63		RD5.6JSB2	ZENER	1	
CR64		HZS6.8NB2	DIODE	1	
CR65		03P2M	THYRISTOR	1	
CR66		1SS118	DIODE	1	
CR67-69		1SS120	DIODE	3	
CR70		ESAB92M-02	DIODE	1	
CR71,72		1SS120	DIODE	2	
CR74,73		ESAB92M-02	DIODE	2	
CR75-77		1SS120	DIODE	3	
CR78		RD4.7JSB2	ZENER	1	
CR79		1SS118	DIODE	1	
CR80,81		1SS120	DIODE	2	
CR82		RD3.0ESB2	ZENER	1	
CR83		11DF2	DIODE	1	
CR84,85		ESAB92-02N	DIODE	2	
CR86		1SS120	DIODE	1	
CR87		11DF2	DIODE	1	
CR88		1SS120	DIODE	1	
CR89,90		11DF2	DIODE	2	
F1		EYP2BN098	FUSE	1	
IC51,52		MB3759P	IC	2	
IC53		UPC339C	IC	1	
IC54		UPC337H	IC	1	
L1		VLF0873	FILTER	1	
L51,52		VLQ0477	COIL	2	
L53		VLQ0478	COIL	1	
L54		VLQ0479	COIL	1	
L55		VLQ0480	COIL	1	
L56		VLQ0481	COIL	1	
L57,58		VLQ0482	COIL	2	
L59		VLQ0483	COIL	1	
Q1		2SA1015Y	TRANSISTOR	1	
Q2		2SA562TMY	TRANSISTOR	1	
Q3		2SA1015Y	TRANSISTOR	1	
Q4		2SK719	TRANSISTOR	1	
Q5		2SA562TMY	TRANSISTOR	1	
Q6		2SK794	TRANSISTOR	1	
Q7		2SA562TMY	TRANSISTOR	1	
Q51		2SD880Y	TRANSISTOR	1	
Q52		2SD1406	TRANSISTOR	1	
Q53		2SC2655Y	TRANSISTOR	1	

Ref.No.		Part No.	Part Name & Description	Pcs	Remarks
Q54		2SC1815Y	TRANSISTOR	1	
Q56		2SC1815Y	TRANSISTOR	1	
Q57		2SC2655Y	TRANSISTOR	1	
Q58		2SA1015Y	TRANSISTOR	1	
Q59		2SC1815Y	TRANSISTOR	1	
Q60		2SC1815Y	TRANSISTOR	1	
			RESISTORS		
R1		ERF5RJ220	W.RESISTOR 5W 22	1	
R2		ERDS2FJ102	C.RESISTOR 1/4W 1K	1	
R3		ERDS2FJ104	C.RESISTOR 1/4W 100K	1	
R4		ERDS2FJ473	C.RESISTOR 1/4W 47K	1	
R5		ERDS2FJ472	C.RESISTOR 1/4W 4.7K	1	
R6		ERD25FJ124	C.RESISTOR 1/4W 120K	1	
R7		ERDS2FJ105	C.RESISTOR 1/4W 1M	1	
R8		ERDS2FJ103	C.RESISTOR 1/4W 10K	1	
R9		ERDS2FJ473	C.RESISTOR 1/4W 47K	1	
R10		ERDS2FJ102	C.RESISTOR 1/4W 1K	1	
R11		ERG2SJ120	M.RESISTOR 2W 12	1	
R12		ERX2SJ3R9	M.RESISTOR 2W 3.9	1	
R13		ERD25FJ102	C.RESISTOR 1/4W 1K	1	
R14		ERG2SJ330	M.RESISTOR 2W 33	1	
R15,16		ERD50FJ184	C.RESISTOR 1/4W 180K	2	
R17,18		ERD50FJ104	C.RESISTOR 1/2W 100K	2	
R19		ERDS2FJ471	C.RESISTOR 1/4W 470	1	
R20		ERDS2FJ2R2	C.RESISTOR 1/4W 2.2	1	
R21		ERF5RJ220	W.RESISTOR 5W 22	1	
R22		ERD50FJ100	C.RESISTOR 1/2W 10	1	
R23		ERD50FJ150	C.RESISTOR 1/2W 15	1	
R24		ERD50FJ471	C.RESISTOR 1/2W 470	1	
R25		ERF5RJ220	W.RESISTOR 5W 22	1	
R26		ERDS2FJ471	C.RESISTOR 1/6W 470	1	
R27		ERDS2FJ2R2	C.RESISTOR 1/4W 2.2	1	
R28		ERD50FJ150	C.RESISTOR 1/2W 15	1	
R29		ERD50FJ471	C.RESISTOR 1/2W 470	1	
R30		ERD50FJ100	C.RESISTOR 1/2W 10	1	
R31		ERD25FJ124	C.RESISTOR 1/4W 120K	1	
R32		ERD50FJ105	C.RESISTOR 1/4W 1M	1	
R33		ERG2SJ330	M.RESISTOR 2W 33	1	
R34		ERDS2FJ102	C.RESISTOR 1/4W 1K	1	
R35		ERD25FJ221	C.RESISTOR 1/4W 220	1	
R51,52		ERD50FJ100	C.RESISTOR 1/2W 10	2	
R53		ERF5RJ221	W.RESISTOR 5W 220	1	
R54		ERG1ANJ470	M.RESISTOR 1W 47	1	
R55		EROS2CHF1200	M.RESISTOR 1/6W 120	1	
R56		EROS2CHF39R0	M.RESISTOR 1/6W 39	1	
R57,58		ERD50FJ100	C.RESISTOR 1/2W 10	2	
R59-61		ERD50FJ101	C.RESISTOR 1/2W 100	3	
R62,63		ERD50FJ122	C.RESISTOR 1/2W 1.2K	2	
R64		ERDS2FJ471	C.RESISTOR 1/4W 470	1	
R65		ERD25FJ471	C.RESISTOR 1/4W 470	1	
R66		EROS2CHF4702	M.RESISTOR 1/4W 47K	1	
R67		EROS2CHF1802	M.RESISTOR 1/4W 18K	1	
R68		ERDS2FJ101	C.RESISTOR 1/4W 100	1	
R69,70		ERDS2FJ102	C.RESISTOR 1/4W 1K	2	
R71		ERD25FJ6R8	C.RESISTOR 1/4W 6.8K	1	
R72		ERD50FJ102	C.RESISTOR 1/2W 1K	1	
R73		ERDS2FJ331	C.RESISTOR 1/4W 330	1	
R74		ERDS2FJ102	C.RESISTOR 1/4W 1K	1	
R75		ERDS2FJ222	C.RESISTOR 1/4W 2.2K	1	
R76		ERDS2FJ912	C.RESISTOR 1/4W 9.1K	1	
R77		EROS2CHF1201	M.RESISTOR 1/4W 1.2K	1	
R78		ERDS2FJ102	C.RESISTOR 1/4W 1K	1	
R79		ERDS2FJ223	C.RESISTOR 1/4W 22K	1	
R80		ERDS2FJ104	C.RESISTOR 1/4W 100K	1	
R81		VRV0064B102	V.RESISTOR 1K	1	
R82		EROS2CHF1801	M.RESISTOR 1/4W 1.8K	1	
R83		EROS2CHF6800	M.RESISTOR 1/4W 680	1	
R84		ERDS2FJ222	C.RESISTOR 1/4W 2.2K	1	
R85		VRT0029	THERMISTER	1	
R86		ERDS2FJ332	C.RESISTOR 1/4W 3.3K	1	
R87		ERDS2FJ222	C.RESISTOR 1/4W 2.2K	1	
R89		ERDS2FJ103	C.RESISTOR 1/4W 10K	1	

Refer to the P.C.BOARDS LIST, page 6-1-1, before using this page.

Ref.No.		Part No.	Part Name & Description	Pcs	Remarks
R90		ERDS2FJ222	C.RESISTOR 1/4W 2.2K	1	
R91		ERQS2CHF1800	M.RESISTOR 1/4W 180	1	
R92,93		ERD50FJ100	C.RESISTOR 1/2W 10	2	
R94		ERD50FJ122	C.RESISTOR 1/2W 1.2K	1	
R95		ERQS2CHF1500	M.RESISTOR 1/4W 150	1	
R96,97		ERD50FJ100	C.RESISTOR 1/2W 10	2	
R98		ERD50FJ102	C.RESISTOR 1/2W 1K	1	
R99		ERDS2FJ102	C.RESISTOR 1/4W 1K	1	
R100		ERQS2CHF2700	M.RESISTOR 1/4W 270	1	
R101,02		ERD50FJ100	C.RESISTOR 1/2W 10	2	
R103		ERD50FJ471	C.RESISTOR 1/2W 470	1	
R104		ERQS2CHF2700	M.RESISTOR 1/4W 270	1	
R105		ERD50FJ102	C.RESISTOR 1/2W 1K	1	
R106		ERD50FJ561	C.RESISTOR 1/2W 560	1	
R107		ERQS2CHF2700	M.RESISTOR 1/4W 270	1	
R108		ERD25FJ471	C.RESISTOR 1/4W 470	1	
R109		ERQS2CHF4702	M.RESISTOR 1/4W 47K	1	
R110		ERQS2CHF2202	M.RESISTOR 1/4W 22K	1	
R111		ERDS2FJ471	C.RESISTOR 1/4W 470	1	
R112		ERD25FJ6R8	C.RESISTOR 1/4W 6.8K	1	
R113		ERD50FJ681	C.RESISTOR 1/2W 680	1	
R114		ERDS2FJ331	C.RESISTOR 1/4W 330	1	
R115		ERDS2FJ102	C.RESISTOR 1/4W 1K	1	
R116		ERDS2FJ331	C.RESISTOR 1/4W 330	1	
R117		ERDS2FJ471	C.RESISTOR 1/4W 470	1	
R118		ERQS2CHF2201	M.RESISTOR 1/4W 2.2K	1	
R119		ERQS2CHF1501	M.RESISTOR 1/4W 1.5K	1	
R120		ERDS2FJ223	C.RESISTOR 1/4W 22K	1	
R121		ERQS2CHF1201	M.RESISTOR 1/4W 1.2K	1	
R122		VRV0064B102	V.RESISTOR 1K	1	
R123		ERQS2CHF3301	M.RESISTOR 1/4W 3.3K	1	
R124		ERDS2FJ121	C.RESISTOR 1/4W 120	1	
R125		ERQS2CHF1101	M.RESISTOR 1/4W 1.1K	1	
R126-29		ERD50FJ100	C.RESISTOR 1/2W 10	4	
R130		ERQS2CHF6800	M.RESISTOR 1/4W 680	1	
R131,32		ERDS2FJ332	C.RESISTOR 1/4W 3.3K	2	
R134		ERDS2FJ103	C.RESISTOR 1/4W 10K	1	
R135		ERDS2FJ562	C.RESISTOR 1/4W 5.6K	1	
R136		ERDS2FJ102	C.RESISTOR 1/4W 1K	1	
R137		ERDS2FJ392	C.RESISTOR 1/4W 3.9K	1	
R138		ERDS2FJ102	C.RESISTOR 1/4W 1K	1	
R139		ERDS2FJ101	C.RESISTOR 1/4W 100	1	
R140,41		ERDS2FJ102	C.RESISTOR 1/4W 1K	2	
R142		ERDS2FJ182	C.RESISTOR 1/4W 1.8K	1	
R143		ERDS2FJ222	C.RESISTOR 1/4W 2.2K	1	
R144		ERF5RJ221	W.RESISTOR 5W 220	1	
R146		ERQS2CHF3000	M.RESISTOR 1/4W 300	1	
T1		VTP0324	TRANSFORMER	1	
T2		VTP0325	TRANSFORMER	1	
T3,T4		VTP0326	TRANSFORMER	2	
T51-57		VLT0630	TRANSFORMER	7	
			MISCELLANEOUS		
		VHD0601	SCREW	4	
		VMP2697	SUPPORT	2	
		VMZ1609	INSULATOR	2	
		VMZ1610	INSULATOR	2	
		VSC3124	COOLING BODY	2	
		VSC3125	COOLING BODY	1	
		VSC3136	INSULATOR	1	
		XNG3ES	NUT	1	
		XYNV3+K8	SCREW	12	
		VYK3637	P.C.BOARD W/COMPONENT		
			POWER SUPPLY UNIT		

Ref.No.		Part No.	Part Name & Description	Pcs	Remarks
			CAPACITORS		
C1		ECQU2A224MT	P.CAPACITOR AC250V 0.22U	1	
C2		ECQU2A224MT	P.CAPACITOR AC250V 0.22U	1	
C3		ECQB1H473KF	P.CAPACITOR 50V 0.047U	1	
C4,C5		ECQV1J105JZ	P.CAPACITOR 1U	2	
C6,C7		ECKDRS222ME	C.CAPACITOR AC400V 2200P	2	
C8,C9		ECOS2EA681EA	E.CAPACITOR 250V 680U	2	
C10		ECQE6104KF	P.CAPACITOR 630V 0.1UF	1	
C11		ECQB1H333KF	P.CAPACITOR 50V 0.033U	1	
C12		ECKD3A471KBP	C.CAPACITOR 1KV 470U	1	
C13		ECQV1J105JZ	P.CAPACITOR 1U	1	
C14		ECEA1VFE101	E.CAPACITOR 35V 100U	1	
C15		ECKD3A471KBP	C.CAPACITOR 1KV 470U	1	
C16		ECQV1J105JZ	P.CAPACITOR 63V 1UF	1	
C17		ECKD3A101KBP	C.CAPACITOR 1KV 100U	1	
C18,19		ECKDRS222ME	C.CAPACITOR AC400V 2200P	2	
C20		ECQB1H683KF	P.CAPACITOR 50V 0.068U	1	
C51		ECKD3A102KBP	C.CAPACITOR 1KV 1000P	1	
C52		ECKD3A681KBP	C.CAPACITOR 1KV 680U	1	
C53		ECEA1VFE102	E.CAPACITOR 35V 1000U	1	
C54		ECQB1H152KF	P.CAPACITOR 50V 1500P	1	
C55		ECQB1H102KF	P.CAPACITOR 50V 1000P	1	
C56		ECKD3A102KBP	C.CAPACITOR 1KV 1000P	1	
C57		ECKD3A681KBP	C.CAPACITOR 1KV 680U	1	
C58		ECA1AFQ102L	E.CAPACITOR 10V 1000U	1	
C59		ECEA1AFE152	E.CAPACITOR 10V 1500U	1	
C60		ECEA1HFE331	E.CAPACITOR 50V 330U	1	
C61		ECEA1EFE221	E.CAPACITOR 25V 220U	1	
C62,63		ECQB1H102KF	P.CAPACITOR 50V 1000P	2	
C64,65		ECKD3A681KBP	C.CAPACITOR 1KV 680U	2	
C66		ECEA1VFE102	E.CAPACITOR 25V 1000U	1	
C67		ECQB1H102KF	P.CAPACITOR 50V 1000P	1	
C68,69		ECKD3A681KBP	C.CAPACITOR 1KV 680U	2	
C70		ECEA1EFE681	E.CAPACITOR 25V 680U	1	
C71		ECEA1EFE471	E.CAPACITOR 25V 470U	1	
C72		ECQB1H102KF	P.CAPACITOR 50V 1000P	1	
C73,74		ECKD3A681KBP	C.CAPACITOR 1KV 680U	2	
C75		ECEA1CFE821	E.CAPACITOR 16V 820U	1	
C76		ECEA1CFE681	E.CAPACITOR 16V 680U	1	
C77		ECQB1H102KF	P.CAPACITOR 50V 1000P	1	
C78		ECEA1CFE821	E.CAPACITOR 16V 820U	1	
C79		ECEA1CFE681	E.CAPACITOR 16V 680U	1	
C80		ECQB1H102KF	P.CAPACITOR 50V 1000P	1	
C81		ECEA1CFE681	E.CAPACITOR 16V 680U	1	
C82,83		ECEA1EFE471	E.CAPACITOR 25V 470U	2	
C84		ECQB1H104KF	P.CAPACITOR 50V 0.1U	1	
C85-88		ECKD3A681KBP	C.CAPACITOR 1KV 680U	4	
C89		ECEA1HFE270	E.CAPACITOR 50V 27U	1	
C90		ECA1EKF100	E.CAPACITOR 25V 10U	1	
C91		ECEA1EFE471	E.CAPACITOR 25V 470U	1	
C92		ECQB1H222KF	P.CAPACITOR 50V 2200P	1	
C93		ECQB1H102KF	P.CAPACITOR 50V 1000P	1	
C94		ECQB1H473KF	P.CAPACITOR 50V 0.047U	1	
C95		ECQV1H224JZ	P.CAPACITOR 50V 0.22U	1	
C96		ECQB1H103KF	P.CAPACITOR 50V 0.01U	1	
CP1		VJP2824B004	CONNECTOR (MALE)	1	
CP2		VJP3015	CONNECTOR (MALE)	1	
CP51		VJP2824B006	CONNECTOR (MALE)	1	
CP52		VJP2824B007	CONNECTOR (MALE)	1	
CP53		VJP2824B008	CONNECTOR (MALE)	1	
CP54		VJP3016	CONNECTOR (MALE)	1	
CR1		AC08FGM	DIODE	1	
CR2		ERB44-06	DIODE	1	

Refer to the P.C.BOARDS LIST, page 6-1-1, before using this page.

Ref.No.		Part No.	Part Name & Description			Pcs	Remarks
CR3		RD75EB	ZENER			1	
CR4,R5		RD68EB	ZENER			2	
CR6		RD12EB2	DIODE			1	
CR7		RBV606	DIODE			1	
CR8,R9		1SS118	DIODE			2	
CR10		AC08FGM	DIODE			1	
CR11		N413	DIODE			1	
CR12		11DF2	DIODE			1	
CR13		ERB37-10	DIODE			1	
CR14		11DF2	DIODE			1	
CR15,16		ERB37-10	DIODE			2	
CR51		ESAC92M-03	DIODE			1	
CR52		CTB-34	DIODE			1	
CR53,54		1SS120	DIODE			3	
CR55		11DF2	DIODE			1	
CR56		RD13EB2	ZENER			1	
CR57		1SS120	DIODE			1	
CR58		RD9.1ESB2	ZENER			1	
CR59		RD39ESB2	ZENER			1	
F1		EYP2BN098	FUSE			1	
L1		VLF0930	FILTER			1	
Q1		2SA1015Y	TRANSISTOR			1	
Q2		2SA562TMY	TRANSISTOR			1	
Q3		2SA1015Y	TRANSISTOR			1	
Q53		2SC2655Y	TRANSISTOR			1	
Q54		2SC1815Y	TRANSISTOR			1	
Q56		2SC1815Y	TRANSISTOR			1	
Q57		2SC2655Y	TRANSISTOR			1	
Q58		2SA1015Y	TRANSISTOR			1	
Q59		2SC1815Y	TRANSISTOR			1	
Q60		2SC1815Y	TRANSISTOR			1	
			RESISTORS				
R1		ERF5RJ220	W.RESISTOR	5W	22	1	
R2		ERDS2FJ102	C.RESISTOR	1/4W	1K	1	
R3		ERDS2FJ104	C.RESISTOR	1/4W	100K	1	
R4		ERDS2FJ473	C.RESISTOR	1/4W	47K	1	
R5		ERDS2FJ472	C.RESISTOR	1/4W	4.7K	1	
R6		ERD25FJ124	C.RESISTOR	1/4W	120K	1	
R7		ERDS2FJ105	C.RESISTOR	1/4W	1M	1	
R8		ERDS2FJ103	C.RESISTOR	1/4W	10K	1	
R9		ERDS2FJ473	C.RESISTOR	1/4W	47K	1	
R10		ERDS2FJ102	C.RESISTOR	1/4W	1K	1	
R11		ERG2SJ120	M.RESISTOR	2W	12	1	
R12		ERX2SJ3R9	M.RESISTOR	2W	3.9	1	
R13		ERD25FJ102	C.RESISTOR	1/4W	1K	1	
R14		ERG2SJ330	M.RESISTOR	2W	33	1	
R15,16		ERD50FJ184	C.RESISTOR	1/4W	180K	2	
R17,18		ERD50FJ104	C.RESISTOR	1/2W	100K	2	
R19		ERDS2FJ471	C.RESISTOR	1/4W	470	1	
R20		ERDS2FJ2R2	C.RESISTOR	1/4W	2.2	1	
R21		ERF5RJ220	W.RESISTOR	5W	22	1	
R22		ERD50FJ100	C.RESISTOR	1/2W	10	1	
R23		ERD50FJ150	C.RESISTOR	1/2W	15	1	
R24		ERD50FJ471	C.RESISTOR	1/2W	470	1	
R25		ERF5RJ220	W.RESISTOR	5W	22	1	
R26		ERDS2FJ471	C.RESISTOR	1/6W	470	1	
R27		ERDS2FJ2R2	C.RESISTOR	1/4W	2.2	1	
R28		ERD50FJ150	C.RESISTOR	1/2W	15	1	
R29		ERD50FJ471	C.RESISTOR	1/2W	470	1	
R30		ERD50FJ100	C.RESISTOR	1/2W	10	1	
R31		ERD25FJ124	C.RESISTOR	1/4W	120K	1	
R32		ERD50FJ105	C.RESISTOR	1/4W	1M	1	
R33		ERG2SJ330	M.RESISTOR	2W	33	1	

Ref.No.		Part No.	Part Name & Description			Pcs	Remarks
R34		ERDS2FJ102	C.RESISTOR	1/4W	1K	1	
R35		ERD25FJ221	C.RESISTOR	1/4W	220	1	
R51,52		ERD50FJ100	C.RESISTOR	1/2W	10	2	
R53		ERF5RJ221	W.RESISTOR	5W	220	1	
R54		ERG1ANJ470	M.RESISTOR	1W	47	1	
R55		EROS2CHF1000	M.RESISTOR	1/6W	100	1	
R56		EROS2CHF39R0	M.RESISTOR	1/6W	39	1	
R57,58		ERD50FJ100	C.RESISTOR	1/2W	10	2	
R59-61		ERD50FJ101	C.RESISTOR	1/2W	100	3	
R62,63		ERD50FJ122	C.RESISTOR	1/2W	1.2K	2	
R64		ERDS2FJ471	C.RESISTOR	1/4W	470	1	
R65		ERD25FJ471	C.RESISTOR	1/4W	470	1	
R66		EROS2CHF4702	M.RESISTOR	1/4W	47K	1	
R67		EROS2CHF1802	M.RESISTOR	1/4W	18K	1	
R68		ERDS2FJ101	C.RESISTOR	1/4W	100	1	
R69,70		ERDS2FJ102	C.RESISTOR	1/4W	1K	2	
R71		ERD25FJ6R8	C.RESISTOR	1/4W	6.8K	1	
R72		ERD50FJ102	C.RESISTOR	1/2W	1K	1	
R73		ERDS2FJ331	C.RESISTOR	1/4W	330	1	
R74		ERDS2FJ102	C.RESISTOR	1/4W	1K	1	
R75		ERDS2FJ222	C.RESISTOR	1/4W	2.2K	1	
R76		ERDS2FJ912	C.RESISTOR	1/4W	9.1K	1	
R77		EROS2CHF1201	M.RESISTOR	1/4W	1.2K	1	
R78		ERDS2FJ102	C.RESISTOR	1/4W	1K	1	
R79		ERDS2FJ223	C.RESISTOR	1/4W	22K	1	
R80		ERDS2FJ104	C.RESISTOR	1/4W	100K	1	
R81		VRV0112B102	V.RESISTOR	1/2W	1K	1	
R82		EROS2CHF1801	M.RESISTOR	1/4W	1.8K	1	
R83		EROS2CHF6800	M.RESISTOR	1/4W	680	1	
R84		ERDS2FJ222	C.RESISTOR	1/4W	2.2K	1	
R85		VRT0029	THERMISTER			1	
R86		ERDS2FJ332	C.RESISTOR	1/4W	3.3K	1	
R87		ERDS2FJ222	C.RESISTOR	1/4W	2.2K	1	
R89		ERDS2FJ103	C.RESISTOR	1/4W	10K	1	
R90		ERDS2FJ222	C.RESISTOR	1/4W	2.2K	1	
R91		EROS2CHF1800	M.RESISTOR	1/4W	180	1	
R92,93		ERD50FJ100	C.RESISTOR	1/2W	10	2	
R94		ERD50FJ122	C.RESISTOR	1/2W	1.2K	1	
R95		EROS2CHF1500	M.RESISTOR	1/4W	150	1	
R96,97		ERD50FJ100	C.RESISTOR	1/2W	10	2	
R98		ERD50FJ102	C.RESISTOR	1/2W	1K	1	
R99		ERDS2FJ102	C.RESISTOR	1/4W	1K	1	
R100		EROS2CHF2700	M.RESISTOR	1/4W	270	1	
R101,02		ERD50FJ100	C.RESISTOR	1/2W	10	2	
R103		ERD50FJ471	C.RESISTOR	1/2W	470	1	
R104		EROS2CHF2700	M.RESISTOR	1/4W	270	1	
R105		ERD50FJ102	C.RESISTOR	1/2W	1K	1	
R106		ERD50FJ561	C.RESISTOR	1/2W	560	1	
R107		EROS2CHF2700	M.RESISTOR	1/4W	270	1	
R108		ERD25FJ471	C.RESISTOR	1/4W	470	1	
R109		EROS2CHF4702	M.RESISTOR	1/4W	47K	1	
R110		EROS2CHF2202	M.RESISTOR	1/4W	22K	1	
R111		ERDS2FJ471	C.RESISTOR	1/4W	470	1	
R112		ERD25FJ6R8	C.RESISTOR	1/4W	6.8K	1	
R113		ERD50FJ681	C.RESISTOR	1/2W	680	1	
R114		ERDS2FJ331	C.RESISTOR	1/4W	330	1	
R115		ERDS2FJ102	C.RESISTOR	1/4W	1K	1	
R116		ERDS2FJ331	C.RESISTOR	1/4W	330	1	
R117		ERDS2FJ471	C.RESISTOR	1/4W	470	1	
R118		EROS2CHF2201	M.RESISTOR	1/4W	2.2K	1	
R119		EROS2CHF1501	M.RESISTOR	1/4W	1.5K	1	
R120		ERDS2FJ223	C.RESISTOR	1/4W	22K	1	
R121		EROS2CHF1201	M.RESISTOR	1/4W	1.2K	1	
R122		VRV0112B102	V.RESISTOR	1/2W	1K	1	
R123		EROS2CHF3301	M.RESISTOR	1/4W	3.3K	1	
R124		ERDS2FJ121	C.RESISTOR	1/4W	120	1	
R125		EROS2CHF1101	M.RESISTOR	1/4W	1.1K	1	
R126-29		ERD50FJ100	C.RESISTOR	1/2W	10	4	
R130		EROS2CHF6800	M.RESISTOR	1/4W	680	1	
R131,32		ERDS2FJ332	C.RESISTOR	1/4W	3.3K	2	
R134		ERDS2FJ103	C.RESISTOR	1/4W	10K	1	
R135		ERDS2FJ562	C.RESISTOR	1/4W	5.6K	1	
R136		ERDS2FJ102	C.RESISTOR	1/4W	1K	1	
R137		ERDS2FJ392	C.RESISTOR	1/4W	3.9K	1	
R138		ERDS2FJ102	C.RESISTOR	1/4W	1K	1	

Refer to the P.C.BOARDS LIST, page 6-1-1, before using this page.

Ref.No.		Part No.	Part Name & Description	Pcs	Remarks
R139		ERDS2FJ101	C.RESISTOR 1/4W 100	1	
R140,41		ERDS2FJ102	C.RESISTOR 1/4W 1K	2	
R142		ERDS2FJ182	C.RESISTOR 1/4W 1.8K	1	
R143		ERDS2FJ222	C.RESISTOR 1/4W 2.2K	1	
R144		ERF5RJ221	W.RESISTOR 5W 220	1	
R146		EROS2CHF3000	M.RESISTOR 1/4W 300	1	
T1		VTP0324	TRANSFORMER	1	
T2		VTP0325	TRANSFORMER	1	
T3,T4		VTP0326	TRANSFORMER	2	
T51-57		VLT0630	TRANSFORMER	7	
			MISCELLANEOUS		
		VHD0601	SCREW	4	
		VMP2697	SUPPORT	2	
		VMZ1609	INSULATOR	2	
		VMZ1610	INSULATOR	2	
		VSC3125	COOLING BODY	1	
		VSC3136	INSULATOR	1	
		VSC3400	COOLING BODY	2	
		XNG3ES	SCREW (NUT)	2	
		XNG3ES	NUT	1	
		XYNV3+K8	SCREW	2	
		XYNV3+K8	SCREW	10	
	■	VEP85015A	P.C.BOARD W/COMPONENT		FOR AU-65-P
			RA & HA		
			CAPACITORS		
C1		ECEA1HUR33	E.CAPACITOR 50V 0.33U	1	
C2		ECEA1CU100	E.CAPACITOR 16V 10U	1	
C3		ECUM1H103KBN	C.CAPACITOR CH 50V 0.01U	1	
C4		ECEA1HUR33	E.CAPACITOR 50V 0.33U	1	
C5		ECEA1CU100	E.CAPACITOR 16V 10U	1	
C6		ECUM1H103KBN	C.CAPACITOR CH 50V 0.01U	1	
C7		ECEA1AU101	E.CAPACITOR 10V 100U	1	
C17		ECEA1AU101	E.CAPACITOR 10V 100U	1	
C27-30		ECUM1E104ZFN	C.CAPACITOR CH 25V 0.1U	4	
C31-39		ECUM1H103KBN	C.CAPACITOR CH 50V 0.01U	9	
C40		ECUM1E104ZFN	C.CAPACITOR CH 25V 0.1U	1	
C41		ECUM1H103KBN	C.CAPACITOR CH 50V 0.01U	1	
C42		ECUM1E104ZFN	C.CAPACITOR CH 25V 0.1U	1	
C43		ECUM1H103KBN	C.CAPACITOR CH 50V 0.01U	1	
C44		ECUM1E104ZFN	C.CAPACITOR CH 25V 0.1U	1	
C45		ECUM1H103KBN	C.CAPACITOR CH 50V 0.01U	1	
C46,47		ECUM1E104ZFN	C.CAPACITOR CH 25V 0.1U	2	
C48		ECUM1H470JCN	C.CAPACITOR CH 50V 47P	1	
C50		ECUM1E104ZFN	C.CAPACITOR CH 25V 0.1U	1	
C51		ECUM1H470JCN	C.CAPACITOR CH 50V 47P	1	
C53		ECUM1E104ZFN	C.CAPACITOR CH 25V 0.1U	1	
C56		ECUM1E104ZFN	C.CAPACITOR CH 25V 0.1U	1	
C59		ECUM1H103KBN	C.CAPACITOR CH 50V 0.01U	1	
C60		ECEA1AU101	E.CAPACITOR 10V 100U	1	
C61,62		ECUM1E104ZFN	C.CAPACITOR CH 25V 0.1U	2	
C63		ECUM1H103KBN	C.CAPACITOR CH 50V 0.01U	1	
C64		ECEA1AU101	E.CAPACITOR 10V 100U	1	
C65,66		ECUM1E104ZFN	C.CAPACITOR CH 25V 0.1U	2	
C67		ECUM1H103KBN	C.CAPACITOR CH 50V 0.01U	1	
C68		ECEA1AU101	E.CAPACITOR 10V 100U	1	
C69,70		ECUM1E104ZFN	C.CAPACITOR CH 25V 0.1U	2	
C71		ECUM1H103KBN	C.CAPACITOR CH 50V 0.01U	1	

Ref.No.		Part No.	Part Name & Description	Pcs	Remarks
C72		ECEA1AU101	E.CAPACITOR 10V 100U	1	
C73,74		ECUM1E104ZFN	C.CAPACITOR CH 25V 0.1U	2	
C75-78		ECEA1CU470	E.CAPACITOR 16V 47U	4	
C79		ECUM1H103KBN	C.CAPACITOR CH 50V 0.01U	1	
C80		ECEA1EU470	E.CAPACITOR 25V 47U	1	
C81-86		ECCD2H330JC	C.CAPACITOR 500V 33P	6	
C87		ECEA1EU470	E.CAPACITOR 25V 47U	1	
C88		ECUM1H103KBN	C.CAPACITOR CH 50V 0.01U	1	
C201		ECUM1H103KBN	C.CAPACITOR CH 50V 0.01U	1	
C202		ECEA1EU100	E.CAPACITOR 25V 10U	1	
C203		ECUM1H103KBN	C.CAPACITOR CH 50V 0.01U	1	
C204		ECSF0JE106	T.CAPACITOR 6.3V 10U	1	
C205		ECUM1H103KBN	C.CAPACITOR CH 50V 0.01U	1	
C206		ECUM1E104ZFN	C.CAPACITOR CH 25V 0.1U	1	
C207		ECEA1CU470	E.CAPACITOR 16V 47U	1	
C208,09		ECUM1H103KBN	C.CAPACITOR CH 50V 0.01U	2	
C210		ECEA1EU100	E.CAPACITOR 25V 10U	1	
C211		ECUM1H103KBN	C.CAPACITOR CH 50V 0.01U	1	
C212		ECSF0JE106	T.CAPACITOR 6.3V 10U	1	
C213		ECUM1H103KBN	C.CAPACITOR CH 50V 0.01U	1	
C214		ECUM1E104ZFN	C.CAPACITOR CH 25V 0.1U	1	
C215		ECEA1CU470	E.CAPACITOR 16V 47U	1	
C216,17		ECUM1H103KBN	C.CAPACITOR CH 50V 0.01U	2	
C218		ECEA1EU100	E.CAPACITOR 25V 10U	1	
C219		ECUM1H103KBN	C.CAPACITOR CH 50V 0.01U	1	
C220		ECSF0JE106	T.CAPACITOR 6.3V 10U	1	
C221		ECUM1H103KBN	C.CAPACITOR CH 50V 0.01U	1	
C222		ECUM1E104ZFN	C.CAPACITOR CH 25V 0.1U	1	
C223		ECEA1CU470	E.CAPACITOR 16V 47U	1	
C224,25		ECUM1H103KBN	C.CAPACITOR CH 50V 0.01U	2	
C226		ECEA1EU100	E.CAPACITOR 25V 10U	1	
C227		ECUM1H103KBN	C.CAPACITOR CH 50V 0.01U	1	
C228		ECSF0JE106	T.CAPACITOR 6.3V 10U	1	
C229		ECUM1H103KBN	C.CAPACITOR CH 50V 0.01U	1	
C230		ECUM1E104ZFN	C.CAPACITOR CH 25V 0.1U	1	
C231		ECEA1CU470	E.CAPACITOR 16V 47U	1	
C232		ECUM1H103KBN	C.CAPACITOR CH 50V 0.01U	1	
C233,34		ECEA1CU470	E.CAPACITOR 16V 47U	2	
C235,36		ECUM1E104ZFN	C.CAPACITOR CH 25V 0.1U	2	
CN81		VJP1511T	CONNECTOR(MALE)	1	
CN82		VJP1233R	CONNECTOR(MALE) 6P	1	
CN83		VJP1233T	CONNECTOR(MALE) 6P	1	
CN84		VJP1233G	CONNECTOR(MALE) 6P	1	
CN85		VJP1233T	CONNECTOR(MALE) 6P	1	
CN86		VJP1233G	CONNECTOR(MALE) 6P	1	
CN87		VJP1233T	CONNECTOR(MALE) 6P	1	
D201		MA151K	DIODE	1	
IC1		AN78N05	IC	1	
IC2		AN79N05	IC	1	
IC7-C9		AN6308S	IC	3	
IC10		AN6308S	IC	1	
IC11-14		NJM592M8	IC	4	
IC201-04		NJM592M8	IC	4	
IC205		AN78N09	IC	1	
L1-L6		VLQEL05F101K	COIL 100UH	6	
L7-L9		VLQEL05S470K	COIL (L)	3	
L10		VLQEL05S470K	COIL (L)	1	
L11,12		VLQEL05F101K	COIL 100UH	2	
L13,14		VLQ0211M3R3		2	
L201-05		VLQEL05F101K	COIL 100UH	5	

Refer to the P.C.BOARDS LIST, page 6-1-1, before using this page.

Ref.No.		Part No.	Part Name & Description	Pcs	Remarks
Q5-Q8		2SC2295	TRANSISTOR CHIP	4	(B,C)
Q9		2SC2851	TRANSISTOR	1	
Q10-16		2SC2851	TRANSISTOR	7	
Q17-23		2SB789	TRANSISTOR	7	(Q,R)
Q201		2SC3757	TRANSISTOR	1	(Q,R)
Q202,03		2SK316	TRANSISTOR	2	(Q)
Q204,05		2SC3757	TRANSISTOR	2	(Q,R)
Q206,07		2SK316	TRANSISTOR	2	(Q)
Q208,09		2SC3757	TRANSISTOR	2	(Q,R)
Q210,11		2SK316	TRANSISTOR	2	(Q)
Q212,13		2SC3757	TRANSISTOR	2	(Q,R)
Q214,15		2SK316	TRANSISTOR	2	(Q)
Q216		2SC3757	TRANSISTOR	1	(Q,R)
Q217		2SD602	TRANSISTOR CHIP	1	(Q,R,S)
Q218		UN2213	TRANSISTOR-RESISTOR	1	
Q219		2SB643	TRANSISTOR	1	
Q220,21		2SD602	TRANSISTOR CHIP	2	(Q,R,S)
Q222-25		2SC3757	TRANSISTOR	4	(Q,R)
			RESISTORS		
R8		ERJ6GEYJ750	M.RESISTOR CH 1/10W 75	1	
R16		ERJ6GEYJ750	M.RESISTOR CH 1/10W 75	1	
R21,22		ERJ6GEYJ470	M.RESISTOR CH 1/10W 47	2	
R27,28		ERJ6GEYJ470	M.RESISTOR CH 1/10W 47	2	
R29		ERJ6GEYJ103	M.RESISTOR CH 1/10W 10K	1	
R30		ERJ6GEYJ122	M.RESISTOR CH 1/10W 1.2K	1	
R31		ERJ6GEYJ103	M.RESISTOR CH 1/10W 10K	1	
R32		ERJ6GEYJ122	M.RESISTOR CH 1/10W 1.2K	1	
R33		ERJ6GEYJ103	M.RESISTOR CH 1/10W 10K	1	
R34		ERJ6GEYJ122	M.RESISTOR CH 1/10W 1.2K	1	
R35		ERJ6GEYJ103	M.RESISTOR CH 1/10W 10K	1	
R36		ERJ6GEYJ122	M.RESISTOR CH 1/10W 1.2K	1	
R37		ERJ6GEYJ222	M.RESISTOR CH 1/10W 2.2K	1	
R38		ERJ6GEYJ681	M.RESISTOR CH 1/10W 680	1	
R39		ERJ6GEYJ151	M.RESISTOR CH 1/10W 150	1	
R40		ERJ6GEYJ471	M.RESISTOR CH 1/10W 470	1	
R41		ERJ6GEYJ101	M.RESISTOR CH 1/10W 100	1	
R42		ERJ6GEYJ331	M.RESISTOR CH 1/10W 330	1	
R43,44		ERJ6GEYJ222	M.RESISTOR CH 1/10W 2.2K	2	
R45,46		ERJ6GEYJ470	M.RESISTOR CH 1/10W 47	2	
R47		ERJ6GEYJ222	M.RESISTOR CH 1/10W 2.2K	1	
R48		ERJ6GEYJ681	M.RESISTOR CH 1/10W 680	1	
R49		ERJ6GEYJ151	M.RESISTOR CH 1/10W 150	1	
R50		ERJ6GEYJ471	M.RESISTOR CH 1/10W 470	1	
R51		ERJ6GEYJ101	M.RESISTOR CH 1/10W 100	1	
R52		ERJ6GEYJ331	M.RESISTOR CH 1/10W 330	1	
R53,54		ERJ6GEYJ222	M.RESISTOR CH 1/10W 2.2K	2	
R55,56		ERJ6GEYJ470	M.RESISTOR CH 1/10W 47	2	
R57		ERJ6GEYJ222	M.RESISTOR CH 1/10W 2.2K	1	
R58		ERJ6GEYJ681	M.RESISTOR CH 1/10W 680	1	
R59		ERJ6GEYJ151	M.RESISTOR CH 1/10W 150	1	
R60		ERJ6GEYJ471	M.RESISTOR CH 1/10W 470	1	
R61		ERJ6GEYJ101	M.RESISTOR CH 1/10W 100	1	
R62		ERJ6GEYJ331	M.RESISTOR CH 1/10W 330	1	
R63,64		ERJ6GEYJ222	M.RESISTOR CH 1/10W 2.2K	2	
R65,66		ERJ6GEYJ470	M.RESISTOR CH 1/10W 47	2	
R67		ERJ6GEYJ222	M.RESISTOR CH 1/10W 2.2K	1	
R68		ERJ6GEYJ681	M.RESISTOR CH 1/10W 680	1	
R69		ERJ6GEYJ151	M.RESISTOR CH 1/10W 150	1	
R70		ERJ6GEYJ471	M.RESISTOR CH 1/10W 470	1	
R71		ERJ6GEYJ101	M.RESISTOR CH 1/10W 100	1	
R72		ERJ6GEYJ331	M.RESISTOR CH 1/10W 330	1	
R73,74		ERJ6GEYJ222	M.RESISTOR CH 1/10W 2.2K	2	
R75,76		ERJ6GEYJ470	M.RESISTOR CH 1/10W 47	2	
R77		ERJ6GEYJ152	M.RESISTOR CH 1/10W 1.5K	1	
R78		ERJ6GEYJ102	M.RESISTOR CH 1/10W 1K	1	
R79		ERDS2TJ470	C.RESISTOR 1/4W 47	1	
R80		ERJ6GEYJ680	M.RESISTOR CH 1/10W 68	1	
R81		ERDS2TJ470	C.RESISTOR 1/4W 47	1	
R82		ERJ6GEYJ102	M.RESISTOR CH 1/10W 1K	1	
R83		ERJ6GEYJ152	M.RESISTOR CH 1/10W 1.5K	1	
R84		ERJ6GEYJ102	M.RESISTOR CH 1/10W 1K	1	
R85,86		ERJ6GEYJ331	M.RESISTOR CH 1/10W 330	2	

Ref.No.		Part No.	Part Name & Description	Pcs	Remarks
R87		ERJ6GEYJ152	M.RESISTOR CH 1/10W 1.5K	1	
R88		ERJ6GEYJ102	M.RESISTOR CH 1/10W 1K	1	
R89		ERDS2TJ470	C.RESISTOR 1/4W 47	1	
R90		ERJ6GEYJ680	M.RESISTOR CH 1/10W 68	1	
R91		ERDS2TJ470	C.RESISTOR 1/4W 47	1	
R92		ERJ6GEYJ102	M.RESISTOR CH 1/10W 1K	1	
R93		ERJ6GEYJ152	M.RESISTOR CH 1/10W 1.5K	1	
R94		ERJ6GEYJ102	M.RESISTOR CH 1/10W 1K	1	
R95,96		ERJ6GEYJ331	M.RESISTOR CH 1/10W 330	2	
R97		ERJ6GEYJ152	M.RESISTOR CH 1/10W 1.5K	1	
R98		ERJ6GEYJ102	M.RESISTOR CH 1/10W 1K	1	
R99		ERDS2TJ470	C.RESISTOR 1/4W 47	1	
R100		ERJ6GEYJ680	M.RESISTOR CH 1/10W 68	1	
R101		ERDS2TJ470	C.RESISTOR 1/4W 47	1	
R102		ERJ6GEYJ102	M.RESISTOR CH 1/10W 1K	1	
R103		ERJ6GEYJ152	M.RESISTOR CH 1/10W 1.5K	1	
R104		ERJ6GEYJ102	M.RESISTOR CH 1/10W 1K	1	
R105,06		ERJ6GEYJ331	M.RESISTOR CH 1/10W 330	2	
R107		ERJ6GEYJ152	M.RESISTOR CH 1/10W 1.5K	1	
R108		ERJ6GEYJ102	M.RESISTOR CH 1/10W 1K	1	
R109		ERDS2TJ470	C.RESISTOR 1/4W 47	1	
R110		ERJ6GEYJ680	M.RESISTOR CH 1/10W 68	1	
R111		ERDS2TJ470	C.RESISTOR 1/4W 47	1	
R112		ERJ6GEYJ102	M.RESISTOR CH 1/10W 1K	1	
R113		ERJ6GEYJ152	M.RESISTOR CH 1/10W 1.5K	1	
R114		ERJ6GEYJ102	M.RESISTOR CH 1/10W 1K	1	
R115,16		ERJ6GEYJ331	M.RESISTOR CH 1/10W 330	2	
R117		ERJ6GEYJ332	M.RESISTOR CH 1/10W 3.3K	1	
R118		ERJ6GEYJ103	M.RESISTOR CH 1/10W 10K	1	
R119		ERJ6GEYJ182	M.RESISTOR CH 1/10W 1.8K	1	
R120		ERJ6GEYJ472	M.RESISTOR CH 1/10W 4.7K	1	
R121		ERJ8GCJ820	M.RESISTOR CH 1/8W 82	1	
R122,23		ERJ6GEYJ821	M.RESISTOR CH 1/10W 820	2	
R124,25		ERJ6GEYJ332	M.RESISTOR CH 1/10W 3.3K	2	
R126		ERJ6GEYJ103	M.RESISTOR CH 1/10W 10K	1	
R127		ERJ6GEYJ101	M.RESISTOR CH 1/10W 100	1	
R128		ERJ6GEYJ103	M.RESISTOR CH 1/10W 10K	1	
R129		ERJ6GEYJ182	M.RESISTOR CH 1/10W 1.8K	1	
R130		ERJ6GEYJ472	M.RESISTOR CH 1/10W 4.7K	1	
R131		ERJ8GCJ820	M.RESISTOR CH 1/8W 82	1	
R132,33		ERJ6GEYJ821	M.RESISTOR CH 1/10W 820	2	
R134,35		ERJ6GEYJ332	M.RESISTOR CH 1/10W 3.3K	2	
R136		ERJ6GEYJ103	M.RESISTOR CH 1/10W 10K	1	
R137		ERJ6GEYJ101	M.RESISTOR CH 1/10W 100	1	
R138		ERJ6GEYJ103	M.RESISTOR CH 1/10W 10K	1	
R201		ERJ6GEYJ472	M.RESISTOR CH 1/10W 4.7K	1	
R202		ERJ6GEYJ470	M.RESISTOR CH 1/10W 47	1	
R203		ERJ6GEYJ222	M.RESISTOR CH 1/10W 2.2K	1	
R204		ERJ6GEYJ333	M.RESISTOR CH 1/10W 33K	1	
R205		ERJ6GEYJ472	M.RESISTOR CH 1/10W 4.7K	1	
R206-08		ERJ6GEYJ152	M.RESISTOR CH 1/10W 1.5K	3	
R209		ERJ6GEYJ680	M.RESISTOR CH 1/10W 68	1	
R210		ERJ6GEYJ272	M.RESISTOR CH 1/10W 2.7K	1	
R211		ERJ6GEYJ102	M.RESISTOR CH 1/10W 1K	1	
R212		ERJ6GEYJ470	M.RESISTOR CH 1/10W 47	1	
R213		ERJ6GEYJ103	M.RESISTOR CH 1/10W 10K	1	
R214		ERJ6GEYJ470	M.RESISTOR CH 1/10W 47	1	
R215		ERJ6GEYJ103	M.RESISTOR CH 1/10W 10K	1	
R216		ERJ6GEYJ181	M.RESISTOR CH 1/10W 180	1	
R217		ERJ6GEYJ470	M.RESISTOR CH 1/10W 47	1	
R218		ERJ6GEYJ471	M.RESISTOR CH 1/10W 470	1	
R219		ERJ6GEYJ472	M.RESISTOR CH 1/10W 4.7K	1	
R220		ERJ6GEYJ470	M.RESISTOR CH 1/10W 47	1	
R221		ERJ6GEYJ222	M.RESISTOR CH 1/10W 2.2K	1	
R222		ERJ6GEYJ333	M.RESISTOR CH 1/10W 33K	1	
R223		ERJ6GEYJ472	M.RESISTOR CH 1/10W 4.7K	1	
R224-26		ERJ6GEYJ152	M.RESISTOR CH 1/10W 1.5K	3	
R227		ERJ6GEYJ680	M.RESISTOR CH 1/10W 68	1	
R228		ERJ6GEYJ272	M.RESISTOR CH 1/10W 2.7K	1	
R229		ERJ6GEYJ102	M.RESISTOR CH 1/10W 1K	1	
R230		ERJ6GEYJ470	M.RESISTOR CH 1/10W 47	1	
R231		ERJ6GEYJ103	M.RESISTOR CH 1/10W 10K	1	
R232		ERJ6GEYJ470	M.RESISTOR CH 1/10W 47	1	
R233		ERJ6GEYJ103	M.RESISTOR CH 1/10W 10K	1	
R234		ERJ6GEYJ181	M.RESISTOR CH 1/10W 180	1	

Refer to the P.C.BOARDS LIST, page 6-1-1, before using this page.

Ref.No.		Part No.	Part Name & Description	Pcs	Remarks
R235		ERJ6GEYJ470	M.RESISTOR CH 1/10W 47	1	
R236		ERJ6GEYJ471	M.RESISTOR CH 1/10W 470	1	
R237		ERJ6GEYJ332	M.RESISTOR CH 1/10W 3.3K	1	
R238		ERJ6GEYJ470	M.RESISTOR CH 1/10W 47	1	
R239		ERJ6GEYJ222	M.RESISTOR CH 1/10W 2.2K	1	
R240		ERJ6GEYJ223	M.RESISTOR CH 1/10W 22K	1	
R241		ERJ6GEYJ472	M.RESISTOR CH 1/10W 4.7K	1	
R242-44		ERJ6GEYJ152	M.RESISTOR CH 1/10W 1.5K	3	
R245		ERJ6GEYJ680	M.RESISTOR CH 1/10W 68	1	
R246		ERJ6GEYJ272	M.RESISTOR CH 1/10W 2.7K	1	
R247		ERJ6GEYJ102	M.RESISTOR CH 1/10W 1K	1	
R248		ERJ6GEYJ470	M.RESISTOR CH 1/10W 47	1	
R249		ERJ6GEYJ103	M.RESISTOR CH 1/10W 10K	1	
R250		ERJ6GEYJ470	M.RESISTOR CH 1/10W 47	1	
R251		ERJ6GEYJ103	M.RESISTOR CH 1/10W 10K	1	
R252		ERJ6GEYJ151	M.RESISTOR CH 1/10W 150	1	
R253		ERJ6GEYJ470	M.RESISTOR CH 1/10W 47	1	
R254		ERJ6GEYJ471	M.RESISTOR CH 1/10W 470	1	
R255		ERJ6GEYJ332	M.RESISTOR CH 1/10W 3.3K	1	
R256		ERJ6GEYJ470	M.RESISTOR CH 1/10W 47	1	
R257		ERJ6GEYJ222	M.RESISTOR CH 1/10W 2.2K	1	
R258		ERJ6GEYJ223	M.RESISTOR CH 1/10W 22K	1	
R259		ERJ6GEYJ472	M.RESISTOR CH 1/10W 4.7K	1	
R260-62		ERJ6GEYJ152	M.RESISTOR CH 1/10W 1.5K	3	
R263		ERJ6GEYJ680	M.RESISTOR CH 1/10W 68	1	
R264		ERJ6GEYJ272	M.RESISTOR CH 1/10W 2.7K	1	
R265		ERJ6GEYJ102	M.RESISTOR CH 1/10W 1K	1	
R266		ERJ6GEYJ470	M.RESISTOR CH 1/10W 47	1	
R267		ERJ6GEYJ103	M.RESISTOR CH 1/10W 10K	1	
R268		ERJ6GEYJ470	M.RESISTOR CH 1/10W 47	1	
R269		ERJ6GEYJ103	M.RESISTOR CH 1/10W 10K	1	
R270		ERJ6GEYJ151	M.RESISTOR CH 1/10W 150	1	
R271		ERJ6GEYJ470	M.RESISTOR CH 1/10W 47	1	
R272		ERJ6GEYJ471	M.RESISTOR CH 1/10W 470	1	
R273,74		ERJ6GEYJ392	M.RESISTOR CH 1/10W 3.9K	2	
R275		ERJ6GEYJ222	M.RESISTOR CH 1/10W 2.2K	1	
R276,77		ERDS2TJ102	C.RESISTOR 1/4W 1K	2	
R278-81		ERJ6GEYJ470	M.RESISTOR CH 1/10W 47	4	
RY1-Y4		VSY2039	RELAY	4	
T1-T6		EIR7QE018B	TRANSFORMER	6	
T201,02		VLT0535	TRANSFORMER	2	
T203,04		VLT0536	TRANSFORMER	2	
TP1-P8		VJR0582	PACK PIN	8	
TP201-04		VJR0582	PACK PIN	4	
TPG1-G3		VJR0582	PACK PIN	3	
VC1-C4		VCV0031	TRIMMER	4	
VR3-R6		VRV0064B102		4	
			MISCELLANEOUS		
		VJF0004	HOLDER	2	
		VMP0972	P.C.B. HOLDER ANGLE	1	
		VSC2340	SHIELD CASE	1	
		VSC2341	SHIELD CASE	1	
		VSC2342	SHIELD CASE	1	
		XTV3+6F	SCREW	2	

Ref.No.		Part No.	Part Name & Description	Pcs	Remarks
	■	VEP85015B	P.C.BOARD W/COMPONENT		FOR AU-62-P
			RA & HA		
			CAPACITORS		
C201		ECUM1H103KBN	C.CAPACITOR CH 50V 0.01U	1	
C202		ECEA1EU100	E.CAPACITOR 25V 10U	1	
C203		ECUM1H103KBN	C.CAPACITOR CH 50V 0.01U	1	
C204		ECSF0JE106	T.CAPACITOR 6.3V 10U	1	
C205		ECUM1H103KBN	C.CAPACITOR CH 50V 0.01U	1	
C206		ECUM1E104ZFN	C.CAPACITOR CH 25V 0.1U	1	
C207		ECEA1CU470	E.CAPACITOR 16V 47U	1	
C208,09		ECUM1H103KBN	C.CAPACITOR CH 50V 0.01U	2	
C210		ECEA1EU100	E.CAPACITOR 25V 10U	1	
C211		ECUM1H103KBN	C.CAPACITOR CH 50V 0.01U	1	
C212		ECSF0JE106	T.CAPACITOR 6.3V 10U	1	
C213		ECUM1H103KBN	C.CAPACITOR CH 50V 0.01U	1	
C214		ECUM1E104ZFN	C.CAPACITOR CH 25V 0.1U	1	
C215		ECEA1CU470	E.CAPACITOR 16V 47U	1	
C216,17		ECUM1H103KBN	C.CAPACITOR CH 50V 0.01U	2	
C218		ECEA1EU100	E.CAPACITOR 25V 10U	1	
C219		ECUM1H103KBN	C.CAPACITOR CH 50V 0.01U	1	
C220		ECSF0JE106	T.CAPACITOR 6.3V 10U	1	
C221		ECUM1H103KBN	C.CAPACITOR CH 50V 0.01U	1	
C222		ECUM1E104ZFN	C.CAPACITOR CH 25V 0.1U	1	
C223		ECEA1CU470	E.CAPACITOR 16V 47U	1	
C224,25		ECUM1H103KBN	C.CAPACITOR CH 50V 0.01U	2	
C226		ECEA1EU100	E.CAPACITOR 25V 10U	1	
C227		ECUM1H103KBN	C.CAPACITOR CH 50V 0.01U	1	
C228		ECSF0JE106	T.CAPACITOR 6.3V 10U	1	
C229		ECUM1H103KBN	C.CAPACITOR CH 50V 0.01U	1	
C230		ECUM1E104ZFN	C.CAPACITOR CH 25V 0.1U	1	
C231		ECEA1CU470	E.CAPACITOR 16V 47U	1	
C232		ECUM1H103KBN	C.CAPACITOR CH 50V 0.01U	1	
C233,34		ECEA1CU470	E.CAPACITOR 16V 47U	2	
C235,36		ECUM1E104ZFN	C.CAPACITOR CH 25V 0.1U	2	
CN81		VJP1511T	CONNECTOR(MALE)	1	
CN83		VJP1233T	CONNECTOR(MALE) 6P	1	
CN84		VJP1233G	CONNECTOR(MALE) 6P	1	
CN85		VJP1233T	CONNECTOR(MALE) 6P	1	
CN86		VJP1233G	CONNECTOR(MALE) 6P	1	
D201		MA151K	DIODE	1	
IC201-04		NJM592M8	IC	4	
IC205		AN78N09	IC	1	
L201-05		VLQE1L05F101K	COIL 100UH	5	
Q201		2SC3757	TRANSISTOR	1	(Q,R)
Q202,03		2SK316	TRANSISTOR	2	(Q)
Q204,05		2SC3757	TRANSISTOR	2	(Q,R)
Q206,07		2SK316	TRANSISTOR	2	(Q)
Q208,09		2SC3757	TRANSISTOR	2	(Q,R)
Q210,11		2SK316	TRANSISTOR	2	(Q)
Q212,13		2SC3757	TRANSISTOR	2	(Q,R)
Q214,15		2SK316	TRANSISTOR	2	(Q)

Refer to the P.C.BOARDS LIST, page 6-1-1, before using this page.

Ref.No.		Part No.	Part Name & Description	Pcs	Remarks
Q216		2SC3757	TRANSISTOR	1	(Q,R)
Q217		2SD602	TRANSISTOR CHIP	1	(Q,R,S)
Q218		UN2213	TRANSISTOR-RESISTOR	1	
Q219		2SB643	TRANSISTOR	1	
Q220,21		2SD602	TRANSISTOR CHIP	2	(Q,R,S)
Q222-25		2SC3757	TRANSISTOR	4	(Q,R)
			RESISTORS		
R201		ERJ6GEYJ472	M.RESISTOR CH 1/10W 4.7K	1	
R202		ERJ6GEYJ470	M.RESISTOR CH 1/10W 47	1	
R203		ERJ6GEYJ222	M.RESISTOR CH 1/10W 2.2K	1	
R204		ERJ6GEYJ333	M.RESISTOR CH 1/10W 33K	1	
R205		ERJ6GEYJ472	M.RESISTOR CH 1/10W 4.7K	1	
R206-08		ERJ6GEYJ152	M.RESISTOR CH 1/10W 1.5K	3	
R209		ERJ6GEYJ680	M.RESISTOR CH 1/10W 68	1	
R210		ERJ6GEYJ272	M.RESISTOR CH 1/10W 2.7K	1	
R211		ERJ6GEYJ102	M.RESISTOR CH 1/10W 1K	1	
R212		ERJ6GEYJ470	M.RESISTOR CH 1/10W 47	1	
R213		ERJ6GEYJ103	M.RESISTOR CH 1/10W 10K	1	
R214		ERJ6GEYJ470	M.RESISTOR CH 1/10W 47	1	
R215		ERJ6GEYJ103	M.RESISTOR CH 1/10W 10K	1	
R216		ERJ6GEYJ181	M.RESISTOR CH 1/10W 180	1	
R217		ERJ6GEYJ470	M.RESISTOR CH 1/10W 47	1	
R218		ERJ6GEYJ471	M.RESISTOR CH 1/10W 470	1	
R219		ERJ6GEYJ472	M.RESISTOR CH 1/10W 4.7K	1	
R220		ERJ6GEYJ470	M.RESISTOR CH 1/10W 47	1	
R221		ERJ6GEYJ222	M.RESISTOR CH 1/10W 2.2K	1	
R222		ERJ6GEYJ333	M.RESISTOR CH 1/10W 33K	1	
R223		ERJ6GEYJ472	M.RESISTOR CH 1/10W 4.7K	1	
R224-26		ERJ6GEYJ152	M.RESISTOR CH 1/10W 1.5K	3	
R227		ERJ6GEYJ680	M.RESISTOR CH 1/10W 68	1	
R228		ERJ6GEYJ272	M.RESISTOR CH 1/10W 2.7K	1	
R229		ERJ6GEYJ102	M.RESISTOR CH 1/10W 1K	1	
R230		ERJ6GEYJ470	M.RESISTOR CH 1/10W 47	1	
R231		ERJ6GEYJ103	M.RESISTOR CH 1/10W 10K	1	
R232		ERJ6GEYJ470	M.RESISTOR CH 1/10W 47	1	
R233		ERJ6GEYJ103	M.RESISTOR CH 1/10W 10K	1	
R234		ERJ6GEYJ181	M.RESISTOR CH 1/10W 180	1	
R235		ERJ6GEYJ470	M.RESISTOR CH 1/10W 47	1	
R236		ERJ6GEYJ471	M.RESISTOR CH 1/10W 470	1	
R237		ERJ6GEYJ332	M.RESISTOR CH 1/10W 3.3K	1	
R238		ERJ6GEYJ470	M.RESISTOR CH 1/10W 47	1	
R239		ERJ6GEYJ222	M.RESISTOR CH 1/10W 2.2K	1	
R240		ERJ6GEYJ223	M.RESISTOR CH 1/10W 22K	1	
R241		ERJ6GEYJ472	M.RESISTOR CH 1/10W 4.7K	1	
R242-44		ERJ6GEYJ152	M.RESISTOR CH 1/10W 1.5K	3	
R245		ERJ6GEYJ680	M.RESISTOR CH 1/10W 68	1	
R246		ERJ6GEYJ272	M.RESISTOR CH 1/10W 2.7K	1	
R247		ERJ6GEYJ102	M.RESISTOR CH 1/10W 1K	1	
R248		ERJ6GEYJ470	M.RESISTOR CH 1/10W 47	1	
R249		ERJ6GEYJ103	M.RESISTOR CH 1/10W 10K	1	
R250		ERJ6GEYJ470	M.RESISTOR CH 1/10W 47	1	
R251		ERJ6GEYJ103	M.RESISTOR CH 1/10W 10K	1	
R252		ERJ6GEYJ151	M.RESISTOR CH 1/10W 150	1	
R253		ERJ6GEYJ470	M.RESISTOR CH 1/10W 47	1	
R254		ERJ6GEYJ471	M.RESISTOR CH 1/10W 470	1	
R255		ERJ6GEYJ332	M.RESISTOR CH 1/10W 3.3K	1	
R256		ERJ6GEYJ470	M.RESISTOR CH 1/10W 47	1	
R257		ERJ6GEYJ222	M.RESISTOR CH 1/10W 2.2K	1	
R258		ERJ6GEYJ223	M.RESISTOR CH 1/10W 22K	1	
R259		ERJ6GEYJ472	M.RESISTOR CH 1/10W 4.7K	1	
R260-62		ERJ6GEYJ152	M.RESISTOR CH 1/10W 1.5K	3	
R263		ERJ6GEYJ680	M.RESISTOR CH 1/10W 68	1	
R264		ERJ6GEYJ272	M.RESISTOR CH 1/10W 2.7K	1	
R265		ERJ6GEYJ102	M.RESISTOR CH 1/10W 1K	1	
R266		ERJ6GEYJ470	M.RESISTOR CH 1/10W 47	1	
R267		ERJ6GEYJ103	M.RESISTOR CH 1/10W 10K	1	
R268		ERJ6GEYJ470	M.RESISTOR CH 1/10W 47	1	
R269		ERJ6GEYJ103	M.RESISTOR CH 1/10W 10K	1	
R270		ERJ6GEYJ151	M.RESISTOR CH 1/10W 150	1	
R271		ERJ6GEYJ470	M.RESISTOR CH 1/10W 47	1	
R272		ERJ6GEYJ471	M.RESISTOR CH 1/10W 470	1	
R273,74		ERJ6GEYJ392	M.RESISTOR CH 1/10W 3.9K	2	

Ref.No.		Part No.	Part Name & Description	Pcs	Remarks
R275		ERJ6GEYJ222	M.RESISTOR CH 1/10W 2.2K	1	
R276,77		ERDS2TJ102	C.RESISTOR 1/4W 1K	2	
R278-81		ERJ6GEYJ470	M.RESISTOR CH 1/10W 47	4	
RY1-Y4		VSY2039	RELAY	4	
T201,02		VLT0535	TRANSFORMER	2	
T203,04		VLT0536	TRANSFORMER	2	
TP201-04		VJR0582	PACK PIN	4	
			MISCELLANEOUS		
		VJF0004	HOLDER	2	
		VMP0972	P.C.BOARD W/COMPONENT	1	
		VSC2340	SHIELD CASE	1	
		VSC2341	SHIELD CASE	1	
		VSC2342	SHIELD CASE	1	
		XTV3+6F	SCREW	2	
	■	VEP85015C	P.C.BOARD W/COMPONENT		FOR AU-63-P
			RA & HA		
			CAPACITORS		
C201		ECUM1H103KBN	C.CAPACITOR CH 50V 0.01U	1	
C202		ECEA1EU100	E.CAPACITOR 25V 10U	1	
C203		ECUM1H103KBN	C.CAPACITOR CH 50V 0.01U	1	
C204		ECSF0JE106	T.CAPACITOR 6.3V 10U	1	
C205		ECUM1H103KBN	C.CAPACITOR CH 50V 0.01U	1	
C206		ECUM1E104ZFN	C.CAPACITOR CH 25V 0.1U	1	
C207		ECEA1CU470	E.CAPACITOR 16V 47U	1	
C208,09		ECUM1H103KBN	C.CAPACITOR CH 50V 0.01U	2	
C210		ECEA1EU100	E.CAPACITOR 25V 10U	1	
C211		ECUM1H103KBN	C.CAPACITOR CH 50V 0.01U	1	
C212		ECSF0JE106	T.CAPACITOR 6.3V 10U	1	
C213		ECUM1H103KBN	C.CAPACITOR CH 50V 0.01U	1	
C214		ECUM1E104ZFN	C.CAPACITOR CH 25V 0.1U	1	
C215		ECEA1CU470	E.CAPACITOR 16V 47U	1	
C216,17		ECUM1H103KBN	C.CAPACITOR CH 50V 0.01U	2	
C218		ECEA1EU100	E.CAPACITOR 25V 10U	1	
C219		ECUM1H103KBN	C.CAPACITOR CH 50V 0.01U	1	
C220		ECSF0JE106	T.CAPACITOR 6.3V 10U	1	
C221		ECUM1H103KBN	C.CAPACITOR CH 50V 0.01U	1	
C222		ECUM1E104ZFN	C.CAPACITOR CH 25V 0.1U	1	
C223		ECEA1CU470	E.CAPACITOR 16V 47U	1	
C224,25		ECUM1H103KBN	C.CAPACITOR CH 50V 0.01U	2	
C226		ECEA1EU100	E.CAPACITOR 25V 10U	1	
C227		ECUM1H103KBN	C.CAPACITOR CH 50V 0.01U	1	
C228		ECSF0JE106	T.CAPACITOR 6.3V 10U	1	
C229		ECUM1H103KBN	C.CAPACITOR CH 50V 0.01U	1	
C230		ECUM1E104ZFN	C.CAPACITOR CH 25V 0.1U	1	
C231		ECEA1CU470	E.CAPACITOR 16V 47U	1	
C232		ECUM1H103KBN	C.CAPACITOR CH 50V 0.01U	1	
C233,34		ECEA1CU470	E.CAPACITOR 16V 47U	2	
C235,36		ECUM1E104ZFN	C.CAPACITOR CH 25V 0.1U	2	

Refer to the P.C.BOARDS LIST, page 6-1-1, before using this page.

Ref.No.		Part No.	Part Name & Description	Pcs	Remarks
CN81		VJP1511T	CONNECTOR(MALE)	1	
CN83		VJP1233T	CONNECTOR(MALE) 6P	1	
CN84		VJP1233G	CONNECTOR(MALE) 6P	1	
CN85		VJP1233T	CONNECTOR(MALE) 6P	1	
CN86		VJP1233G	CONNECTOR(MALE) 6P	1	
D201		MA151K	DIODE	1	
IC201-04		NJM592M8	IC	4	
IC205		AN78N09	IC	1	
L201-05		VLQEL05F101K	COIL 100UH	5	
Q201		2SC3757	TRANSISTOR	1	(Q,R)
Q202,03		2SK316	TRANSISTOR	2	(Q)
Q204,05		2SC3757	TRANSISTOR	2	(Q,R)
Q206,07		2SK316	TRANSISTOR	2	(Q)
Q208,09		2SC3757	TRANSISTOR	2	(Q,R)
Q210,11		2SK316	TRANSISTOR	2	(Q)
Q212,13		2SC3757	TRANSISTOR	2	(Q,R)
Q214,15		2SK316	TRANSISTOR	2	(Q)
Q216		2SC3757	TRANSISTOR	1	(Q,R)
Q217		2SD602	TRANSISTOR CHIP	1	(Q,R,S)
Q218		UN2213	TRANSISTOR-RESISTOR	1	
Q219		2SB643	TRANSISTOR	1	
Q220,21		2SD602	TRANSISTOR CHIP	2	(Q,R,S)
Q222-25		2SC3757	TRANSISTOR	4	(Q,R)
			RESISTORS		
R201		ERJ6GEYJ472	M.RESISTOR CH 1/10W 4.7K	1	
R202		ERJ6GEYJ470	M.RESISTOR CH 1/10W 47	1	
R203		ERJ6GEYJ222	M.RESISTOR CH 1/10W 2.2K	1	
R204		ERJ6GEYJ333	M.RESISTOR CH 1/10W 33K	1	
R205		ERJ6GEYJ472	M.RESISTOR CH 1/10W 4.7K	1	
R206-08		ERJ6GEYJ152	M.RESISTOR CH 1/10W 1.5K	3	
R209		ERJ6GEYJ680	M.RESISTOR CH 1/10W 68	1	
R210		ERJ6GEYJ272	M.RESISTOR CH 1/10W 2.7K	1	
R211		ERJ6GEYJ102	M.RESISTOR CH 1/10W 1K	1	
R212		ERJ6GEYJ470	M.RESISTOR CH 1/10W 47	1	
R213		ERJ6GEYJ103	M.RESISTOR CH 1/10W 10K	1	
R214		ERJ6GEYJ470	M.RESISTOR CH 1/10W 47	1	
R215		ERJ6GEYJ103	M.RESISTOR CH 1/10W 10K	1	
R216		ERJ6GEYJ151	M.RESISTOR CH 1/10W 150	1	
R217		ERJ6GEYJ470	M.RESISTOR CH 1/10W 47	1	
R218		ERJ6GEYJ471	M.RESISTOR CH 1/10W 470	1	
R219		ERJ6GEYJ472	M.RESISTOR CH 1/10W 4.7K	1	
R220		ERJ6GEYJ470	M.RESISTOR CH 1/10W 47	1	
R221		ERJ6GEYJ222	M.RESISTOR CH 1/10W 2.2K	1	
R222		ERJ6GEYJ333	M.RESISTOR CH 1/10W 33K	1	
R223		ERJ6GEYJ472	M.RESISTOR CH 1/10W 4.7K	1	
R224-26		ERJ6GEYJ152	M.RESISTOR CH 1/10W 1.5K	3	
R227		ERJ6GEYJ680	M.RESISTOR CH 1/10W 68	1	
R228		ERJ6GEYJ272	M.RESISTOR CH 1/10W 2.7K	1	
R229		ERJ6GEYJ102	M.RESISTOR CH 1/10W 1K	1	
R230		ERJ6GEYJ470	M.RESISTOR CH 1/10W 47	1	
R231		ERJ6GEYJ103	M.RESISTOR CH 1/10W 10K	1	
R232		ERJ6GEYJ470	M.RESISTOR CH 1/10W 47	1	
R233		ERJ6GEYJ103	M.RESISTOR CH 1/10W 10K	1	
R234		ERJ6GEYJ151	M.RESISTOR CH 1/10W 150	1	
R235		ERJ6GEYJ470	M.RESISTOR CH 1/10W 47	1	
R236		ERJ6GEYJ471	M.RESISTOR CH 1/10W 470	1	
R237		ERJ6GEYJ332	M.RESISTOR CH 1/10W 3.3K	1	
R238		ERJ6GEYJ470	M.RESISTOR CH 1/10W 47	1	
R239		ERJ6GEYJ222	M.RESISTOR CH 1/10W 2.2K	1	
R240		ERJ6GEYJ223	M.RESISTOR CH 1/10W 22K	1	

Ref.No.		Part No.	Part Name & Description	Pcs	Remarks
R241		ERJ6GEYJ472	M.RESISTOR CH 1/10W 4.7K	1	
R242-44		ERJ6GEYJ152	M.RESISTOR CH 1/10W 1.5K	3	
R245		ERJ6GEYJ680	M.RESISTOR CH 1/10W 68	1	
R246		ERJ6GEYJ272	M.RESISTOR CH 1/10W 2.7K	1	
R247		ERJ6GEYJ102	M.RESISTOR CH 1/10W 1K	1	
R248		ERJ6GEYJ470	M.RESISTOR CH 1/10W 47	1	
R249		ERJ6GEYJ103	M.RESISTOR CH 1/10W 10K	1	
R250		ERJ6GEYJ470	M.RESISTOR CH 1/10W 47	1	
R251		ERJ6GEYJ103	M.RESISTOR CH 1/10W 10K	1	
R252		ERJ6GEYJ121	M.RESISTOR CH1/10W 120	1	
R253		ERJ6GEYJ470	M.RESISTOR CH 1/10W 47	1	
R254		ERJ6GEYJ471	M.RESISTOR CH 1/10W 470	1	
R255		ERJ6GEYJ332	M.RESISTOR CH 1/10W 3.3K	1	
R256		ERJ6GEYJ470	M.RESISTOR CH 1/10W 47	1	
R257		ERJ6GEYJ222	M.RESISTOR CH 1/10W 2.2K	1	
R258		ERJ6GEYJ223	M.RESISTOR CH 1/10W 22K	1	
R259		ERJ6GEYJ472	M.RESISTOR CH 1/10W 4.7K	1	
R260-62		ERJ6GEYJ152	M.RESISTOR CH 1/10W 1.5K	3	
R263		ERJ6GEYJ680	M.RESISTOR CH 1/10W 68	1	
R264		ERJ6GEYJ272	M.RESISTOR CH 1/10W 2.7K	1	
R265		ERJ6GEYJ102	M.RESISTOR CH 1/10W 1K	1	
R266		ERJ6GEYJ470	M.RESISTOR CH 1/10W 47	1	
R267		ERJ6GEYJ103	M.RESISTOR CH 1/10W 10K	1	
R268		ERJ6GEYJ470	M.RESISTOR CH 1/10W 47	1	
R269		ERJ6GEYJ103	M.RESISTOR CH 1/10W 10K	1	
R270		ERJ6GEYJ121	M.RESISTOR CH1/10W 120	1	
R271		ERJ6GEYJ470	M.RESISTOR CH 1/10W 47	1	
R272		ERJ6GEYJ471	M.RESISTOR CH 1/10W 470	1	
R273,74		ERJ6GEYJ392	M.RESISTOR CH 1/10W 3.9K	2	
R275		ERJ6GEYJ222	M.RESISTOR CH 1/10W 2.2K	1	
R276,77		ERDS2TJ102	C.RESISTOR 1/4W 1K	2	
R278-81		ERJ6GEYJ470	M.RESISTOR CH 1/10W 47	4	
RY1-Y4		VSY2039	RELAY	4	
T201,02		VLT0535	TRANSFORMER	2	
T203,04		VLT0536	TRANSFORMER	2	
TP201-04		VJR0582	PACK PIN	4	
			MISCELLANEOUS		
		VJF0004	HOLDER	2	
		VMP0972	P.C.B. HOLDER ANGLE	1	
		VSC2340	SHIELD CASE	1	
		VSC2341	SHIELD CASE	1	
		VSC2342	SHIELD CASE	1	
		XTV3+6F	SCREW	2	
	■	VEP85015D	P.C.BOARD - W/COMPONENT RA & HA		FOR AU-65-E,B
			CAPACITORS		
C1		ECEA1HUR33	E.CAPACITOR 50V 0.33U	1	
C2		ECEA1CU100	E.CAPACITOR 16V 10U	1	
C3		ECUM1H103KBN	C.CAPACITOR CH 50V 0.01U	1	
C4		ECEA1HUR33	E.CAPACITOR 50V 0.33U	1	
C5		ECEA1CU100	E.CAPACITOR 16V 10U	1	

Refer to the P.C.BOARDS LIST, page 6-1-1, before using this page.

Ref.No.		Part No.	Part Name & Description	Pcs	Remarks
C6		ECUM1H103KBN	C.CAPACITOR CH 50V 0.01U	1	
C7		ECEA1AU101	E.CAPACITOR 10V 100U	1	
C17		ECEA1AU101	E.CAPACITOR 10V 100U	1	
C27-30		ECUM1E104ZFN	C.CAPACITOR CH 25V 0.1U	4	
C31-39		ECUM1H103KBN	C.CAPACITOR CH 50V 0.01U	9	
C40		ECUM1E104ZFN	C.CAPACITOR CH 25V 0.1U	1	
C41		ECUM1H103KBN	C.CAPACITOR CH 50V 0.01U	1	
C42		ECUM1E104ZFN	C.CAPACITOR CH 25V 0.1U	1	
C43		ECUM1H103KBN	C.CAPACITOR CH 50V 0.01U	1	
C44		ECUM1E104ZFN	C.CAPACITOR CH 25V 0.1U	1	
C45		ECUM1H103KBN	C.CAPACITOR CH 50V 0.01U	1	
C46,47		ECUM1E104ZFN	C.CAPACITOR CH 25V 0.1U	2	
C48		ECUM1H220JCN	C.CAPACITOR CH 50V 22P	1	
C50		ECUM1E104ZFN	C.CAPACITOR CH 25V 0.1U	1	
C51		ECUM1H220JCN	C.CAPACITOR CH 50V 22P	1	
C53		ECUM1E104ZFN	C.CAPACITOR CH 25V 0.1U	1	
C54		ECUM1H220JCN	C.CAPACITOR CH 50V 22P	1	
C56		ECUM1E104ZFN	C.CAPACITOR CH 25V 0.1U	1	
C57		ECUM1H220JCN	C.CAPACITOR CH 50V 22P	1	
C59		ECUM1H103KBN	C.CAPACITOR CH 50V 0.01U	1	
C60		ECEA1AU101	E.CAPACITOR 10V 100U	1	
C61,62		ECUM1E104ZFN	C.CAPACITOR CH 25V 0.1U	2	
C63		ECUM1H103KBN	C.CAPACITOR CH 50V 0.01U	1	
C64		ECEA1AU101	E.CAPACITOR 10V 100U	1	
C65,66		ECUM1E104ZFN	C.CAPACITOR CH 25V 0.1U	2	
C67		ECUM1H103KBN	C.CAPACITOR CH 50V 0.01U	1	
C68		ECEA1AU101	E.CAPACITOR 10V 100U	1	
C69,70		ECUM1E104ZFN	C.CAPACITOR CH 25V 0.1U	2	
C71		ECUM1H103KBN	C.CAPACITOR CH 50V 0.01U	1	
C72		ECEA1AU101	E.CAPACITOR 10V 100U	1	
C73,74		ECUM1E104ZFN	C.CAPACITOR CH 25V 0.1U	2	
C75-78		ECEA1CU470	E.CAPACITOR 16V 47U	4	
C79		ECUM1H103KBN	C.CAPACITOR CH 50V 0.01U	1	
C80		ECEA1EU470	E.CAPACITOR 25V 47U	1	
C81-86		ECCD2H330JC	C.CAPACITOR 500V 33P	6	
C87		ECEA1EU470	E.CAPACITOR 25V 47U	1	
C88		ECUM1H103KBN	C.CAPACITOR CH 50V 0.01U	1	
C201		ECUM1H103KBN	C.CAPACITOR CH 50V 0.01U	1	
C202		ECEA1EU100	E.CAPACITOR 25V 10U	1	
C203		ECUM1H103KBN	C.CAPACITOR CH 50V 0.01U	1	
C204		ECSF0JE106	T.CAPACITOR 6.3V 10U	1	
C205		ECUM1H103KBN	C.CAPACITOR CH 50V 0.01U	1	
C206		ECUM1E104ZFN	C.CAPACITOR CH 25V 0.1U	1	
C207		ECEA1CU470	E.CAPACITOR 16V 47U	1	
C208,09		ECUM1H103KBN	C.CAPACITOR CH 50V 0.01U	2	
C210		ECEA1EU100	E.CAPACITOR 25V 10U	1	
C211		ECUM1H103KBN	C.CAPACITOR CH 50V 0.01U	1	
C212		ECSF0JE106	T.CAPACITOR 6.3V 10U	1	
C213		ECUM1H103KBN	C.CAPACITOR CH 50V 0.01U	1	
C214		ECUM1E104ZFN	C.CAPACITOR CH 25V 0.1U	1	
C215		ECEA1CU470	E.CAPACITOR 16V 47U	1	
C216,17		ECUM1H103KBN	C.CAPACITOR CH 50V 0.01U	2	
C218		ECEA1EU100	E.CAPACITOR 25V 10U	1	
C219		ECUM1H103KBN	C.CAPACITOR CH 50V 0.01U	1	
C220		ECSF0JE106	T.CAPACITOR 6.3V 10U	1	
C221		ECUM1H103KBN	C.CAPACITOR CH 50V 0.01U	1	
C222		ECUM1E104ZFN	C.CAPACITOR CH 25V 0.1U	1	
C223		ECEA1CU470	E.CAPACITOR 16V 47U	1	
C224,25		ECUM1H103KBN	C.CAPACITOR CH 50V 0.01U	2	
C226		ECEA1EU100	E.CAPACITOR 25V 10U	1	
C227		ECUM1H103KBN	C.CAPACITOR CH 50V 0.01U	1	
C228		ECSF0JE106	T.CAPACITOR 6.3V 10U	1	
C229		ECUM1H103KBN	C.CAPACITOR CH 50V 0.01U	1	
C230		ECUM1E104ZFN	C.CAPACITOR CH 25V 0.1U	1	
C231		ECEA1CU470	E.CAPACITOR 16V 47U	1	
C232		ECUM1H103KBN	C.CAPACITOR CH 50V 0.01U	1	
C233,34		ECEA1CU470	E.CAPACITOR 16V 47U	2	
C235,36		ECUM1E104ZFN	C.CAPACITOR CH 25V 0.1U	2	
CN81		VJP1511T	CONNECTOR(MALE)	1	
CN82		VJP1233R	CONNECTOR(MALE) 6P	1	
CN83		VJP1233T	CONNECTOR(MALE) 6P	1	
CN84		VJP1233G	CONNECTOR(MALE) 6P	1	

Ref.No.		Part No.	Part Name & Description	Pcs	Remarks
CN85		VJP1233T	CONNECTOR(MALE) 6P	1	
CN86		VJP1233G	CONNECTOR(MALE) 6P	1	
CN87		VJP1233T	CONNECTOR(MALE) 6P	1	
D201		MA151K	DIODE	1	
IC1		AN78N05	IC	1	
IC2		AN79N05	IC	1	
IC7-C9		AN6308S	IC	3	
IC10		AN6308S	IC	1	
IC11-14		NJM592M8	IC	4	
IC201-04		NJM592M8	IC	4	
IC205		AN78N09	IC	1	
L1-L6		VLQEL05F101K	COIL 100UH	6	
L7-L9		VLQEL05S470K	COIL 47UH	3	
L10		VLQEL05S470K	COIL 47UH	1	
L11,12		VLQEL05F101K	COIL 100UH	2	
L13,14		VLQ0211M2R7	COIL 2.7UH	2	
L201-05		VLQEL05F101K	COIL 100UH	5	
Q5-Q8		2SC2295	TRANSISTOR CHIP	4	(B,C)
Q9		2SC2851	TRANSISTOR	1	
Q10-16		2SC2851	TRANSISTOR	7	
Q17-23		2SB789	TRANSISTOR	7	(Q,R)
Q201		2SC3757	TRANSISTOR	1	(Q,R)
Q202,03		2SK316	TRANSISTOR	2	(Q)
Q204,05		2SC3757	TRANSISTOR	2	(Q,R)
Q206,07		2SK316	TRANSISTOR	2	(Q)
Q208,09		2SC3757	TRANSISTOR	2	(Q,R)
Q210,11		2SK316	TRANSISTOR	2	(Q)
Q212,13		2SC3757	TRANSISTOR	2	(Q,R)
Q214,15		2SK316	TRANSISTOR	2	(Q)
Q216		2SC3757	TRANSISTOR	1	(Q,R)
Q217		2SD602	TRANSISTOR CHIP	1	(Q,R,S)
Q218		UN2213	TRANSISTOR-RESISTOR	1	
Q219		2SB643	TRANSISTOR	1	
Q220,21		2SD602	TRANSISTOR CHIP	2	(Q,R,S)
Q222-25		2SC3757	TRANSISTOR	4	(Q,R)
			RESISTORS		
R8		ERJ6GEYJ750	M.RESISTOR CH 1/10W 75	1	
R16		ERJ6GEYJ750	M.RESISTOR CH 1/10W 75	1	
R21,22		ERJ6GEYJ470	M.RESISTOR CH 1/10W 47	2	
R27,28		ERJ6GEYJ470	M.RESISTOR CH 1/10W 47	2	
R29		ERJ6GEYJ103	M.RESISTOR CH 1/10W 10K	1	
R30		ERJ6GEYJ122	M.RESISTOR CH 1/10W 1.2K	1	
R31		ERJ6GEYJ103	M.RESISTOR CH 1/10W 10K	1	
R32		ERJ6GEYJ122	M.RESISTOR CH 1/10W 1.2K	1	
R33		ERJ6GEYJ103	M.RESISTOR CH 1/10W 10K	1	
R34		ERJ6GEYJ122	M.RESISTOR CH 1/10W 1.2K	1	
R35		ERJ6GEYJ103	M.RESISTOR CH 1/10W 10K	1	
R36		ERJ6GEYJ122	M.RESISTOR CH 1/10W 1.2K	1	
R37		ERJ6GEYJ222	M.RESISTOR CH 1/10W 2.2K	1	
R38		ERJ6GEYJ471	M.RESISTOR CH 1/10W 470	1	
R39		ERJ6GEYJ151	M.RESISTOR CH 1/10W 150	1	
R40		ERJ6GEYJ471	M.RESISTOR CH 1/10W 470	1	
R41		ERJ6GEYJ101	M.RESISTOR CH 1/10W 100	1	
R42		ERJ6GEYJ331	M.RESISTOR CH 1/10W 330	1	
R43,44		ERJ6GEYJ222	M.RESISTOR CH 1/10W 2.2K	2	
R45,46		ERJ6GEYJ470	M.RESISTOR CH 1/10W 47	2	
R47		ERJ6GEYJ222	M.RESISTOR CH 1/10W 2.2K	1	
R48		ERJ6GEYJ471	M.RESISTOR CH 1/10W 470	1	
R49		ERJ6GEYJ151	M.RESISTOR CH 1/10W 150	1	
R50		ERJ6GEYJ471	M.RESISTOR CH 1/10W 470	1	

Refer to the P.C.BOARDS LIST, page 6-1-1, before using this page.

Ref.No.		Part No.	Part Name & Description	Pcs	Remarks
R51		ERJ6GEYJ101	M.RESISTOR CH 1/10W 100	1	
R52		ERJ6GEYJ331	M.RESISTOR CH 1/10W 330	1	
R53,54		ERJ6GEYJ222	M.RESISTOR CH 1/10W 2.2K	2	
R55,56		ERJ6GEYJ470	M.RESISTOR CH 1/10W 47	2	
R57		ERJ6GEYJ222	M.RESISTOR CH 1/10W 2.2K	1	
R58		ERJ6GEYJ471	M.RESISTOR CH 1/10W 470	1	
R59		ERJ6GEYJ151	M.RESISTOR CH 1/10W 150	1	
R60		ERJ6GEYJ471	M.RESISTOR CH 1/10W 470	1	
R61		ERJ6GEYJ101	M.RESISTOR CH 1/10W 100	1	
R62		ERJ6GEYJ331	M.RESISTOR CH 1/10W 330	1	
R63,64		ERJ6GEYJ222	M.RESISTOR CH 1/10W 2.2K	2	
R65,66		ERJ6GEYJ470	M.RESISTOR CH 1/10W 47	2	
R67		ERJ6GEYJ222	M.RESISTOR CH 1/10W 2.2K	1	
R68		ERJ6GEYJ471	M.RESISTOR CH 1/10W 470	1	
R69		ERJ6GEYJ151	M.RESISTOR CH 1/10W 150	1	
R70		ERJ6GEYJ471	M.RESISTOR CH 1/10W 470	1	
R71		ERJ6GEYJ101	M.RESISTOR CH 1/10W 100	1	
R72		ERJ6GEYJ331	M.RESISTOR CH 1/10W 330	1	
R73,74		ERJ6GEYJ222	M.RESISTOR CH 1/10W 2.2K	2	
R75,76		ERJ6GEYJ470	M.RESISTOR CH 1/10W 47	2	
R77		ERJ6GEYJ152	M.RESISTOR CH 1/10W 1.5K	1	
R78		ERJ6GEYJ102	M.RESISTOR CH 1/10W 1K	1	
R79		ERDS2TJ470	C.RESISTOR 1/4W 47	1	
R80		ERJ6GEYJ680	M.RESISTOR CH 1/10W 68	1	
R81		ERDS2TJ470	C.RESISTOR 1/4W 47	1	
R82		ERJ6GEYJ102	M.RESISTOR CH 1/10W 1K	1	
R83		ERJ6GEYJ152	M.RESISTOR CH 1/10W 1.5K	1	
R84		ERJ6GEYJ102	M.RESISTOR CH 1/10W 1K	1	
R85,86		ERJ6GEYJ331	M.RESISTOR CH 1/10W 330	2	
R87		ERJ6GEYJ152	M.RESISTOR CH 1/10W 1.5K	1	
R88		ERJ6GEYJ102	M.RESISTOR CH 1/10W 1K	1	
R89		ERDS2TJ470	C.RESISTOR 1/4W 47	1	
R90		ERJ6GEYJ680	M.RESISTOR CH 1/10W 68	1	
R91		ERDS2TJ470	C.RESISTOR 1/4W 47	1	
R92		ERJ6GEYJ102	M.RESISTOR CH 1/10W 1K	1	
R93		ERJ6GEYJ152	M.RESISTOR CH 1/10W 1.5K	1	
R94		ERJ6GEYJ102	M.RESISTOR CH 1/10W 1K	1	
R95,96		ERJ6GEYJ331	M.RESISTOR CH 1/10W 330	2	
R97		ERJ6GEYJ152	M.RESISTOR CH 1/10W 1.5K	1	
R98		ERJ6GEYJ102	M.RESISTOR CH 1/10W 1K	1	
R99		ERDS2TJ470	C.RESISTOR 1/4W 47	1	
R100		ERJ6GEYJ680	M.RESISTOR CH 1/10W 68	1	
R101		ERDS2TJ470	C.RESISTOR 1/4W 47	1	
R102		ERJ6GEYJ102	M.RESISTOR CH 1/10W 1K	1	
R103		ERJ6GEYJ152	M.RESISTOR CH 1/10W 1.5K	1	
R104		ERJ6GEYJ102	M.RESISTOR CH 1/10W 1K	1	
R105,06		ERJ6GEYJ331	M.RESISTOR CH 1/10W 330	2	
R107		ERJ6GEYJ152	M.RESISTOR CH 1/10W 1.5K	1	
R108		ERJ6GEYJ102	M.RESISTOR CH 1/10W 1K	1	
R109		ERDS2TJ470	C.RESISTOR 1/4W 47	1	
R110		ERJ6GEYJ680	M.RESISTOR CH 1/10W 68	1	
R111		ERDS2TJ470	C.RESISTOR 1/4W 47	1	
R112		ERJ6GEYJ102	M.RESISTOR CH 1/10W 1K	1	
R113		ERJ6GEYJ152	M.RESISTOR CH 1/10W 1.5K	1	
R114		ERJ6GEYJ102	M.RESISTOR CH 1/10W 1K	1	
R115,16		ERJ6GEYJ331	M.RESISTOR CH 1/10W 330	2	
R117		ERJ6GEYJ332	M.RESISTOR CH 1/10W 3.3K	1	
R118		ERJ6GEYJ103	M.RESISTOR CH 1/10W 10K	1	
R119		ERJ6GEYJ182	M.RESISTOR CH 1/10W 1.8K	1	
R120		ERJ6GEYJ472	M.RESISTOR CH 1/10W 4.7K	1	
R121		ERJ8GCJ820	M.RESISTOR CH 1/8W 82	1	
R122,23		ERJ6GEYJ821	M.RESISTOR CH 1/10W 820	2	
R124,25		ERJ6GEYJ332	M.RESISTOR CH 1/10W 3.3K	2	
R126		ERJ6GEYJ103	M.RESISTOR CH 1/10W 10K	1	
R127		ERJ6GEYJ101	M.RESISTOR CH 1/10W 100	1	
R128		ERJ6GEYJ103	M.RESISTOR CH 1/10W 10K	1	
R129		ERJ6GEYJ182	M.RESISTOR CH 1/10W 1.8K	1	
R130		ERJ6GEYJ472	M.RESISTOR CH 1/10W 4.7K	1	
R131		ERJ8GCJ820	M.RESISTOR CH 1/8W 82	1	
R132,33		ERJ6GEYJ821	M.RESISTOR CH 1/10W 820	2	
R134,35		ERJ6GEYJ332	M.RESISTOR CH 1/10W 3.3K	2	
R136		ERJ6GEYJ103	M.RESISTOR CH 1/10W 10K	1	
R137		ERJ6GEYJ101	M.RESISTOR CH 1/10W 100	1	
R138		ERJ6GEYJ103	M.RESISTOR CH 1/10W 10K	1	
R201		ERJ6GEYJ472	M.RESISTOR CH 1/10W 4.7K	1	

Ref.No.		Part No.	Part Name & Description	Pcs	Remarks
R202		ERJ6GEYJ470	M.RESISTOR CH 1/10W 47	1	
R203		ERJ6GEYJ222	M.RESISTOR CH 1/10W 2.2K	1	
R204		ERJ6GEYJ333	M.RESISTOR CH 1/10W 33K	1	
R205		ERJ6GEYJ472	M.RESISTOR CH 1/10W 4.7K	1	
R206-08		ERJ6GEYJ152	M.RESISTOR CH 1/10W 1.5K	3	
R209		ERJ6GEYJ680	M.RESISTOR CH 1/10W 68	1	
R210		ERJ6GEYJ272	M.RESISTOR CH 1/10W 2.7K	1	
R211		ERJ6GEYJ102	M.RESISTOR CH 1/10W 1K	1	
R212		ERJ6GEYJ470	M.RESISTOR CH 1/10W 47	1	
R213		ERJ6GEYJ103	M.RESISTOR CH 1/10W 10K	1	
R214		ERJ6GEYJ470	M.RESISTOR CH 1/10W 47	1	
R215		ERJ6GEYJ103	M.RESISTOR CH 1/10W 10K	1	
R216		ERJ6GEYJ151	M.RESISTOR CH 1/10W 150	1	
R217		ERJ6GEYJ470	M.RESISTOR CH 1/10W 47	1	
R218		ERJ6GEYJ471	M.RESISTOR CH 1/10W 470	1	
R219		ERJ6GEYJ472	M.RESISTOR CH 1/10W 4.7K	1	
R220		ERJ6GEYJ470	M.RESISTOR CH 1/10W 47	1	
R221		ERJ6GEYJ222	M.RESISTOR CH 1/10W 2.2K	1	
R222		ERJ6GEYJ333	M.RESISTOR CH 1/10W 33K	1	
R223		ERJ6GEYJ472	M.RESISTOR CH 1/10W 4.7K	1	
R224-26		ERJ6GEYJ152	M.RESISTOR CH 1/10W 1.5K	3	
R227		ERJ6GEYJ680	M.RESISTOR CH 1/10W 68	1	
R228		ERJ6GEYJ272	M.RESISTOR CH 1/10W 2.7K	1	
R229		ERJ6GEYJ102	M.RESISTOR CH 1/10W 1K	1	
R230		ERJ6GEYJ470	M.RESISTOR CH 1/10W 47	1	
R231		ERJ6GEYJ103	M.RESISTOR CH 1/10W 10K	1	
R232		ERJ6GEYJ470	M.RESISTOR CH 1/10W 47	1	
R233		ERJ6GEYJ103	M.RESISTOR CH 1/10W 10K	1	
R234		ERJ6GEYJ151	M.RESISTOR CH 1/10W 150	1	
R235		ERJ6GEYJ470	M.RESISTOR CH 1/10W 47	1	
R236		ERJ6GEYJ471	M.RESISTOR CH 1/10W 470	1	
R237		ERJ6GEYJ472	M.RESISTOR CH 1/10W 4.7K	1	
R238		ERJ6GEYJ470	M.RESISTOR CH 1/10W 47	1	
R239		ERJ6GEYJ222	M.RESISTOR CH 1/10W 2.2K	1	
R240		ERJ6GEYJ333	M.RESISTOR CH 1/10W 33K	1	
R241		ERJ6GEYJ472	M.RESISTOR CH 1/10W 4.7K	1	
R242-44		ERJ6GEYJ152	M.RESISTOR CH 1/10W 1.5K	3	
R245		ERJ6GEYJ680	M.RESISTOR CH 1/10W 68	1	
R246		ERJ6GEYJ272	M.RESISTOR CH 1/10W 2.7K	1	
R247		ERJ6GEYJ102	M.RESISTOR CH 1/10W 1K	1	
R248		ERJ6GEYJ470	M.RESISTOR CH 1/10W 47	1	
R249		ERJ6GEYJ103	M.RESISTOR CH 1/10W 10K	1	
R250		ERJ6GEYJ470	M.RESISTOR CH 1/10W 47	1	
R251		ERJ6GEYJ103	M.RESISTOR CH 1/10W 10K	1	
R252		ERJ6GEYJ121	M.RESISTOR CH 1/10W 120	1	
R253		ERJ6GEYJ470	M.RESISTOR CH 1/10W 47	1	
R254		ERJ6GEYJ471	M.RESISTOR CH 1/10W 470	1	
R255		ERJ6GEYJ472	M.RESISTOR CH 1/10W 4.7K	1	
R256		ERJ6GEYJ470	M.RESISTOR CH 1/10W 47	1	
R257		ERJ6GEYJ222	M.RESISTOR CH 1/10W 2.2K	1	
R258		ERJ6GEYJ333	M.RESISTOR CH 1/10W 33K	1	
R259		ERJ6GEYJ472	M.RESISTOR CH 1/10W 4.7K	1	
R260-62		ERJ6GEYJ152	M.RESISTOR CH 1/10W 1.5K	3	
R263		ERJ6GEYJ680	M.RESISTOR CH 1/10W 68	1	
R264		ERJ6GEYJ272	M.RESISTOR CH 1/10W 2.7K	1	
R265		ERJ6GEYJ102	M.RESISTOR CH 1/10W 1K	1	
R266		ERJ6GEYJ470	M.RESISTOR CH 1/10W 47	1	
R267		ERJ6GEYJ103	M.RESISTOR CH 1/10W 10K	1	
R268		ERJ6GEYJ470	M.RESISTOR CH 1/10W 47	1	
R269		ERJ6GEYJ103	M.RESISTOR CH 1/10W 10K	1	
R270		ERJ6GEYJ121	M.RESISTOR CH 1/10W 120	1	
R271		ERJ6GEYJ470	M.RESISTOR CH 1/10W 47	1	
R272		ERJ6GEYJ471	M.RESISTOR CH 1/10W 470	1	
R273,74		ERJ6GEYJ392	M.RESISTOR CH 1/10W 3.9K	2	
R275		ERJ6GEYJ222	M.RESISTOR CH 1/10W 2.2K	1	
R276,77		ERDS2TJ102	C.RESISTOR 1/4W 1K	2	
R278-81		ERJ6GEYJ470	M.RESISTOR CH 1/10W 47	4	
RY1-Y4		VSY2039	RELAY	4	
T1-T6		EIR7QE018B	TRANSFORMER	6	

Refer to the P.C.BOARDS LIST, page 6-1-1, before using this page.

Ref.No.		Part No.	Part Name & Description	Pcs	Remarks
T201,02		VLT0535	TRANSFORMER	2	
T203,04		VLT0536	TRANSFORMER	2	
TP1-P8		VJR0646	TEST POINT	8	
TP201-04		VJR0646	TEST POINT	4	
TPG1-G3		VJR0646	TEST POINT	3	
VC1-C4		VCV0031	TRIMMER	4	
VR3-R6		VRV0064B102	V.RESISTOR 1K	4	
			MISCELLANEOUS		
		VJF0004	CLAMPER	2	
		VMP0972	P.C.B. HOLDER ANGLE	1	
		VSC2340	SHIELD CASE	1	
		VSC2341	SHIELD CASE	1	
		VSC2342	SHIELD CASE	1	
		XTV3+6F	SCREW	2	
	■	VEP85015E	P.C.BOARD W/COMPONENT		FOR AU-62-E,B
			RA & HA		
			CAPACITORS		
C201		ECUM1H103KBN	C.CAPACITOR CH 50V 0.01U	1	
C202		ECEA1EU100	E.CAPACITOR 25V 10U	1	
C203		ECUM1H103KBN	C.CAPACITOR CH 50V 0.01U	1	
C204		ECSF0JE106	T.CAPACITOR 6.3V 10U	1	
C205		ECUM1H103KBN	C.CAPACITOR CH 50V 0.01U	1	
C206		ECUM1E104ZFN	C.CAPACITOR CH 25V 0.1U	1	
C207		ECEA1CU470	E.CAPACITOR 16V 47U	1	
C208,09		ECUM1H103KBN	C.CAPACITOR CH 50V 0.01U	2	
C210		ECEA1EU100	E.CAPACITOR 25V 10U	1	
C211		ECUM1H103KBN	C.CAPACITOR CH 50V 0.01U	1	
C212		ECSF0JE106	T.CAPACITOR 6.3V 10U	1	
C213		ECUM1H103KBN	C.CAPACITOR CH 50V 0.01U	1	
C214		ECUM1E104ZFN	C.CAPACITOR CH 25V 0.1U	1	
C215		ECEA1CU470	E.CAPACITOR 16V 47U	1	
C216,17		ECUM1H103KBN	C.CAPACITOR CH 50V 0.01U	2	
C218		ECEA1EU100	E.CAPACITOR 25V 10U	1	
C219		ECUM1H103KBN	C.CAPACITOR CH 50V 0.01U	1	
C220		ECSF0JE106	T.CAPACITOR 6.3V 10U	1	
C221		ECUM1H103KBN	C.CAPACITOR CH 50V 0.01U	1	
C222		ECUM1E104ZFN	C.CAPACITOR CH 25V 0.1U	1	
C223		ECEA1CU470	E.CAPACITOR 16V 47U	1	
C224,25		ECUM1H103KBN	C.CAPACITOR CH 50V 0.01U	2	
C226		ECEA1EU100	E.CAPACITOR 25V 10U	1	
C227		ECUM1H103KBN	C.CAPACITOR CH 50V 0.01U	1	
C228		ECSF0JE106	T.CAPACITOR 6.3V 10U	1	
C229		ECUM1H103KBN	C.CAPACITOR CH 50V 0.01U	1	
C230		ECUM1E104ZFN	C.CAPACITOR CH 25V 0.1U	1	
C231		ECEA1CU470	E.CAPACITOR 16V 47U	1	
C232		ECUM1H103KBN	C.CAPACITOR CH 50V 0.01U	1	
C233,34		ECEA1CU470	E.CAPACITOR 16V 47U	2	
C235,36		ECUM1E104ZFN	C.CAPACITOR CH 25V 0.1U	2	

Ref.No.		Part No.	Part Name & Description	Pcs	Remarks
CN81		VJP1511T	CONNECTOR(MALE)	1	
CN83		VJP1233T	CONNECTOR(MALE) 6P	1	
CN84		VJP1233G	CONNECTOR(MALE) 6P	1	
CN85		VJP1233T	CONNECTOR(MALE) 6P	1	
CN86		VJP1233G	CONNECTOR(MALE) 6P	1	
D201		MA151K	DIODE	1	
IC201-04		NJM592M8	IC	4	
IC205		AN78N09	IC	1	
L201-05		VLQEL05F101K	COIL 100UH	5	
Q201		2SC3757	TRANSISTOR	1	(Q,R)
Q202,03		2SK316	TRANSISTOR	2	(Q)
Q204,05		2SC3757	TRANSISTOR	2	(Q,R)
Q206,07		2SK316	TRANSISTOR	2	(Q)
Q208,09		2SC3757	TRANSISTOR	2	(Q,R)
Q210,11		2SK316	TRANSISTOR	2	(Q)
Q212,13		2SC3757	TRANSISTOR	2	(Q,R)
Q214,15		2SK316	TRANSISTOR	2	(Q)
Q216		2SC3757	TRANSISTOR	1	(Q,R)
Q217		2SD602	TRANSISTOR CHIP	1	(Q,R,S)
Q218		UN2213	TRANSISTOR-RESISTOR	1	
Q219		2SB643	TRANSISTOR	1	
Q220,21		2SD602	TRANSISTOR CHIP	2	(Q,R,S)
Q222-25		2SC3757	TRANSISTOR	4	(Q,R)
			RESISTORS		
R201		ERJ6GEYJ472	M.RESISTOR CH 1/10W 4.7K	1	
R202		ERJ6GEYJ470	M.RESISTOR CH 1/10W 47	1	
R203		ERJ6GEYJ222	M.RESISTOR CH 1/10W 2.2K	1	
R204		ERJ6GEYJ333	M.RESISTOR CH 1/10W 33K	1	
R205		ERJ6GEYJ472	M.RESISTOR CH 1/10W 4.7K	1	
R206-08		ERJ6GEYJ152	M.RESISTOR CH 1/10W 1.5K	3	
R209		ERJ6GEYJ680	M.RESISTOR CH 1/10W 68	1	
R210		ERJ6GEYJ272	M.RESISTOR CH 1/10W 2.7K	1	
R211		ERJ6GEYJ102	M.RESISTOR CH 1/10W 1K	1	
R212		ERJ6GEYJ470	M.RESISTOR CH 1/10W 47	1	
R213		ERJ6GEYJ103	M.RESISTOR CH 1/10W 10K	1	
R214		ERJ6GEYJ470	M.RESISTOR CH 1/10W 47	1	
R215		ERJ6GEYJ103	M.RESISTOR CH 1/10W 10K	1	
R216		ERJ6GEYJ151	M.RESISTOR CH 1/10W 150	1	
R217		ERJ6GEYJ470	M.RESISTOR CH 1/10W 47	1	
R218		ERJ6GEYJ471	M.RESISTOR CH 1/10W 470	1	
R219		ERJ6GEYJ472	M.RESISTOR CH 1/10W 4.7K	1	
R220		ERJ6GEYJ470	M.RESISTOR CH 1/10W 47	1	
R221		ERJ6GEYJ222	M.RESISTOR CH 1/10W 2.2K	1	
R222		ERJ6GEYJ333	M.RESISTOR CH 1/10W 33K	1	
R223		ERJ6GEYJ472	M.RESISTOR CH 1/10W 4.7K	1	
R224-26		ERJ6GEYJ152	M.RESISTOR CH 1/10W 1.5K	3	
R227		ERJ6GEYJ680	M.RESISTOR CH 1/10W 68	1	
R228		ERJ6GEYJ272	M.RESISTOR CH 1/10W 2.7K	1	
R229		ERJ6GEYJ102	M.RESISTOR CH 1/10W 1K	1	
R230		ERJ6GEYJ470	M.RESISTOR CH 1/10W 47	1	
R231		ERJ6GEYJ103	M.RESISTOR CH 1/10W 10K	1	
R232		ERJ6GEYJ470	M.RESISTOR CH 1/10W 47	1	
R233		ERJ6GEYJ103	M.RESISTOR CH 1/10W 10K	1	
R234		ERJ6GEYJ151	M.RESISTOR CH 1/10W 150	1	
R235		ERJ6GEYJ470	M.RESISTOR CH 1/10W 47	1	
R236		ERJ6GEYJ471	M.RESISTOR CH 1/10W 470	1	
R237		ERJ6GEYJ472	M.RESISTOR CH 1/10W 4.7K	1	
R238		ERJ6GEYJ470	M.RESISTOR CH 1/10W 47	1	
R239		ERJ6GEYJ222	M.RESISTOR CH 1/10W 2.2K	1	
R240		ERJ6GEYJ333	M.RESISTOR CH 1/10W 33K	1	

Refer to the P.C.BOARDS LIST, page 6-1-1, before using this page.

Ref.No.		Part No.	Part Name & Description	Pcs	Remarks
R241		ERJ6GEYJ472	M.RESISTOR CH 1/10W 4.7K	1	
R242-44		ERJ6GEYJ152	M.RESISTOR CH 1/10W 1.5K	3	
R245		ERJ6GEYJ680	M.RESISTOR CH 1/10W 68	1	
R246		ERJ6GEYJ272	M.RESISTOR CH 1/10W 2.7K	1	
R247		ERJ6GEYJ102	M.RESISTOR CH 1/10W 1K	1	
R248		ERJ6GEYJ470	M.RESISTOR CH 1/10W 47	1	
R249		ERJ6GEYJ103	M.RESISTOR CH 1/10W 10K	1	
R250		ERJ6GEYJ470	M.RESISTOR CH 1/10W 47	1	
R251		ERJ6GEYJ103	M.RESISTOR CH 1/10W 10K	1	
R252		ERJ6GEYJ121	M.RESISTOR CH 1/10W 120	1	
R253		ERJ6GEYJ470	M.RESISTOR CH 1/10W 47	1	
R254		ERJ6GEYJ471	M.RESISTOR CH 1/10W 470	1	
R255		ERJ6GEYJ472	M.RESISTOR CH 1/10W 4.7K	1	
R256		ERJ6GEYJ470	M.RESISTOR CH 1/10W 47	1	
R257		ERJ6GEYJ222	M.RESISTOR CH 1/10W 2.2K	1	
R258		ERJ6GEYJ333	M.RESISTOR CH 1/10W 33K	1	
R259		ERJ6GEYJ472	M.RESISTOR CH 1/10W 4.7K	1	
R260-62		ERJ6GEYJ152	M.RESISTOR CH 1/10W 1.5K	3	
R263		ERJ6GEYJ680	M.RESISTOR CH 1/10W 68	1	
R264		ERJ6GEYJ272	M.RESISTOR CH 1/10W 2.7K	1	
R265		ERJ6GEYJ102	M.RESISTOR CH 1/10W 1K	1	
R266		ERJ6GEYJ470	M.RESISTOR CH 1/10W 47	1	
R267		ERJ6GEYJ103	M.RESISTOR CH 1/10W 10K	1	
R268		ERJ6GEYJ470	M.RESISTOR CH 1/10W 47	1	
R269		ERJ6GEYJ103	M.RESISTOR CH 1/10W 10K	1	
R270		ERJ6GEYJ121	M.RESISTOR CH 1/10W 120	1	
R271		ERJ6GEYJ470	M.RESISTOR CH 1/10W 47	1	
R272		ERJ6GEYJ471	M.RESISTOR CH 1/10W 470	1	
R273,74		ERJ6GEYJ392	M.RESISTOR CH 1/10W 3.9K	2	
R275		ERJ6GEYJ222	M.RESISTOR CH 1/10W 2.2K	1	
R276,77		ERDS2TJ102	C.RESISTOR 1/4W 1K	2	
R278-81		ERJ6GEYJ470	M.RESISTOR CH 1/10W 47	4	
RY1-Y4		VSY2039	RELAY	4	
T201,02		VLT0535	TRANSFORMER	2	
T203,04		VLT0536	TRANSFORMER	2	
TP201-04		VJR0646	TEST POINT	4	
			MISCELLANEOUS		
		VJF0004	HOLDER	2	
		VMP0972	P.C.B. HOLDER ANGLE	1	
		VSC2340	SHIELD CASE	1	
		VSC2341	SHIELD CASE	1	
		VSC2342	SHIELD CASE	1	
		XTV3+6F	SCREW	2	
	■	VEP85015F	P.C.BOARD W/COMPONENT		FOR AU-63-E,B
			RA & HA		
			CAPACITORS		
C201		ECUM1H103KBN	C.CAPACITOR CH 50V 0.01U	1	
C202		ECEA1EU100	E.CAPACITOR 25V 10U	1	
C203		ECUM1H103KBN	C.CAPACITOR CH 50V 0.01U	1	
C204		ECSF0JE106	T.CAPACITOR 6.3V 10U	1	
C205		ECUM1H103KBN	C.CAPACITOR CH 50V 0.01U	1	

Ref.No.		Part No.	Part Name & Description	Pcs	Remarks
C206		ECUM1E104ZFN	C.CAPACITOR CH 25V 0.1U	1	
C207		ECEA1CU470	E.CAPACITOR 16V 47U	1	
C208,09		ECUM1H103KBN	C.CAPACITOR CH 50V 0.01U	2	
C210		ECEA1EU100	E.CAPACITOR 25V 10U	1	
C211		ECUM1H103KBN	C.CAPACITOR CH 50V 0.01U	1	
C212		ECSF0JE106	T.CAPACITOR 6.3V 10U	1	
C213		ECUM1H103KBN	C.CAPACITOR CH 50V 0.01U	1	
C214		ECUM1E104ZFN	C.CAPACITOR CH 25V 0.1U	1	
C215		ECEA1CU470	E.CAPACITOR 16V 47U	1	
C216,17		ECUM1H103KBN	C.CAPACITOR CH 50V 0.01U	2	
C218		ECEA1EU100	E.CAPACITOR 25V 10U	1	
C219		ECUM1H103KBN	C.CAPACITOR CH 50V 0.01U	1	
C220		ECSF0JE106	T.CAPACITOR 6.3V 10U	1	
C221		ECUM1H103KBN	C.CAPACITOR CH 50V 0.01U	1	
C222		ECUM1E104ZFN	C.CAPACITOR CH 25V 0.1U	1	
C223		ECEA1CU470	E.CAPACITOR 16V 47U	1	
C224,25		ECUM1H103KBN	C.CAPACITOR CH 50V 0.01U	2	
C226		ECEA1EU100	E.CAPACITOR 25V 10U	1	
C227		ECUM1H103KBN	C.CAPACITOR CH 50V 0.01U	1	
C228		ECSF0JE106	T.CAPACITOR 6.3V 10U	1	
C229		ECUM1H103KBN	C.CAPACITOR CH 50V 0.01U	1	
C230		ECUM1E104ZFN	C.CAPACITOR CH 25V 0.1U	1	
C231		ECEA1CU470	E.CAPACITOR 16V 47U	1	
C232		ECUM1H103KBN	C.CAPACITOR CH 50V 0.01U	1	
C233,34		ECEA1CU470	E.CAPACITOR 16V 47U	2	
C235,36		ECUM1E104ZFN	C.CAPACITOR CH 25V 0.1U	2	
CN81		VJP1511T	CONNECTOR(MALE)	1	
CN83		VJP1233T	CONNECTOR(MALE) 6P	1	
CN84		VJP1233G	CONNECTOR(MALE) 6P	1	
CN85		VJP1233T	CONNECTOR(MALE) 6P	1	
CN86		VJP1233G	CONNECTOR(MALE) 6P	1	
D201		MA151K	DIODE	1	
IC201-04		NJM592M8	IC	4	
IC205		AN78N09	IC	1	
L201-05		VLQEL05F101K	COIL 100UH	5	
Q201		2SC3757	TRANSISTOR	1	(Q,R)
Q202,03		2SK316	TRANSISTOR	2	(Q)
Q204,05		2SC3757	TRANSISTOR	2	(Q,R)
Q206,07		2SK316	TRANSISTOR	2	(Q)
Q208,09		2SC3757	TRANSISTOR	2	(Q,R)
Q210,11		2SK316	TRANSISTOR	2	(Q)
Q212,13		2SC3757	TRANSISTOR	2	(Q,R)
Q214,15		2SK316	TRANSISTOR	2	(Q)
Q216		2SC3757	TRANSISTOR	1	(Q,R)
Q217		2SD602	TRANSISTOR CHIP	1	(Q,R,S)
Q218		UN2213	TRANSISTOR-RESISTOR	1	
Q219		2SB643	TRANSISTOR	1	
Q220,21		2SD602	TRANSISTOR CHIP	2	(Q,R,S)
Q222-25		2SC3757	TRANSISTOR	4	(Q,R)
			RESISTORS		
R201		ERJ6GEYJ472	M.RESISTOR CH 1/10W 4.7K	1	
R202		ERJ6GEYJ470	M.RESISTOR CH 1/10W 47	1	
R203		ERJ6GEYJ222	M.RESISTOR CH 1/10W 2.2K	1	
R204		ERJ6GEYJ333	M.RESISTOR CH 1/10W 33K	1	
R205		ERJ6GEYJ472	M.RESISTOR CH 1/10W 4.7K	1	
R206-08		ERJ6GEYJ152	M.RESISTOR CH 1/10W 1.5K	3	
R209		ERJ6GEYJ680	M.RESISTOR CH 1/10W 68	1	

Refer to the P.C.BOARDS LIST, page 6-1-1, before using this page.

Ref.No.		Part No.	Part Name & Description	Pcs	Remarks
R210		ERJ6GEYJ272	M.RESISTOR CH 1/10W 2.7K	1	
R211		ERJ6GEYJ102	M.RESISTOR CH 1/10W 1K	1	
R212		ERJ6GEYJ470	M.RESISTOR CH 1/10W 47	1	
R213		ERJ6GEYJ103	M.RESISTOR CH 1/10W 10K	1	
R214		ERJ6GEYJ470	M.RESISTOR CH 1/10W 47	1	
R215		ERJ6GEYJ103	M.RESISTOR CH 1/10W 10K	1	
R216		ERJ6GEYJ151	M.RESISTOR CH 1/10W 150	1	
R217		ERJ6GEYJ470	M.RESISTOR CH 1/10W 47	1	
R218		ERJ6GEYJ471	M.RESISTOR CH 1/10W 470	1	
R219		ERJ6GEYJ472	M.RESISTOR CH 1/10W 4.7K	1	
R220		ERJ6GEYJ470	M.RESISTOR CH 1/10W 47	1	
R221		ERJ6GEYJ222	M.RESISTOR CH 1/10W 2.2K	1	
R222		ERJ6GEYJ333	M.RESISTOR CH 1/10W 33K	1	
R223		ERJ6GEYJ472	M.RESISTOR CH 1/10W 4.7K	1	
R224-26		ERJ6GEYJ152	M.RESISTOR CH 1/10W 1.5K	3	
R227		ERJ6GEYJ680	M.RESISTOR CH 1/10W 68	1	
R228		ERJ6GEYJ272	M.RESISTOR CH 1/10W 2.7K	1	
R229		ERJ6GEYJ102	M.RESISTOR CH 1/10W 1K	1	
R230		ERJ6GEYJ470	M.RESISTOR CH 1/10W 47	1	
R231		ERJ6GEYJ103	M.RESISTOR CH 1/10W 10K	1	
R232		ERJ6GEYJ470	M.RESISTOR CH 1/10W 47	1	
R233		ERJ6GEYJ103	M.RESISTOR CH 1/10W 10K	1	
R234		ERJ6GEYJ151	M.RESISTOR CH 1/10W 150	1	
R235		ERJ6GEYJ470	M.RESISTOR CH 1/10W 47	1	
R236		ERJ6GEYJ471	M.RESISTOR CH 1/10W 470	1	
R237		ERJ6GEYJ472	M.RESISTOR CH 1/10W 4.7K	1	
R238		ERJ6GEYJ470	M.RESISTOR CH 1/10W 47	1	
R239		ERJ6GEYJ222	M.RESISTOR CH 1/10W 2.2K	1	
R240		ERJ6GEYJ333	M.RESISTOR CH 1/10W 33K	1	
R241		ERJ6GEYJ472	M.RESISTOR CH 1/10W 4.7K	1	
R242-44		ERJ6GEYJ152	M.RESISTOR CH 1/10W 1.5K	3	
R245		ERJ6GEYJ680	M.RESISTOR CH 1/10W 68	1	
R246		ERJ6GEYJ272	M.RESISTOR CH 1/10W 2.7K	1	
R247		ERJ6GEYJ102	M.RESISTOR CH 1/10W 1K	1	
R248		ERJ6GEYJ470	M.RESISTOR CH 1/10W 47	1	
R249		ERJ6GEYJ103	M.RESISTOR CH 1/10W 10K	1	
R250		ERJ6GEYJ470	M.RESISTOR CH 1/10W 47	1	
R251		ERJ6GEYJ103	M.RESISTOR CH 1/10W 10K	1	
R252		ERJ6GEYJ121	M.RESISTOR CH 1/10W 120	1	
R253		ERJ6GEYJ470	M.RESISTOR CH 1/10W 47	1	
R254		ERJ6GEYJ471	M.RESISTOR CH 1/10W 470	1	
R255		ERJ6GEYJ472	M.RESISTOR CH 1/10W 4.7K	1	
R256		ERJ6GEYJ470	M.RESISTOR CH 1/10W 47	1	
R257		ERJ6GEYJ222	M.RESISTOR CH 1/10W 2.2K	1	
R258		ERJ6GEYJ333	M.RESISTOR CH 1/10W 33K	1	
R259		ERJ6GEYJ472	M.RESISTOR CH 1/10W 4.7K	1	
R260-62		ERJ6GEYJ152	M.RESISTOR CH 1/10W 1.5K	3	
R263		ERJ6GEYJ680	M.RESISTOR CH 1/10W 68	1	
R264		ERJ6GEYJ272	M.RESISTOR CH 1/10W 2.7K	1	
R265		ERJ6GEYJ102	M.RESISTOR CH 1/10W 1K	1	
R266		ERJ6GEYJ470	M.RESISTOR CH 1/10W 47	1	
R267		ERJ6GEYJ103	M.RESISTOR CH 1/10W 10K	1	
R268		ERJ6GEYJ470	M.RESISTOR CH 1/10W 47	1	
R269		ERJ6GEYJ103	M.RESISTOR CH 1/10W 10K	1	
R270		ERJ6GEYJ121	M.RESISTOR CH 1/10W 120	1	
R271		ERJ6GEYJ470	M.RESISTOR CH 1/10W 47	1	
R272		ERJ6GEYJ471	M.RESISTOR CH 1/10W 470	1	
R273,74		ERJ6GEYJ392	M.RESISTOR CH 1/10W 3.9K	2	
R275		ERJ6GEYJ222	M.RESISTOR CH 1/10W 2.2K	1	
R276,77		ERDS2TJ102	C.RESISTOR 1/4W 1K	2	
R278-81		ERJ6GEYJ470	M.RESISTOR CH 1/10W 47	4	
RY1-Y4		VSY2039	RELAY	4	
T201,02		VLT0535	TRANSFORMER	2	
T203,04		VLT0536	TRANSFORMER	2	
TP201-04		VJR0646	TEST POINT	4	

Ref.No.		Part No.	Part Name & Description	Pcs	Remarks
			MISCELLANEOUS		
		VJF0004	COAMPER	2	
		VMP0972	P.C.B. HOLDER ANGLE	1	
		VSC2340	SHIELD CASE	1	
		VSC2341	SHIELD CASE	1	
	■	VEP00E27C	P.C.BOARD W/COMPONENT		
			TR SENSOR (1)		
			MISCELLANEOUS		
		ON1110-R	PHOTO INTERRUPTER	1	
	■	VEP00E28C	P.C.BOARD W/COMPONENT		
			TR SENSOR (2)		
			MISCELLANEOUS		
		ON1110-R	PHOTO INTERRUPTER	1	
	■	VEP00E25C	P.C.BOARD W/COMPONENT		
			UNLOADING PHOTO		
			MISCELLANEOUS		
		ON1110-R	PHOTO INTERRUPTER	1	
	■	VEP83097A	P.C.BOARD W/COMPONENT		FOR AU-65-P
			VIDEO IN/OUT		
			CAPACITORS		
C1		ECUM1H103KBN	C.CAPACITOR CH 50V 0.01U	1	
C2		ECEA1CKG470	E.CAPACITOR 16V 47U	1	
C3		ECUM1H103KBN	C.CAPACITOR CH 50V 0.01U	1	
C4		ECEA1CKG470	E.CAPACITOR 16V 47U	1	
C5-C8		ECUM1H103KBN	C.CAPACITOR CH 50V 0.01U	4	
C101		ECEA1CKG470	E.CAPACITOR 16V 47U	1	
C102		ECUM1H103KBN	C.CAPACITOR CH 50V 0.01U	1	
C103		ECEA1CU101	E.CAPACITOR 16V 100U	1	
C104		ECUM1H103KBN	C.CAPACITOR CH 50V 0.01U	1	
C105		ECUM1H101JCN	C.CAPACITOR CH 50V 100P	1	
C106,07		ECUM1H270JCN	C.CAPACITOR CH 50V 27P	2	
C108		ECUM1H101JCN	C.CAPACITOR CH 50V 100P	1	
C109		ECUM1H270JCN	C.CAPACITOR CH 50V 27P	1	
C110		ECUM1H101JCN	C.CAPACITOR CH 50V 100P	1	
C111		ECUM1H270JCN	C.CAPACITOR CH 50V 27P	1	
C112		ECUM1H103KBN	C.CAPACITOR CH 50V 0.01U	1	
C113		ECUM1H101JCN	C.CAPACITOR CH 50V 100P	1	
C114		ECUM1H270JCN	C.CAPACITOR CH 50V 27P	1	
C115		ECEA1CKG470	E.CAPACITOR 16V 47U	1	
C116		ECUM1H103KBN	C.CAPACITOR CH 50V 0.01U	1	

Refer to the *P.C.BOARDS LIST*, page 6-1-1, before using this page.

Ref.No.		Part No.	Part Name & Description	Pcs	Remarks
C117		ECEA1CU101	E.CAPACITOR 16V 100U	1	
C118		ECUM1H103KBN	C.CAPACITOR CH 50V 0.01U	1	
C119		ECUM1H101JCN	C.CAPACITOR CH 50V 100P	1	
C120		ECUM1H270JCN	C.CAPACITOR CH 50V 27P	1	
C121		ECUM1H101JCN	C.CAPACITOR CH 50V 100P	1	
C122		ECUM1H270JCN	C.CAPACITOR CH 50V 27P	1	
C123		ECUM1H101JCN	C.CAPACITOR CH 50V 100P	1	
C124		ECUM1H270JCN	C.CAPACITOR CH 50V 27P	1	
C125-36		ECUM1E104ZFN	C.CAPACITOR CH 25V 0.1U	12	
CN250		VJP1879T	CONNECTOR (MALE)	1	
CN251,52		VJP1881T	CONNECTOR (MALE)	2	
CN253		VJP1876T	CONNECTOR (MALE)	1	
D1-D3		MA151WK	DIODE	3	
D4		MA151K	DIODE	1	
D101-07		MA3130-L	DIODE	7	
IC101		AN78N09	IC	1	
IC102		AN79N09	IC	1	
L1,L2		VLQEL05F101K	COIL 100UH	2	
P1		VJP1875T	CONNECTOR (MALE)	1	
P3		VJP1875T	CONNECTOR (MALE)	1	
Q1-Q7		2SA1226	TRANSISTOR	7	
Q101		2SB709	TRANSISTOR CHIP	1	(Q,R)
Q102,03		2SD601	TRANSISTOR CHIP	2	(Q,R)
Q104		2SB709	TRANSISTOR CHIP	1	(Q,R)
Q105,06		2SD601	TRANSISTOR CHIP	2	(Q,R)
Q107		2SB709	TRANSISTOR CHIP	1	(Q,R)
Q108,09		2SD601	TRANSISTOR CHIP	2	(Q,R)
Q110		2SB709	TRANSISTOR CHIP	1	(Q,R)
Q111,12		2SD601	TRANSISTOR CHIP	2	(Q,R)
Q113		2SB709	TRANSISTOR CHIP	1	(Q,R)
Q114,15		2SD601	TRANSISTOR CHIP	2	(Q,R)
Q116		2SB709	TRANSISTOR CHIP	1	(Q,R)
Q117,18		2SD601	TRANSISTOR CHIP	2	(Q,R)
Q119		2SB709	TRANSISTOR CHIP	1	(Q,R)
Q120,21		2SD601	TRANSISTOR CHIP	2	(Q,R)
			RESISTORS		
R1,R2		VRE0034E151	M.RESISTOR CH 1/10W 150	2	
R3		ERJ6GEYJ101	M.RESISTOR CH 1/10W 100	1	
R4,R5		ERJ6GEYJ152	M.RESISTOR CH 1/10W 1.5K	2	
R6		ERJ6GEYJ330	M.RESISTOR CH 1/10W 33	1	
R7		ERJ6GEYJ104	M.RESISTOR CH 1/10W 100K	1	
R8,R9		VRE0034E151	M.RESISTOR CH 1/10W 150	2	
R10		ERJ6GEYJ101	M.RESISTOR CH 1/10W 100	1	
R11,12		ERJ6GEYJ152	M.RESISTOR CH 1/10W 1.5K	2	
R13		ERJ6GEYJ330	M.RESISTOR CH 1/10W 33	1	
R14		ERJ6GEYJ104	M.RESISTOR CH 1/10W 100K	1	
R15,16		VRE0034E151	M.RESISTOR CH 1/10W 150	2	
R17		ERJ6GEYJ101	M.RESISTOR CH 1/10W 100	1	
R18		ERJ6GEYJ122	M.RESISTOR CH 1/10W 1.2K	1	
R19		ERJ6GEYJ330	M.RESISTOR CH 1/10W 33	1	
R20,21		VRE0034E151	M.RESISTOR CH 1/10W 150	2	
R22		ERJ6GEYJ101	M.RESISTOR CH 1/10W 100	1	
R23		ERJ6GEYJ122	M.RESISTOR CH 1/10W 1.2K	1	
R24		ERJ6GEYJ330	M.RESISTOR CH 1/10W 33	1	

Ref.No.		Part No.	Part Name & Description	Pcs	Remarks
R25,26		VRE0034E151	M.RESISTOR CH 1/10W 150	2	
R27		ERJ6GEYJ101	M.RESISTOR CH 1/10W 100	1	
R28,29		ERJ6GEYJ152	M.RESISTOR CH 1/10W 1.5K	2	
R30		ERJ6GEYJ330	M.RESISTOR CH 1/10W 33	1	
R31		ERJ6GEYJ101	M.RESISTOR CH 1/10W 100	1	
R32,33		ERJ6GEYJ152	M.RESISTOR CH 1/10W 1.5K	2	
R34		ERJ6GEYJ330	M.RESISTOR CH 1/10W 33	1	
R35		ERJ6GEYJ101	M.RESISTOR CH 1/10W 100	1	
R36,37		ERJ6GEYJ152	M.RESISTOR CH 1/10W 1.5K	2	
R38		ERJ6GEYJ330	M.RESISTOR CH 1/10W 33	1	
R39		VRE0034E151	M.RESISTOR CH 1/10W 150	1	
R40		VRE0034E64X	M.RESISTOR CH 1/10W 45.3	1	
R41		VRE0034E151	M.RESISTOR CH 1/10W 150	1	
R42		VRE0034E64X	M.RESISTOR CH 1/10W 45.3	1	
R43,44		VRE0034E03A	M.RESISTOR CH 1/10W 105	2	
R101,02		ERJ6GEYJ222	M.RESISTOR CH 1/10W 2.2K	2	
R103		ERJ6GEYJ470	M.RESISTOR CH 1/10W 47	1	
R104		ERJ6GEYJ222	M.RESISTOR CH 1/10W 2.2K	1	
R105,06		ERJ6GEYJ151	M.RESISTOR CH 1/10W 150	2	
R107		VRE0034E750	M.RESISTOR CH 1/10W 75	1	
R108,09		ERJ6GEYJ332	M.RESISTOR CH 1/10W 3.3K	2	
R110		VRE0034E750	M.RESISTOR CH 1/10W 75	1	
R111,12		ERJ6GEYJ222	M.RESISTOR CH 1/10W 2.2K	2	
R113		ERJ6GEYJ470	M.RESISTOR CH 1/10W 47	1	
R114		ERJ6GEYJ222	M.RESISTOR CH 1/10W 2.2K	1	
R115,16		ERJ6GEYJ151	M.RESISTOR CH 1/10W 150	2	
R117		VRE0034E750	M.RESISTOR CH 1/10W 75	1	
R118		ERJ6GEYJ332	M.RESISTOR CH 1/10W 3.3K	1	
R119,20		ERJ6GEYJ222	M.RESISTOR CH 1/10W 2.2K	2	
R121		ERJ6GEYJ470	M.RESISTOR CH 1/10W 47	1	
R122		ERJ6GEYJ222	M.RESISTOR CH 1/10W 2.2K	1	
R123,24		ERJ6GEYJ151	M.RESISTOR CH 1/10W 150	2	
R125		VRE0034E750	M.RESISTOR CH 1/10W 75	1	
R126		ERJ6GEYJ332	M.RESISTOR CH 1/10W 3.3K	1	
R127-29		ERJ6GEYJ222	M.RESISTOR CH 1/10W 2.2K	3	
R130,31		ERJ6GEYJ221	M.RESISTOR CH 1/10W 220	2	
R132		VRE0034E750	M.RESISTOR CH 1/10W 75	1	
R133-35		ERJ6GEYJ222	M.RESISTOR CH 1/10W 2.2K	3	
R136		ERJ6GEYJ470	M.RESISTOR CH 1/10W 47	1	
R137		ERJ6GEYJ222	M.RESISTOR CH 1/10W 2.2K	1	
R138,39		ERJ6GEYJ221	M.RESISTOR CH 1/10W 220	2	
R140		VRE0034E750	M.RESISTOR CH 1/10W 75	1	
R141-43		ERJ6GEYJ222	M.RESISTOR CH 1/10W 2.2K	3	
R144		ERJ6GEYJ470	M.RESISTOR CH 1/10W 47	1	
R145		ERJ6GEYJ222	M.RESISTOR CH 1/10W 2.2K	1	
R146,47		ERJ6GEYJ221	M.RESISTOR CH 1/10W 220	2	
R148		VRE0034E750	M.RESISTOR CH 1/10W 75	1	
R149-51		ERJ6GEYJ222	M.RESISTOR CH 1/10W 2.2K	3	
R152		ERJ6GEYJ470	M.RESISTOR CH 1/10W 47	1	
R153		ERJ6GEYJ222	M.RESISTOR CH 1/10W 2.2K	1	
R154,55		ERJ6GEYJ221	M.RESISTOR CH 1/10W 220	2	
R156		VRE0034E750	M.RESISTOR CH 1/10W 75	1	
R157		ERJ6GEYJ222	M.RESISTOR CH 1/10W 2.2K	1	
R158		ERJ6GEYJ470	M.RESISTOR CH 1/10W 47	1	
SW1,W2		VSS0307	SWITCH	2	
SW3,W4		VSS0207	SWITCH	2	
			MISCELLANEOUS		
		VJR0036	PIN	1	
	■	VEP83097B	P.C.BOARD W/COMPONENT		FOR AU-63-P,E,B
			VIDEO IN/OUT		AU-62-P,E,B

Refer to the P.C.BOARDS LIST, page 6-1-1, before using this page.

Ref.No.		Part No.	Part Name & Description	Pcs	Remarks
			CAPACITORS		
C1		ECUM1H103KBN	C.CAPACITOR CH 50V 0.01U	1	
C2		ECEA1CKG470	E.CAPACITOR 16V 47U	1	
C3		ECUM1H103KBN	C.CAPACITOR CH 50V 0.01U	1	
C4		ECEA1CKG470	E.CAPACITOR 16V 47U	1	
C101		ECEA1CKG470	E.CAPACITOR 16V 47U	1	
C102		ECUM1H103KBN	C.CAPACITOR CH 50V 0.01U	1	
C103		ECEA1CU101	E.CAPACITOR 16V 100U	1	
C104		ECUM1H103KBN	C.CAPACITOR CH 50V 0.01U	1	
C105		ECUM1H101JCN	C.CAPACITOR CH 50V 100P	1	
C106,07		ECUM1H270JCN	C.CAPACITOR CH 50V 27P	2	
C108		ECUM1H101JCN	C.CAPACITOR CH 50V 100P	1	
C109		ECUM1H270JCN	C.CAPACITOR CH 50V 27P	1	
C110		ECUM1H101JCN	C.CAPACITOR CH 50V 100P	1	
C111		ECUM1H270JCN	C.CAPACITOR CH 50V 27P	1	
C112		ECUM1H103KBN	C.CAPACITOR CH 50V 0.01U	1	
C113		ECUM1H101JCN	C.CAPACITOR CH 50V 100P	1	
C114		ECUM1H270JCN	C.CAPACITOR CH 50V 27P	1	
C115		ECEA1CKG470	E.CAPACITOR 16V 47U	1	
C116		ECUM1H103KBN	C.CAPACITOR CH 50V 0.01U	1	
C117		ECEA1CU101	E.CAPACITOR 16V 100U	1	
C118		ECUM1H103KBN	C.CAPACITOR CH 50V 0.01U	1	
C119		ECUM1H101JCN	C.CAPACITOR CH 50V 100P	1	
C120		ECUM1H270JCN	C.CAPACITOR CH 50V 27P	1	
C121		ECUM1H101JCN	C.CAPACITOR CH 50V 100P	1	
C122		ECUM1H270JCN	C.CAPACITOR CH 50V 27P	1	
C123		ECUM1H101JCN	C.CAPACITOR CH 50V 100P	1	
C124		ECUM1H270JCN	C.CAPACITOR CH 50V 27P	1	
C125-36		ECUM1E104ZFN	C.CAPACITOR CH 25V 0.1U	12	
CN250		VJP1879T	CONNECTOR (MALE)	1	
CN251,52		VJP1881T	CONNECTOR (MALE)	2	
CN253		VJP1876T	CONNECTOR (MALE)	1	
D1		MA151WK	DIODE	1	
D101-07		MA3130-L	DIODE	7	
IC101		AN78N09	IC	1	
IC102		AN79N09	IC	1	
L1,L2		VLQEL05F101K	COIL 100UH	2	
P3		VJP1875T	CONNECTOR (MALE)	1	
Q2		2SA1226	TRANSISTOR	1	
Q101		2SB709	TRANSISTOR CHIP	1	(Q,R)
Q102,03		2SD601	TRANSISTOR CHIP	2	(Q,R)
Q104		2SB709	TRANSISTOR CHIP	1	(Q,R)
Q105,06		2SD601	TRANSISTOR CHIP	2	(Q,R)
Q107		2SB709	TRANSISTOR CHIP	1	(Q,R)
Q108,09		2SD601	TRANSISTOR CHIP	2	(Q,R)
Q110		2SB709	TRANSISTOR CHIP	1	(Q,R)
Q111,12		2SD601	TRANSISTOR CHIP	2	(Q,R)
Q113		2SB709	TRANSISTOR CHIP	1	(Q,R)
Q114,15		2SD601	TRANSISTOR CHIP	2	(Q,R)
Q116		2SB709	TRANSISTOR CHIP	1	(Q,R)
Q117,18		2SD601	TRANSISTOR CHIP	2	(Q,R)
Q119		2SB709	TRANSISTOR CHIP	1	(Q,R)
Q120,21		2SD601	TRANSISTOR CHIP	2	(Q,R)

Ref.No.		Part No.	Part Name & Description	Pcs	Remarks
			RESISTORS		
R8,R9		VRE0034E151	M.RESISTOR CH 1/10W 150	2	
R10		ERJ6GEYJ101	M.RESISTOR CH 1/10W 100	1	
R11,12		ERJ6GEYJ152	M.RESISTOR CH 1/10W 1.5K	2	
R13		ERJ6GEYJ330	M.RESISTOR CH1/10W 33	1	
R14		ERJ6GEYJ104	M.RESISTOR CH 1/10W 100K	1	
R101,02		ERJ6GEYJ222	M.RESISTOR CH 1/10W 2.2K	2	
R103		ERJ6GEYJ470	M.RESISTOR CH 1/10W 47	1	
R104		ERJ6GEYJ222	M.RESISTOR CH 1/10W 2.2K	1	
R105,06		ERJ6GEYJ151	M.RESISTOR CH 1/10W 150	2	
R107		VRE0034E750	M.RESISTOR CH 1/10W 75	1	
R108,09		ERJ6GEYJ332	M.RESISTOR CH 1/10W 3.3K	2	
R110		VRE0034E750	M.RESISTOR CH 1/10W 75	1	
R111,12		ERJ6GEYJ222	M.RESISTOR CH 1/10W 2.2K	2	
R113		ERJ6GEYJ470	M.RESISTOR CH 1/10W 47	1	
R114		ERJ6GEYJ222	M.RESISTOR CH 1/10W 2.2K	1	
R115,16		ERJ6GEYJ151	M.RESISTOR CH 1/10W 150	2	
R117		VRE0034E750	M.RESISTOR CH 1/10W 75	1	
R118		ERJ6GEYJ332	M.RESISTOR CH 1/10W 3.3K	1	
R119,20		ERJ6GEYJ222	M.RESISTOR CH 1/10W 2.2K	2	
R121		ERJ6GEYJ470	M.RESISTOR CH 1/10W 47	1	
R122		ERJ6GEYJ222	M.RESISTOR CH 1/10W 2.2K	1	
R123,24		ERJ6GEYJ151	M.RESISTOR CH 1/10W 150	2	
R125		VRE0034E750	M.RESISTOR CH 1/10W 75	1	
R126		ERJ6GEYJ332	M.RESISTOR CH 1/10W 3.3K	1	
R127-29		ERJ6GEYJ222	M.RESISTOR CH 1/10W 2.2K	3	
R130,31		ERJ6GEYJ221	M.RESISTOR CH 1/10W 220	2	
R132		VRE0034E750	M.RESISTOR CH 1/10W 75	1	
R133-35		ERJ6GEYJ222	M.RESISTOR CH 1/10W 2.2K	3	
R136		ERJ6GEYJ470	M.RESISTOR CH 1/10W 47	1	
R137		ERJ6GEYJ222	M.RESISTOR CH 1/10W 2.2K	1	
R138,39		ERJ6GEYJ221	M.RESISTOR CH 1/10W 220	2	
R140		VRE0034E750	M.RESISTOR CH 1/10W 75	1	
R141-43		ERJ6GEYJ222	M.RESISTOR CH 1/10W 2.2K	3	
R144		ERJ6GEYJ470	M.RESISTOR CH 1/10W 47	1	
R145		ERJ6GEYJ222	M.RESISTOR CH 1/10W 2.2K	1	
R146,47		ERJ6GEYJ221	M.RESISTOR CH 1/10W 220	2	
R148		VRE0034E750	M.RESISTOR CH 1/10W 75	1	
R149-51		ERJ6GEYJ222	M.RESISTOR CH 1/10W 2.2K	3	
R152		ERJ6GEYJ470	M.RESISTOR CH 1/10W 47	1	
R153		ERJ6GEYJ222	M.RESISTOR CH 1/10W 2.2K	1	
R154,55		ERJ6GEYJ221	M.RESISTOR CH 1/10W 220	2	
R156		VRE0034E750	M.RESISTOR CH 1/10W 75	1	
R157		ERJ6GEYJ222	M.RESISTOR CH 1/10W 2.2K	1	
R158		ERJ6GEYJ470	M.RESISTOR CH 1/10W 47	1	
SW2		VSS0307	SWITCH	1	
			MISCELLANEOUS		
		VJR0036	RUG PIN	1	
	■	VEP83097C	P.C.BOARD W/COMPONENT		FOR AU-65-E,B
			VIDEO IN/OUT		
			CAPACITORS		
C1		ECUM1H103KBN	C.CAPACITOR CH 50V 0.01U	1	
C2		ECEA1CKG470	E.CAPACITOR 16V 47U	1	
C3		ECUM1H103KBN	C.CAPACITOR CH 50V 0.01U	1	
C4		ECEA1CKG470	E.CAPACITOR 16V 47U	1	

Refer to the P.C.BOARDS LIST, page 6-1-1, before using this page.

Ref.No.		Part No.	Part Name & Description	Pcs	Remarks
C5-C8		ECUM1H103KBN	C.CAPACITOR CH 50V 0.01U	4	
C10		ECQM1H104JF	P.CAPACITOR 50V 0.1U	1	
C101		ECEA1CKG470	E.CAPACITOR 16V 47U	1	
C102		ECUM1H103KBN	C.CAPACITOR CH 50V 0.01U	1	
C103		ECEA1CU101	E.CAPACITOR 16V 100U	1	
C104		ECUM1H103KBN	C.CAPACITOR CH 50V 0.01U	1	
C105		ECUM1H101JCN	C.CAPACITOR CH 50V 100P	1	
C106,07		ECUM1H270JCN	C.CAPACITOR CH 50V 27P	2	
C108		ECUM1H101JCN	C.CAPACITOR CH 50V 100P	1	
C109		ECUM1H270JCN	C.CAPACITOR CH 50V 27P	1	
C110		ECUM1H101JCN	C.CAPACITOR CH 50V 100P	1	
C111		ECUM1H270JCN	C.CAPACITOR CH 50V 27P	1	
C112		ECUM1H103KBN	C.CAPACITOR CH 50V 0.01U	1	
C113		ECUM1H101JCN	C.CAPACITOR CH 50V 100P	1	
C114		ECUM1H270JCN	C.CAPACITOR CH 50V 27P	1	
C115		ECEA1CKG470	E.CAPACITOR 16V 47U	1	
C116		ECUM1H103KBN	C.CAPACITOR CH 50V 0.01U	1	
C117		ECEA1CU101	E.CAPACITOR 16V 100U	1	
C118		ECUM1H103KBN	C.CAPACITOR CH 50V 0.01U	1	
C119		ECUM1H101JCN	C.CAPACITOR CH 50V 100P	1	
C120		ECUM1H270JCN	C.CAPACITOR CH 50V 27P	1	
C121		ECUM1H101JCN	C.CAPACITOR CH 50V 100P	1	
C122		ECUM1H270JCN	C.CAPACITOR CH 50V 27P	1	
C123		ECUM1H101JCN	C.CAPACITOR CH 50V 100P	1	
C124		ECUM1H270JCN	C.CAPACITOR CH 50V 27P	1	
C125-36		ECUM1E104ZFN	C.CAPACITOR CH 25V 0.1U	12	
CN250		VJP1879T	CONNECTOR(MALE)	1	
CN251,52		VJP1881T	CONNECTOR(MALE)	2	
CN253		VJP1876T	CONNECTOR(MALE)	1	
D1-D3		MA151WK	DIODE	3	
D4		MA151K	DIODE	1	
D101-07		MA3130-L	DIODE	7	
IC101		AN78N09	IC	1	
IC102		AN79N09	IC	1	
L1,L2		VLQEL05F101K	COIL 100UH	2	
P1		VJP1875T	CONNECTOR(MALE)	1	
P3		VJP1875T	CONNECTOR(MALE)	1	
Q1-Q7		2SA1226	TRANSISTOR	7	
Q101		2SB709	TRANSISTOR CHIP	1	(Q,R)
Q102,03		2SD601	TRANSISTOR CHIP	2	(Q,R)
Q104		2SB709	TRANSISTOR CHIP	1	(Q,R)
Q105,06		2SD601	TRANSISTOR CHIP	2	(Q,R)
Q107		2SB709	TRANSISTOR CHIP	1	(Q,R)
Q108,09		2SD601	TRANSISTOR CHIP	2	(Q,R)
Q110		2SB709	TRANSISTOR CHIP	1	(Q,R)
Q111,12		2SD601	TRANSISTOR CHIP	2	(Q,R)
Q113		2SB709	TRANSISTOR CHIP	1	(Q,R)
Q114,15		2SD601	TRANSISTOR CHIP	2	(Q,R)
Q116		2SB709	TRANSISTOR CHIP	1	(Q,R)
Q117,18		2SD601	TRANSISTOR CHIP	2	(Q,R)
Q119		2SB709	TRANSISTOR CHIP	1	(Q,R)
Q120,21		2SD601	TRANSISTOR CHIP	2	(Q,R)
			RESISTORS		
R1,R2		VRE0034E151	M.RESISTOR CH 1/10W 150	2	

Ref.No.		Part No.	Part Name & Description	Pcs	Remarks
R3		ERJ6GEYJ101	M.RESISTOR CH 1/10W 100	1	
R4,R5		ERJ6GEYJ152	M.RESISTOR CH 1/10W 1.5K	2	
R6		ERJ6GEYJ330	M.RESISTOR CH 1/10W 33	1	
R7		ERJ6GEYJ104	M.RESISTOR CH 1/10W 100K	1	
R8,R9		VRE0034E151	M.RESISTOR CH 1/10W 150	2	
R10		ERJ6GEYJ101	M.RESISTOR CH 1/10W 100	1	
R11,12		ERJ6GEYJ152	M.RESISTOR CH 1/10W 1.5K	2	
R13		ERJ6GEYJ330	M.RESISTOR CH 1/10W 33	1	
R14		ERJ6GEYJ104	M.RESISTOR CH 1/10W 100K	1	
R15,16		VRE0034E151	M.RESISTOR CH 1/10W 150	2	
R17		ERJ6GEYJ101	M.RESISTOR CH 1/10W 100	1	
R18		ERJ6GEYJ122	M.RESISTOR CH 1/10W 1.2K	1	
R19		ERJ6GEYJ330	M.RESISTOR CH 1/10W 33	1	
R20,21		VRE0034E151	M.RESISTOR CH 1/10W 150	2	
R22		ERJ6GEYJ101	M.RESISTOR CH 1/10W 100	1	
R23		ERJ6GEYJ122	M.RESISTOR CH 1/10W 1.2K	1	
R24		ERJ6GEYJ330	M.RESISTOR CH 1/10W 33	1	
R25,26		VRE0034E151	M.RESISTOR CH 1/10W 150	2	
R27		ERJ6GEYJ101	M.RESISTOR CH 1/10W 100	1	
R28,29		ERJ6GEYJ152	M.RESISTOR CH 1/10W 1.5K	2	
R30		ERJ6GEYJ330	M.RESISTOR CH 1/10W 33	1	
R31		ERJ6GEYJ101	M.RESISTOR CH 1/10W 100	1	
R32,33		ERJ6GEYJ152	M.RESISTOR CH 1/10W 1.5K	2	
R34		ERJ6GEYJ330	M.RESISTOR CH 1/10W 33	1	
R35		ERJ6GEYJ101	M.RESISTOR CH 1/10W 100	1	
R36,37		ERJ6GEYJ152	M.RESISTOR CH 1/10W 1.5K	2	
R38		ERJ6GEYJ330	M.RESISTOR CH 1/10W 33	1	
R39		VRE0034E151	M.RESISTOR CH 1/10W 150	1	
R40		VRE0034E64X	M.RESISTOR CH 1/10W	1	
R41		VRE0034E151	M.RESISTOR CH 1/10W 150	1	
R42		VRE0034E64X	M.RESISTOR CH 1/10W	1	
R43,44		VRE0034E03A	M.RESISTOR CH 1/10W	2	
R101,02		ERJ6GEYJ222	M.RESISTOR CH 1/10W 2.2K	2	
R103		ERJ6GEYJ470	M.RESISTOR CH 1/10W 47	1	
R104		ERJ6GEYJ222	M.RESISTOR CH 1/10W 2.2K	1	
R105,06		ERJ6GEYJ151	M.RESISTOR CH 1/10W 150	2	
R107		VRE0034E750	M.RESISTOR CH 1/10W 75	1	
R108,09		ERJ6GEYJ332	M.RESISTOR CH 1/10W 3.3K	2	
R110		VRE0034E750	M.RESISTOR CH 1/10W 75	1	
R111,12		ERJ6GEYJ222	M.RESISTOR CH 1/10W 2.2K	2	
R113		ERJ6GEYJ470	M.RESISTOR CH 1/10W 47	1	
R114		ERJ6GEYJ222	M.RESISTOR CH 1/10W 2.2K	1	
R115,16		ERJ6GEYJ151	M.RESISTOR CH 1/10W 150	2	
R117		VRE0034E750	M.RESISTOR CH 1/10W 75	1	
R118		ERJ6GEYJ332	M.RESISTOR CH 1/10W 3.3K	1	
R119,20		ERJ6GEYJ222	M.RESISTOR CH 1/10W 2.2K	2	
R121		ERJ6GEYJ470	M.RESISTOR CH 1/10W 47	1	
R122		ERJ6GEYJ222	M.RESISTOR CH 1/10W 2.2K	1	
R123,24		ERJ6GEYJ151	M.RESISTOR CH 1/10W 150	2	
R125		VRE0034E750	M.RESISTOR CH 1/10W 75	1	
R126		ERJ6GEYJ332	M.RESISTOR CH 1/10W 3.3K	1	
R127-29		ERJ6GEYJ222	M.RESISTOR CH 1/10W 2.2K	3	
R130,31		ERJ6GEYJ221	M.RESISTOR CH 1/10W 220	2	
R132		VRE0034E750	M.RESISTOR CH 1/10W 75	1	
R133-35		ERJ6GEYJ222	M.RESISTOR CH 1/10W 2.2K	3	
R136		ERJ6GEYJ470	M.RESISTOR CH 1/10W 47	1	
R137		ERJ6GEYJ222	M.RESISTOR CH 1/10W 2.2K	1	
R138,39		ERJ6GEYJ221	M.RESISTOR CH 1/10W 220	2	
R140		VRE0034E750	M.RESISTOR CH 1/10W 75	1	
R141-43		ERJ6GEYJ222	M.RESISTOR CH 1/10W 2.2K	3	
R144		ERJ6GEYJ470	M.RESISTOR CH 1/10W 47	1	
R145		ERJ6GEYJ222	M.RESISTOR CH 1/10W 2.2K	1	
R146,47		ERJ6GEYJ221	M.RESISTOR CH 1/10W 220	2	
R148		VRE0034E750	M.RESISTOR CH 1/10W 75	1	
R149-51		ERJ6GEYJ222	M.RESISTOR CH 1/10W 2.2K	3	
R152		ERJ6GEYJ470	M.RESISTOR CH 1/10W 47	1	
R153		ERJ6GEYJ222	M.RESISTOR CH 1/10W 2.2K	1	
R154,55		ERJ6GEYJ221	M.RESISTOR CH 1/10W 220	2	
R156		VRE0034E750	M.RESISTOR CH 1/10W 75	1	
R157		ERJ6GEYJ222	M.RESISTOR CH 1/10W 2.2K	1	
R158		ERJ6GEYJ470	M.RESISTOR CH 1/10W 47	1	
SW1,W2		VSS0307	SWITCH	2	

Refer to the P.C.BOARDS LIST, page 6-1-1, before using this page.

Ref.No.		Part No.	Part Name & Description	Pcs	Remarks
			MISCELLANEOUS		
		VJR0036	RUG PIN	1	
	■	VEP80574A	P.C.BOARD W/COMPONENT		
			YC IN/OUT		
CN270		VJP1244T	CONNECTOR(MALE) 4P	1	
J201		VJS2579	CONNECTOR (FEMALE)	1	
	■	VEP80551A	P.C.BOARD W/COMPONENT		
			9P REMOTE		
CN280		VJP1235T	CONNECTOR(MALE) 8P	1	
9P.1		VJS2642A009	CONNECTOR (FEMALE)	1	

MECHANICAL REPLACEMENT PARTS LIST

CASING FRAME ASSEMBLY

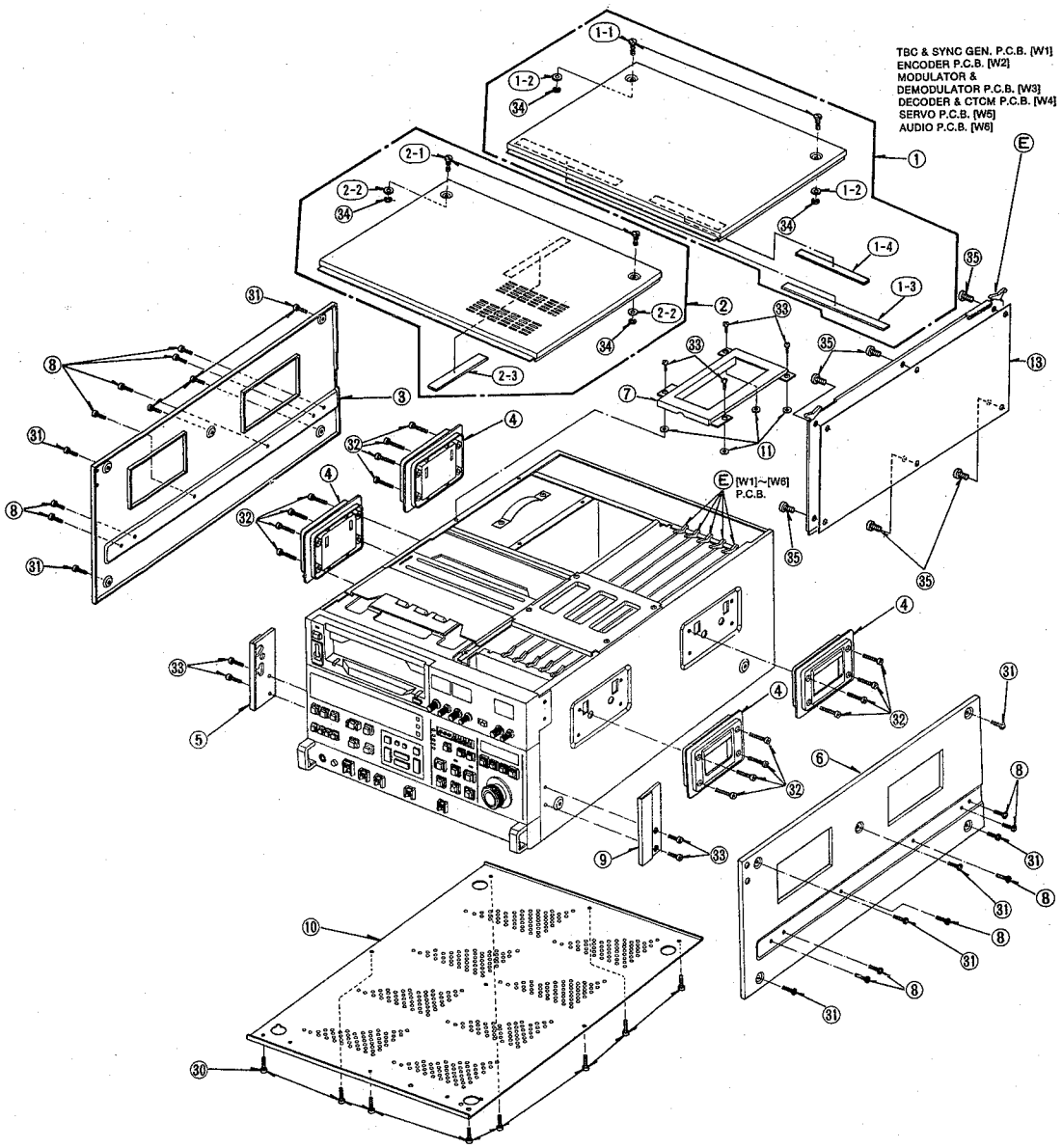

CASING FRAME ASSEMBLY

Ref.No.		Part No.	Part Name & Description	Pcs	Remarks
1		VYP2980	REAR TOP COVER UNIT	1	
1-1		VHD0274	TOP COVER SCREW	2	
1-2		VMX0835	TOP COVER SPACER (SCREW)	2	
1-3		VMX1835	REAR TOP COVER SPACER (A)	1	
1-4		VMT0119	P.C.B. PRESSURE RUBBER	1	
2		VYP2979	FRONT TOP COVER UNIT	1	
2-1		VHD0274	TOP COVER SCREW	2	
2-2		VMX0835	TOP COVER SPACER (SCREW)	2	
2-3		VMX1836	FRONT TOP COVER SPACER (B)	1	
3		VGM0610	LEFT SIDE COVER	1	
4		VYH0128	HANDLE	4	
5		VYK1492	LEFT SIDE PANEL PLATE UNIT	1	
6		VGM0609	RIGHT SIDE COVER	1	
7		VMP2597	POWER UNIT MOUNT ANGLE	1	
8		VHD0153	RAIL MOUNT SCREW	12	

Ref.No.		Part No.	Part Name & Description	Pcs	Remarks
9		VYK1491	RIGHT SIDE PANEL PLATE UNIT	1	
10		VGM0591	BOTTOM PLATE	1	
11		VMX1558	WASHER	4	
13		VXA3966	W P.C.B. SHIELD PLATE	6	5pcs:AU-63-P,AU-63-E, AU-62-P,AU-62-E
30		XSB3+6S	SCREW	8	
31		XSB4+8FCS	SCREW	10	
32		XSB4+16FCS	SCREW	16	
33		XTV3+6F	SCREW	8	
34		XUC3FP	E-RING	4	
35		XYNV3+K6FR	SCREW	6	

MECHANICAL CHASSIS ASSEMBLY (1)

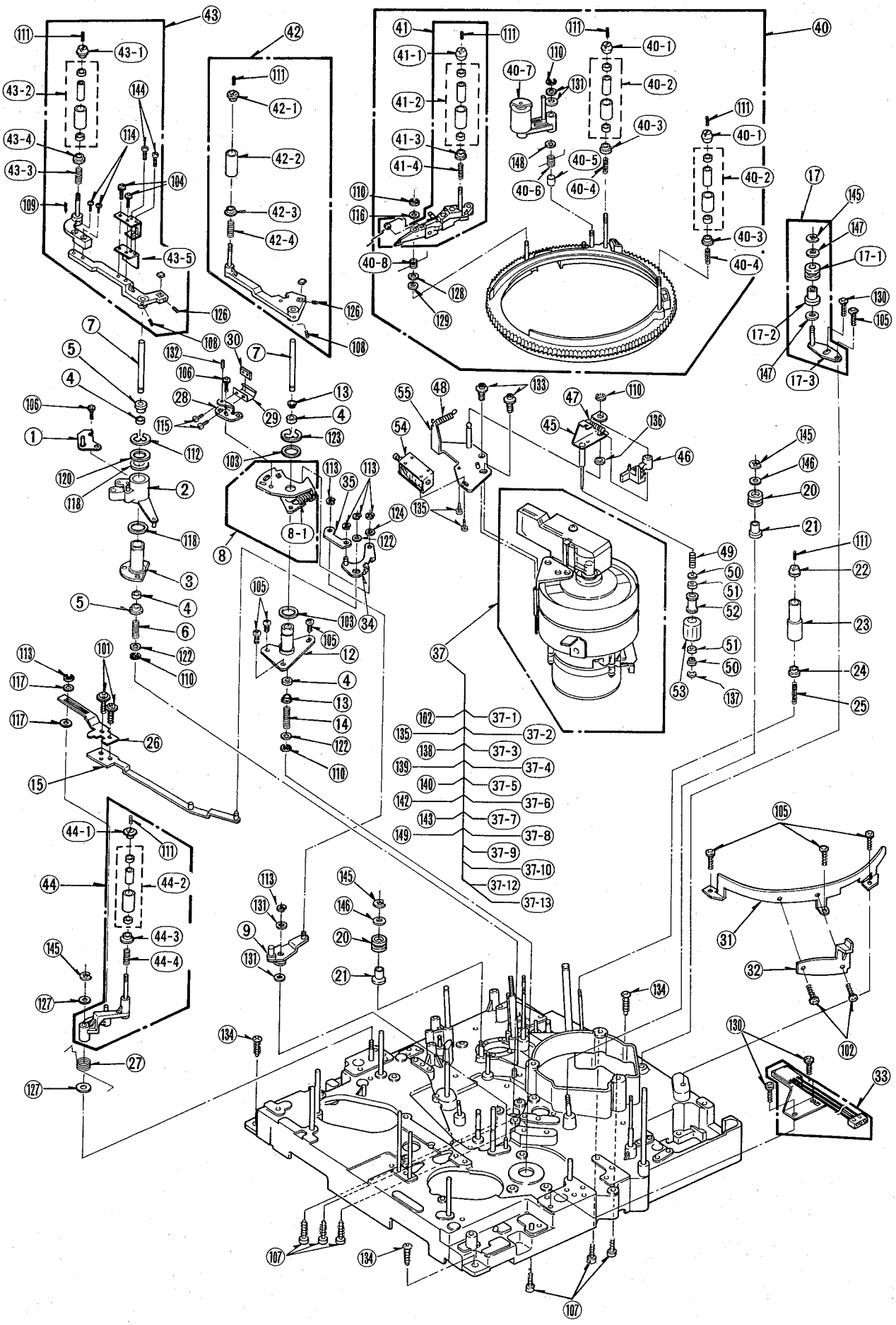

MECHANICAL CHASSIS ASSEMBLY (1)

Ref.No.		Part No.	Part Name & Description	Pcs	Remarks
1		VXA2302	STOPPER PIN BASE UNIT	1	
2		VXL1309	SUPPLY TA SUB-ARM (1) UNIT	1	
3		VDB0772	SUPPLY TENSION SUPORT	1	
			HOUSING		
4		VDB0779	BEARING	4	
5		VMX0794	BEARING RETAINER	2	
6		VMB1378	POST SPRING	1	
7		VMS3662	PANEL FIXTURE (LEFT)	2	
8		VXA4001	TAKE-UP DRAW OUT ARM UNIT	1	
8-1		VMB2131	TAKE-UP TENSION CHARGE	1	
			SPRING		
9		VXA3994	TAKE-UP DRAW-UP DRIVE	1	
			LEVER UNIT		
12		VXD0126	TAKE-UP TENSION HOUSING	1	
13		VMX0794	BEARING RETAINER	2	
14		VMB1377	POST SPRING	1	
15		VXA4003	P1 ARM DRIVE ROD II UNIT	1	
17		VXR0206	RING ROLLER UNIT	1	
17-1		VDP1360	RING ROLLER	1	
17-2		VDB1079	RING ROLLER BOSS	1	
17-3		VXA4252	RING ROLLER (1) UNIT	1	
20		VDP1360	RING ROLLER	2	
21		VDB1079	RING ROLLER BOSS	2	
22		VMS3712	UPPER FLANGE (P4)	1	
23		VXP0824	LIMITER ROLLER (B) UNIT	1	
24		VMS2806	POST BEARING RETAINER (A)	1	
			(P4)		
25		VMB1379	POST SPRING (P3)	1	
26		VMM0237	P1 ARM DRIVE ROD (I)	1	
27		VMB1362	P1 ARM DRAW-OUT SPRING	1	
28		VMA8178	TAKE-UP TENSION REGULATING	1	
			PLATE		
29		VMC0595	TAKE-UP TENSION LEAF SPRING	1	
30		VMA8181	FIXING PLATE	1	
31		VMA6652	TURN ROLLER LIFTER	1	
32		VML1780	STOPPER ARM	1	
33		VEK3785	TAKE-UP MAGNETIC SENSOR	1	
			UNIT		
34		VXA4002	STOPPER ARM UNIT	1	
35		VMM0236	DRAW-OUT ROD	1	
37		VEG0780	DRUM UNIT	1	AU-65-P
37		VEG0837	DRUM UNIT	1	AU-65-E
37		VEG0806	DRUM UNIT	1	AU-63-P
37		VEG0839	DRUM UNIT	1	AU-63-E
37		VEG0804	DRUM UNIT	1	AU-62-P
37		VEG0838	DRUM UNIT	1	AU-62-E
37-1		VEH0475	UPPER DRUM UNIT	1	AU-65-P,AU-62-P
37-1		VEH0482	UPPER DRUM UNIT	1	AU-63-P
37-1		VEH0494	UPPER DRUM UNIT	1	AU-65-E,AU-62-E
37-1		VEH0495	UPPER DRUM UNIT	1	AU-63-E
37-2		VMD1572	RT ARM BLOCK	1	
37-3		VEK2372	DEW SENSOR	1	
37-4		VSC1334	SHIELD PLATE	1	
37-5		VAG0273	TAPE GUIDE	1	
37-6		VSC2693	SHIELD BAND	1	
37-7		VXS0102	BRUSH UNIT	1	AU-63-P,AU-63-E
37-8		VXS0092	SLIP-RING UNIT	1	AU-63-P,AU-63-E
37-9		VEG0781	LOWER DRUM UNIT	1	AU-65-P,AU-65-E
37-9		VEG0812	LOWER DRUM UNIT	1	AU-63-P,AU-63-E
37-9		VEG0809	LOWER DRUM UNIT	1	AU-62-P,AU-62-E
37-10		VMD1612	BRUSH COVER	1	AU-63-P,AU-63-E
37-12		VMA8157	EARTH ANGLE	1	AU-65-P,AU-65-E,
					AU-62-P,AU-62-E
37-13		VXS0024	EARTH BRUSH	1	AU-65-P,AU-65-E,
					AU-62-P,AU-62-E
40		VXP1182	LOADING RING UNIT	1	
40-1		VMS3638	UPPER FLANGE	2	
40-2		VXP0821	POST ROLLER (B) UNIT	2	
40-3		VMS2803	LOWER FLANGE	2	
40-4		VMB1377	POST SPRING	2	
40-5		VMX1406	PINCH ARM SHAFT COLLAR	1	
40-6		VMB1373	PINCH ROLLER RETURN SPRING	1	
40-7		VXL1288	PINCH ROLLER ARM UNIT	1	
40-8		VMB1796	TR ARM RETURN SPRING A	1	
41		VXL1754	TURN ROLLER ARM UNIT	1	

Ref.No.		Part No.	Part Name & Description	Pcs	Remarks
41-1		VMS3638	UPPER FLANGE	1	
41-2		VXP0821	POST ROLLER (B) UNIT	1	
41-3		VMS2803	LOWER FLANGE	1	
41-4		VMB1376	POST SPRING	1	
42		VXL1319	TAKE-UP TENSION ARM UNIT	1	
42-1		VMS3639	UPPER FLANGE (P1)	1	
42-2		VXP0820	POST ROLLER (A) UNIT	1	
42-3		VMS2800	LOWER FLANGE (P3)	1	
42-4		VMB1378	POST SPRING	1	
42-5		VXL1991	TAKE-UP TENSION ARM UNIT	1	
43		VXL1320	SUPPLY TENSION ARM UNIT	1	
43-1		VMS4572	UPPER FLANGE (P2)	1	
43-2		VXP0820	POST ROLLER (A) UNIT	1	
43-3		VMB1378	POST SPRING	1	
43-4		VMS2801	LOWER FLANGE (P2)	1	
43-5		VMC0119	SUPPLY TENSION LEAF SPRING	1	
44		VXL1323	DRAW-OUT ARM UNIT	1	
44-1		VMS3639	UPPER FLANGE (P1)	1	
44-2		VXP0820	POST ROLLER (A) UNIT	1	
44-3		VMS2800	LOWER FLANGE (P3)	1	
44-4		VMB1378	POST SPRING	1	
45		VXL1994	CLEANER ARM (A) UNIT	1	
46		VML2393	CLEANER ARM (B)	1	
47		VMB2128	ROLLER PRESSURE SPRING	1	
48		VMB2129	ROLLER SPRING	1	
49		VMB1379	POST SPRING (P3)	1	
50		VMX1161	P4 BEARING PRESSURE	2	
51		VDB0778	BEARING	2	
52		VDP1321	CLEANEAR ROLLER	1	
53		VMT0321	CLEANER	1	
54		VSJ0096	CLEANER SOLENOID	1	
55		VXA4016	CLEANER BASE UNIT	1	
56		VXA4013	T-STOPPER PIN BASE UNIT	1	
101		XYN26+F5FZS	SCREW	2	
102		XYN26+C4	SCREW	3	
103		XWGV93D13G	WASHER	2	
104		XYNV26+K8	SCREW	2	
105		XTV3+6F	SCREW	7	
106		XYNV26+K5	SCREW	2	
107		XYNV3+K10S	SCREW	6	
108		XXE26W3FP	HEX HEAD SCREW	2	
109		XXE26A4FP	HEX HEAD SCREW	1	
110		XUC25FP	E RING	4	
111		XXE2C25FP	HEX HEAD SCREW	8	
112		XUC8FP	E RING	1	
113		XUC2FP	E RING	6	
114		XSN2+6	SCREW	2	
115		XYN2+C4	SCREW	2	
116		XWGV3Y6G	WASHER	1	
117		XWGV25D5G	WASHER	2	
118		XWGV10D15G	WASHER	2	
120		XWGV10Y15G	WASHER	1	
122		XWG3	WASHER	3	
123		XUC7FP	E RING	1	
124		XWGV3Y6G	WASHER	1	
126		XXE2D3FP	HEX HEAD SCREW	2	
127		XWGV4D9G	WASHER	1	
128		XWGV3D8G	WASHER	1	
129		XWGV3Y8G	WASHER	1	
130		XTV3+6FFZ	SCREW	3	
131		XWGV3D6G	WASHER	4	
132		XXE2C8FP	HEX HEAD SCREW	1	
133		XYN3+F6FZS	SCREW	2	
134		XYN4+C10S	SCREW	3	
135		XYN2+C3	SCREW	3	
136		XWGV3D6G	WASHER	1	
137		XUC15FP	E-RING	1	
138		XYN3+C6	SCREW	4	
139		XYN3+A10BW	SCREW	2	
140		XYN2+C3	SCREW	1	
142		XYN3+A4	SCREW	1	AU-65-P,AU-65-E,
					AU-62-P,AU-62-E

To be continued on the next page.

Ref.No.		Part No.	Part Name & Description	Pcs	Remarks
143		XYN26+C6	SCREW	3	
144		XSN2+4	SCREW	2	
145		XUC3FP	E-RING	4	
146		XWGV4D7G	WASHER	2	
147		XWGV4F7G	WASHER	2	
148		XWGV3Z6G	WASHER	1	
149		XYNV0015	SCREW	1	AU-63-P,AU-63-E

MECHANICAL CHASSIS ASSEMBLY (2)

Ref.No.		Part No.	Part Name & Description	Pcs	Remarks
1		VES0565	DETECTION BIT (L) UNIT	1	
1-1		EVQWUS002	CASSETTE ID MODE SWITCH	1	
1-2		VXA4000	DETECTION BIT (L) (1) UNIT	1	
2		VMD1147	CASSETTE GUIDE S	1	
3		VMB1832	CASSETTE GUIDE S SPRING	1	
4		VHN0046	TIMER ROLLER NUT	1	
5		VDB0778	BEARING	2	
6		VMX0801	TIMER ROLLER INNER COLLAR	1	
7		VXP1183	TIMER ROLLER UNIT	1	
8		VMS2806	POST BEARING RETAINER (A)	1	
			(P4)		
9		VMB1379	POST SPRING (P3)	1	
10		VMB1801	P10 RETURN SPRING	1	
11		VXA2525	TILT ADJUST BASE UNIT	1	
12		VXL1786	SUB-LOADING ARM UNIT	1	
12-1		VXR0131	IP BASE UNIT	1	
12-2		VMB1376	POST SPRING	1	
12-3		VMS2870	BEARING RETAINER	1	
12-4		VXP0822	POST BEARING (C) UNIT	1	
12-5		VMS3638	UPPER FLANGE	1	
12-6		VMB1368	TILT RETURN SPRING	1	
12-7		VMB1375	IP ARM RETURN SPRING	1	
13		VXL2066	ROLLER ARM (C) UNIT	1	
14		VXA3990	SUB-LOADING COVER ASSEMBLY	1	
14-1		VXA3996	SUB-LOADING COVER (1) UNIT	1	
14-2		VXL1294	UPRIGHT LEVER UNIT	1	
14-3		VML1694	UPRIGHT DRIVE LEVER	1	
14-4		VMB1762	UPRIGHT LEVER RETURN SPRING	1	
15		VXA3989	TR SENSOR ANGLE UNIT	1	
15-1		VMA8171	TR SENSOR ANGLE (I)	1	
15-2		VMA8172	TR SENSOR ANGLE (II)	1	
16		VDG0667	RING JUNCTION GEAR (I)	1	
17		VDG0668	RING JUNCTION GEAR (II)	1	
18		VDG0669	GEAR WITH CAM	1	
19		VXA4011	PINCH ROLLER GUIDE UNIT	1	
20		VXA3997	CASSETTE REEL BASE S (I)	1	
			UNIT		
21		VEM0264	MOTOR UNIT	1	
22		VDG0666	CAM WORM WHEEL	1	
23		VMA8170	POSITIONING PLATE	1	
24		VDB0833	WORM BEARING	2	
25		VXP1019	CASSETTE S WORM SHAFT UNIT	1	
26		VSH0026	LEAF SWITCH	2	
27		VMX0400	LEAF SWITCH SPACER	1	
28		VMB2132	BALANCING SPRING 1	1	
29		VXA3999	CASSETTE S REEL STAND BASE	1	
			(1) UNIT		
30		VDG0670	CASSETTE S REEL	1	
			INTERMEDIATE GEAR		
31		VMX0653	CUT WASHER	1	
32		VMB2140	INTERMEDIATE GEAR SPRING	1	
33		VMB2141	CASSETTE S REEL STAND	1	
			SPRING		
34		VDB0429	BEARING	1	
35		VMA8177	LAMP MOUNT BASE	1	
36		VEK3493	LAMP MOUNT (1) UNIT	1	
38		VMB2135	SUPPLY DRIVE ARM RETURN	1	
			SPRING		
39		VML2387	SUPPLY TENSION DRIVE ARM	1	

Ref.No.		Part No.	Part Name & Description	Pcs	Remarks
100		XNG3CS	NUT	1	
101		XSN2+3	SCREW	1	
102		XSS26+5	SCREW	1	
103		XTV26+4F	SCREW	5	
104		XTV26+8F	SCREW	1	
106		XTV3+6F	SCREW	11	
107		XTV3+8F	SCREW	5	
108		XQN16+A3	SCREW	1	
109		XYN2+C4	SCREW	2	
110		XYN2+C5	SCREW	1	
111		XYN2+C8	SCREW	1	
112		XYN26+F5FZ	SCREW	1	
113		XYN26+F6FZ	SCREW	2	
114		XXE3A6FPS	HEX HEAD SCREW	1	
115		XXE3C6FP	HEX HEAD SCREW	1	
116		XUC25FP	E-RING	6	
117		XUC2FP	E-RING	1	
118		XUC3FP	E-RING	3	
119		XVE3B6FPS	HEX HEAD SCREW	2	
120		XWA3B	WASHER	2	
121		XWE3	WASHER	2	
122		XWGV3D6G	WASHER	5	
123		XWGV3F6G	WASHER	2	
124		XWGV3Y6G	WASHER	4	
125		XWGV4D7G	WASHER	2	
126		XWGV4F7G	WASHER	1	
127		XWGV4Y7G	WASHER	2	
128		XWGV4Y9G	WASHER	1	
129		XXE2C25FP	HEX HEAD SCREW	2	

MECHANICAL CHASSIS ASSEMBLY (2)

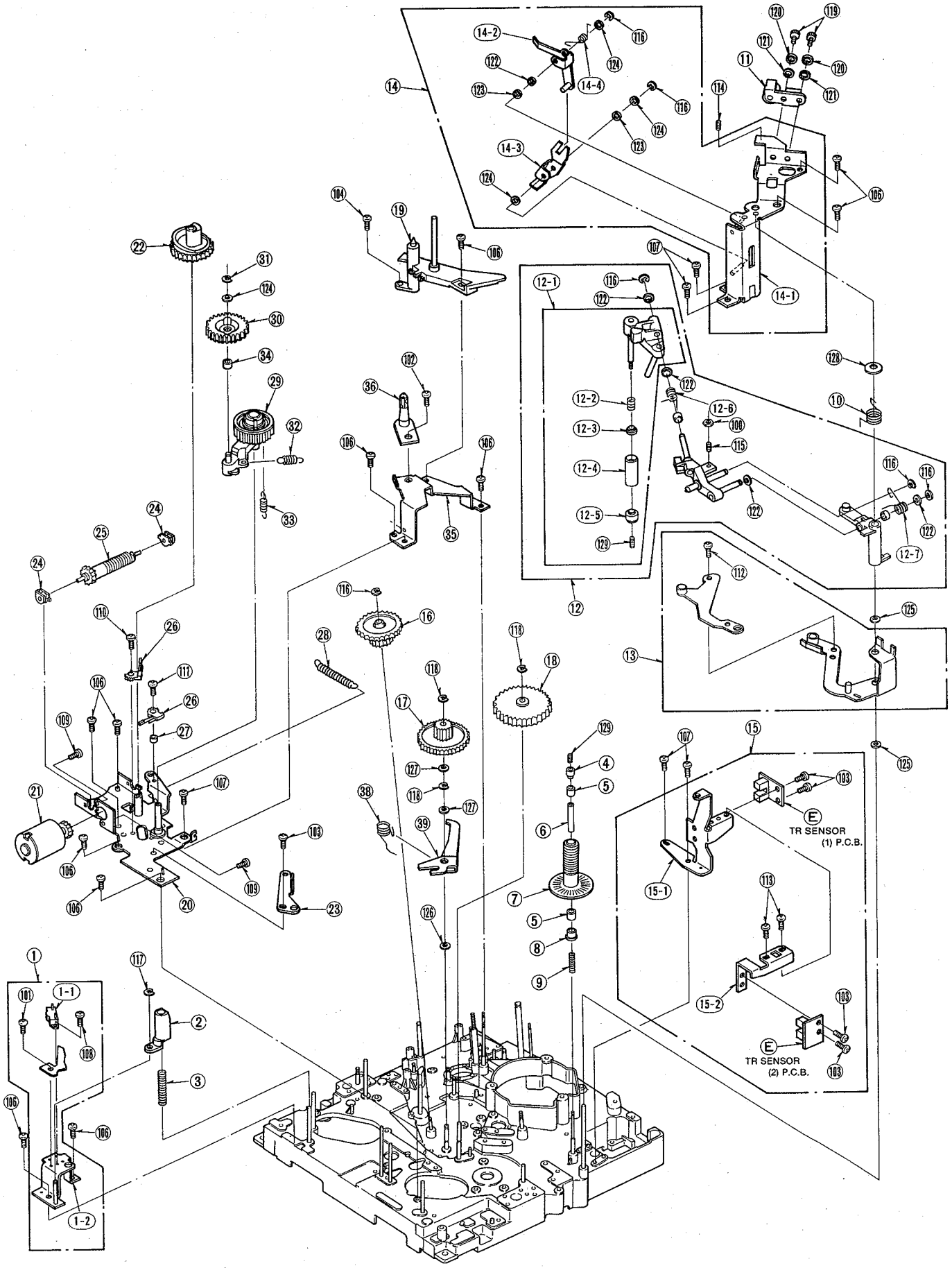

MECHANICAL CHASSIS ASSEMBLY (3)

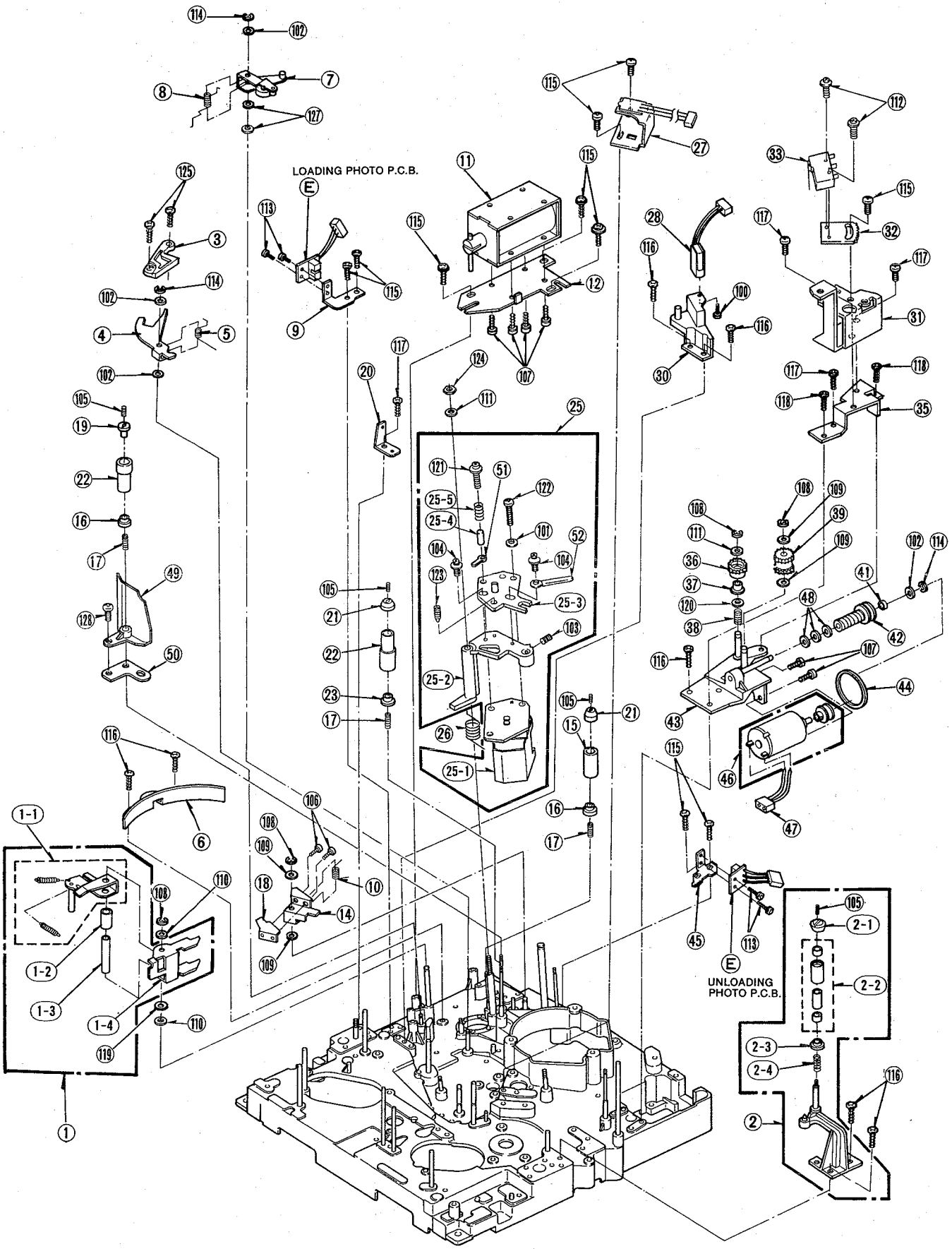

MECHANICAL CHASSIS ASSEMBLY (3)

Ref.No.		Part No.	Part Name & Description	Pcs	Remarks
1		VXL1679	PINCH PRESSURE LEVER UNIT	1	
1-1		VXL1680	PINCH DRIVE ARM UNIT	1	
1-2		VMX0800	PINCH COLLAR (3)	1	
1-3		VMX0799	PINCH COLLAR (2)	1	
1-4		VML1675	PINCH PRESSURE LEVER	1	
2		VXA3226	CASSETTE POSITIONING BASE	1	
			UNIT		
2-1		VMS3638	UPPER FLANGE	1	
2-2		VXP0821	POST ROLLER (B) UNIT	1	
2-3		VMS2803	LOWER FLANGE	1	
2-4		VMB1376	POST SPRING	1	
3		VMA7289	STOPPER RETAINER	1	
4		VML1702	TR STOPPER LEVER	1	
5		VMB1372	STOPPER LEVER RETURN SPRING	1	
6		VMD1412	TURN ROLLER GUIDE A	1	
7		VXL1995	DRIVE ARM UNIT	1	
8		VMB2134	DRIVE ARM RETURN SPRING	1	
9		VMA6624	LOADING PHOTO PLATE	1	
10		VMB1345	UNLOADING DETECTION RETURN	1	
			SPRING		
11		VSJ0069	PINCH SOLENOIDE	1	
12		VMA6608	PINCH SOLENOIDE BASE	1	
14		VML2091	UNLOADING DETECTION ARM	1	
15		VXP0819	POST ROLLER (A1) UNIT	1	
			(P6)		
16		VMS2800	LOWER FLANGE (P3)	2	
17		VMB1379	POST SPRING (P3)	3	
18		VMA6685	TURN ROLLER RETAINER	1	
19		VMS2807	POST BEARING RETAINER (B)	1	
			(P3)		
20		VMA6625	PINCH RETURN SPRING HOOK	1	
21		VMS3712	UPPER FLANGE (P4)	2	
22		VXP0823	LIMITER ROLLER (A) UNIT	2	
			(P3)		
23		VMS2806	POST BEARING RETAINER (A)	1	
			(P4)		
25		VED0140	A/C HEAD UNIT	1	AU-65-P,AU-65-E
25		VED0142	A/C HEAD UNIT	1	AU-63-P,AU-63-E,
					AU-62-P,AU-62-E
25-1		VBR0167	A/C HEAD	1	AU-65-P,AU-65-E
25-1		VBR0168	A/C HEAD	1	AU-63-P,AU-63-E,
					AU-62-P,AU-62-E
25-2		VMD1579	A/C HEAD HEIGHT ADJUSTMENT	1	
			BASE		
25-3		VXA4085	HEAD MOUNTING BASE UNIT	1	
25-4		VMX1441	ADJUST LOCK COLLAR	1	
25-5		VMB1843	ADJUST SPRING	1	
26		VMB2147	HEAD SPRING	1	
27		VEK3784	SUPPLY MAGNETIC SENSOR	1	
			MOUNT UNIT		
28		VBS0024	FE HEAD	1	AU-65-P,AU-65-E
28		VBS0043	FE HEAD	1	AU-63-P,AU-63-E,
					AU-62-P,AU-62-E
30		VMA7293	FE HEAD BASE	1	
31		VMA7295	MICROSWITCH BASE	1	
32		VMA6715	MICROSWITCH REGULATING	1	
			PLATE		
33		VSM0042	MICROSWITCH	1	
35		VMA6805	MOTOR HOLDER COVER	1	
36		VDG0215	RING DRIVE GEAR	1	
37		VMX1405	DRIVE GEAR SLEEVE A	1	
38		VMB1343	DRIVE GEAR PRESSURE SPRING	1	
39		VDG0216	JUNCTION GEAR	1	
41		VDB0899	BEARING	1	
42		VXP1056	WORM PULLEY UNIT	1	
43		VXA2287	LOADING MOTOR HOLDER UNIT	1	
44		VDV0156	LOADING BELT	1	
45		VMA6623	UNLOADING PHOTO MOUNT	1	
46		VEM0323	LOADING MOTOR UNIT	1	
46-1		VRD0030	LOADING MOTOR	1	
47		VEE3971	CONNECTOR UNIT	1	
48		VDB0371	THRUST BEARING	3	
49		VMD1596	DO PROTECTOR COVER	1	
50		VMA8285	DO PROTECTOR COVER BASE	1	
51		VJR3	CLAMPER	1	

Ref.No.		Part No.	Part Name & Description	Pcs	Remarks
52		VJR3	CLAMPER	1	AU-65-P,AU-65-E
100		XYN2+C5	SCREW	1	
101		XWG26	WASHER	1	
102		XWGV3D6G	WASHER	4	
103		XXE3C6FP	HEX HEAD SCREW	1	
104		XYN26+F6	SCREW	2	
105		XXE2C25FP	HEX HEAD SCREW	4	
106		XYN26+C4	SCREW	2	
107		XYN3+C5S	SCREW	6	
108		XUC3FP	E RING	4	
109		XWGV4D7G	WASHER	4	
110		XWGV4D9G	WASHER	2	
111		XWE4	WASHER	2	
112		XYN2+F10	SCREW	2	
113		XTV26+4F	SCREW	4	
114		XUC25FP	E RING	3	
115		XTV3+6FFZ	SCREW	10	
116		XTV3+8F	SCREW	7	
117		XTV3+6F	SCREW	4	
118		XTV3+10F	SCREW	2	
119		XWGV5D9G	WASHER	1	
120		XWG4FC	WASHER	1	
121		XYN3+F18	SCREW	1	
122		XSN26+12S	SCREW	1	
123		XXE3A8FP	HEX HEAD SCREW	1	
124		XNG4ES	NUT	1	
125		XTV26+6F	SCREW	2	
127		XWGV3F6G	WASHER	2	
128		XSN26+4	SCREW	1	

MECHANICAL CHASSIS ASSEMBLY (4)

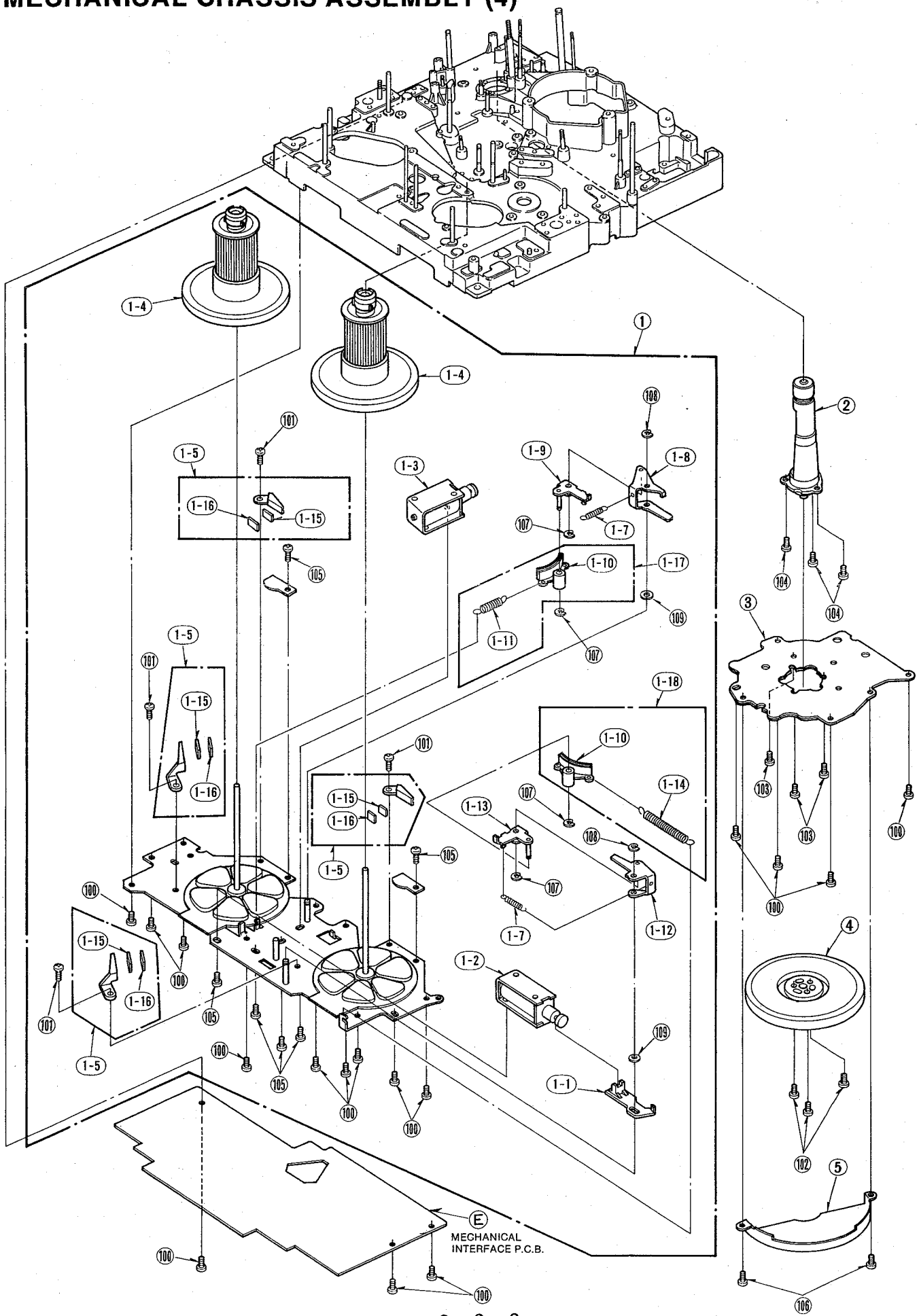

MECHANICAL CHASSIS ASSEMBLY (4)

Ref.No.		Part No.	Part Name & Description	Pcs	Remarks
1		VXA3995	REEL BASE UNIT	1	
1-1		VMM0240	BRAKE RELEASE ROD	1	
1-2		VSJ0098	TAKE-UP BRAKE SOLENOID	1	
1-3		VSJ0097	SUPPLY BARAKE SOLENOID	1	
1-4		VXR0191	REEL STAND UNIT	2	
1-5		VXA2046	FG HOLDER UNIT	4	
1-7		VMB2139	BRAKE SPRING (II)	2	
1-8		VXL1996	SUPPLY BRAKE ARM (1) UNIT	1	
1-9		VXL1997	SUPPLY BRAKE ARM (2) UNIT	1	
1-10		VXL1998	SUPPLY BRAKE ARM (3) UNIT	2	
1-11		VMB2137	SUPPLY BRAKE SPRING (II)	1	
1-12		VXL1999	TAKE-UP BRAKE ARM (1) UNIT	1	
1-13		VXL2000	TAKE-UP BRAKE ARM (2) UNIT	1	
1-14		VMB2138	TAKE-UP BRAKE SPRING (I)	1	
1-15		HW-300B	HALL ELEMENT	4	
1-16		VMD0621	FG SUPPORT (2)	4	
1-17		VXA4004	SUPPLY BRAKE ARM (3) UNIT	1	
1-18		VXA4005	TAKE-UP BRAKE ARM (3) UNIT	1	
2		VXD0110	CAPSTAN HOUSING UNIT	1	
3		VEK3699	CAPSTAN STATOR UNIT	1	
4		VXP0940	ROTOR UNIT	1	AU-65-P,AU-63-P,
					AU-62-P
4		VXP1235	ROTOR UNIT	1	AU-65-E,AU-63-E,
					AU-62-E
5		VSC2066	CAPSTAN MOTOR COVER	1	
100		XTV3+6F	SCREW	16	
101		XYN2+F4	SCREW	4	
102		XYN2+C10	SCREW	3	
103		XYN2+C6V	SCREW	3	
104		XYN26+C7V	SCREW	3	
105		XYN26+F4	SCREW	6	
106		XYNV26+K4S	SCREW	2	
107		XUC15FP	E RING	4	
108		XUC25FP	E RING	2	
109		XWGV3D6G	WASHER	2	

FRONT PANEL ASSEMBLY (AU-65-P, AU-65-E)

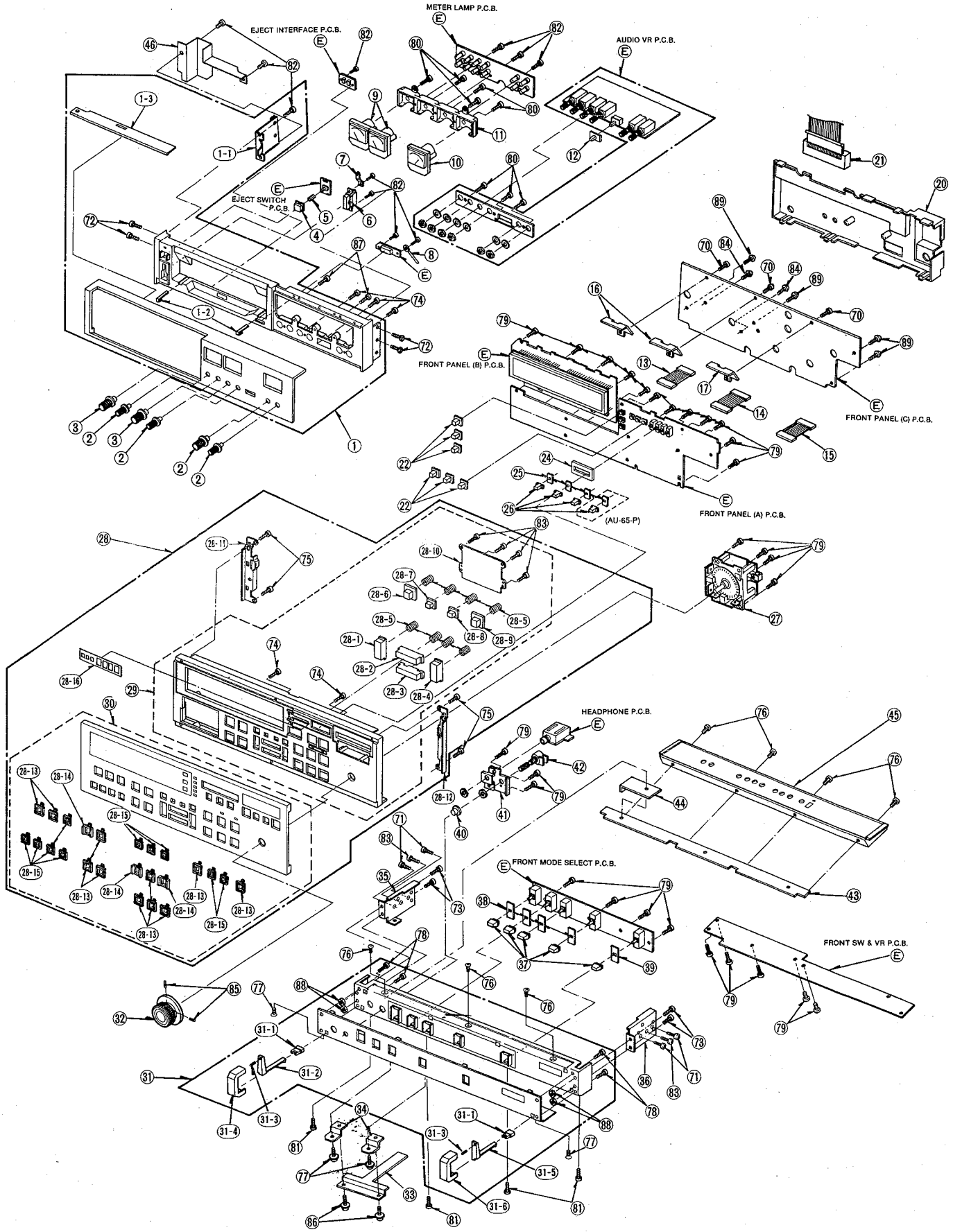

FRONT PANEL ASSEMBLY (AU-65-P, AU-65-E)

Ref.No.		Part No.	Part Name & Description	Pcs	Remarks
1		VYP2975	UPPER FRONT PANEL (1) UNIT	1	
1-1		VMP1006	GND ANGLE	1	
1-2		VGK1511	CASSETTE GUIDE	2	
1-3		VMP0830	FRONT (U) PROTECTOR ANGLE	1	
2		VXU0768	VR KNOB (S)	4	
3		VXU0766	VR KNOB (B)	2	
4		VGU3394	EJECT BUTTON	1	
5		VMB1730	EJECT BUTTON SPRING	1	
6		EST15372T	POWER SWITCH	1	AU-65-P
6		EST15367S	POWER SWITCH	1	AU-65-E
7		VMP1008	EJECT SWITCH ANGLE	1	
8		VJR3	CLUMPER	1	
9		VSE0101	AUDIO METER	2	
10		VSE0109	TRACKING METER	1	
11		VGQ1051	METER COVER	1	
12		VGU2085	SWITCH KNOB	1	
13		VEE3171	CONNECTOR CABLE	1	
14		VEE3170	CONNECTOR CABLE	1	
15		VEE3799	CONNECTOR CABLE	1	
16		VMP0964	P.C.B. SUPPORT ANGLE (A)	2	
17		VMP1926	P.C.B. SUPPORT ANGLE (B)	1	
20		VMZ1160	FRONT BOARD CAVER	1	
21		VEE3224	20P FLAT CABLE	1	
22		VGU4359	RESET BUTTON	6	
24		VMX1328	SLIDE SWITCH SPACER	1	
25		VGH0520	SWITCH COVER	4	3pcs: AU-65-E
26		VGU2089	SLIDE SWITCH KNOB	4	3pcs: AU-65-E
27		VSR0083	SEARCH DIAL	1	
28		VYP2194	FRONT PANEL (M) 1 UNIT	1	AU-65-P
28		VYP3530	FRONT PANEL (M) 1 UNIT	1	AU-65-E
28-1		VGU4117	EDIT IN BUTTON	1	
28-2		VGU4116	EDIT SET BUTTON	1	
28-3		VGU4115	GO-TO BUTTON	1	
28-4		VGU4118	EDIT OUT BUTTON	1	
28-5		VMB1799	SPRING	8	
28-6		VGU4119	AUDIO IN BUTTON	1	
28-7		VGU4114	TRIM (-) BUTTON	1	
28-8		VGU4113	TRIM (+) BUTTON	1	
28-9		VGU4120	AUDIO OUT BUTTON	1	
28-10		VMP1529	EDIT BUTTON GUIDE	1	
28-11		VMP0562	PANEL HOLDER ANGLE (L)	1	
28-12		VMP0561	PANEL HOLDER ANGLE (R)	1	
28-13		VGK1595	SWITCH GUARD	11	
28-14		VGF0206	SWITCH GUARD	3	
28-15		VGK1512	SWITCH GUARD	10	
28-16		VGH1492	TC BUTTON NAME PLATE	1	AU-65-P
28-16		VGH2627	TC BUTTON NAME PLATE	1	AU-65-E
29		VYP2203	FRONT PANEL (M) 2 UNIT	1	
30		VYP2204	FRONT ALMINUM PANEL UNIT	1	AU-65-P
30		VYP3529	FRONT ALMINUM PANEL UNIT	1	AU-65-E
31		VYP2977	CONTROL PANEL (1) UNIT	1	
31-1		VGF0147	HANDLE COVER	2	
31-2		VML1657	LOCK RELEASE LEAVER (L)	1	
31-3		VMB1333	SPRING	2	
31-4		VKH0111	HANDLE (L)	1	
31-5		VML1656	LOCK RELEASE LEVER (R)	1	
31-6		VKH0110	HANDLE (R)	1	
32		VXU0767	SEARCH DIAL KNOB UNIT	1	
33		VMP0861	PULL GUIDE ANGLE	1	
34		VMP1061	PULL GUIDE HOLDER ANGLE	2	
35		VMP1057	RAIL HOLDER ANGLE (L)	1	
36		VMP1056	RAIL HOLDER ANGLE (R)	1	
37		VGU2080	SWITCH KNOB	5	
38		VMZ0655	SWITCH SHEET	4	
39		VMZ1194	SWITCH SHEET	1	
40		VGU3121	HEADPHONE VR KNOB	1	
41		VMP0589	HEADPHONE MOUNT ANGLE	1	
42		EWJD5AP15A14	HEADPHONE VOLUME	1	AU-65-P
42		EWGG0AP15A14	HEADPHONE VOLUME	1	AU-65-E
43		VMP0587	PANEL HOLDER ANGLE	1	
44		VMP0932	GND ANGLE	1	
45		VYP2978	CONTROL PANEL (2) UNIT	1	AU-65-P
45		VYP3531	CONTROL PANEL (2) UNIT	1	AU-65-E
46		VMZ1637	AC SWITCH BARRIER	1	

Ref.No.		Part No.	Part Name & Description	Pcs	Remarks
70		XSB3+5S	SCREW	3	
71		XSB3+6S	SCREW	4	
72		XSB3+8FZS	SCREW	4	
73		XSB3+8S	SCREW	4	
74		XSN3+6S	SCREW	5	
75		XSN3+8S	SCREW	4	
76		XSS3+6FCS	SCREW	7	
77		XSS3+8FCS	SCREW	4	
78		XSS3+10S	SCREW	4	
79		XTN4+10G	SCREW	28	
80		XTN4+10J	SCREW	8	
81		XTS3+8GFC	SCREW	4	
82		XTV3+8J	SCREW	11	
83		XTV3+10J	SCREW	2	
84		XTV4+15G	SCREW	2	
85		XXEV3W6FPS	HEX SCREW	2	
86		XYN3+F5S	SCREW	2	
87		XYN3+C18S	SCREW	2	
88		XNG3ES	NUT	4	
89		XTV4+20G	SCREW	4	
90		XTV3+8G	SCREW	4	

FRONT PANEL ASSEMBLY (AU-63-P, AU-63-E, AU-62-P, AU-62-E)

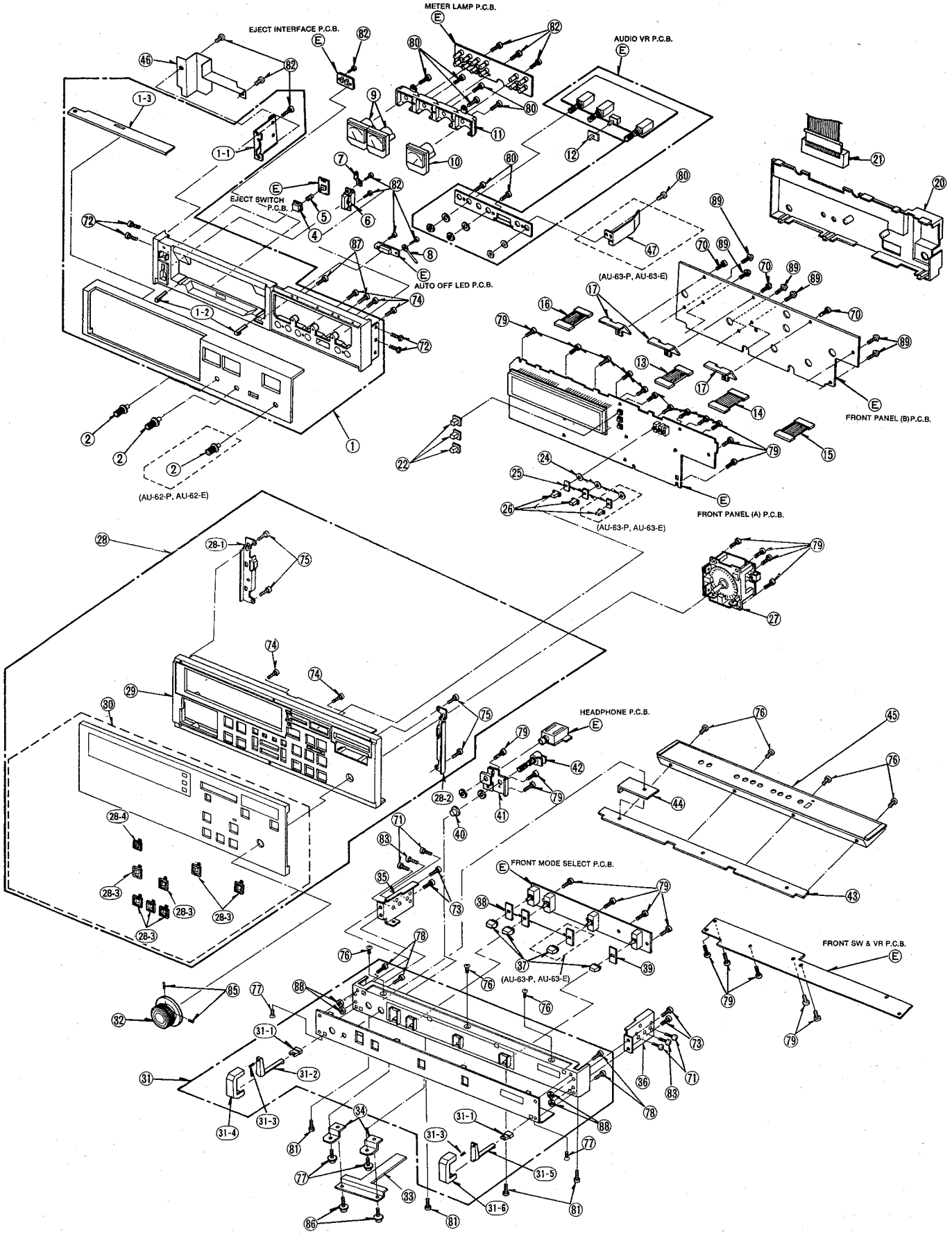

FRONT PANEL ASSEMBLY (AU-63-P, AU-63-E, AU-62-P, AU-62-E)

Ref.No.		Part No.	Part Name & Description	Pcs	Remarks
1		VYP3221	UPPER FRONT PANEL (1) UNIT	1	AU-63-P,AU-63-E
1		VYP3134	UPPER FRONT PANEL (1) UNIT	1	AU-62-P,AU-62-E
1-1		VMP1006	GND ANGLE	1	
1-2		VGK1511	CASSETTE GUIDE	2	
1-3		VMP0830	FRONT (U) PROTECTOR ANGLE	1	
2		VXU0768	VR KNOB (S)	3	2pcs: AU-63-P,AU-63-E
4		VGU3394	EJECT BUTTON	1	
5		VMB1730	EJECT BUTTON SPRING	1	
6		EST15372T	POWER SWITCH	1	AU-63-P,AU-62-P
6		EST15367S	POWER SWITCH	1	AU-63-E,AU-62-E
7		VMP1008	EJECT SWITCH ANGLE	1	
8		VJR3	CLUMPER	1	
9		VSE0101	AUDIO METER	2	
10		VSE0112	TRACKING METER	1	
11		VGQ1051	METER COVER	1	
12		VGU2085	SWITCH KNOB	1	
13		VEE5375	CONNECTOR CABLE	1	
14		VEE5374	CONNECTOR CABLE	1	
15		VEE5373	CONNECTOR CABLE	1	
16		VEE5376	CONNECTOR CABLE	1	
17		VMP1926	P.C.B. SUPPORT ANGLE (B)	3	
20		VMZ1160	FRONT BOARD CAVER	1	
21		VEC0682	20P FLAT CABLE	1	
22		VGU4359	RESET BUTTON	3	
24		VMX1072	SLIDE SWITCH SPACER	3	2pcs: AU-63-P,AU-62-P
25		VGH0520	SWITCH COVER	3	2pcs: AU-63-P,AU-62-P
26		VGU2089	SLIDE SWITCH KNOB	3	2pcs: AU-63-P,AU-62-P
27		VSR0083	SEARCH DIAL	1	
28		VYP2863	FRONT PANEL (M) 1 UNIT	1	AU-63-P,AU-62-P
28		VYP3528	FRONT PANEL (M) 1 UNIT	1	AU-63-E,AU-62-E
28-1		VMP0562	PANEL HOLDER ANGLE (L)	1	
28-2		VMP0561	PANEL HOLDER ANGLE (R)	1	
28-3		VGK1595	SWITCH GUARD	7	
28-4		VGK1512	SWITCH GUARD	1	
29		VYP2138	FRONT PANEL (M) 2 UNIT	1	
30		VYP2865	FRONT ALMINUM PANEL UNIT	1	AU-63-P,AU-62-P
30		VYP3527	FRONT ALMINUM PANEL UNIT	1	AU-63-E,AU-62-E
31		VYP3145	CONTROL PANEL (1) UNIT	1	AU-63-P,AU-63-E
31		VYP3136	CONTROL PANEL (1) UNIT	1	AU-62-P,AU-62-E
31-1		VGF0147	HANDLE COVER	2	
31-2		VML1657	LOCK RELEASE LEAVER (L)	1	
31-3		VMB1333	SPRING	2	
31-4		VKH0111	HANDLE (L)	1	
31-5		VML1656	LOCK RELEASE LEVER (R)	1	
31-6		VKH0110	HANDLE (R)	1	
32		VXU0767	SEARCH DIAL KNOB UNIT	1	
33		VMP0861	PULL GUIDE ANGLE	1	
34		VMP1061	PULL GUIDE HOLDER ANGLE	2	
35		VMP1057	RAIL HOLDER ANGLE (L)	1	
36		VMP1056	RAIL HOLDER ANGLE (R)	1	
37		VGU2080	SWITCH KNOB	4	3pcs: AU-62-P,AU-62-E
38		VMZ0655	SWITCH SHEET	3	2pcs: AU-62-P,AU-62-E
39		VMZ1194	SWITCH SHEET	1	
40		VGU3121	HEADPHONE VR KNOB	1	
41		VMP0589	HEADPHONE MOUNT ANGLE	1	
42		EWJD5AP15A14	HEADPHONE VOLUME	1	AU-63-P,AU-62-P
42		EWGG0AP15A14	HEADPHONE VOLUME	1	AU-63-E,AU-62-E
43		VMP0587	PANEL HOLDER ANGLE	1	
44		VMP0932	GND ANGLE	1	
45		VYP2978	CONTROL PANEL (2) UNIT	1	AU-63-P,AU-62-P
45		VYP3531	CONTROL PANEL (2) UNIT	1	AU-63-E,AU-62-E
46		VMZ1637	AC SWITCH BARRIER	1	
47		VMP2910	VR P.C.B. HOLDER ANGLE	1	AU-63-P,AU-63-E
70		XSB3+5S	SCREW	3	
71		XSB3+6S	SCREW	4	
72		XSB3+8FZS	SCREW	4	
73		XSB3+8S	SCREW	4	
74		XSN3+6S	SCREW	5	
75		XSN3+8S	SCREW	4	
76		XSS3+6FCS	SCREW	7	
77		XSS3+8FCS	SCREW	4	
78		XSS3+10S	SCREW	4	

Ref.No.		Part No.	Part Name & Description	Pcs	Remarks
79		XTN4+10G	SCREW	28	
80		XTN4+10J	SCREW	8	
81		XTS3+8GFC	SCREW	4	
82		XTV3+8J	SCREW	11	
83		XTV3+10J	SCREW	2	
85		XXEV3W6FPS	HEX SCREW	2	
86		XYN3+F5S	SCREW	2	
87		XYN3+C18S	SCREW	2	
88		XNG3ES	NUT	4	
89		XTV4+20G	SCREW	6	

REAR JACK PANEL ASSEMBLY

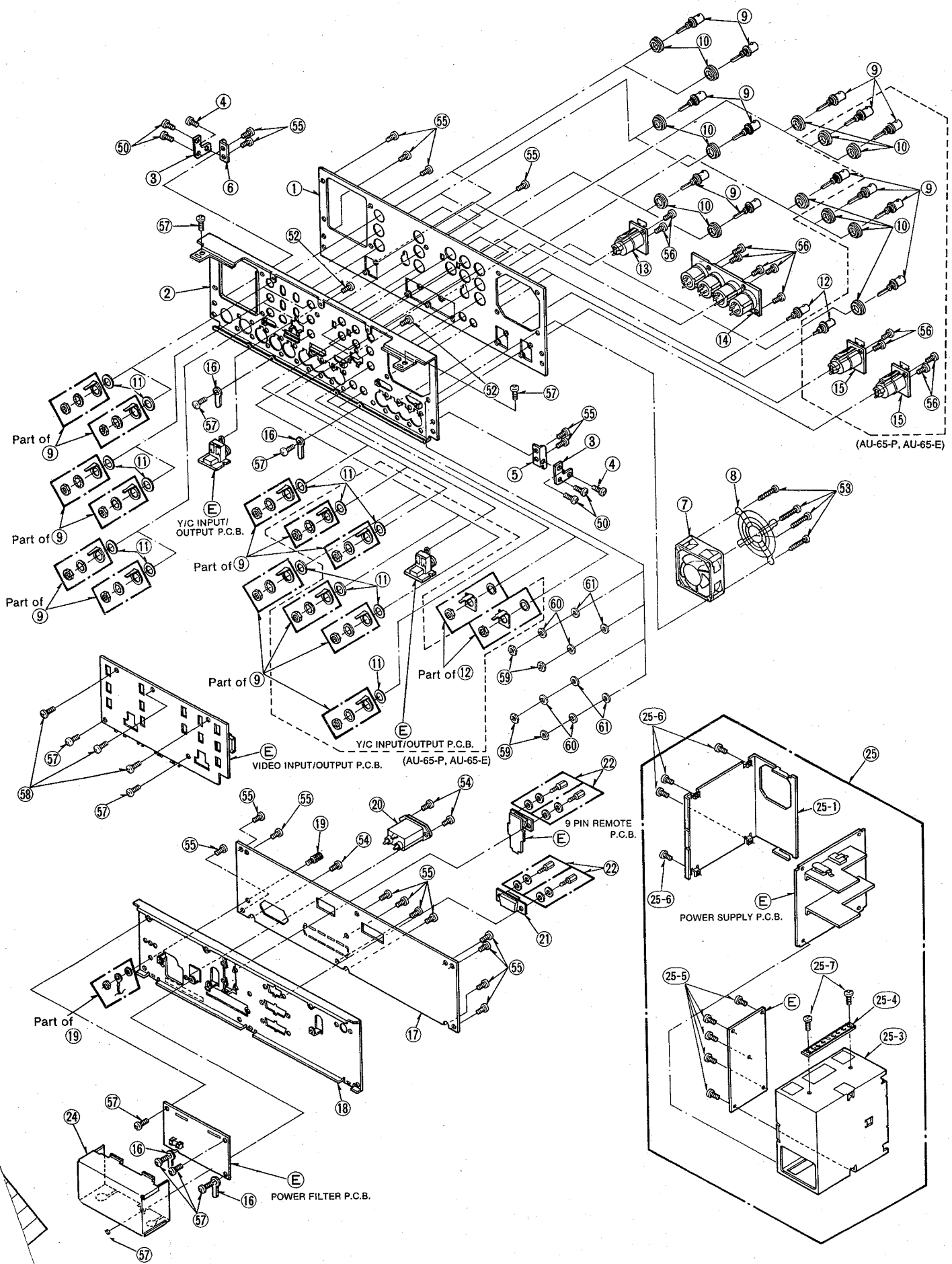

REAR JACK PANEL ASSEMBLY

Ref.No.		Part No.	Part Name & Description	Pcs	Remarks
1		VGH2284	JACK NAME PLATE (UPPER)	1	AU-65-P,AU-65-E
1		VGH2389	JACK NAME PLATE (UPPER)	1	AU-63-P,AU-63-E,
					AU-62-P,AU-62-E
2		VJH0583	JACK PLATE (UPPER)	1	
3		VMP1007	JACK ROTARY PLATE	2	
4		VHD0325	JACK ANGLE SCREW	2	
5		VMP0994	JACK ROTARY ANGLE (L)	1	
6		VMP0960	JACK ROTARY ANGLE (R)	1	
7		VRF0061	FUN MOTOR	1	
8		VGF0335	FUN MOTOR COVER	1	
9		VJS1087	BNC CONNECTOR	13	8pcs: AU-63-P,AU-63-E
					AU-62-P,AU-62-E
10		VMZ0631	BNC NUT	13	8pcs: AU-63-P,AU-63-E
					AU-62-P,AU-62-E
11		VMZ0630	WASHER	13	8pcs: AU-63-P,AU-63-E
					AU-62-P,AU-62-E
12		VJJ0091	BNC CONNECTOR	2	1pcs: AU-63-P,AU-63-E
					AU-62-P,AU-62-E
13		VJP1894	XLR CONNECTOR	1	
14		VJP2524	XLR (4PC) CONNECTOR	1	
15		VJS2614	XLR CONNECTOR	2	AU-65-P,AU-65-E
16		VJR3	CLUMPER	4	
17		VGH2285	JACK NAME PLATE (LOWER)	1	AU-65-P,AU-63-P,
					AU-62-P
17		VGH2551	JACK NAME PLATE (LOWER)	1	AU-65-E,AU-63-E,
					AU-62-E
18		VJH0584	JACK PLATE (LOWER)	1	
19		VJH0082	GND TERMINAL	1	
20		VJP0083	AC INLET	1	
21		VEE6377	15P REMOTE CONNECTOR	1	
22		VXQ0102	HEX A BASS	4	
24		VMZ1597	POWER FILTER COVER	1	
25		VYK3004	POWER UNIT	1	NTSC
25		VYK3637	POWER UNIT	1	PAL
25-1		VMP2698	COVER	1	
25-3		VMP2696	FRAME	1	
25-4		VKH0230	HANDLE	1	
25-5		XYNV3+K8S	SCREW	4	
25-6		XTV3+8F	SCREW	4	
25-7		XYN4+F8S	SCREW	2	
50		XYN3+C6S	SCREW	4	
52		XSN3+6FZS	SCREW	2	
53		XSN4+35FCS	SCREW	4	
54		XSB3+8FZS	SCREW	3	
55		XTB3+6FFZ	SCREW	14	
56		XTN26+6FFY	SCREW	11	
57		XTV3+6F	SCREW	10	
58		XYE3+EF8	SCREW	3	
59		XNG4ES	NUT	4	
60		XWA4B	SPRING WASHER	4	
61		XWG4	WASHER	4	

CHASSIS FRAME ASSEMBLY

Ref.No.		Part No.	Part Name & Description	Pcs	Remarks
1		VMP2607	SIDE FRAME (L)	1	
2		VMP0842	TOP MOUNT PLATE (L)	1	
3		VMP0616	CHASSIS FRAME (L)	1	
4		VYQ0013	RAIL UNIT	2	
5		VMP2616	JACK MOUNT ANGLE (BOTTOM)	2	
6		VYQ0252	ROTARY ANGLE (L) UNIT	1	
7		VGQ2025	B BOARD GUIDE RAIL	2	
8		VMP2596	POWER MOUNT ANGLE	1	
9		VMP2612	POWER FRAME	1	
10		VRF0061	FUN MOTOR	1	
11		VGF0335	FUN MOTOR COVER	1	
12		VJF0022	M CLUMPER	11	
13		VMP2610	GUIDE FRAME (M)	1	
14		VMP0618	CHASSIS FRAME (M)	1	
15		VMP2783	TC BOARD STOPPER ANGLE	1	
16		VMP2693	FOOT MOUNT ANGLE	1	
17		VGQ1050	PULL GUIDE	1	
18		VKA0027	FOOT	4	
19		VMP2613	B BOARD COVER	1	
20		VMP2614	FRONT FRAME	1	
21		VMP2598	P.C.B. MOUNT ANGLE (B)	1	
22		VMP0617	CHASSIS FRAME (R)	1	
23		VMP2608	CENTER FRAME	1	
24		VXA3967	B P.C.B. SHIELD PLATE	1	
25		VMP2620	W MOTHER P.C.B. ANGLE	2	
26		VJR3	CLUMPER	1	
27		VMX1314W075	FREE BUSHING	1	
28		VGQ2024	W BOARD GUIDE RAIL	2	
29		VMP2611	GUIDE FRAME (S)	1	
30		VHN0011	LATCH	4	
31		VGH2288	SUB FRONT PANEL	1	AU-65-P
31		VGH2549	SUB FRONT PANEL	1	AU-65-E
31		VGH2401	SUB FRONT PANEL	1	AU-63-P,AU-62-P
31		VGH2550	SUB FRONT PANEL	1	AU-63-E,AU-62-E
32		VYQ0251	ROTARY ANGLE (R) UNIT	1	
33		VMP2739	AT BOARD MOUNT ANGLE	1	AU-63-P,AU-63-E
			(BOTTOM)		
34		VMP0610	SIDE FRAME (R)	1	
35		VMP2615	FUN MOTOR MOUNT ANGLE	1	
36		VMP2594	TOP MOUNT PLATE (R)	1	
37		VMX1841	P.C.B. CUSHION (W)	1	
38		VMX1558	WASHER	4	
39		VMP0692	GUIDE FRAME MOUNT ANGLE	1	
40		VMP0683	GUIDE FRAME (L2)	1	
41		VMP2609	GUIDE FRAME (L)	1	
42		VMP1525	GUIDE FRAME (L) PROTECTOR	1	
			ANGLE		
43		VMZ1590	CUT SHEET (BIG)	1	
44		VMZ1591	CUT SHEET (SMALL)	1	
45		VMX1314W146	FREE BUSHING	1	
46		VMP2617	W MOTHER P.C.B. ANGLE (F)	1	
47		VMP2618	W MOTHER P.C.B. ANGLE (C)	1	
48		VMP2619	W MOTHER P.C.B. ANGLE (B)	1	
49		VSC2341	SHIELD CASE LID	1	
50		VMP0972	P.C.B. MOUNT ANGLE	1	
51		VMP2600	SWITCH ANGLE	1	
54		VMX1184	FREE BUSHING	1	
80		XSB3+5S	SCREW	4	
81		XSB3+6S	SCREW	12	
82		XSN4+35FCS	SCREW	4	
83		XSS3+5S	SCREW	2	
84		XTB3+6F	SCREW	4	
85		XTV3+6F	SCREW	72	
86		XTV3+6FR	SCREW	19	
87		XTV3+8J	SCREW	4	
88		XYN3+C6S	SCREW	4	
89		XYN4+C14S	SCREW	4	
90		XYN4+F6S	SCREW	4	
91		XYNV3+K6FR	SCREW	4	
100		VMP2738	HOLDER ANGLE	1	
101		VSC2299	SHIELD CAVER	1	

Ref.No.		Part No.	Part Name & Description	Pcs	Remarks
102		XTV3+6F	SCREW	2	
103		XTV3+6F	SCREW	1	

CHASSIS FRAME ASSEMBLY

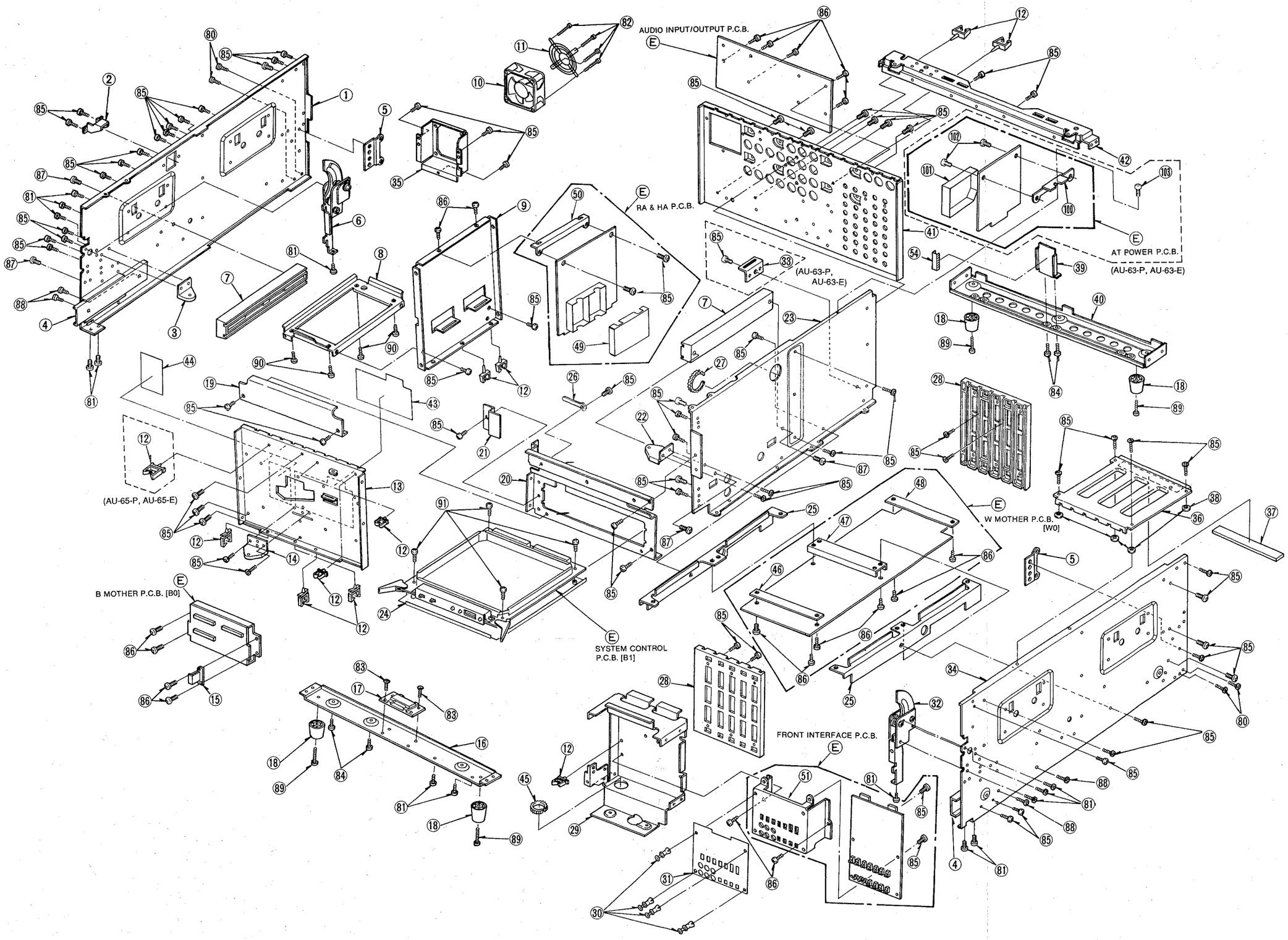

6—2—17

CASSETTE COMPARTMENT ASSEMBLY

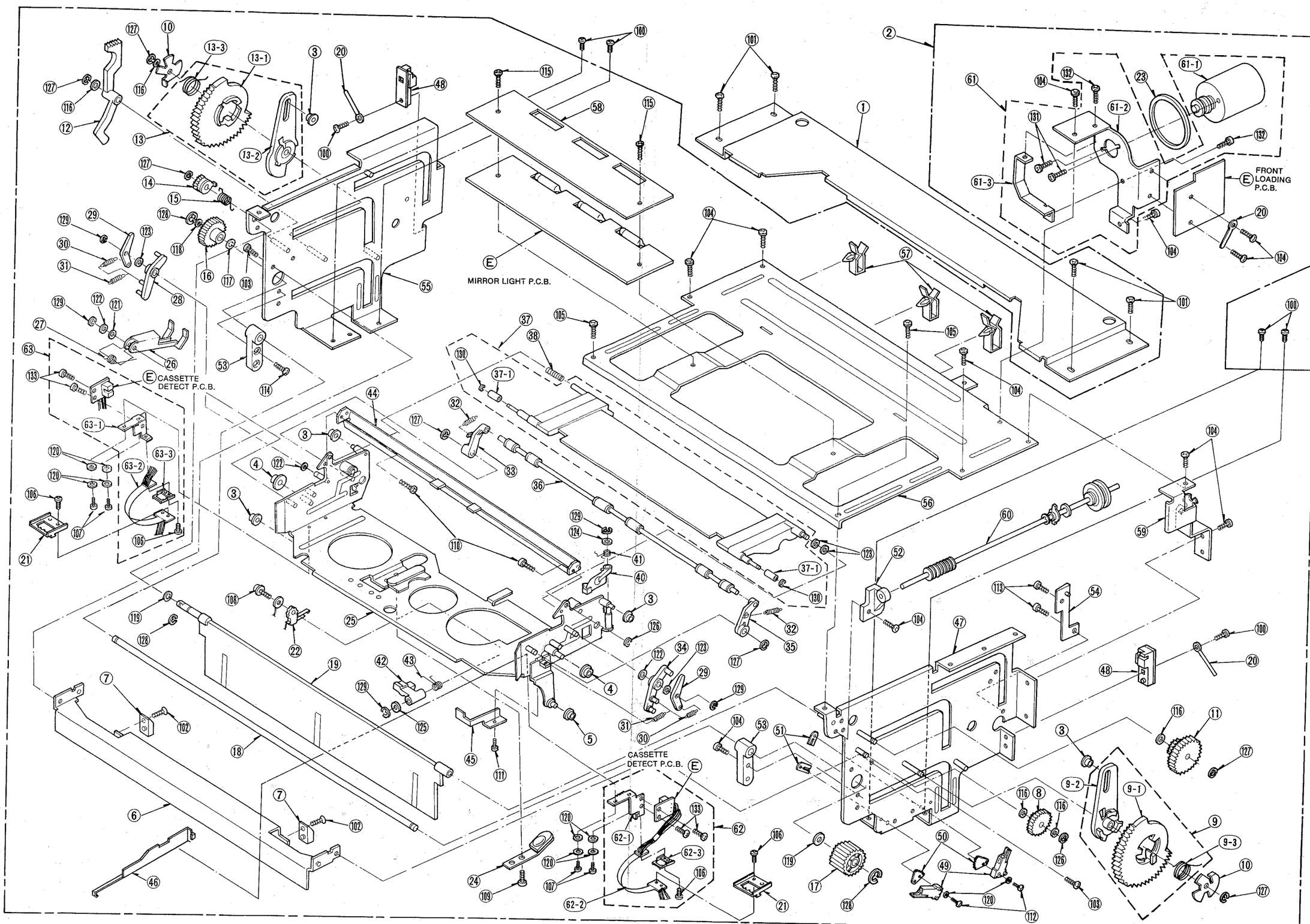

6—2—18

CASSETTE COMPARTMENT ASSEMBLY

Ref.No.		Part No.	Part Name & Description	Pcs	Remarks
1		VMA6661	CARRIAGE MOUNT PLATE	1	
2		VXA3756	FRONT LOADING UNIT	1	
3		VDP1020	GUIDE ROLLER (A)	5	
4		VDP1021	GUIDE ROLLER (B)	2	
5		VDP1022	GUIDE ROLLER (C)	1	
6		VMA6639	FRONT GUIDE ANGLE	1	
7		VMD1048	CASSETTE GUIDE	1	
8		VDG0226	RELAY GEAR	1	
9		VXL1315	WIPER (R) UNIT	1	
9-1		VDG0229	WIPER GEAR (R)	1	
9-2		VML1683	WIPER ARM (R)	1	
9-3		VMB1384	WIPER SPRING (R)	1	
10		VMD0748	WIPER SPRING HOLDER	2	
11		VDG0500	WORM GEAR	1	
12		VML1685	PANEL OPENER	1	
13		VXL1922	WIPER (L) UNIT	1	
13-1		VDG0605	WIPER GEAR (L)	1	
13-2		VML2316	WIPER ARM (L)	1	
13-3		VMB1385	WIPER SPRING (L)	1	
14		VDG0231	PANEL GEAR	1	
15		VMB1386	BLINDER PANEL GEAR	1	
16		VDG0603	MAIN SHAFT GEAR (L)	1	
17		VDG0502	MAIN SHAFT GEAR (R)	1	
18		VMS3845	MAIN SHAFT A	1	
19		VYF0589	BLINDER PANEL	1	
20		VJR3	CLAMPER	3	
21		VMD1383	FLAT CABLE HOLDER (LOWER)	2	
22		VSH0034	LEAF SWITCH	1	
23		VDV0157	LOADING BELT	1	
24		VXL1626	CASSETTE KEEPER UNIT	1	
25		VXA2993	CASSETTE HOLDER	1	
26		VXL2065	CASSETTE OPENER UNIT	1	
27		VMB1547	CASSETTE SPRING	1	
28		VML2151	KICK LEVER (L) UNIT	1	
29		VML1681	KICK DRIVE LEVER	2	
30		VMB1380	KICK DRIVE LEVER SPRING	2	
31		VMB1381	KICK LEVER SPRING	2	
32		VMB1382	PRESS LEVER SPRING	2	
33		VML2149	PRESS LEVER (L)	1	
34		VML2150	KICK LEVER (R) UNIT	1	
35		VML2148	PRESS LEVER (R)	1	
36		VXJ0038	PRESS ROLLER SHAFT UNIT	1	
37		VXA2322	MIRROR UNIT	1	
37-1		VDP1023	MIRROR ROLLER	2	
38		VMB1399	MIRROR SPRING	1	
40		VXL1278	RELEASE LEVER UNIT	1	
41		VMB1383	RELEASE LEVER SPRING	1	
42		VML1845	CASSETTE DETECT LEVER	1	
43		VMB1548	CASSETTE DETECT SPRING	1	
44		VMA7000	PRESS ROLLER SHAFT STOPPER	1	
45		VMA7172	FIXING ANGLE	1	
46		VMD1109	CASSETTE GUIDE (R)	1	
47		VXA2317	RIGHT SIDE PLATE (1) UNIT	1	
48		VEK2414	PHOTO TR UNIT	2	
49		VSM0048	SWITCH	2	
50		VMA6663	SWITCH ADJUSTMENT PLATE	2	
51		VMA6664	SWITCH MOUNT PLATE	2	
52		VMD0747	SHAFT BEARING	1	
53		VMD0746	MAIN SHAFT BEARING	2	
54		VMA6637	RELEASE LEVER HOLDER	1	
55		VXA2319	LEFT SIDE PLATE	1	
56		VMA6643	TOP PLATE	1	
57		VGQ0107	MINI-CLAMPER	3	
58		VMZ0729	MIRROR LIGHT P.C.B. COVER	1	
59		VMA6662	WORM SHAFT MOUNT PLATE	1	
60		VXJ0073	WORM SHAFT (1) UNIT	1	
61		VEM0265	FRONT LOADING MOTOR UNIT	1	
61-1		VEM0228	MOTOR UNIT	1	
61-2		VMA6649	LOADING MOTOR MOUNT ANGLE	1	
61-3		VMA6794	BELT COVER	1	
62		VES0351	CASSETTE DETECT (R) UNIT	1	
62-1		VMA6879	SENSOR ANGLE (R)	1	
62-2		VJB80098	FLAT CABLE (R)	1	
62-3		VMD1382	FLAT CABLE HOLDER (UPPER)	1	
63		VES0352	CASSETTE DETECT (L) UNIT	1	

Ref.No.		Part No.	Part Name & Description	Pcs	Remarks
63-1		VMA6880	SENSOR DETECT (L)	1	
63-2		VJB80099	FLAT CABLE (L)	1	
63-3		VMD1382	FLAT CABLE HOLDER (UPPER)	1	
100		XTV3+8F	SCREW	6	
101		XYN3+F6S	SCREW	4	
102		XTS3+6FFZ	SCREW	2	
103		XYN3+C4S	SCREW	2	
104		XTV3+6F	SCREW	12	
105		XTN3+4F	SCREW	2	
106		XYN2+F5	SCREW	4	
107		XYN2+C4	SCREW	3	
108		XYN2+C6	SCREW	1	
109		XYN26+F4FZ	SCREW	1	
110		XYN26+C4	SCREW	2	
111		XYN2+C3	SCREW	1	
112		XSN2+10	SCREW	2	
113		XSN2+3	SCREW	2	
115		XST3+4RS	SCREW	2	
116		XWGV4D7G	WASHER	5	
117		XWGV5Y9G	WASHER	1	
118		XWGV5F8G	WASHER	1	
119		XWGV5D9G	WASHER	2	
120		XWG2	WASHER	10	
121		XWGV3Z6G	WASHER	1	
122		XWGV3Y6G	WASHER	3	
123		XWGV3D6G	WASHER	4	
124		XWE26	WASHER	1	
125		XWGV3D5G	WASHER	1	
126		XUC25FP	E-RING	2	
127		XUC3FP	E-RING	8	
128		XUC4FP	E-RING	3	
129		XUC2FP	E-RING	5	
130		XUC15FP	E-RING	2	
131		XYN3+C4	SCREW	2	
132		XTV26+5F	SCREW	2	
133		XTV26+4F	SCREW	4	

PACKING

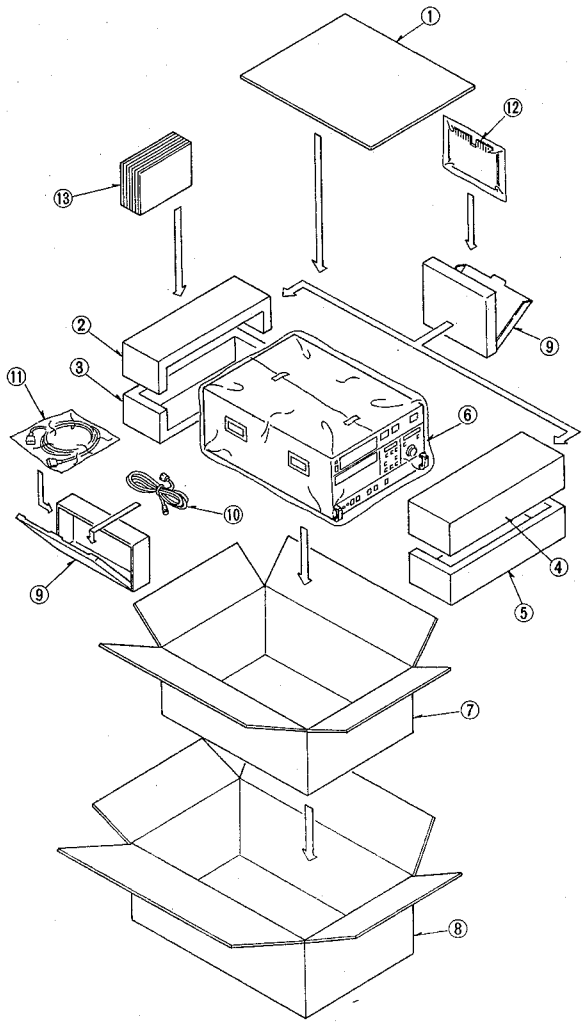

PACKING

Ref.No.		Part No.	Part Name & Description	Pcs	Remarks
1		VPN2698	TOP PAD	1	
2		VPN2665	UPPER REAR CUSHION	1	
3		VPN2697	LOWER REAR CUSHION	1	
4		VPN2664	UPPER FRONT CUSHION	1	
5		VPN2696	LOWER FRONT CUSHION	1	
6		VPF0296	COVER	1	
7		VPG5146	PACKING CASE (IN)	1	
8		VPG5417	PACKING CASE (OUT)	1	
9		VPK1243	ACCESSORIES BOX	1	
10		VJA0472	POWER CODE	1	AU-65-P,AU-63-P,
					AU-62-P
10		VJA0173	POWER CODE (E)	1	AU-65-E,AU-63-E,
					AU-62-E
10		VJA0172	POWER CODE (B)	1	AU-65-E,AU-63-E,
					AU-62-E
10		VJA0258	POWER CODE (A)	1	AU-65-E,AU-63-E,
					AU-62-E
11		VJA0561	9P CABLE	1	
12		VFK0600	EXTENSION BOARD (W)	1	
13		VQT4134	OPERATING INSTRUCTIONS	1	AU-63-E,AU-62-E
			(GERMAN)		
13		VQT4135	OPERATING INSTRUCTIONS	1	AU-63-E,AU-62-E
			(FRRENCH)		
13		VQT4136	OPERATING INSTRUCTIONS	1	AU-63-E,AU-62-E
			(SPANISH)		
13		VQT4137	OPERATING INSTRUCTIONS	1	AU-65-E
			(GERMAN)		
13		VQT4138	OPERATING INSTRUCTIONS	1	AU-65-E
			(FRRENCH)		
13		VQT4139	OPERATING INSTRUCTIONS	1	AU-65-E
			(SPANISH)		

Time Code Generator/Reader

AU-F65

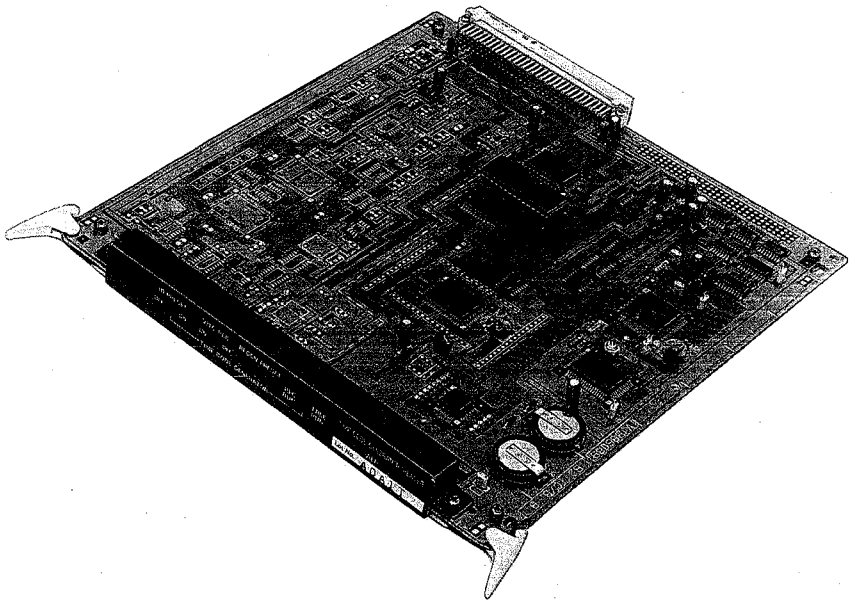

INTRODUCTION

The AU-F65 is a Plug-in Time Code Generator and Reader for use with the AU-65, AU-63 or the AU-62. The AU-F65 provides a precise timing signal, enabling the AU-65, AU-63 and AU-62 to perform highly accurate editing.
This section contains technical information covering the following points, adjustment procedures, block diagrams, schematic diagrams, P.C.Board diagrams, and parts list of the AU-F65.

1.TEST & SERVICE EQUIPMENT

To perform the electrical adjustment completely the following is required.

1. Frequency counter
2. Extension Board.(VFK0601)
3. AU-65, AU-63 or AU-62

2.ADJUSTMENT

2-1. TRIMMER ADJUSTMENT

TEST POINT	MODE	TAPE USED	M.EQ.	INPUT SIGNAL	ADJUSTMENT
TP 6	EJECT	-----	FREQUENCY COUNTER	---------	C19
1. Confirm that the frequency at TP6 is 512.000 ± 0.002Hz. 2. If it is not specification, adjust C19 as mentioned above.			TP6 : 512.000 ± 0.002Hz		

3.CONTROLS AND THEIR FUNCTIONS

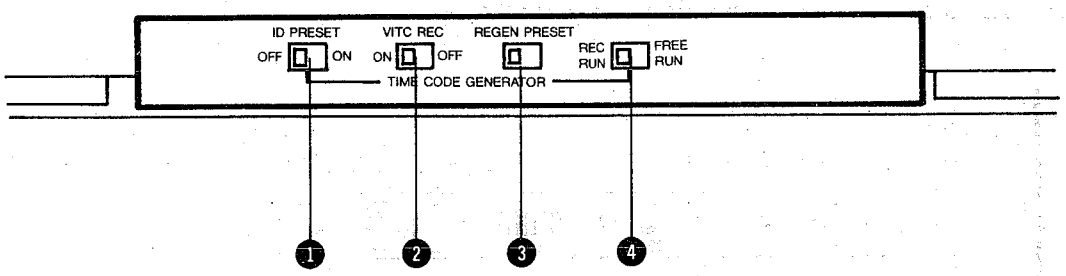

B2 TCG/TCR board

❶ ID PRESET ON/OFF Switch (Shipment mode: OFF)

This switch is used to switch the ID code.
Any frequently-set user bit such as VTR number for example can be set as an original VTR ID code in advance. This ID code can be called upon request.
The following can be switched when the "UB REAL TIME" set-up menu No. 6008 is OFF.

ON: When the VTR is in the STOP mode, the ID code can be set.
When the VTR is in the recording mode, the ID code can be recorded.

OFF: The ID code is not set, and the normal user bits value is set/recorded/displayed.

❷ VITC REC ON/OFF Switch (Shipment mode: ON)

This switch is used to switch the VITC recording mode.
VITC is a time code which can be recorded in the video signal vertical blanking. By recording VITC the time code value can be read at a tape speed lower than ±1/8.

ON: The VITC generated by the internal time code generator is recorded.
The VITC is recorded together with the video signal.

OFF: When VITC is transmitted together with the video input signals, this VITC is recorded. Otherwise, the VITC is not recorded on tape.

❸ REGEN/PRESET Selector Switch (Shipment mode: REGEN)

REGEN: A time code synchronized with an external time code or the time code on the playback tape is generated.

PRESET: Set the switch to this position to directly record a time code generated by the internal generator or an external time code.

For details, refer to page 7 "5-4-3. Setting of the REGEN/PRESET and INT/EXT Switches".

❹ REC RUN/FREE RUN Selector Switch (Shipment mode: REC RUN)

REC RUN: The generator counts a time code value only when the VTR is recording.

FREE RUN: The generator counts a time code value in the same way as a clock, regardless of the operating mode of the VTR.

Cautions for use with Player VTR AU-62/63

- AU-62/63 are designed exclusively for use as a playback VTR, therefore setting/recording of the time code/user bits cannot be performed.
- The AU-62/63 have not the external time code reader, therefore external time code cannot be monitored on the TV monitor.
- The time code regenerated to the tape time code can be output from the Time Code Output Connector, using the following switches.
  1. Set the Regen/Preset Switch to "REGEN".
  2. Set the ID Preset Switch to "OFF".
     Be sure that the user bits value is output as "0" if the switch is set to ON.

4.INSTALLATION

1. Remove the TCG/TCR Circuit-Board Cover on the sub control panel.
2. Install the TCG/TCR Circuit-Board (AU-F65) in the VTR.

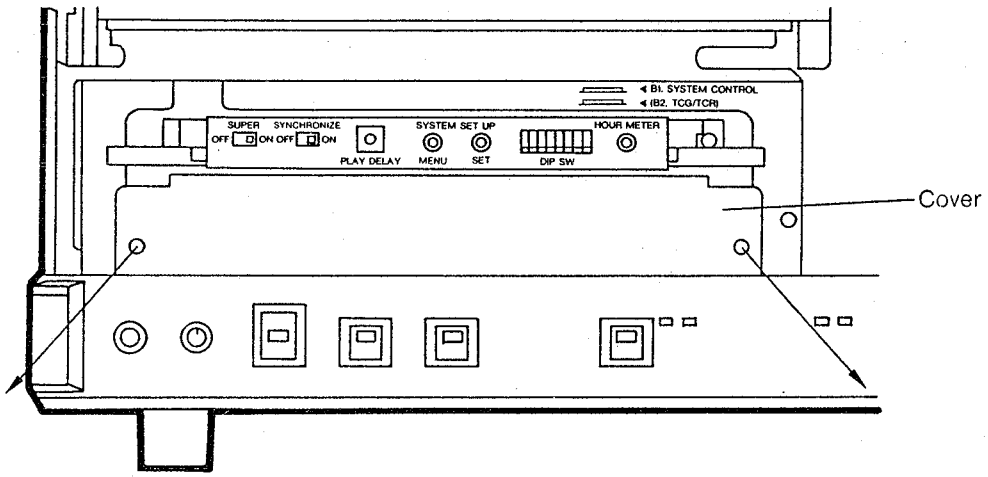

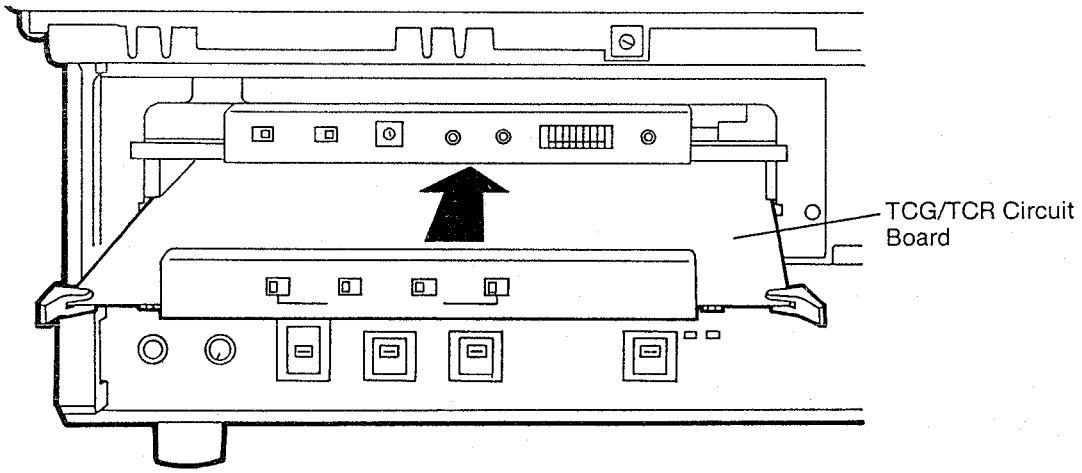

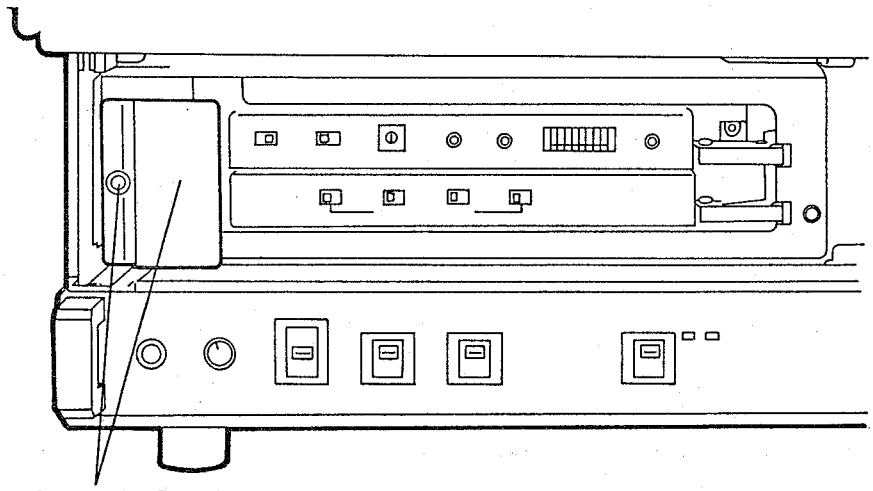

AU-F65 BLOCK DIAGRAM

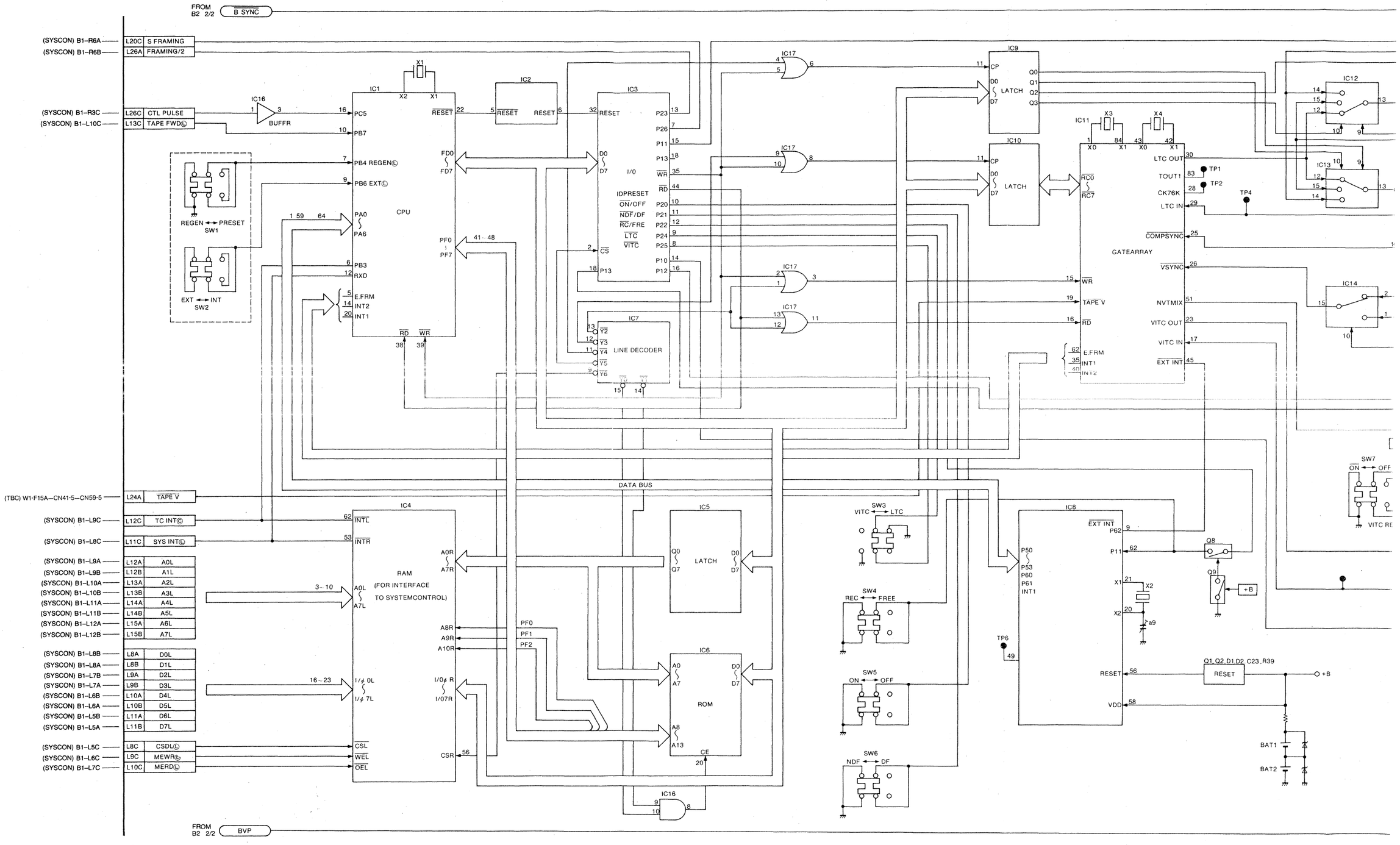

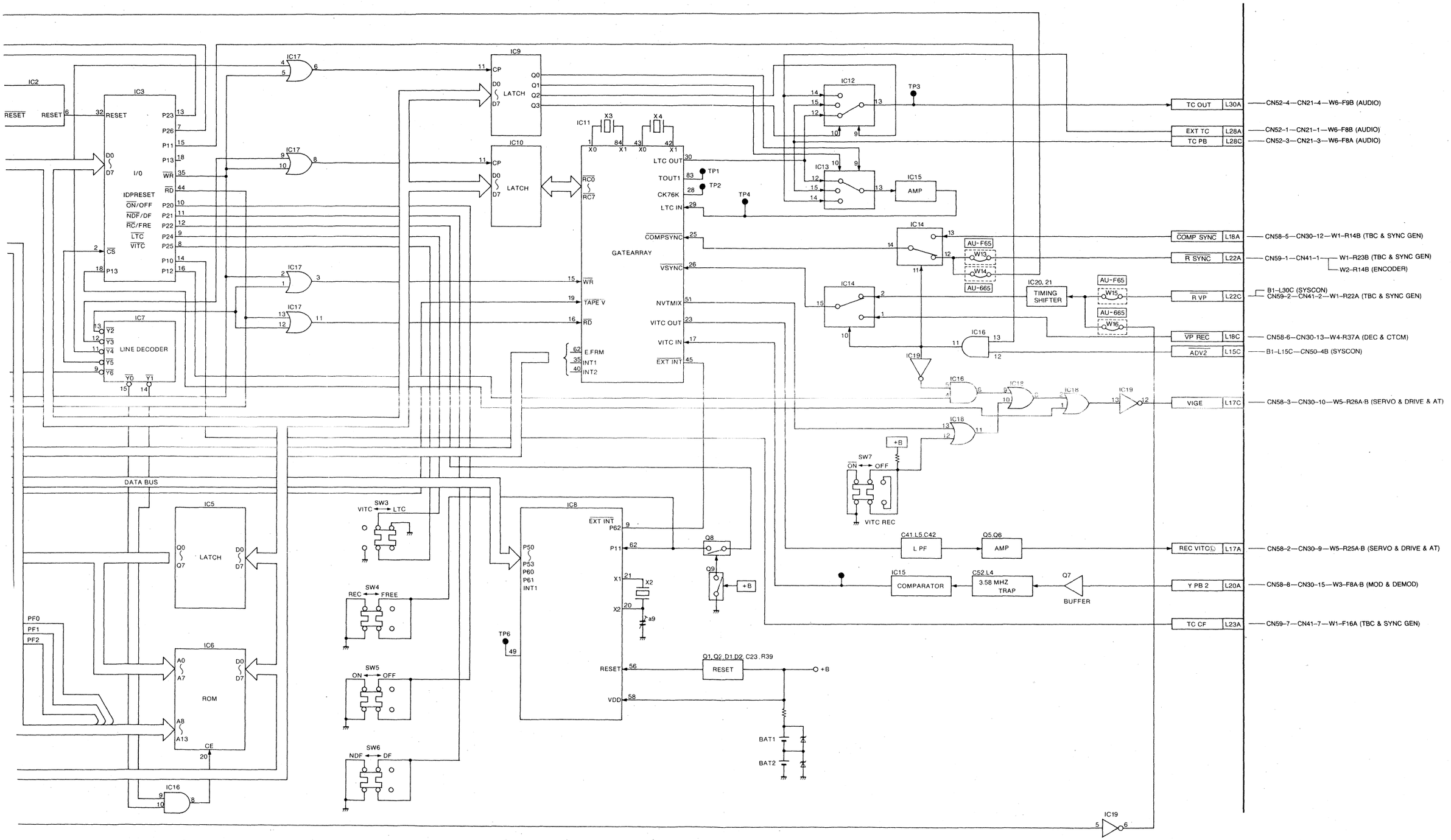
IC2
RESET
RESET
IC3
RESET
I/O
IDPRESET
ON/OFF
NDF/DF
RC/FRE
LTC
VITC
CS
P13
P23
P26
P11
P13
WR
RD
P20
P21
P22
P24
P25
P10
P12
IC17
IC7
LINE DECODER
Y2
Y3
Y4
Y5
Y6
Y0
Y1
IC9
LATCH
IC10
LATCH
IC11
X3
X4
GATEARRAY
RC0
RC7
WR
TAPE V
RD
E.FRM
INT1
INT2
LTC OUT
TOUT1
CK76K
LTC IN
COMPSYNC
VSYNC
NVTMIX
VITC OUT
VITC IN
EXT INT
TP1
TP2
TP4
IC12
IC13
IC15
AMP
IC14
AU-F65
W13
W14
AU-665
IC20, 21
TIMING SHIFTER
AU-F65
W15
AU-665
W16
IC16
IC19
IC16
IC18
IC18
IC19
IC18
+B
SW7
ON
OFF
VITC REC
TP3
TC OUT
L30A
EXT TC
L28A
TC PB
L28C
COMP SYNC
L18A
R SYNC
L22A
R VP
L22C
VP REC
L18C
ADV2
L15C
VIGE
L17C
REC VITC
L17A
Y PB 2
L20A
TC CF
L23A
C41.L5.C42
L PF
Q5.Q6
AMP
IC15
COMPARATOR
C52.L4
3.58 MHZ TRAP
Q7
BUFFER
CN52-4—CN21-4—W6-F9B (AUDIO)
CN52-1—CN21-1—W6-F8B (AUDIO)
CN52-3—CN21-3—W6-F8A (AUDIO)
CN58-5—CN30-12—W1-R14B (TBC & SYNC GEN)
CN59-1—CN41-1—W1-R23B (TBC & SYNC GEN)
W2-R14B (ENCODER)
B1-L30C (SYSCON)
CN59-2—CN41-2—W1-R22A (TBC & SYNC GEN)
CN58-6—CN30-13—W4-R37A (DEC & CTCM)
B1-L15C—CN50-4B (SYSCON)
CN58-3—CN30-10—W5-R26A-B (SERVO & DRIVE & AT)
CN58-2—CN30-9—W5-R25A-B (SERVO & DRIVE & AT)
CN58-8—CN30-15—W3-F8A-B (MOD & DEMOD)
CN59-7—CN41-7—W1-F16A (TBC & SYNC GEN)
DATA BUS
IC5
LATCH
IC6
ROM
PF0
PF1
PF2
CE
IC16
SW3
VITC
LTC
SW4
REC
FREE
SW5
ON
OFF
SW6
NDF
DF
IC8
EXT INT
P50
P53
P60
P61
INT1
P62
P11
X1
X2
TP6
RESET
VDD
Q8
Q9
+B
Q1, Q2, D1, D2, C23, R39
RESET
+B
BAT1
BAT2
IC19

AU-F65 SCHEMATIC DIAGRAM 1/2

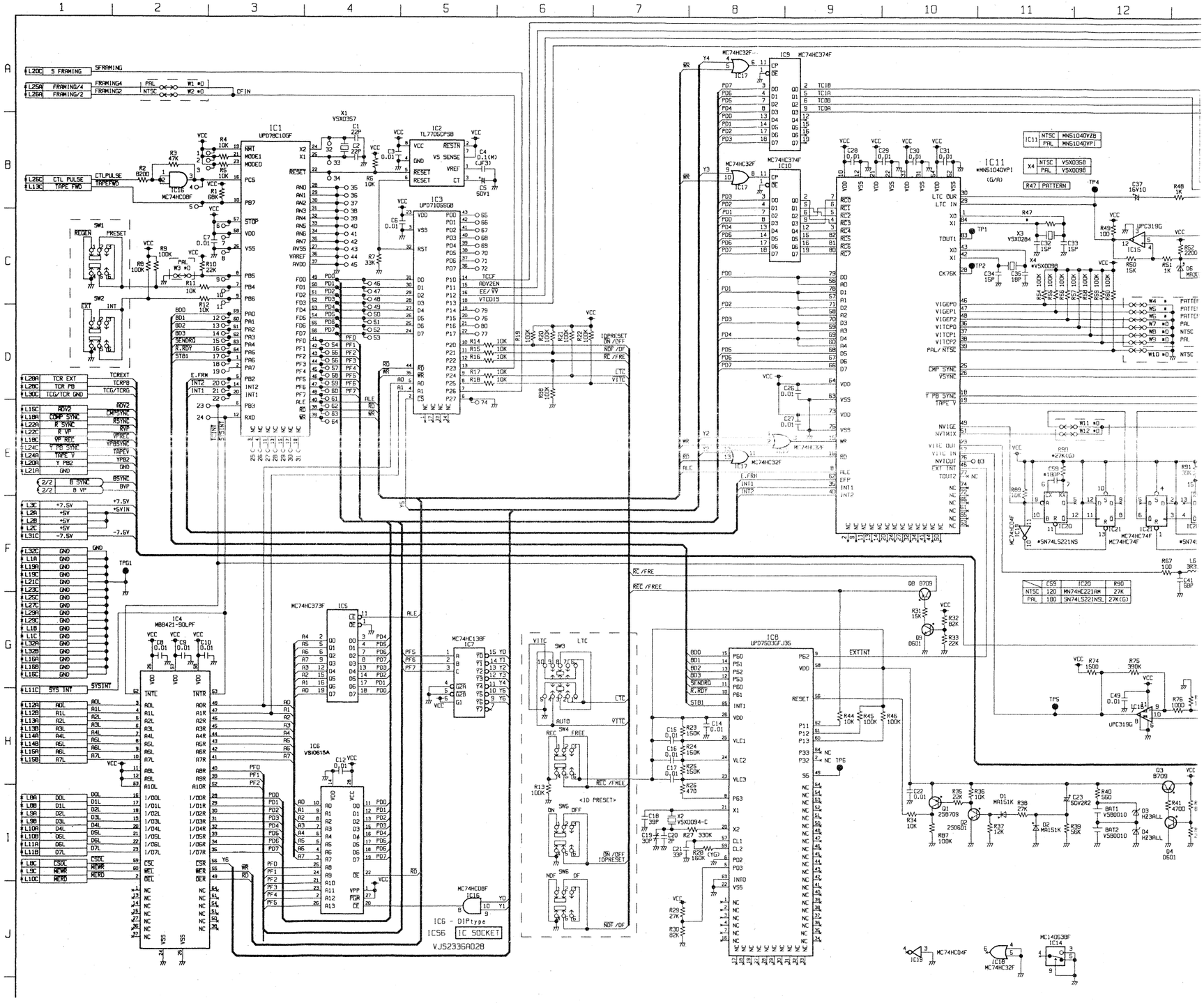
IC1 UPD78C10GF
IC2 TL7705CP58
IC3 UPD7106GS68
IC4 MB8421-90LPF
IC5 MC74HC373F
IC6 VSI0615A
IC7 MC74HC138F
IC8 UPD7503GFJ35
IC9 MC74HC374F
IC10 MC74HC374F
IC11 *MNS1040VP1 (G/A)
IC15 UPC319G
IC16 MC74HCD8F
IC17 MC74HC32F
IC18 MC74HC04F
IC19 MC74HCD4F
IC20 MC74HC221AM
IC21 SN74LS221NS
X1 VSX0357
X2 V5X0094-C
X3 VSX0284
X4 *VSX0098
SW1 REGEN PRESET
SW2 EXT INT
SW3 LTC
SW4 REC FREE
SW5 ON OFF
SW6 NDF DF
TP1 TP2 TP3 TP4 TP5 TP6 TPG1
Q1 2SB709
Q2 2SD601
Q3 B709
Q4 D601
Q8 B709
Q9 D601
D1 MA151K
D2 MA151K
D3 MZ3ALL
D4 MZ3ALL
D6 MA3D
BA11 VSB0010
BA12 VSB0010
L6 3R3
L7 3R3
L8 3R3
L9 3R3
L10 3R3
L11 3R3
L12 3R3
L13 3R3
L14 3R3
L15 3R3
L16 3R3
L17 3R3
L18 3R3
L19 3R3
L20 3R3
L21 3R3
L22 3R3
L23 3R3
L24 3R3
L25 3R3
L26 3R3
L27 3R3
L28 3R3
L29 3R3
L30 3R3
L31 3R3
L32 3R3
L33 3R3
L34 3R3
L35 3R3
L36 3R3
L37 3R3
L38 3R3
L39 3R3
L40 3R3
L41 68P
L42 3R3
L43 3R3
L44 3R3
L45 3R3
L46 3R3
L47 3R3
L48 3R3
L49 3R3
L50 3R3
L51 3R3
L52 3R3
L53 3R3
L54 3R3
L55 3R3
L56 3R3
L57 3R3
L58 3R3
L59 3R3
L60 3R3
L61 3R3

ATIC DIAGRAM 1/2

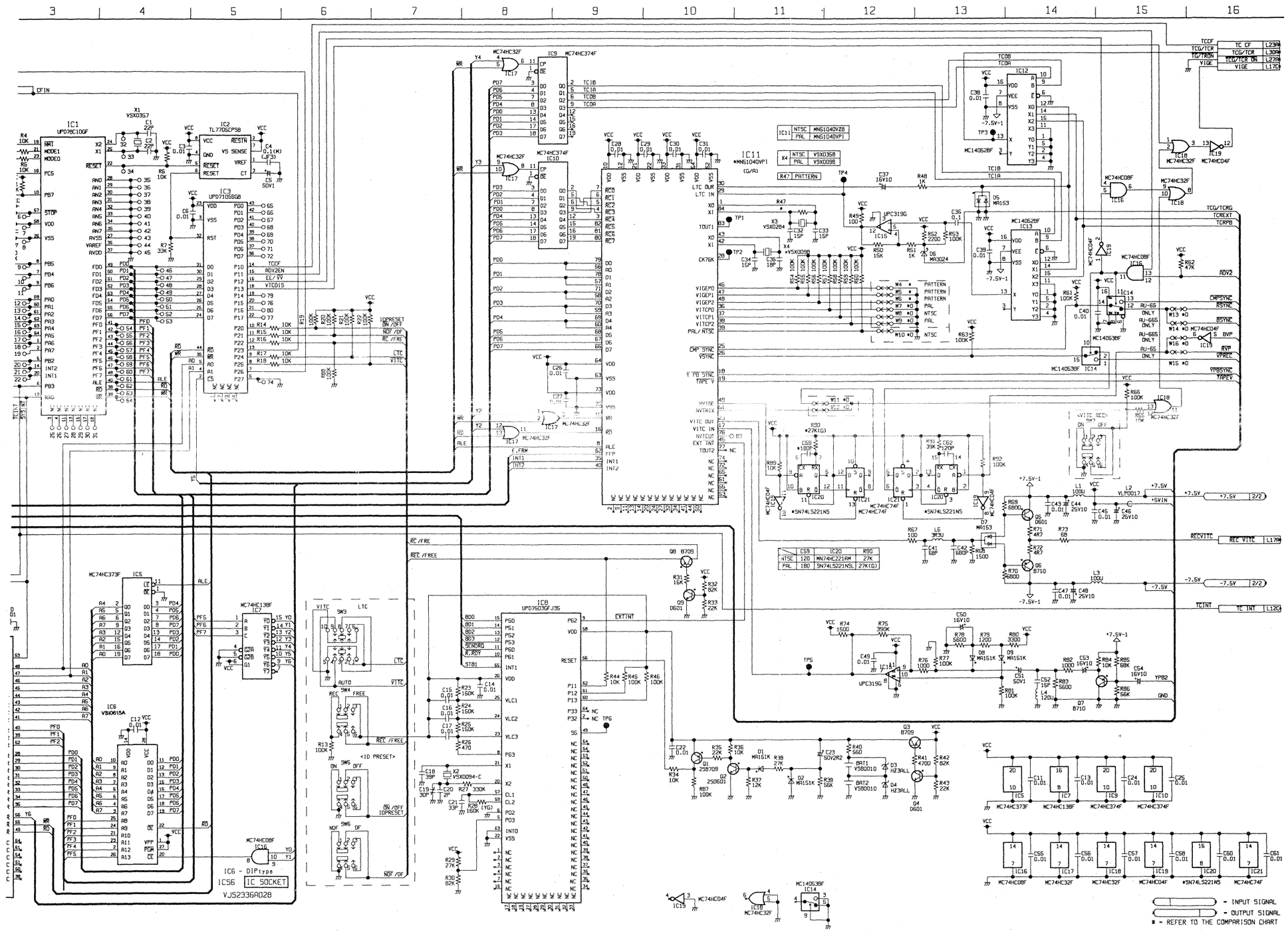

AU-F65 SCHEMATIC DIAGRAM 2/2

1 | 2 | 3 | 4 | 5 | 6 | 7

A

B

C

D

B2L
VJP2868

B2	TCG/TCR (OPTION)											
L (LEFT)	A				B				C			
1	GND				←				←			
2	+5V				←				←			
3	REF VIDEO IN	CN54-10			DUB CF IN	CN54-11			+7.5V			
4	GND	CN54-9,12			GND	CN54-9,12			+14.5V			
5	B5	CN54-13			DUB CF	CN60-13			REF VIDEO	CN60-14		
6	GND				GND				GND	CN60-15		
7	REF SCH	B1-R21B	CN50-10A		REF DET	B1-R21A	CN50-11B		INT	B1-R25A	CN50-5B	
8	D0L	B1-L5A			D1L	B1-L5B			CS DL	B1-L5C		
9	D2L	B1-L6A			D3L	B1-L6B			ME WR	B1-L6C		
10	D4L	B1-L7A			D5L	B1-L7B			ME RD	B1-L7C		
11	D6L	B1-L8A			D7L	B1-L8B			SYS INT	B1-L8C		
12	A0L	B1-L9A			A1L	B1-L9B			TC INT	B1-L9C		
13	A2L	B1-L10S			A3L	B1-L10B			TAPE FWD	B1-L10C		
14	A4L	B1-L11A			A5L	B1-L11B			+11.5V	B1-L11C		
15	A6L	B1-L12A			A7L	B1-L12B			ADV 2	B1-L15A	CN50-4B	
16	GND				GND				GND			
17	REC VITC	CN62-1						*	VIGE	CN62-5		
18	COMP SYNC	CN62-3						*	VP REC	CN62-7		
19	GND	CN62-2,4						*	GND	CN62-6,8		
20	Y PB 2	CN62-9						*	5 FRAMING	B1-R6A	CN50-3DA	
21	GND	CN62-10						*	GND			
22	R SYNC	CN60-1						*	RVP	CN60-3	CN50-30A	
23	TC CF	CN60-9						*	GND			
24	TAPE V	CN60-7						*	Y PB SYNC	CN60-5		
25	FRAMING/4	B1-R6C	CN50-29A					*	GND			
26	FRAMING/2	B1-R6B	CN50-30B					*	CTL PULSE	B1-R3C	CN50-31A	CN53-1B
27	TCG/TCR ON	CN50-32A						*	GND			
28	TCR EXT	CN61-1						*	TCR PB	CN61-3		
29	GND							*	GND			
30	TCG/TCR	CN61-4						*	TCG/TCR GND	CN61-2,5		
31				*				*	-7.5V			
32	GND				←				←			

5 SCHEMATIC DIAGRAM 2/2

2 3 4 5 6 7 8

A B C D

B2L
VJP2868

B2	TCG/TCR (OPTION)											
L (LEFT)	A				B				C			
1	GND				←				←			
2	+5V				←				←			
3	REF VIDEO IN	CN54-10			DUB CF IN	CN54-11			+7.5V			
4	GND	CN54-9,12			GND	CN54-9,12			+14.5V			
5	BS	CN54-13			DUB CF	CN60-13			REF VIDEO	CN60-14		
6	GND				GND				GND	CN60-15		
7	$\overline{\text{REF SCH}}$	B1-R21B	CN50-10A		$\overline{\text{REF DET}}$	B1-R21A	CN50-11B		$\overline{\text{INT}}$	B1-R25A	CN50-5B	
8	D0L	B1-L5A			D1L	B1-L5B			$\overline{\text{CS DL}}$	B1-L5C		
9	D2L	B1-L6A			D3L	B1-L6B			$\overline{\text{ME WR}}$	B1-L6C		
10	D4L	B1-L7A			D5L	B1-L7B			$\overline{\text{ME RD}}$	B1-L7C		
11	D6L	B1-L8A			D7L	B1-L8B			$\overline{\text{SYS INT}}$	B1-L8C		
12	A0L	B1-L9A			A1L	B1-L9B			$\overline{\text{TC INT}}$	B1-L9C		
13	A2L	B1-L10S			A3L	B1-L10B			$\overline{\text{TAPE FWD}}$	B1-L10C		
14	A4L	B1-L11A			A5L	B1-L11B			+11.5V	B1-L11C		
15	A6L	B1-L12A			A7L	B1-L12B			$\overline{\text{ADV 2}}$	B1-L15A	CN50-4B	
16	GND				GND				GND			
17	$\overline{\text{REC VITC}}$	CN62-1					*		VIGE	CN62-5		
18	$\overline{\text{COMP SYNC}}$	CN62-3					*		$\overline{\text{VP REC}}$	CN62-7		
19	GND	CN62-2,4					*		GND	CN62-6,8		
20	Y PB 2	CN62-9					*		S FRAMING	B1-R6A	CN50-30A	
21	GND	CN62-10					*		GND			
22	$\overline{\text{R SYNC}}$	CN60-1					*		$\overline{\text{RVF}}$	CN60-3	CN50-30R	
23	TC CF	CN60-9					*		GND			
24	$\overline{\text{TAPE V}}$	CN60-7					*		Y PB SYNC	CN60-5		
25	FRAMING/4	B1-R6C	CN50-29A				*		GND			
26	FRAMING/2	B1-R6B	CN50-30B				*		CTL PULSE	B1-R3C	CN50-31A	CN53-1B
27	$\overline{\text{TCG/TCR ON}}$	CN50-32A					*		GND			
28	TCR EXT	CN61-1					*		TCR PB	CN61-3		
29	GND						*		GND			
30	TCG/TCR	CN61-4					*		TCG/TCR GND	CN61-2,5		
31				*			*		-7.5V			
32	GND				←				←			

AU-F65 P.C.BOARD (VEP86089A)

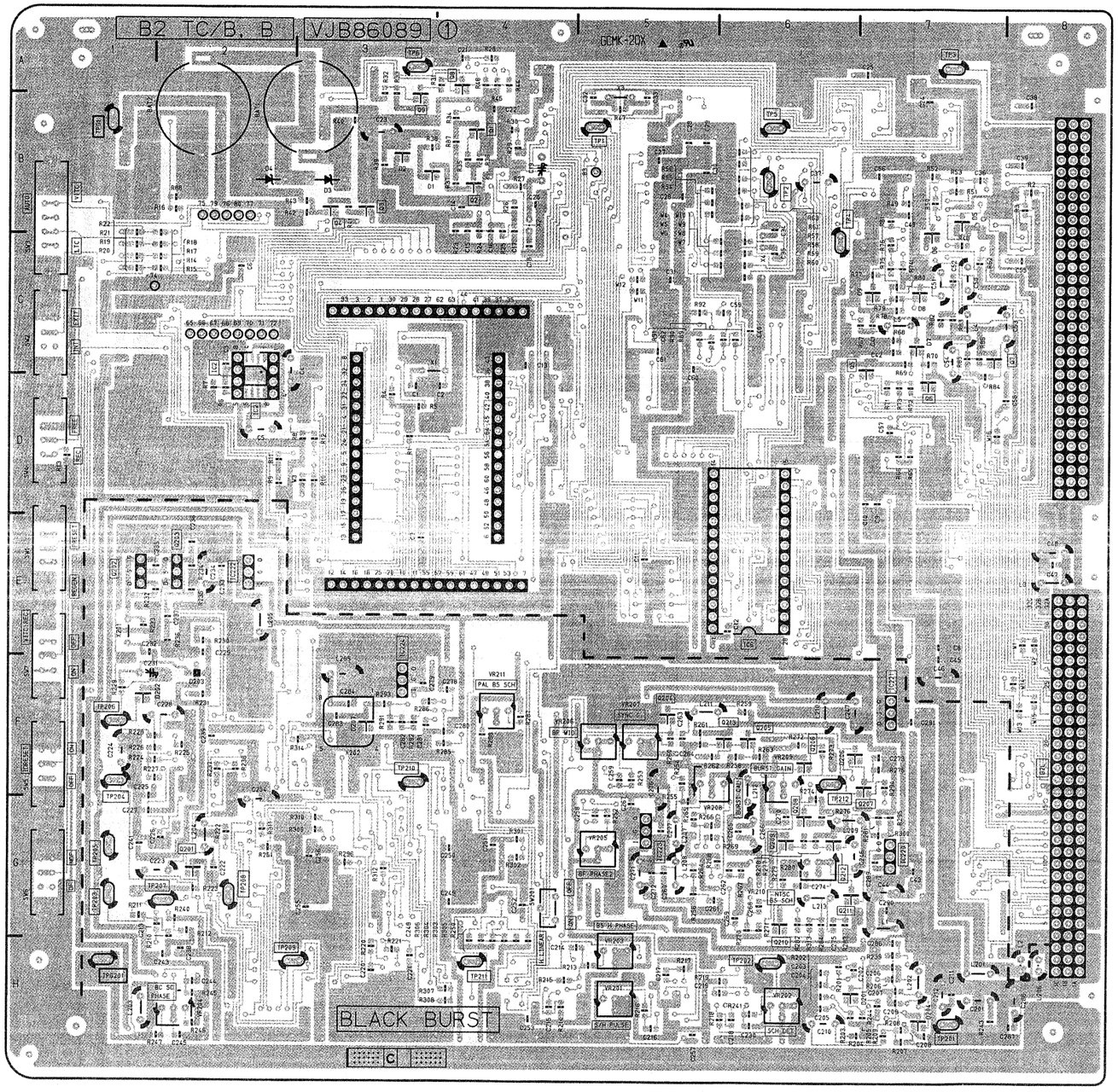

(FOIL SIDE)

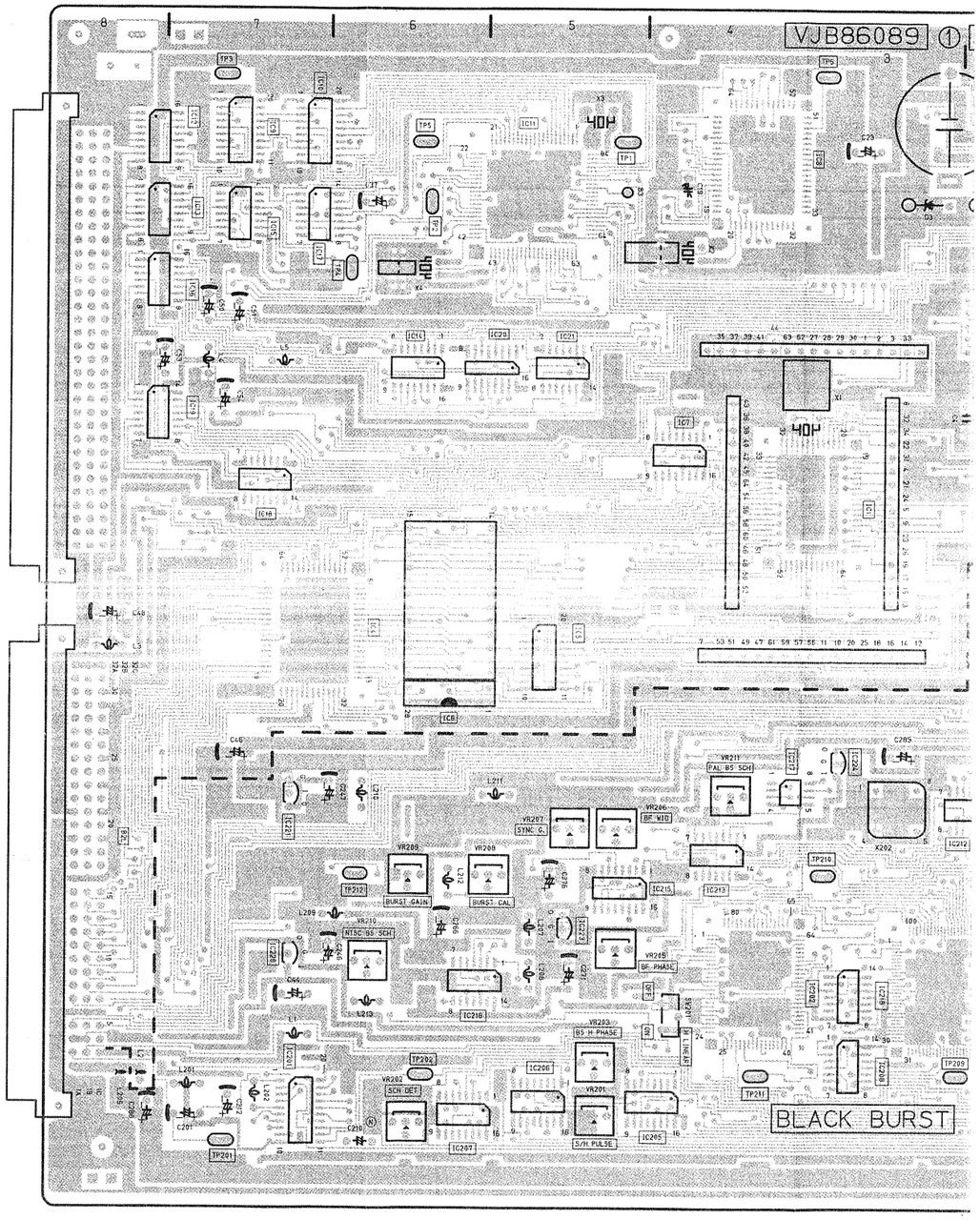

(CO

CHIP PART INFORMATION

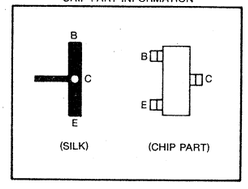

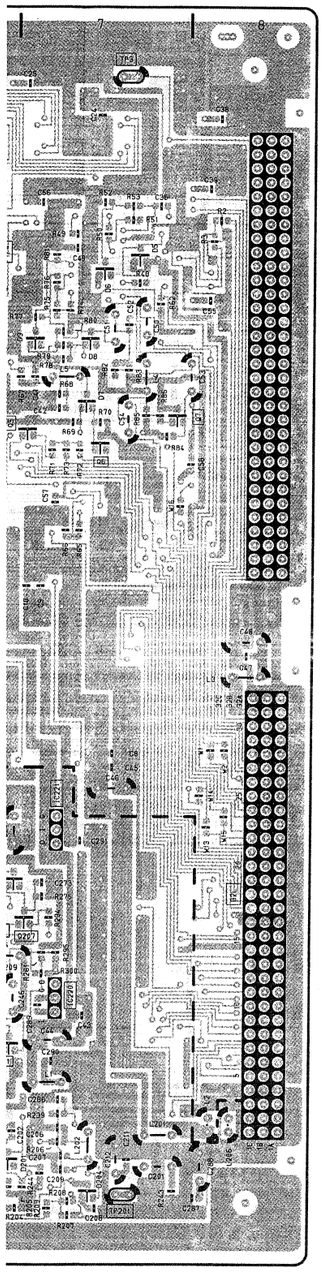

(FOIL SIDE)

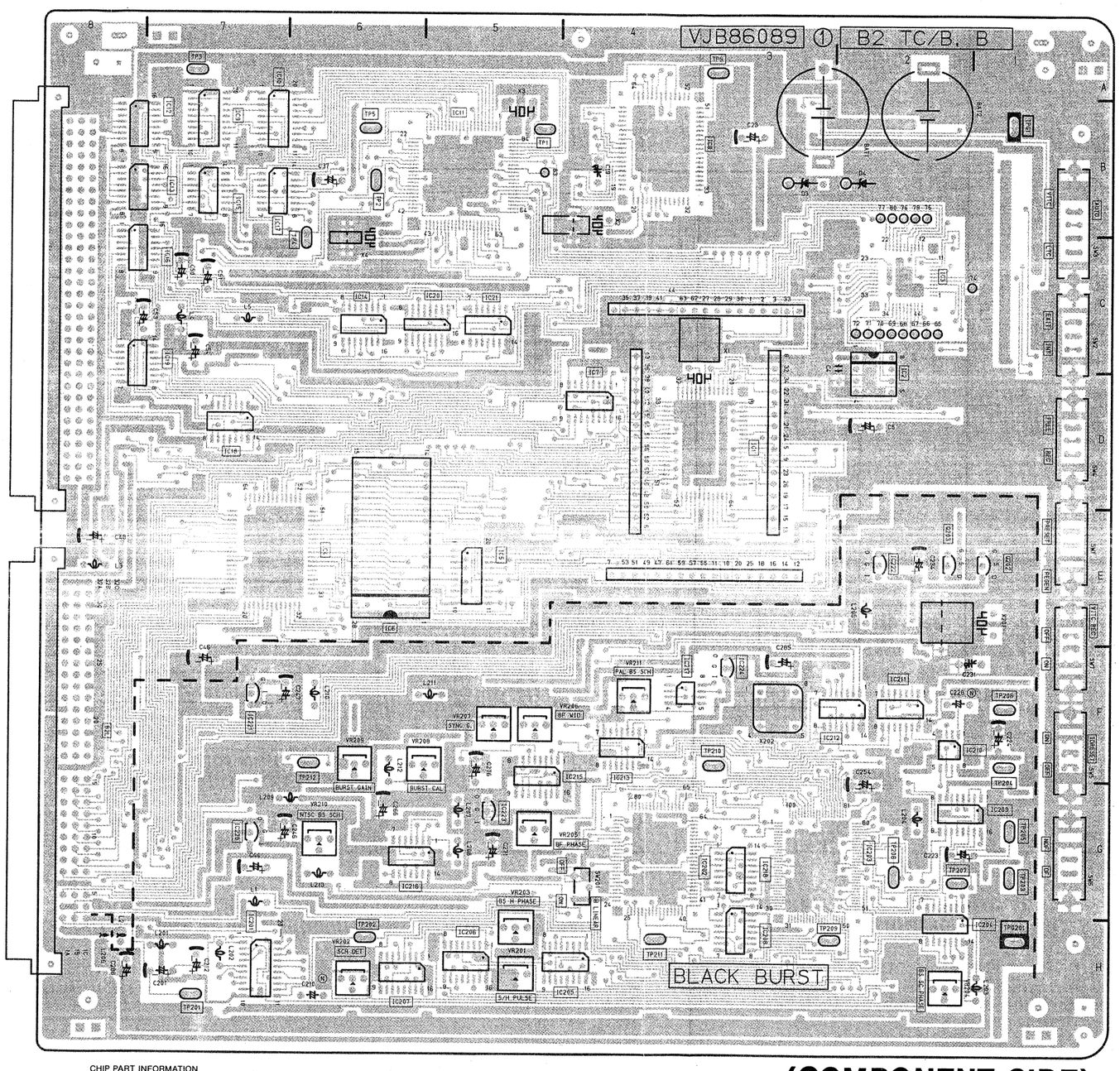

(COMPONENT SIDE)

CHIP PART INFORMATION

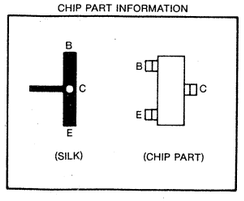

AU-F65 (TIME CODE)

COMPONENT SIDE				FOIL SIDE	
Transistors		TP5	B-6	Transistors	
		TP6	A-3		
Q202	E-1	TP201	H-7	Q1	B-4
Q203	E-2	TP202	H-6	Q2	B-4
Integrated Circuits		TP203	G-1	Q3	B-3
		TP204	F-1	Q4	B-3
		TP205	G-1	Q5	C-6
		TP206	F-1	Q6	D-7
IC1	D-3	TP207	G-2	Q7	C-7
IC2	D-2	TP208	G-2	Q8	A-4
IC3	C-2	TP209	H-3	Q9	B-3
IC4	E-6	TP210	F-3	Q201	G-2
IC5	E-5	TP211	H-4	Q204	F-5
IC6	E-6	TP212	F-6	Q205	F-6
IC7	D-4	TP GND		Q206	F-6
IC8	B-3			Q207	F-7
IC9	B-7	TPG1	B-1	Q208	G-6
IC10	B-7	TPG201	H-1	Q209	G-6
IC11	B-5	Others		Q210	G-6
IC12	B-8			Q211	G-6
IC13	B-8	VR201	H-5	Q212	G-6
IC14	C-6	VR202	H-6	Q213	F-6
IC15	B-7	VR203	H-5		
IC16	C-8	VR204	H-2		
IC17	B-7	VR205	G-5		
IC18	D-7	VR206	F-5		
IC19	C-8	VR207	F-5		
IC20	C-5	VR208	F-5		
IC21	C-5	VR209	F-6		
IC201	H-7	VR210	G-6		
IC202	G-3	VR211	F-4		
IC203	G-2				
IC204	H-2				
IC205	H-4				
IC206	H-5				
IC207	H-6				
IC208	H-3				
IC209	G-2				
IC210	F-2				
IC211	F-2				
IC212	F-2				
IC213	F-4				
IC215	F-5				
IC216	G-6				
IC217	F-4				
IC218	G-3				
IC220	G-7				
IC221	F-7				
IC222	E-2				
IC223	G-5				
IC224	F-3				
Test Points					
TP1	B-5				
TP2	B-6				
TP3	A-7				
TP4	C-6				

ELECTRICAL REPLACEMENT PARTS LIST

Ref.No.	Part No.	Part Name & Description	Pcs	Remarks
BAT1,T2	VSB0010	BATTERY	2	
B2L	VJP2899B096	CONNECTOR(MALE)	1	
		CAPACITORS		
C1,C2	ECUM1H220JCN	C.CAPACITOR CH 50V 22P	2	
C3	ECUM1H103ZFN	C.CAPACITOR CH 50V 0.01U	1	
C4	ECQM1H104JF	P.CAPACITOR 50V 0.1U	1	
C5	ECEA1HU010	E.CAPACITOR 50V 1U	1	
C6-C9	ECUM1H103ZFN	C.CAPACITOR CH 50V 0.01U	4	
C10-17	ECUM1H103ZFN	C.CAPACITOR CH 50V 0.01U	8	
C18	ECUM1H390JCN	C.CAPACITOR CH 50V 39P	1	
C19	ECV12W30X53	V.CAPACITOR 30P	1	
C20	ECUM1H020CCN	C.CAPACITOR CH 50V 2P	1	
C21	ECUM1H330JCN	C.CAPACITOR CH 50V 33P	1	
C22	ECUM1H103ZFN	C.CAPACITOR CH 50V 0.01U	1	
C23	ECEA1HU2R2	E.CAPACITOR 50V 2.2U	1	
C24-31	ECUM1H103ZFN	C.CAPACITOR CH 50V 0.01U	8	
C32-34	ECUM1H150JCN	C.CAPACITOR CH 50V 15P	3	
C35	ECUM1H180JCN	C.CAPACITOR CH 50V 18P	1	
C36	ECUM1E104ZFN	C.CAPACITOR CH 25V 0.1U	1	
C37	ECEA1CU100	E.CAPACITOR 16V 10U	1	
C38-40	ECUM1H103ZFN	C.CAPACITOR CH 50V 0.01U	3	
C41	ECUM1H680JCN	C.CAPACITOR CH 50V 68P	1	
C42	ECUM1H681JCN	C.CAPACITOR CH 50V 680P	1	
C43	ECUM1H103ZFN	C.CAPACITOR CH 50V 0.01U	1	
C44	ECEA1EU100	E.CAPACITOR 25V 10U	1	
C45	ECUM1H103ZFN	C.CAPACITOR CH 50V 0.01U	1	
C46	ECEA1EU100	E.CAPACITOR 25V 10U	1	
C47	ECUM1H103ZFN	C.CAPACITOR CH 50V 0.01U	1	
C48	ECEA1EU100	E.CAPACITOR 25V 10U	1	
C49	ECUM1H103ZFN	C.CAPACITOR CH 50V 0.01U	1	
C50	ECEA1CU100	E.CAPACITOR 16V 10U	1	
C51	ECEA1HU010	E.CAPACITOR 50V 1U	1	
C52	ECUM1H150JCN	C.CAPACITOR CH 50V 15P	1	
C53,54	ECEA1CU100	E.CAPACITOR 16V 10U	2	
C55-58	ECUM1H103ZFN	C.CAPACITOR CH 50V 0.01U	4	
C59	ECUM1H121JCN	C.CAPACITOR CH 50V 120P	1	AU-F65-P
C59	ECUM1H181JCN	C.CAPACITOR CH 50V 180P	1	AU-F65-E
C60,61	ECUM1H103ZFN	C.CAPACITOR CH 50V 0.01U	2	
C62	ECUM1H121JCN	C.CAPACITOR CH 50V 120P	1	
D1,D2	MA151K	DIODE	2	
D3,D4	HZ3ALL	DIODE	2	
D5	MA153	DIODE	1	
D6	MA3024	DIODE	1	
D7	MA153	DIODE	1	
D8,D9	MA151K	DIODE	2	
IC1	UPD78C10CW	IC	1	
IC2	TL7705CPSB	IC	1	
IC3	UPD71055GB	IC	1	
IC4	MB8421-90LPF	IC	1	
IC5	MC74HC373F	IC	1	
IC6	VSI0615A	IC	1	AU-F65-P
IC6	VSI0751	IC	1	AU-F65-E
IC7	MC74HC138AF	IC	1	
IC8	UPD7503GFJ35	IC	1	
IC9	MC74HC374F	IC	1	
IC10	MC74HC374F	IC	1	

Ref.No.	Part No.	Part Name & Description	Pcs	Remarks
IC11	MN51040VZB	IC	1	AU-F65-P
IC11	MN51040VPI	IC	1	AU-F65-E
IC12,13	MC14052BF	IC	2	
IC14	MC14053BF	IC	1	(R)
IC15	UPC319G2	IC	1	
IC16	MC74HC08AF	IC	1	
IC17,18	MC74HC32AF	IC	2	
IC19	MC74HC04AF	IC	1	
IC20	MM74HC221AM	IC	1	AU-F65-P
IC20	SN74LS221NS	IC	1	AU-F65-E
IC21	MC74HC74AF	IC	1	
IC6S	VJS2336A028	CONNECTOR (FEMALE)	1	
L1	VLQEL05S101J	COIL 100UH	1	
L2	VLP0017	COIL	1	
L3	VLQEL05S101J	COIL 100UH	1	
L4	VLQEL05S121J	COIL 120UH	1	
L5	VLQEL05S3R3J	COIL 3.3UH	1	
Q1	2SB709	TRANSISTOR CHIP	1	(Q,R)
Q2	2SD601	TRANSISTOR CHIP	1	(Q,R)
Q3	2SB709	TRANSISTOR CHIP	1	(Q,R)
Q4,Q5	2SD601	TRANSISTOR CHIP	2	(Q,R)
Q6,Q7	2SB710	TRANSISTOR	2	(Q,R)
Q8	2SB709	TRANSISTOR CHIP	1	(Q,R)
Q9	2SD601	TRANSISTOR CHIP	1	(Q,R)
		RESISTORS		
R1	ERJ6GEYJ683	M.RESISTOR CH 1/10W 68K	1	
R2	ERJ6GEYJ822	M.RESISTOR CH 1/10W 8.2K	1	
R3	ERJ6GEYJ473	M.RESISTOR CH 1/10W 47K	1	
R4-R6	ERJ6GEYJ103	M.RESISTOR CH 1/10W 10K	3	
R7	ERJ6GEYJ333	M.RESISTOR CH 1/10W 33K	1	
R8,R9	ERJ6GEYJ104	M.RESISTOR CH 1/10W 100K	2	
R10	ERJ6GEYJ223	M.RESISTOR CH 1/10W 22K	1	
R11,12	ERJ6GEYJ103	M.RESISTOR CH 1/10W 10K	2	
R13	ERJ6GEYJ104	M.RESISTOR CH 1/10W 100K	1	
R14-18	ERJ6GEYJ103	M.RESISTOR CH 1/10W 10K	5	
R19-22	ERJ6GEYJ104	M.RESISTOR CH 1/10W 100K	4	
R23-25	ERJ6GEYJ154	M.RESISTOR CH 1/10W 150K	3	
R26	ERJ6GEYJ471	M.RESISTOR CH 1/10W 470	1	
R27	ERJ6GEYJ334	M.RESISTOR CH 1/10W 330K	1	
R28	ERJ6GEYG164	M.RESISTOR CH 1/10W 160K	1	
R29	ERJ6GEYJ273	M.RESISTOR CH 1/10W 27K	1	
R30	ERJ6GEYJ823	M.RESISTOR CH 1/10W 82K	1	
R31	ERJ6GEYJ153	M.RESISTOR CH 1/10W 15K	1	
R32	ERJ6GEYJ823	M.RESISTOR CH 1/10W 82K	1	
R33	ERJ6GEYJ223	M.RESISTOR CH 1/10W 22K	1	
R34	ERJ6GEYJ103	M.RESISTOR CH 1/10W 10K	1	
R35	ERJ6GEYJ223	M.RESISTOR CH 1/10W 22K	1	
R36	ERJ6GEYJ103	M.RESISTOR CH 1/10W 10K	1	
R37	ERJ6GEYJ123	M.RESISTOR CH 1/10W 12K	1	
R38	ERJ6GEYJ273	M.RESISTOR CH 1/10W 27K	1	
R39	ERJ6GEYJ563	M.RESISTOR CH 1/10W 56K	1	
R40	ERJ6GEYJ561	M.RESISTOR CH 1/10W 560	1	
R41	ERJ6GEYJ472	M.RESISTOR CH 1/10W 4.7K	1	
R42	ERJ6GEYJ823	M.RESISTOR CH 1/10W 82K	1	
R43	ERJ6GEYJ223	M.RESISTOR CH 1/10W 22K	1	
R44	ERJ6GEYJ103	M.RESISTOR CH 1/10W 10K	1	
R45,46	ERJ6GEYJ104	M.RESISTOR CH 1/10W 100K	2	
R48	ERJ6GEYJ102	M.RESISTOR CH 1/10W 1K	1	
R49	ERJ6GEYJ101	M.RESISTOR CH 1/10W 100	1	
R50	ERJ6GEYJ153	M.RESISTOR CH 1/10W 15K	1	
R51	ERJ6GEYJ102	M.RESISTOR CH 1/10W 1K	1	
R52	ERJ6GEYJ222	M.RESISTOR CH 1/10W 2.2K	1	
R53-61	ERJ6GEYJ104	M.RESISTOR CH 1/10W 100K	9	
R62	ERJ6GEYJ473	M.RESISTOR CH 1/10W 47K	1	
R63	ERJ6GEYJ104	M.RESISTOR CH 1/10W 100K	1	
R65	ERJ6GEYJ103	M.RESISTOR CH 1/10W 10K	1	

Ref.No.	Part No.	Part Name & Description	Pcs	Remarks
R66	ERJ6GEYJ104	M.RESISTOR CH 1/10W 100K	1	
R67	ERJ6GEYJ101	M.RESISTOR CH 1/10W 100	1	
R68	ERJ6GEYJ152	M.RESISTOR CH 1/10W 1.5K	1	
R69,70	ERJ6GEYJ682	M.RESISTOR CH 1/10W 6.8K	2	
R71,72	ERJ6GEYJ4R7	M.RESISTOR CH 1/10W 4.7	2	
R73	ERJ6GEYJ680	M.RESISTOR CH 1/10W 68	1	
R74	ERJ6GEYJ152	M.RESISTOR CH 1/10W 1.5K	1	
R75	ERJ6GEYJ394	M.RESISTOR CH 1/10W 390K	1	
R76	ERJ6GEYJ102	M.RESISTOR CH 1/10W 1K	1	
R77	ERJ6GEYJ104	M.RESISTOR CH 1/10W 100K	1	
R78	ERJ6GEYJ562	M.RESISTOR CH 1/10W 5.6K	1	
R79	ERJ6GEYJ122	M.RESISTOR CH 1/10W 1.2K	1	
R80	ERJ6GEYJ332	M.RESISTOR CH 1/10W 3.3K	1	
R81	ERJ6GEYJ104	M.RESISTOR CH 1/10W 100K	1	
R82	ERJ6GEYJ102	M.RESISTOR CH 1/10W 1K	1	
R83	ERJ6GEYJ562	M.RESISTOR CH 1/10W 5.6K	1	
R84	ERJ6GEYJ103	M.RESISTOR CH 1/10W 10K	1	
R85	ERJ6GEYJ683	M.RESISTOR CH 1/10W 68K	1	
R86	ERJ6GEYJ563	M.RESISTOR CH 1/10W 56K	1	
R87,88	ERJ6GEYJ104	M.RESISTOR CH 1/10W 100K	2	
R89	ERJ6GEYJ103	M.RESISTOR CH 1/10W 10K	1	
R90	ERJ6GEYJ273	M.RESISTOR CH 1/10W 27K	1	AU-F65-P
R90	ERJ6GEYG273	M.RESISTOR CH 1/10W 27K	1	AU-F65-E
R91	ERJ6GEYJ393	M.RESISTOR CH 1/10W 39K	1	
R92	ERJ6GEYJ104	M.RESISTOR CH 1/10W 100K	1	
SW1	VSS0223	SWITCH	1	
SW4,W5	VSS0223	SWITCH	2	
SW7	VSS0223	SWITCH	1	
TP1-P6	VJR0646	TEST POINT	6	
TPG1	VJR0646	TEST POINT	1	
X1	VSX0357	CRYSTAL OSCILLATOR	1	
X2	VSX0094	CRYSTAL OSCILLATOR	1	
X3	VSX0284	CRYSTAL OSCILLATOR	1	
X4	VSX0358	CRYSTAL OSCILLATOR	1	AU-F65-P
X4	VSX0098	CRYSTAL OSCILLATOR	1	AU-F65-E
		MISCELLANEOUS		
	VML2143	CARD PULLER	1	
	VML2144	CARD PULLER	1	
	VMS4174	PIN	4	
	VMZ1548	BARRIER	1	
	VSC3057	SHIELD CASE	1	
	VXA3967	P.C.B. SHIELD PLATE	1	
	XNG26E	NUT	2	
	XNG3ES	NUT	2	
	XSN3+6S	SCREW	2	
	XYNV3+K6FR	SCREW	4	
	XYN26+C10	SCREW	2	

7-8

MECHANICAL REPLACEMENT PARTS LIST

PACKING

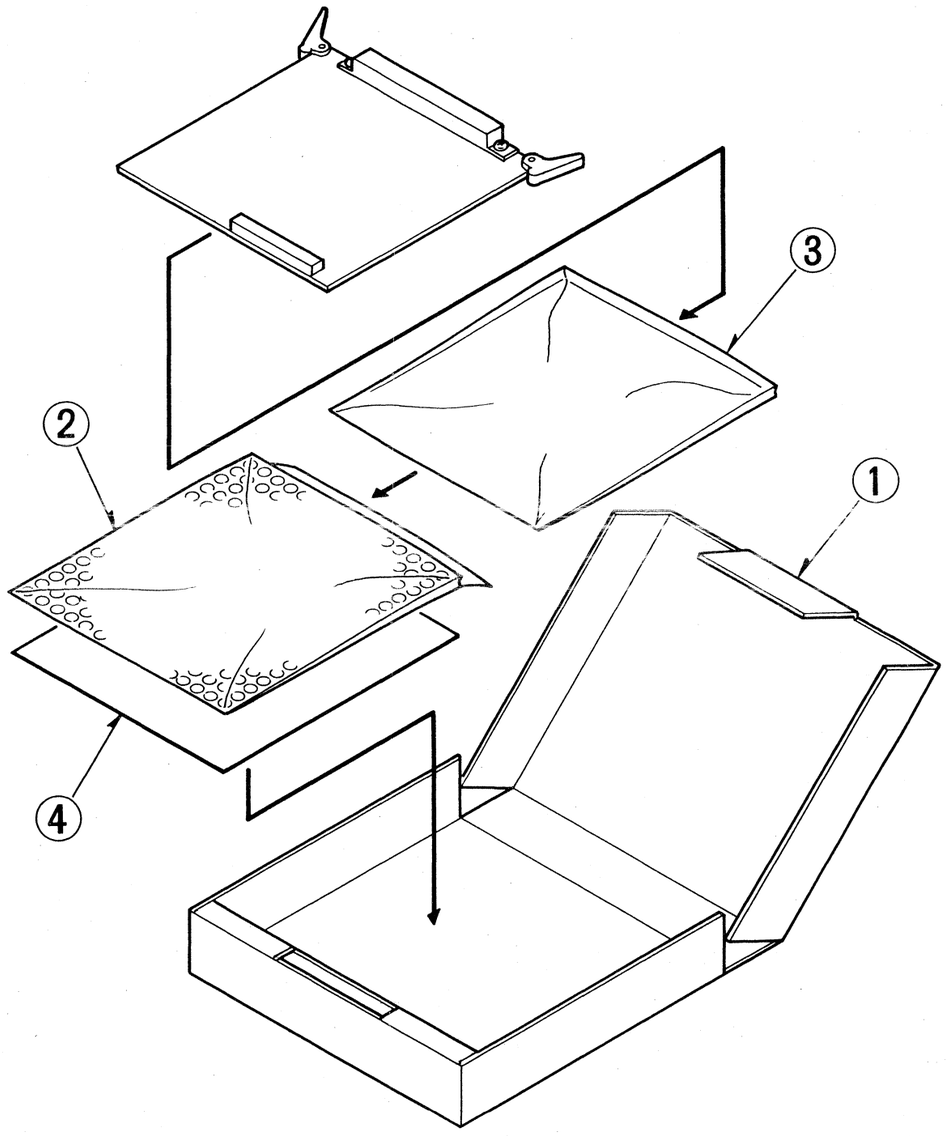

PACKING

Ref.No.		Part No.	Part Name & Description	Pcs	Remarks
1		VPG5338	PACKING CASE	1	
2		VQT3653	OPERATING INSTRUCTIONS	1	AU-P65-P
2		VQT3654	OPERATING INSTRUCTIONS	1	AU-P65-E
			(GERMAN, ENGLISH)		
3		VPFO385	ELECTRIFICATION PROTECTOR	1	
			BAG		
4		VPFO535	AIR CAP BAG	1	

50Pin Parallel Remote Connector

AU-MK25

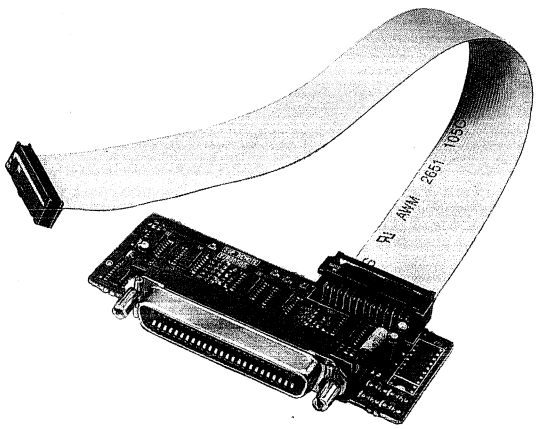

INTRODUCTION

AU-MK25 is a 50 Pin Parallel Remote Connector for use with the AU-65, AU-63 or the AU-62. When AU-MK25 is attached with the AU-65, AU-63 or the AU-62, it makes possible to control them by 50 pin cable.
This Section contains technical information covering the following points, schematic diagrams, P.C.Board diagrams, and parts list of AU-MK25.

How to attach the Parallel Remote Connector AU-MK25 to AU-65

Fig. 1

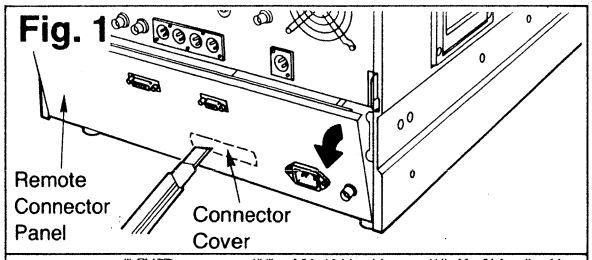

Fig. 2

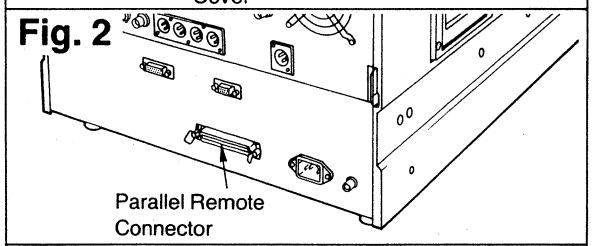

Fig. 3

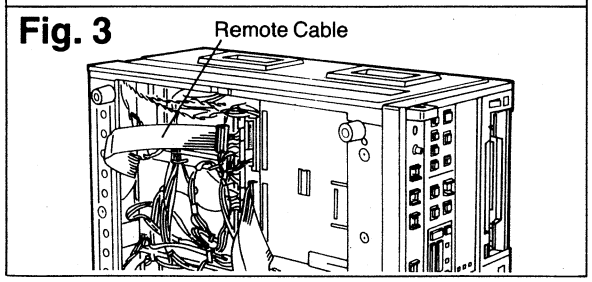

1. Remove the remote connector panel and connector cover of the AU-65 (Fig. 1).
2. Attach the parallel remote connector using the screwdriver (Fig. 2).
3. Remove the bottom panel and connect the remote cable (supplied) as shown (Fig. 3).
4. Attach the bottom and the remote connector panels.

AU-MK25 SCHEMATIC DIAGRAM (OPTION FOR AU-65/63/62)

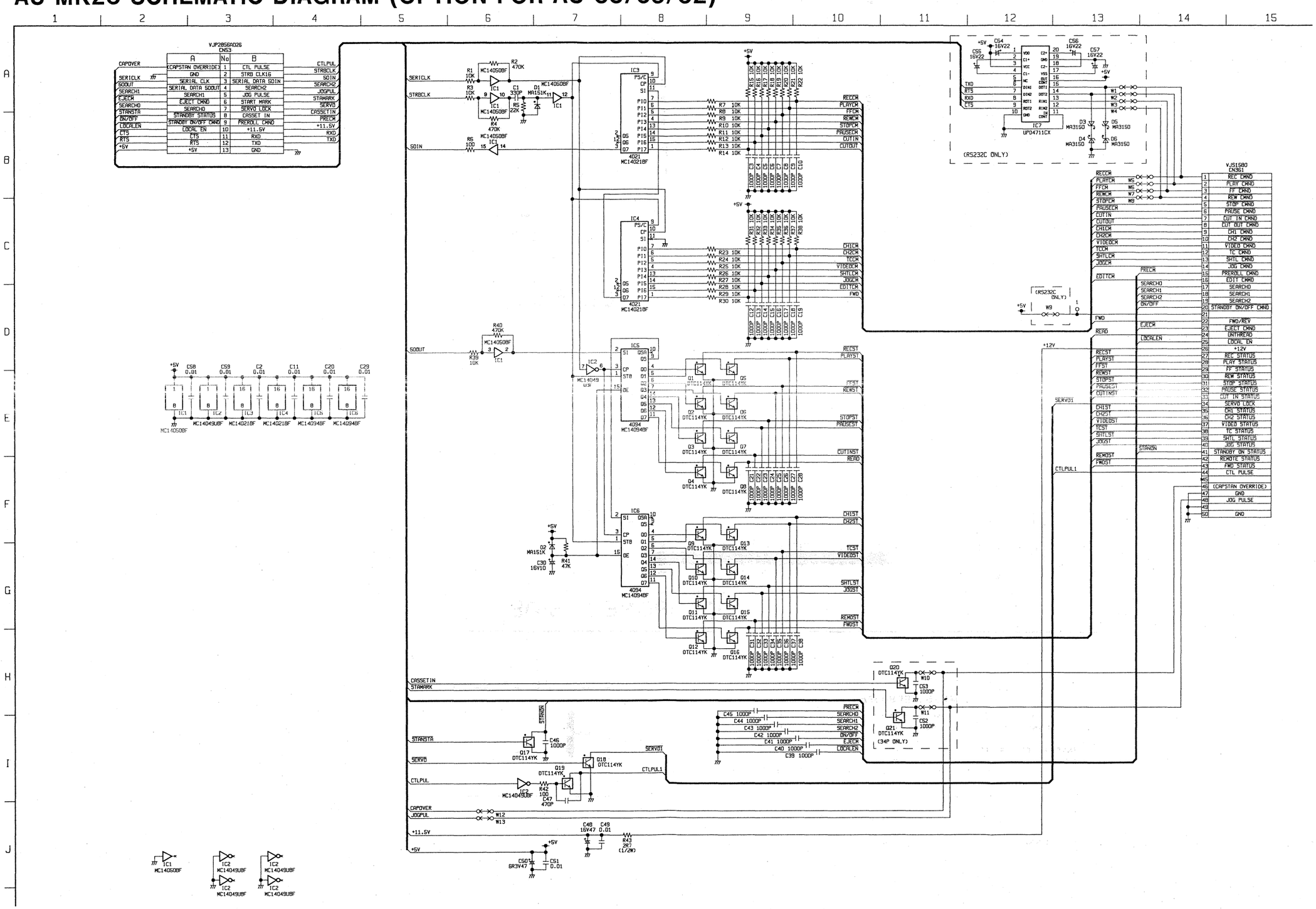

8-2

AU-MK25 P.C.BOARD (VEP80574A)

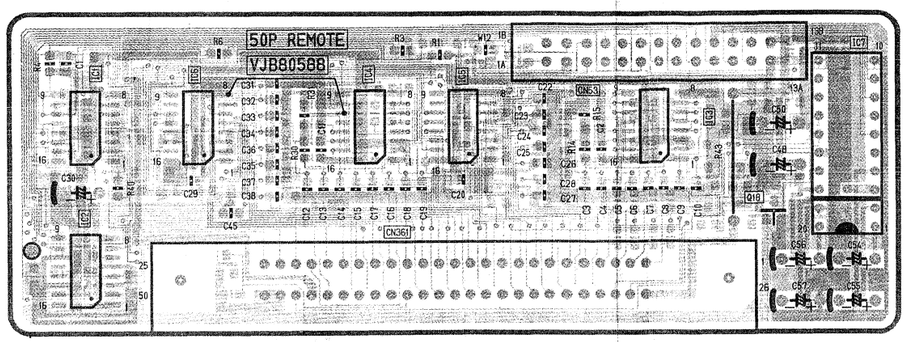

(FOIL SIDE)

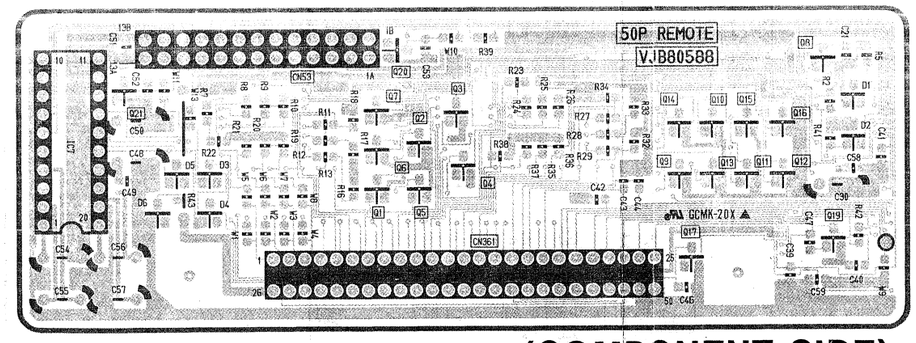

(COMPONENT SIDE)

E D C B A

1 2 3 4 5

AU-MK25 (VEP80588A)					
FOIL SIDE		COMPONENT SIDE		Q14	B-4
TRANSISTOR		TRANSISTOR		Q15	B-5
Q18	D-5	Q1	B-3	Q16	B-5
INTEGRATED CIRCUIT		Q2	B-3	Q17	A-4
IC1	D-1	Q3	B-3	Q19	A-5
IC2	D-1	Q4	B-3	Q20	B-3
IC3	D-4	Q5	B-3	Q21	B-1
IC4	D-3	Q6	B-3		
IC5	D-3	Q7	B-3		
IC6	D-2	Q8	B-5		
IC7	D-5	Q9	B-4		
CONNECTOR		Q10	B-4		
CN53	E-4	Q11	B-5		
CN361	D-3	Q12	B-5		
		Q13	B-4		

ADDRESS INFORMATION

CHIP PART INFORMATION

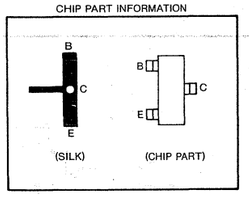

8-3

ELECTRICAL REPLACEMENT PARTS LIST

Ref.No.		Part No.	Part Name & Description	Pcs	Remarks
			CAPACITORS		
C1		ECUM1H331JCN	C.CAPACITOR CH 50V 330P	1	
C2		ECUM1H103ZFN	C.CAPACITOR CH 50V 0.01U	1	
C3-C9		ECUM1H102KBN	C.CAPACITOR CH 50V 1000P	7	
C10		ECUM1H102KBN	C.CAPACITOR CH 50V 1000P	1	
C11		ECUM1H103ZFN	C.CAPACITOR CH 50V 0.01U	1	
C12-19		ECUM1H102KBN	C.CAPACITOR CH 50V 1000P	8	
C20		ECUM1H103ZFN	C.CAPACITOR CH 50V 0.01U	1	
C21-28		ECUM1H102KBN	C.CAPACITOR CH 50V 1000P	8	
C29		ECUM1H103ZFN	C.CAPACITOR CH 50V 0.01U	1	
C30		ECEA1CU100	E.CAPACITOR 16V 10U	1	
C31-46		ECUM1H102KBN	C.CAPACITOR CH 50V 1000P	16	
C47		ECUM1H471JCN	C.CAPACITOR CH 50V 470P	1	
C48		ECEA1CU470	E.CAPACITOR 16V 47U	1	
C49		ECUM1H103ZFN	C.CAPACITOR CH 50V 0.01U	1	
C50		ECEA0JU470	E.CAPACITOR 6.3V 47U	1	
C51		ECUM1H103ZFN	C.CAPACITOR CH 50V 0.01U	1	
C58,59		ECUM1H103ZFN	C.CAPACITOR CH 50V 0.01U	2	
CN53		VJP2856B026	CONNECTOR (MALE)	1	
CN361		VJS1580	CONNECTOR (FEMALE)	1	
D1,D2		MA151K	DIODE	2	
IC1		MC14050BF	IC	1	
IC2		MC14049UBF	IC	1	
IC3,C4		MC14021BF	IC	2	
IC5,C6		MC14094BF	IC	2	
Q1-Q9		DTC114YK	TRANSISTOR-RESISTOR	9	
Q10-19		DTC114YK	TRANSISTOR-RESISTOR	10	
			RESISTORS		
R1		ERJ6GEYJ103	M.RESISTOR CH 1/10W 10K	1	
R2		ERJ6GEYJ474	M.RESISTOR CH 1/10W 470K	1	
R3		ERJ6GEYJ103	M.RESISTOR CH 1/10W 10K	1	
R4		ERJ6GEYJ474	M.RESISTOR CH 1/10W 470K	1	
R5		ERJ6GEYJ223	M.RESISTOR CH 1/10W 22K	1	
R6		ERJ6GEYJ101	M.RESISTOR CH 1/10W 100	1	
R7-R9		ERJ6GEYJ103	M.RESISTOR CH 1/10W 10K	3	
R10-39		ERJ6GEYJ103	M.RESISTOR CH 1/10W 10K	30	
R40		ERJ6GEYJ474	M.RESISTOR CH 1/10W 470K	1	
R41		ERJ6GEYJ473	M.RESISTOR CH 1/10W 47K	1	
R42		ERJ6GEYJ101	M.RESISTOR CH 1/10W 100	1	
R43		ERQ12HJ2R7	F.RESISTOR 1/2W 2.7	1	
			MISCELLANEOUS		
		VMA6578	CONNECTOR5 ANGLE	2	
		XYN3+C10	SCREW	2	

MECHANICAL REPLACEMENT PARTS LIST

PACKING

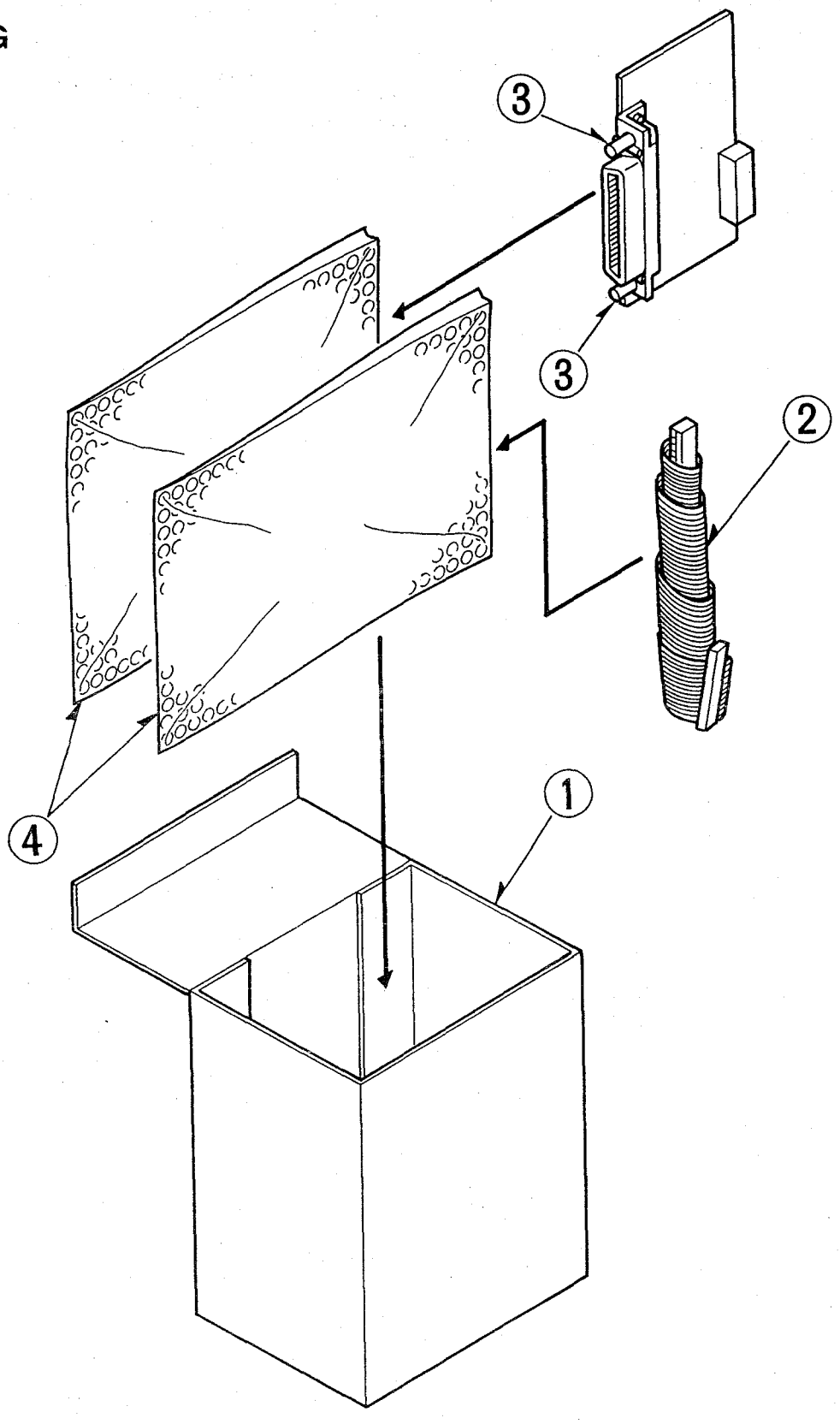

PACKING

Ref.No.		Part No.	Part Name & Description	Pcs	Remarks
1		VPG5340	PACKING CASE	1	
2		VEC0629	JACK CABLE	1	
3		VHD0178	50P CONNECTOR BOSS	2	
4		VPF0536	AIR CAP BAG	2	

Order No. VSD9503S599

Technical Bulletin

Supplement to the Service Manual

MII Video Product

Subject: Introduction of New DEC & CTCM (W4) P.C.Board

Please use this supplement together with the Service Manual(s) and model(s) (■) as follows:

	Model No.	Bulletin	Order No.	Effective from		Model No.	Bulletin	Order No.	Effective from
□	AU-65E		VQS0264		□	AU-665E		VQS0270	
□	AU-63E		VQS0264		□	AU-55HE		VSD9304M503	
□	AU-62E		VQS0264		□	AU-45HE		VSD9304M504	
■	AU-65HE	91	VSD9204M501	K4TNA - - -	■	AU-W35HE	24	VSD9406M506A/B	J4TNA - - -
□	AU-63HE		VSD9204M501		□	AU-W33HE		VSD9406M506A/B	
□	AU-62HE		VSD9204M501		□	AU-W32HE		VSD9406M506A/B	
■	AU-66HE	67	VSD9208M502	K4TNA - - -	□	COMMON		----------	

Board : DEC & CTCM (W4 : VEP83199B)

To improve manufacturing productivity, a new DEC & CTCM (W4) P.C.Board has been introduced.

The following items are included in this Service Manual Supplement.

1) Electrical Adjustment Procedures.
2) Block Diagrams.
3) Schematic Diagrams.
4) Circuit Board Diagrams.
5) Electrical Replacement Parts List.

Interchangeability Code (I/C)

A	Original or new parts may be used in early or late production set. Use original parts until exhausted, then stock new parts.	B	Original parts may be used in early production sets only. New parts may be used in early or late production sets. Use original parts possible then stock new parts.
C	New parts only may be used in early or late production sets.	D	Original parts may be used in early production sets only. New parts may be used in late production sets only. Stock both original and new parts.
E	Other		

Part Number

Ref. No.	Original Part No.	New Part No.	Part Name & Descriptions	Pcs	I/C	Remarks
	VEP83173A	VEP83199B	W4 DEC & CTCM	1	A	AU-66H / 65H
	VEP83173C	VEP83199B	W4 DEC & CTCM	1	A	AU-W35H

Panasonic

Printed in Japan

6. DEC & CTCM (W4) BOARD (1/2)

DEC & CTCM (1/2) SECTION FLOWCHART

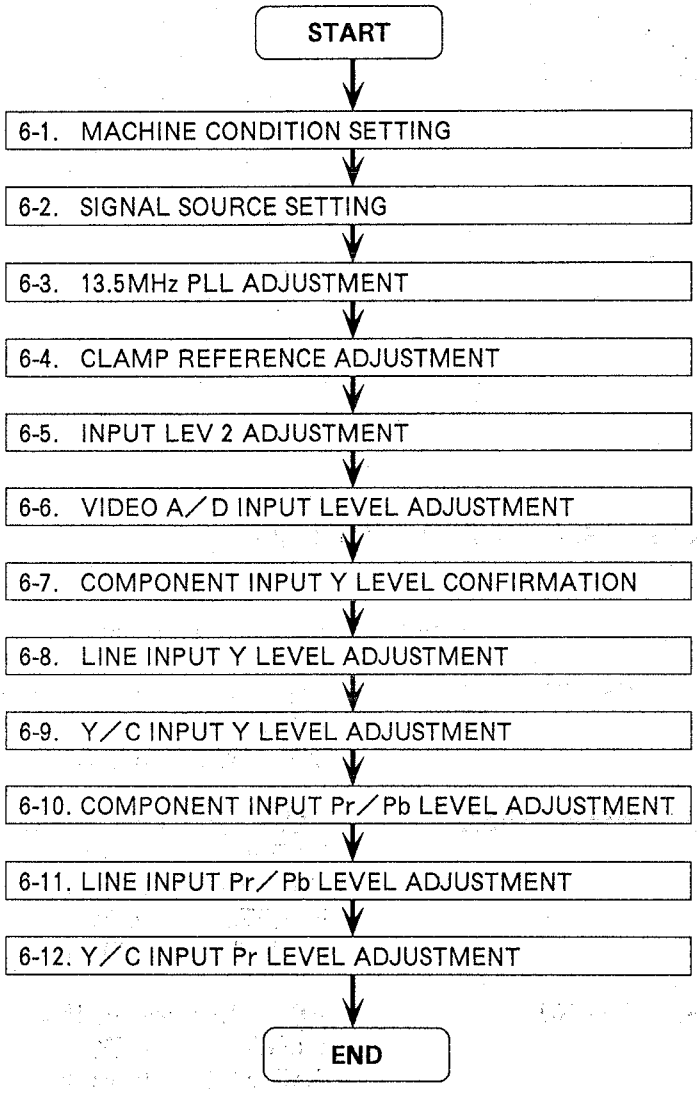

6-1. MACHINE CONDITION SETTING (W4 DEC & CTCM)

Set the switches on the FRONT PANEL as follows:

MODE	EE
VIDEO INPUT SELECT	LINE
VIDEO IN LEVEL	FIXED POSITION

6-2. SIGNAL SOURCE SETTING (W4 DEC & CTCM)

Confirm the output level of the signal Generator as follows:

1. COMPOSITE SIGNAL : 100% colour bar (without SET UP)
   VIDEO LEVEL = 0.7Vp-p
   SYNC LEVEL = 0.3Vp-p

2. COMPONENT SIGNAL : 100% colour bar (without SET UP)
   Y LEVEL = 0.7Vp-p
   SYNC LEVEL = 0.3Vp-p
   Pb LEVEL = 0.7Vp-p
   Pr LEVEL = 0.7Vp-p

3. Y/C SIGNAL : 100% colour bar (without SET UP)
   Y LEVEL = 0.7Vp-p
   SYNC LEVEL = 0.3Vp-p
   C LEVEL = 0.885Vp-p

6-3. 13.5MHz PLL ADJUSTMENT

(W4 DEC & CTCM)

TEST POINT	MODE	TAPE USED	M.EQ.	INPUT SIGNAL	ADJUSTMENT
TP701 TP703 TP704	E-E (EJECT)	BLANK ☐ TAPE ALIGNMENT ☐ TAPE	OSCILLOSCOPE	COMPONENT 100% COLOUR BAR	VL701 (PLL OFFS) VR702 (PLL POS)

ADJUSTMENT PROCEDURE & SPECIFICATION

MACHINE CONDITION	1. Refer to the SECTION 6-1. 2. VIDEO INPUT SELECT : COMPONENT
Step 1. 1. SCOPE CH1 : TP703 SCOPE CH2 : TP704 2. OSCILLOSCOPE SETTING EXT TRIGGER : COMPOSITE SYNC from SIGNAL GENERATOR Delay Mode : 200ns/Div. 3. Adjust VR702 so that the "A" period and "B" period are the same timing and the "PW" period is 33 ± 3ns as shown.	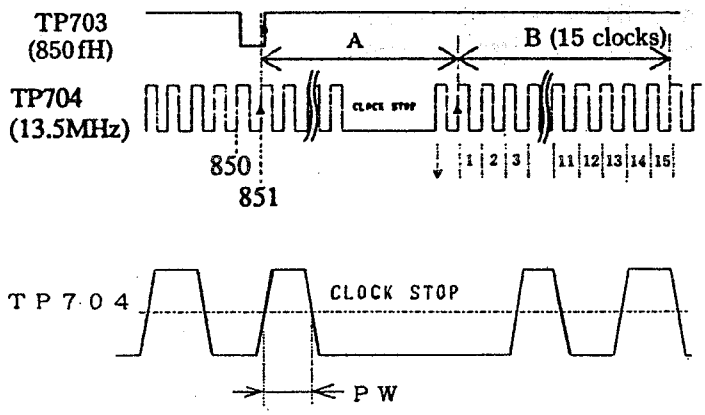 SPECIFICATION: A : B = 100% : 100% ± 2%
Step 2. 1. SCOPE : TP701 2. Adjust VL701 so that the DC voltage of TP701 is 0V ± 0.2V.	

6-4. CLAMP REFERENCE ADJUSTMENT

(W4 DEC & CTCM)

TEST POINT	MODE	TAPE USED	M.EQ.	INPUT SIGNAL	ADJUSTMENT
TP601	E-E (EJECT)	BLANK ☐ TAPE	OSCILLOSCOPE	COMPONENT 100% COLOUR BAR	VR601 (PB CLAMP REF) VR602 (PR CLAMP REF)
		ALIGNMENT ☐ TAPE			

ADJUSTMENT PROCEDURE & SPECIFICATION

MACHINE CONDITION	1. Refer to the SECTION 6-1. 2. VIDEO INPUT SELECT : COMPONENT
1. Adjust VR601 and VR602 so that level differences of "A" and "B" portion are minimum as shown.	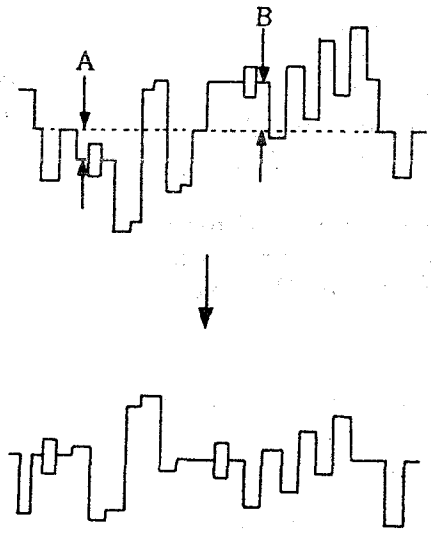

6-5. INPUT LEV 2 ADJUSTMENT

(W4 DEC & CTCM)

1. Preset VR219 to the 12 o'clock position.	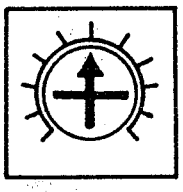

6-6. VIDEO A/D INPUT LEVEL ADJUSTMENT

(W4 DEC & CTCM)

TEST POINT	MODE	TAPE USED	M.EQ.	INPUT SIGNAL	ADJUSTMENT
TP41	E-E (EJECT)	BLANK ☐ TAPE ALIGNMENT ☐ TAPE	OSCILLOSCOPE	LINE INPUT 100% COLOUR BAR	VR1 (INPUT LEV 1)

ADJUSTMENT PROCEDURE & SPECIFICATION	
MACHINE CONDITION	Refer to the SECTION 6-1.
Step 1. 1. SCOPE : TP41 2. Adjust VR1 so that the input signal level (A) is 1.4Vp-p ± 0.02Vp-p as shown.	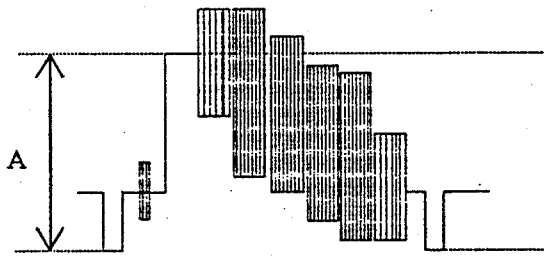 A = 1.4Vp-p ± 0.02Vp-p

6-7. COMPONENT INPUT Y LEVEL CONFIRMATION (W4 DEC & CTCM)

TEST POINT	MODE	TAPE USED	M.EQ.	INPUT SIGNAL	ADJUSTMENT
TP504	E-E (EJECT)	BLANK ☐ TAPE ALIGNMENT ☐ TAPE	OSCILLOSCOPE	COMPONENT 100% COLOUR BAR	----------

ADJUSTMENT PROCEDURE & SPECIFICATION	
MACHINE CONDITION	1. Refer to the SECTION 6-1. 2. VIDEO INPUT SELECT : COMPONENT
Step 1. 1. SCOPE : TP504 2. Confirm that the Y LEVEL is 550mVp-p ± 30mVp-p as shown.	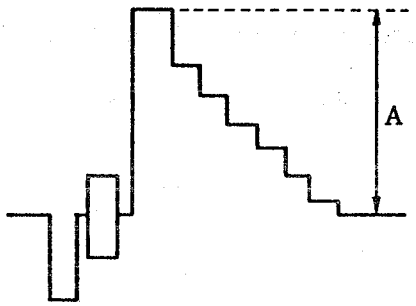 A = 550mVp-p ± 30mVp-p

6-8. LINE INPUT Y LEVEL ADJUSTMENT

(W4 DEC & CTCM)

TEST POINT	MODE	TAPE USED	M.EQ.	INPUT SIGNAL	ADJUSTMENT
TP504	E-E (EJECT)	BLANK ☐ TAPE ALIGNMENT ☐ TAPE	OSCILLOSCOPE	LINE INPUT 100% COLOUR BAR	VR141 (Y LEV 1)

ADJUSTMENT PROCEDURE & SPECIFICATION

MACHINE CONDITION	1. Refer to the SECTION 6-1.
Step 1. 1. SCOPE : TP504 2. Adjust VR141 so that the Y level (A) safisfies the following conditions. 1) The Y level (A) is 550mVp-p ± 30mVp-p as shown. 2) The difference between the Y level (A) of this adjustment and the Y level (A) of the COMPONENT INPUT Y LEVEL (6-7) is within±11mVp-p.	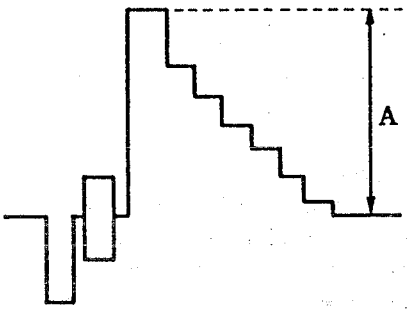 A = 550mVp-p ± 30mVp-p

6-9. Y/C INPUT Y LEVEL ADJUSTMENT

(W4 DEC & CTCM)

TEST POINT	MODE	TAPE USED	M.EQ.	INPUT SIGNAL	ADJUSTMENT
TP504	E-E (EJECT)	BLANK ☐ TAPE ALIGNMENT ☐ TAPE	OSCILLOSCOPE	YC INPUT 100% COLOUR BAR	VR142 (Y LEV 2)

ADJUSTMENT PROCEDURE & SPECIFICATION

MACHINE CONDITION	1. Refer to the SECTION 6-1. 2. VIDEO INPUT SELECT : YC 3. LINE INPUT Y LEVEL ADJ. (6-8) should be completed before this adjustment is done.
Step 1. 1. SCOPE : TP504 2. Adjust VR142 so that the Y level (A) satisfies the following conditions. 1) The Y level (A) is 550mVp-p ± 30mVp-p as shown. 2) The difference between the Y level (A) of this adjustment and the Y level (A) of the COMPONENT INPUT Y LEVEL (6-7) is within±11mVp-p.	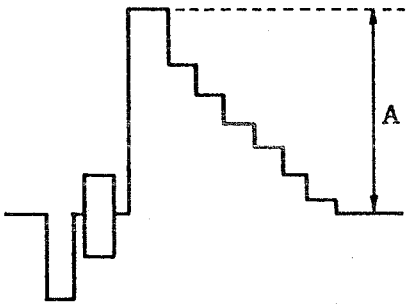 A = 550mVp-p ± 30mVp-p

6-10. COMPONENT INPUT Pr/Pb LEVEL ADJUSTMENT

(W4 DEC & CTCM)

TEST POINT	MODE	TAPE USED	M.EQ.	INPUT SIGNAL	ADJUSTMENT
TP601	E-E (EJECT)	BLANK ☐ TAPE ALIGNMENT ☐ TAPE	OSCILLOSCOPE	COMPONENT 100% COLOUR BAR	VR501 (Pr LEV 2) VR502 (Pb LEV 2)

ADJUSTMENT PROCEDURE & SPECIFICATION

MACHINE CONDITION	1. Refer to the SECTION 6-1. 2. VIDEO INPUT SELECT : COMPONENT
Step 1. 1. SCOPE : TP601	TP601
Step 2. 1. Confirm that the sync level (A) is 650mVp-p ± 100mVp-p as shown. 2. Set the sync level (A) to 6.5 divisions on the oscilloscope display (uncalibrated). 3. Confirm that the B and C levels are as shown below. B = 7.0 divisions ± 0.2 divisions C = 7.0 divisions ± 0.2 divisions 4. If it is not within specification, adjust VR501 so that the Pr level (B) is 7.0 divisions ± 0.2 divisions and adjust VR502 so that the Pb level (C) is 7.0 divisions ± 0.2 divisions. 5. After this adjustment, confirm the Burst level (D) is 3.0 divisions ± 0.2 divisions.	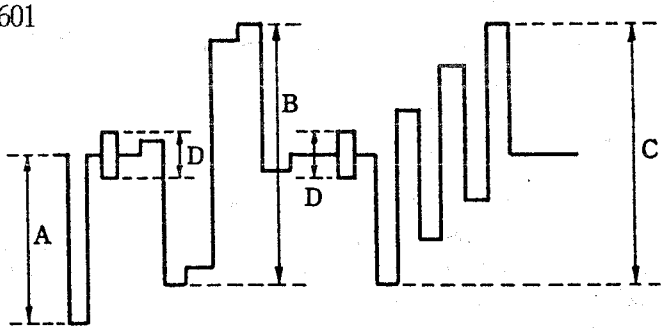 A = 650mVp-p ± 100mVp-p

6-11. LINE INPUT Pr/Pb LEVEL ADJUSTMENT (W4 DEC & CTCM)

TEST POINT	MODE	TAPE USED	M.EQ.	INPUT SIGNAL	ADJUSTMENT
TP601	E-E (EJECT)	☐ BLANK TAPE ☐ ALIGNMENT TAPE	OSCILLOSCOPE	LINE INPUT 100% COLOUR BAR	VR215 (PR LEV 1) VR213 (PB LEV 1)

ADJUSTMENT PROCEDURE & SPECIFICATION

MACHINE CONDITION	1. Refer to the SECTION 6-1. 2. COMPONENT INPUT Pr/Pb LEVEL ADJ. (6-10) should be completed before this adjustment is done.

Step 1.

1. SCOPE : TP601
2. Set the sync level (A) to 6.5 divisions on the oscilloscope display (uncalibrated).
3. Confirm that the B and C levels are as shown below.
   B = 7.0 divisions ± 0.2 divisions
   C = 7.0 divisions ± 0.2 divisions
4. If it is not within specification, adjust VR215 so that the Pr level (B) is 7.0 divisions ± 0.2 divisions and adjust VR213 so that the Pb level (C) is 7.0 divisions ± 0.2 divisions.

TP601

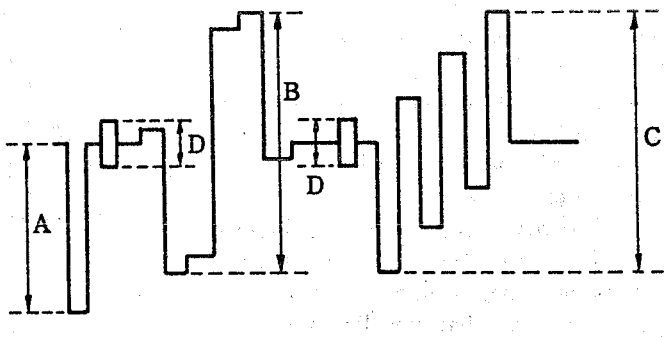

6-12. Y/C INPUT Pr LEVEL ADJUSTMENT

(W4 DEC & CTCM)

TEST POINT	MODE	TAPE USED	M.EQ.	INPUT SIGNAL	ADJUSTMENT
TP601	E-E (EJECT)	BLANK ☐ TAPE ALIGNMENT ☐ TAPE	OSCILLOSCOPE	YC INPUT 100% COLOUR BAR	VR165 (C LEV)

ADJUSTMENT PROCEDURE & SPECIFICATION

MACHINE CONDITION	1. Refer to the SECTION 6-1. 2. VIDEO INPUT SELECT : YC 3. The following adjustment should be completed before this adjustment is done. 1) COMPONENT INPUT Pr/Pb LEVEL ADJ. (6-10) 2) LINE INPUT Pr/Pb LEVEL ADJ. (6-11)
Step 1. 1. SCOPE : TP601 2. Set the sync level (A) to 6.5 divisions on the oscilloscope display (uncalibrated). 3. Confirm that the B level is 7.0 divisions ± 0.2 divisions. 4. If it is not within specification, adjust VR165 so that the Pr level (B) is 7.0 divisions ± 0.2 divisions.	TP601 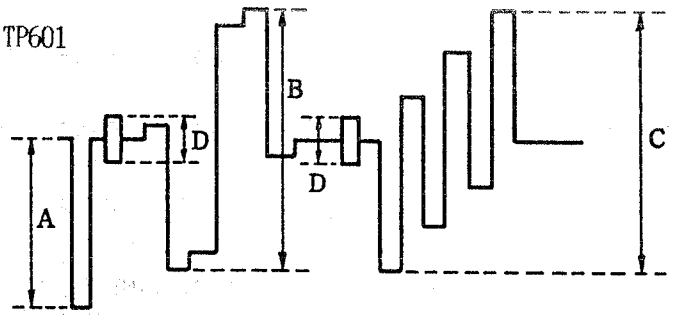

1 3. DEC & CTCM (W 4) BOARD (2/2)

DEC & CTCM (2/2) SECTION FLOWCHART

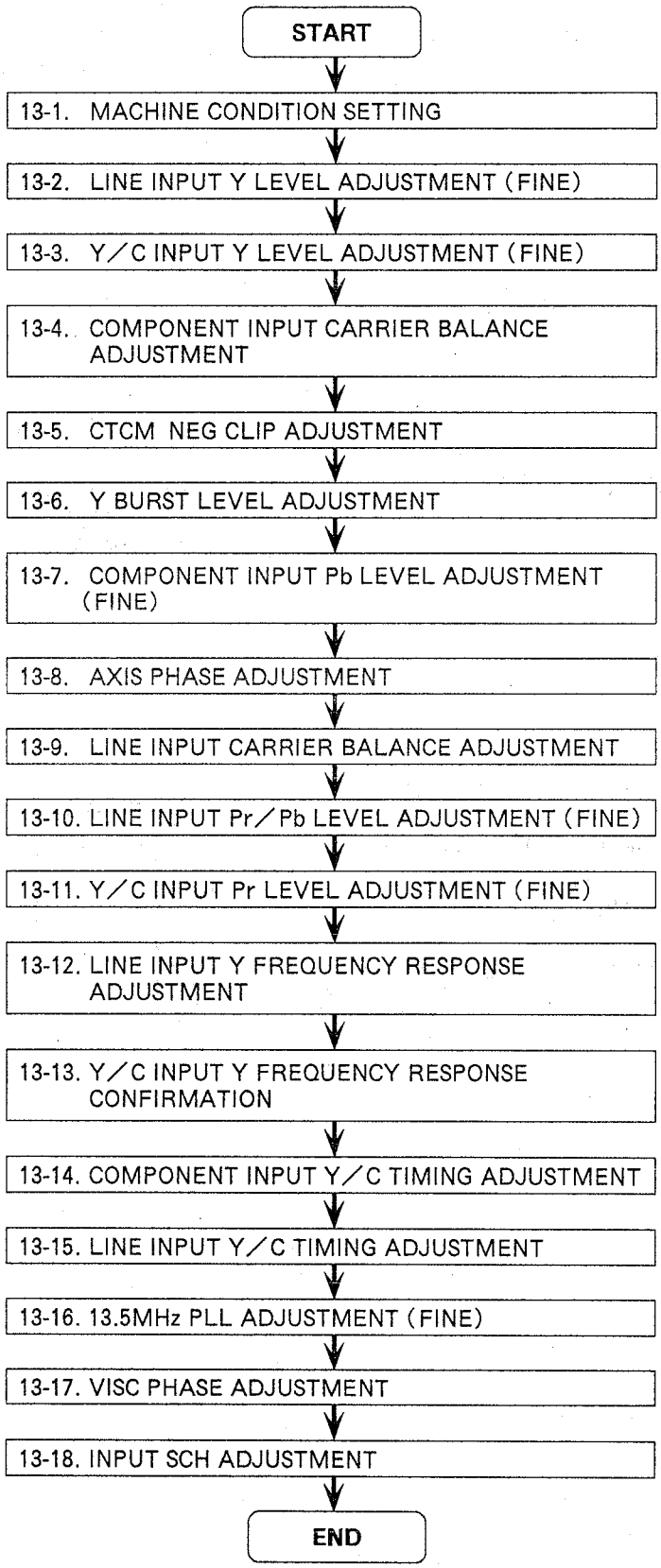

13-1. MACHINE CONDITION SETTING

(W4 DEC & CTCM)

Set the switches on the Front Panel of follows:

MODE	EE
VIDEO INPUT SELECT	LINE
VIDEO IN LEVEL	FIXED POSITION

13-2. LINE INPUT Y LEVEL ADJUSTMENT (FINE)

(W4 DEC & CTCM)

TEST POINT	MODE	TAPE USED	M.EQ.	INPUT SIGNAL	ADJUSTMENT
VIDEO 1 OUT (AU-W35H) VIDEO 2 OUT (AU-66H/65H) (W/75ohm Termination)	E-E (EJECT)	———	WAVEFORM MONITOR	LINE INPUT 100% COLOUR BAR	VR141 (Y LEV 1)

Step 1. MACHINE CONDITION	1. Refer to the SECTION 13-1.
Step 2. 1. Adjust VR141 so that the Y level (V) is 0.7 ± 0.016Vp-p as shown.	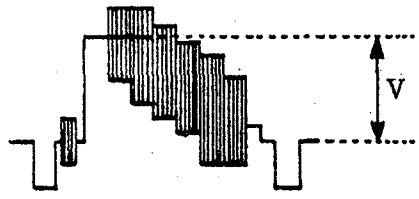 V = 0.7 ± 0.016Vp-p

13-3. Y/C INPUT Y LEVEL ADJUSTMENT (FINE)

(W4 DEC & CTCM)

TEST POINT	MODE	TAPE USED	M.EQ.	INPUT SIGNAL	ADJUSTMENT
VIDEO 1 OUT (AU-W35H) VIDEO 2 OUT (AU-66H/65H) (W/75ohm Termination)	E-E (EJECT)	------	WAVEFORM MONITOR	YC INPUT 100% COLOUR BAR	VR142 (Y LEV 2)

Step 1. MACHINE CONDITION	1. Refer to the SECTION 13-1. 2. VIDEO INPUT SELECT : YC
Step 2. 1. Adjust VR142 so that the Y level (V) is 0.7 ± 0.016Vp-p as shown.	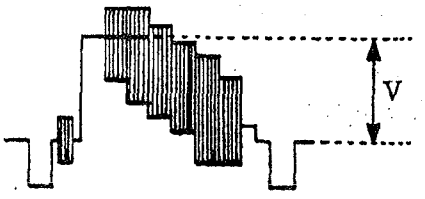 V = 0.7 ± 0.016Vp-p

13-4. COMPONENT INPUT CARRIER BALANCE ADJUSTMENT

(W4 DEC & CTCM)

TEST POINT	MODE	TAPE USED	M.EQ.	INPUT SIGNAL	ADJUSTMENT
COMPONENT Pb/Pr OUT	E-E (EJECT)	BLANK ☐ TAPE ALIGNMENT ☐ TAPE	OSCILLOSCOPE	COMPONENT 100% COLOUR BAR	VR601 (PB CLAMP REF) VR602 (PR CLAMP REF)

ADJUSTMENT PROCEDURE & SPECIFICATION	
MACHINE CONDITION	1. Refer to the SECTION 13-1. 2. VIDEO INPUT SELECT : COMPONENT
Step 1. 1. SCOPE : COMPONENT Pb OUT 2. Adjust VR601 so that the burst portion of Pb signal is "flat" as shown.	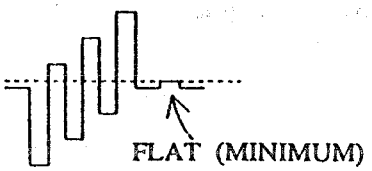
Step 2. 1. SCOPE : COMPONENT Pr OUT 2. Adjust VR602 so that the burst portion of Pr signal is "flat" as shown.	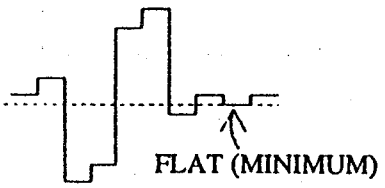

13-5. CTCM NEG CLIP ADJUSTMENT

(W4 DEC & CTCM)

TEST POINT	MODE	TAPE USED	M.EQ.	INPUT SIGNAL	ADJUSTMENT
TP601	E-E (EJECT)	BLANK ☐ TAPE	OSCILLOSCOPE	COMPONENT RAMP (OVERSIZE)	VR503 (NEG CLIP)
		ALIGNMENT ☐ TAPE			

ADJUSTMENT PROCEDURE & SPECIFICATION

MACHINE CONDITION	1. Refer to the SECTION 13-1. 2. VIDEO INPUT SELECT : COMPONENT
1. Adjust VR503 so that the A portion is 60mVp-p ± 5mVp-p as shown.	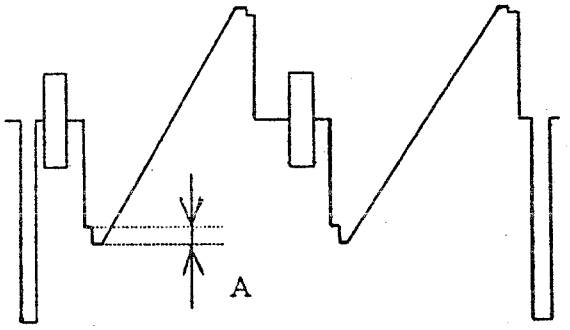 A = 60mVp-p ± 5mVp-p

13-6. Y BURST LEVEL ADJUSTMENT

(W4 DEC & CTCM)

TEST POINT	MODE	TAPE USED	M.EQ.	INPUT SIGNAL	ADJUSTMENT
TP504	E-E (EJECT)	☐ BLANK TAPE ☐ ALIGNMENT TAPE	OSCILLOSCOPE	COMPONENT 100% COLOUR BAR	VR906 (Y BU LEV)

ADJUSTMENT PROCEDURE & SPECIFICATION	
MACHINE CONDITION	1. Refer to the SECTION 13-1. 2. VIDEO INPUT SELECT : COMPONENT
Step 1. 1. SCOPE : TP504 2. Set the sync level (A) to 3.0 divisions on the oscilloscope display (uncalibrated).	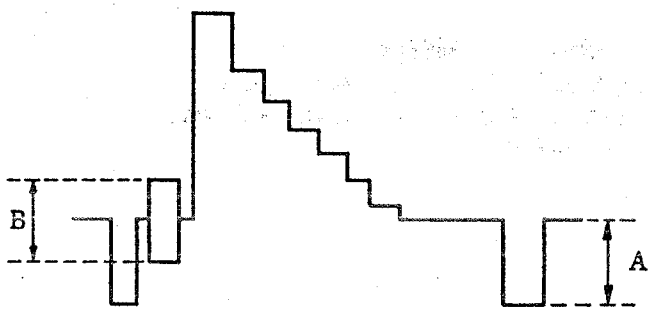 A = 3.0 DIVISIONS B = 3.0 ± 0.1 DIVISIONS
Step 2. 1. Adjust the Burst level (B) is 3.0 ± 0.1 divisions against the sync level (A) as shown.	

13-7. COMPONENT INPUT Pb LEVEL ADJUSTMENT (FINE)

(W4 DEC & CTCM)

TEST POINT	MODE	TAPE USED	M.EQ.	INPUT SIGNAL	ADJUSTMENT
COMPONENT Pb OUT (W/75ohm Termination)	E-E (EJECT)	------	OSCILLOSCOPE	COMPONENT 100% COLOUR BAR	VR502 (Pb LEV 2)

MACHINE CONDITION	1. Refer to the SECTION 13-1. 2. VIDEO INPUT SELECT : COMPONENT
Step 1. 1. Adjust VR502 so that the Pb level (B) is 0.7 ± 0.016Vp-p as shown.	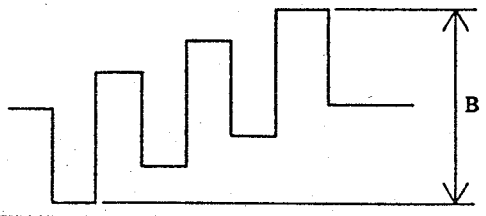

13-8. AXIS PHASE ADJUSTMENT

(W4 DEC & CTCM)

TEST POINT	MODE	TAPE USED	M.EQ.	INPUT SIGNAL	ADJUSTMENT
COMPONENT Pb/Pr OUT (W/75ohm Termination)	E-E (EJECT)	BLANK ☐ TAPE ALIGNMENT ☐ TAPE	OSCILLOSCOPE	LINE IN 100% COLOUR BAR	VR218 (AXIS 1) VC401 (AXIS 2)

ADJUSTMENT PROCEDURE & SPECIFICATION	
MACHINE CONDITION	1. Refer to the SECTION 13-1.
Step 1. 1. SCOPE : COMPONENT Pr OUT 2. Adjust VR218 so that the overlap portion of waveform becomes minimum as a whole.	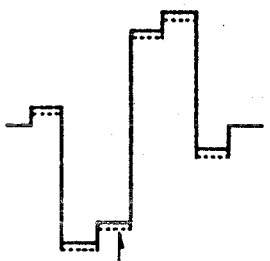 OVERLAP PORTION
Step 2. 1. SCOPE : COMPONENT Pb OUT 2. Adjust VC401 so that the overlap portion of waveform becomes minimum as a whole.	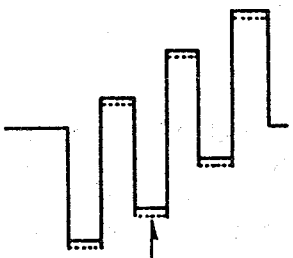 OVERLAP PORTION

13-9. LINE INPUT CARRIER BALANCE ADJUSTMENT

(W4 DEC & CTCM)

TEST POINT	MODE	TAPE USED	M.EQ.	INPUT SIGNAL	ADJUSTMENT
COMPONENT Pb/Pr OUT	E-E (EJECT)	BLANK ☐ TAPE ALIGNMENT ☐ TAPE	OSCILLOSCOPE	LINE IN 100% COLOUR BAR	VR216 (PB BLK DC) VR217 (PR BLK DC)

ADJUSTMENT PROCEDURE & SPECIFICATION

MACHINE CONDITION	1. Refer to the SECTION 13-1. 2. The following adjustments should be completed before this adjustment is done. 1) CARRIER LEAKAGE ADJ. (9-16) 2) COMPONENT INPUT CARRIER BALANCE ADJ. (13-4)
Step 1. 1. SCOPE : COMPONENT Pb OUT 2. Adjust VR216 so that the burst portion of Pb signal is"flat" as shown.	(Pb OUT) 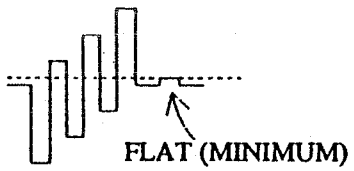
Step 2. 1. SCOPE : COMPONENT Pr OUT 2. Adjust VR217 so that the burst portion of Pr signal is "flat" as shown.	(Pr OUT) 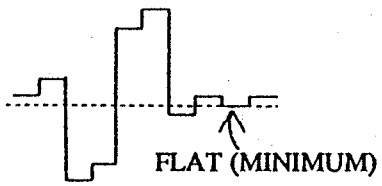

13-10. LINE INPUT Pr/Pb LEVEL ADJUSTMENT (FINE)

(W4 DEC & CTCM)

TEST POINT	MODE	TAPE USED	M.EQ.	INPUT SIGNAL	ADJUSTMENT
COMPONENT Pb/Pr OUT (W/75ohm Termination)	E-E (EJECT)	BLANK ☐ TAPE ALIGNMENT ☐ TAPE	OSCILLOSCOPE	LINE INPUT 100% COLOUR BAR	VR213 (PB LEV 1) VR215 (PR LEV 1)

ADJUSTMENT PROCEDURE & SPECIFICATION	
MACHINE CONDITION	1. Refer to the SECTION 13-1. 2. The following adjustments should be completed before this adjustment is done. 1) COMPONENT Pb LEVEL ADJ. (9-9) 2) COMPONENT Pr LEVEL ADJ. (9-11) 3) COMPONENT INPUT Pb LEVEL ADJ. (13-7)
Step 1. 1. SCOPE : COMPONENT Pb OUT 2. Adjust VR213 so that the Pb level (G) is 0.7 ± 0.016Vp-p as shown.	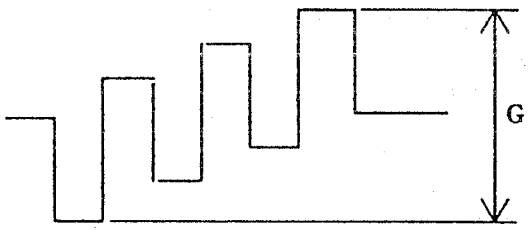 G = 0.7 ± 0.016Vp-p
Step 2. 1. SCOPE : COMPONENT Pr OUT 2. Adjust VR215 so that the Pr level (E) is 0.7 ± 0.016Vp-p as shown.	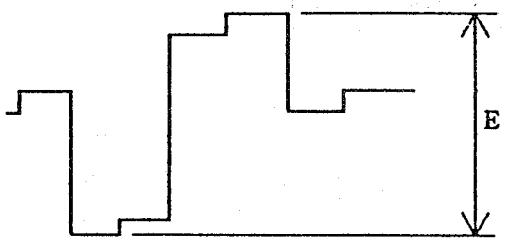 E = 0.7 ± 0.016Vp-p

13-11. Y/C INPUT Pr LEVEL ADJUSTMENT (FINE)

(W4 DEC & CTCM)

TEST POINT	MODE	TAPE USED	M.EQ.	INPUT SIGNAL	ADJUSTMENT
COMPONENT Pr OUT (W/75ohm Termination)	E-E (EJECT)	———	OSCILLOSCOPE	YC IN 100% COLOUR BAR	VR165 (C LEV)
MACHINE CONDITION			1. Refer to the SECTION 13-1. 2. VIDEO INPUT SELECT : YC		
Step 1. 1. Adjust VR165 so that the Pr level (A) is 0.7 ± 0.016Vp-p as shown.			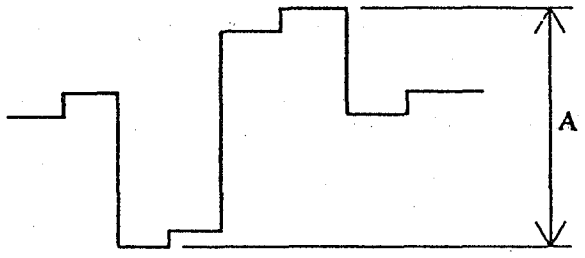		

13-12. LINE INPUT Y FREQUENCY RESPONSE ADJUSTMENT

(W4 DEC & CTCM)

TEST POINT	MODE	TAPE USED	M.EQ.	INPUT SIGNAL	ADJUSTMENT
COMPONENT Y OUT (W/75ohm Termination)	E-E (EJECT)	BLANK ☐ TAPE	OSCILLOSCOPE OR WAVEFORM MONITOR	Step 1. COMPONENT 60% H.SWEEP (NO BURST)	VC141 (Y FREQ)
		ALIGNMENT ☐ TAPE		Step 2. LINE IN 60% H.SWEEP (NO BURST)	

ADJUSTMENT PROCEDURE & SPECIFICATION

MACHINE CONDITION	1. Refer to the SECTION 13-1. 2. The following adjustments should be completed before this adjustment is done. 1) Y PLAYBACK FREQUENCY RESPONSE ADJ. (7-39) 2) Y OUTPUT FREQUENCY RESPONSE ADJ. (9-24)
Step 1. 1. INPUT POINT : COMPONENT IN 2. VIDEO INPUT SELECT : COMPONENT 3. Check the frequency response 0.5MHz : 5MHz (0.5MHz = 100% : Reference) and notate it.	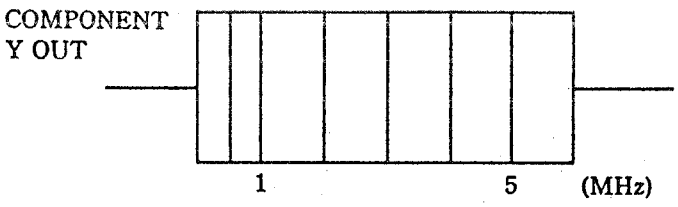 0.5MHz = 100% (Reference) 5.0MHz = A%
Step 2. 1. INPUT POINT : LINE IN 2. VIDEO INPUT SELECT : LINE 3. Adjust VC141 so that the frequency response is as shown.	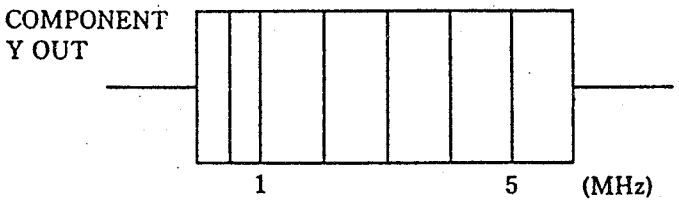 0.5MHz = 100% (Reference) 5.0MHz = A% ± 2% Note : A is the frequency response at 5.0MHz of the COMPONENT input.

13-13. YC INPUT Y FREQUENCY RESPONSE CONFIRMATION

(W4 DEC & CTCM)

TEST POINT	MODE	TAPE USED	M.EQ.	INPUT SIGNAL	ADJUSTMENT
COMPONENT Y OUT (W/75ohm Termination)	E-E (EJECT)	BLANK ☐ TAPE	OSCILLOSCOPE OR WAVEFORM MONITOR	Step 1. COMPONENT 60% H.SWEEP (NO BURST)	- - - - - -
		ALIGNMENT ☐ TAPE		Step 2. YC IN 60% H.SWEEP (NO BURST)	

ADJUSTMENT PROCEDURE & SPECIFICATION

MACHINE CONDITION	1. Refer to the SECTION 13-1. 2. The following adjustments should be completed before this CONFIRMATION is done. 1) Y PLAYBACK FREQUENCY RESPONSE ADJ. (7-39) 2) Y OUTPUT FREQUENCY RESPONSE ADJ. (9-24) 3) LINE INPUT Y FREQUENCY RESPONSE ADJ. (13-12)
Step 1. 1. INPUT POINT : COMPONENT IN 2. VIDEO INPUT SELECT : COMPONENT 3. Check the frequency response 0.5MHz : 5MHz (0.5MHz = 100% : Reference) and notate it.	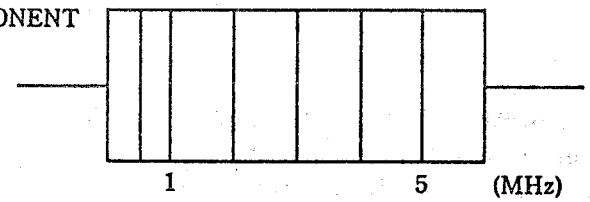 0.5MHz = 100% (Reference) 5.0MHz = A%
Step 2. 1. INPUT POINT : YC IN 2. VIDEO INPUT SELECT : YC 3. Confirm that the frequency response is as shown.	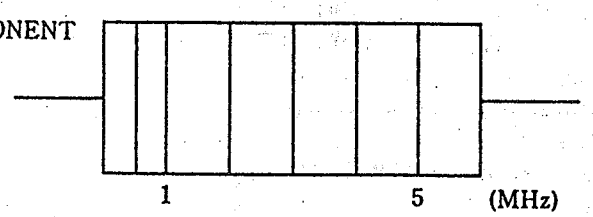 0.5MHz = 100% (Reference) 5.0MHz = A% +5/-10% Note : A is the frequency response at 5.0MHz of the COMPONENT input.

13-14(A). COMPONENT INPUT Y/C TIMING ADJUSTMENT (BY USING WAVEFORM MONITOR)

(W4 DEC & CTCM)

TEST POINT	MODE	TAPE USED	M.EQ.	INPUT SIGNAL	ADJUSTMENT
COMPONENT Y OUT Pb OUT Pr OUT	SELF REC/PB	■ BLANK TAPE □ ALIGNMENT TAPE	WAVEFORM MONITOR	COMPONENT PULSE & BAR (MOD. 20T)	VC501 (PR TMG 2) VC502 (PB TMG 2)

ADJUSTMENT PROCEDURE & SPECIFICATION

MACHINE CONDITION	1. Refer to the SECTION 13-1. 2. VIDEO INPUT SELECT : COMPONENT 3. COMPONENT Y/C TIMING ADJ. (9-18) should be completed before this adjustment is done.
Step 1. 1. WAVEFORM MONITOR CONDITION	RESPONSE : DIFFD STEP mode VOLTS FULL SCALE : MAX (UNCAL) DISPLAY : × 1 (5) MAGNIFIER : ×50 (0.1) TRIGGER : VIDEO OUT OF VTR
Step 2. Note: The COMPONENT OUTPUT CABLE LENGTH should be all the same length. 1. Make a recording, then playback the just recorded portion. 2. WFM MONITOR CHA : COMPONENT Y OUT CHB : COMPONENT Pr OUT EXT SYNC CH1 : VIDEO OUT CH2 : VIDEO OUT 3. Observe the falling portion of the modulated 20T pulse signal. 4. Adjust the vertical and horizontal position of the WFM Monitor so that the centre line of falling edge is set to 0.3 axis as shown. 5. Change the Input Select of the WFM Switch from the Ach (COMPONENT Y OUT) to the Bch (COMPONENT Pr OUT). 6. Measure the difference between the Y and Pr signal timing. 7. If it is not within ± 20ns, adjust VC501. 8. WFM MONITOR CHA : COMPONENT Y OUT CHB : COMPONENT Pb OUT 9. Measure the difference between the Y and Pb signal timing. 10. If it is not within±20ns, adjust VC502 and repeat #1 thru #10 of Step 2.	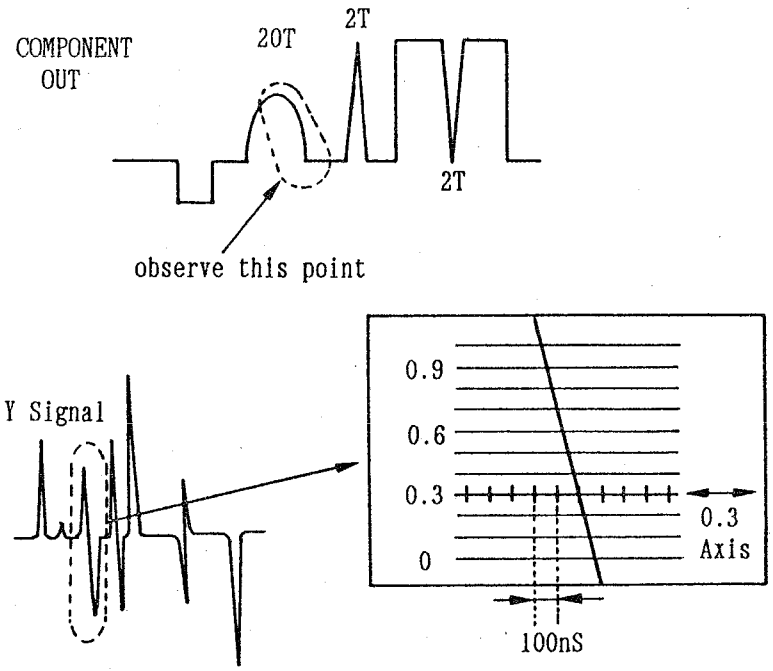 SPECIFICATION : Y/C TIMING = ± 20ns

13-14(B). COMPONENT INPUT Y/C TIMING ADJUSTMENT (BY USING OSCILLOSCOPE)

(W4 DEC & CTCM)

TEST POINT	MODE	TAPE USED	M.EQ.	INPUT SIGNAL	ADJUSTMENT
COMPONENT Y OUT Pb OUT Pr OUT	SELF REC/PB	BLANK ■ TAPE ALIGNMENT □ TAPE	OSCILLOSCOPE	COMPONENT 100% COLOUR BAR	VC501 (PR TMG 2) VC502 (PB TMG 2)

ADJUSTMENT PROCEDURE & SPECIFICATION

MACHINE CONDITION	1. Refer to the SECTION 13-1. 2. VIDEO INPUT SELECT : COMPONENT 3. COMPONENT Y/C TIMING ADJ. (9-18) should be completed before this adjustment is done.

Step 1.

Note:
COMPONENT OUTPUT CABLE LENGTH should be the same length.

1. Make a recording, then playback the just recorded portion.
2. SCOPE CH1 : COMPONENT Y OUT
   SCOPE CH2 : COMPONENT Pr OUT
3. Confirm that the Y/Pr Timing of "A" portion is less than 20ns as shown.
4. If it is not within specification, adjust VC501 so that the Y/Pr Timing of "A" portion is less than 20ns.
5. SCOPE CH1 : COMPONENT Y OUT
   SCOPE CH2 : COMPONENT Pb OUT
6. Confirm that the Y/Pb Timing of "B" portion is less than 20ns as shown.
7. If it is not within specification, adjust VC502 so that the Y/Pb Timing of "B" portion is less than 20ns and repeat #1 thru #7.

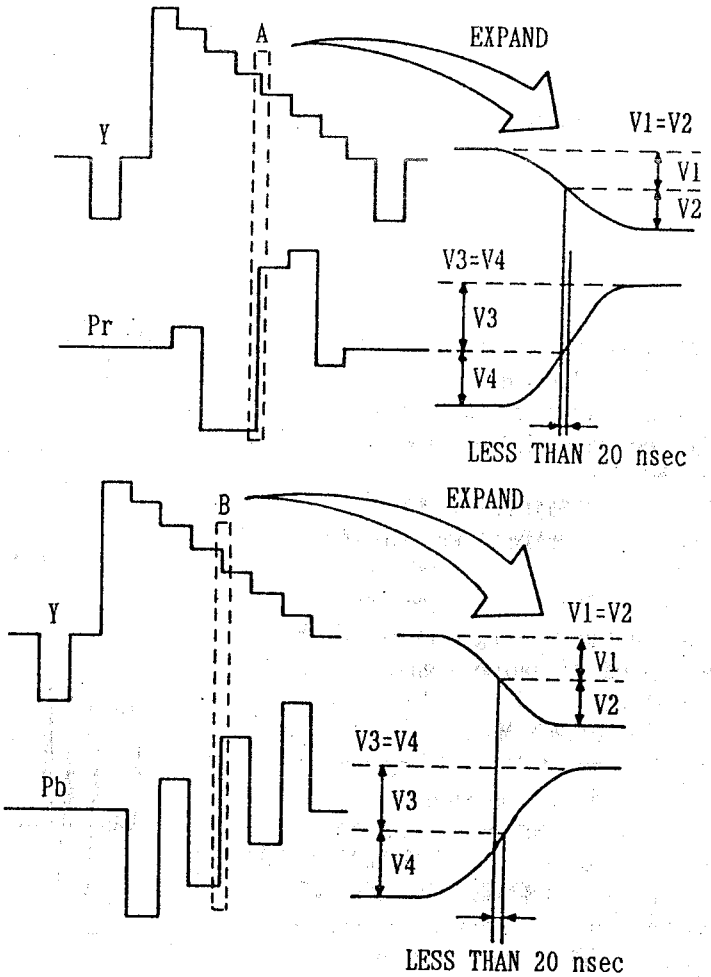

13-15(A). LINE INPUT Y/C TIMING ADJUSTMENT (BY USING WAVEFORM MONITOR)

(W4 DEC & CTCM)

TEST POINT	MODE	TAPE USED	M.EQ.	INPUT SIGNAL	ADJUSTMENT
COMPONENT Y OUT Pb OUT Pr OUT	SELF REC/PB	■ BLANK TAPE □ ALIGNMENT TAPE	WAVEFORM MONITOR	LINE IN PULSE & BAR (MOD. 20T)	VR214 (PR TMG 1) VR212 (PB TMG 1)

ADJUSTMENT PROCEDURE & SPECIFICATION

MACHINE CONDITION	1. Refer to the SECTION 13-1. 2. The following adjustments should be completed before this adjustment is done. 1) COMPOSITE Y/C TIMING ADJ. (9-19) 2) COMPONENT INPUT Y/C TIMING ADJ. (13-14)
Step 1. 1. WAVEFORM MONITOR CONDITION	RESPONSE : DIFFD STEP mode VOLTS FULL SCALE : MAX (UNCAL) DISPLAY : × 1 (5) MAGNIFIER : ×50 (0.1) TRIGGER : VIDEO OUT OF VTR
Step 2. Note: COMPONENT OUTPUT CABLE LENGTH should be the same length. 1. Make a recording, then playback the just recorded portion. 2. WFM MONITOR CHA : COMPONENT Y OUT CHB : COMPONENT Pr (Pb) OUT EXT SYNC CH A : VIDEO OUT CH B : VIDEO OUT 3. Observe the falling portion of the modulated 20T pulse signal. 4. Adjust the vertical and horizontal position of WFM Monitor so that the centre line of the falling edge is set to 0.3 axis as shown. 5. Change the Input Select of WFM Switch from the Ach (COMPONENT Y OUT) to the Bch (COMPONENT Pr (Pb) OUT). 6. Measure the difference between the Y and Pr (Pb) signal timing. 7. If it is not within ± 20ns, adjust VR214 (Pr) and VR212 (Pb) and repeat #1 thru #7 of Step 2.	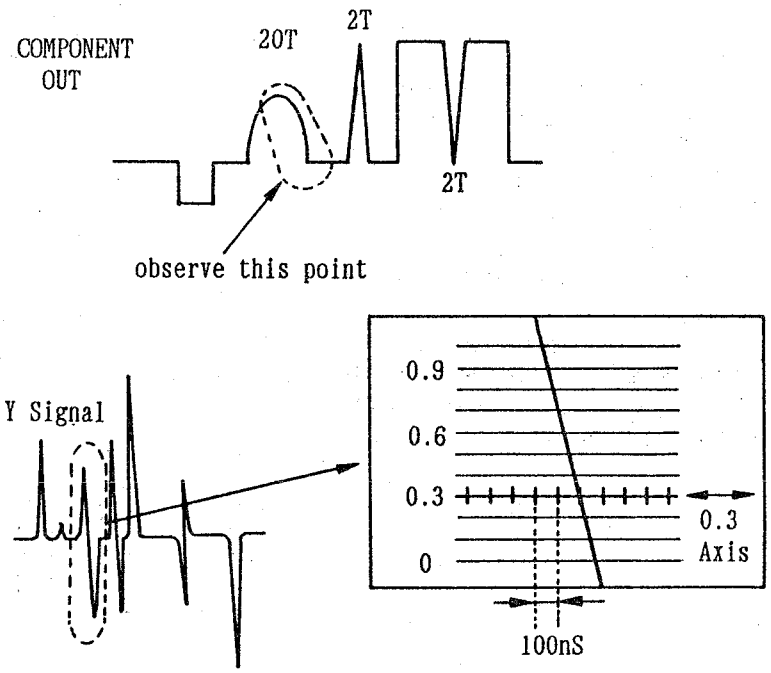

13-15(B). LINE INPUT Y/C TIMING ADJUSTMENT (BY USING OSCILLOSCOPE)

(W4 DEC & CTCM)

TEST POINT	MODE	TAPE USED	M.EQ.	INPUT SIGNAL	ADJUSTMENT
COMPONENT Y OUT Pb OUT Pr OUT	SELF REC/PB	BLANK ■ TAPE ALIGNMENT □ TAPE	OSCILLOSCOPE	LINE IN COLOUR BAR	VR214 (PR TMG 1) VR212 (PB TMG 1)

ADJUSTMENT PROCEDURE & SPECIFICATION

MACHINE CONDITION	1. Refer to the SECTION 13-1. 2. The following adjustments should be completed before this adjustment is done. 1) COMPOSITE Y/C TIMING ADJ. (9-19) 2) COMPONENT INPUT Y/C TIMING ADJ. (13-14)

Step 1.

Note:
COMPONENT OUTPUT CABLE LENGTH should be the same length.

1. Make a recording for a few minutes.
2. Playback the just recorded portion.
3. SCOPE CH1 : COMPONENT Y OUT
   SCOPE CH2 : COMPONENT Pr OUT
4. Confirm that the Y/Pr Timing of the "A" portion is less than 20ns as shown.
5. If it is not within specification, adjust VR214 (Pr) so that the Y/Pr Timing of the "A" portion is less than 20ns.
6. SCOPE CH1 : COMPONENT Y OUT
   SCOPE CH2 : COMPONENT Pb OUT
7. Confirm that the Y/Pb Timing of the "B" portion is less than 20ns as shown.
8. If it is not within specification, adjust VR212 (Pb) so that the Y/Pb Timing of "B" portion is less than 20ns and repeat #1 thru #8.

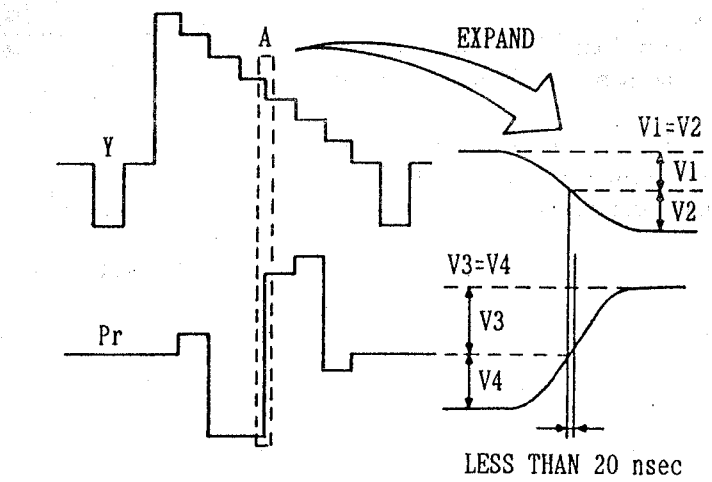

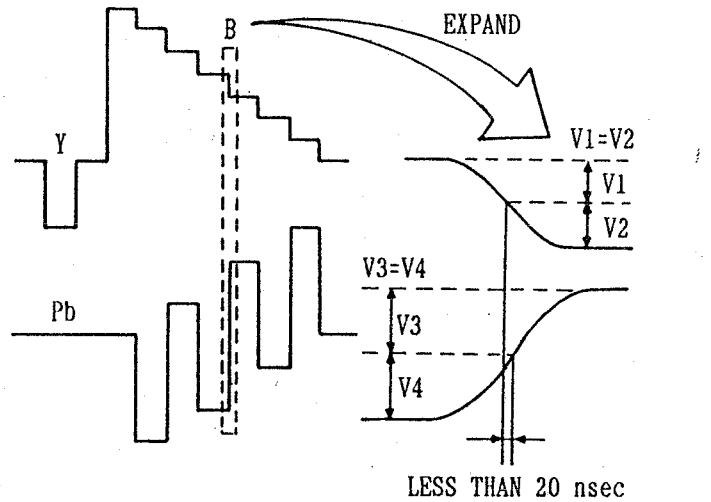

13-16. 13.5MHz PLL ADJUSTMENT (FINE)

(W4 DEC & CTCM)

TEST POINT	MODE	TAPE USED	M.EQ.	INPUT SIGNAL	ADJUSTMENT
VIDEO 1 OUT (AU-W35H) (W/75ohm Termination) VIDEO 2 OUT (AU-66H/65H) (W/75ohm Termination)	SELF REC/PB	BLANK ■ TAPE ALIGNMENT □ TAPE	VECTORSCOPE	LINE IN 100% COLOUR BAR WITH VITS SIGNAL	VR701 (SYNC ϕ)

ADJUSTMENT PROCEDURE & SPECIFICATION

MACHINE CONDITION

1. Refer to the SECTION 13-1.

Step 1.

1. Place the unit in the record mode.
2. Then playback the just recorded portion.
3. Confirm that the VITS signal phase is the same as the-U axis as shown (0° ± 2°).
4. If it is not within specification, fine adjust VR701 so that the phase difference is 0° ± 2°.

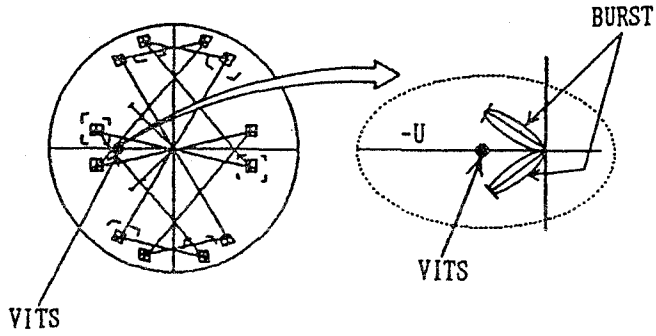

SPECIFICATION : Phase difference = 0° ± 2° (degrees)

13-17. VISC PHASE ADJUSTMENT

(W4 DEC & CTCM)

TEST POINT	MODE	TAPE USED	M.EQ.	INPUT SIGNAL	ADJUSTMENT
VIDEO 1 OUT (AU-W35H) (W/75ohm Termination) VIDEO 2 OUT (AU-66H/65H) (W/75ohm Termination)	E-E (EJECT)	BLANK ☐ TAPE ALIGNMENT ☐ TAPE	VECTORSCOPE	LINE IN 100% COLOUR BAR WITH VITS SIGNAL	VR81 (VISC PHA)

ADJUSTMENT PROCEDURE & SPECIFICATION

MACHINE CONDITION	1. Refer to the SECTION 13-1. 2. STD/NSTD SELECT : STD (Set-up Menu No.1011 → 00 Front Switch)
Step 1. 1. SW7 (on W1) : OFF 2. Confirm that the phase of the VISC signal and the VITS signal are equal. 3. If it is not within specification, adjust VR81 so that the phase of the VISC signal and the VITS signal are the same. 4. After this adjustment, set SW7 (on W1) to the "ON" position.	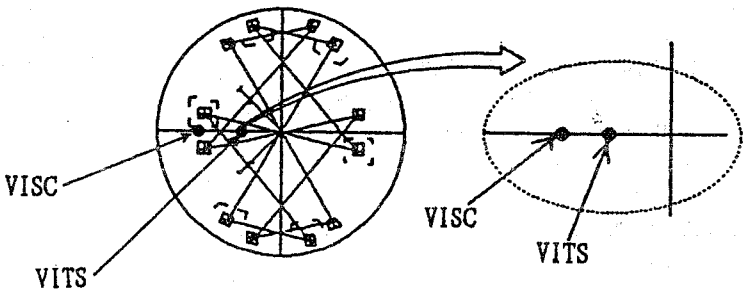 SPECIFICATION: PHASE DIFFERENCE = 0° ± 2° (degrees)

13-18. INPUT SCH ADJUSTMENT

(W4 DEC & CTCM)

TEST POINT	MODE	TAPE USED	M.EQ.	INPUT SIGNAL	ADJUSTMENT
TP401 TP402	E-E (EJECT)	- - - - -	SCH METER OSCILLOSCOPE	LINE IN COMPOSITE SIGNAL (SCH 0°)	VR401 (SCH -)

Step 1.

CONNECTION METHOD

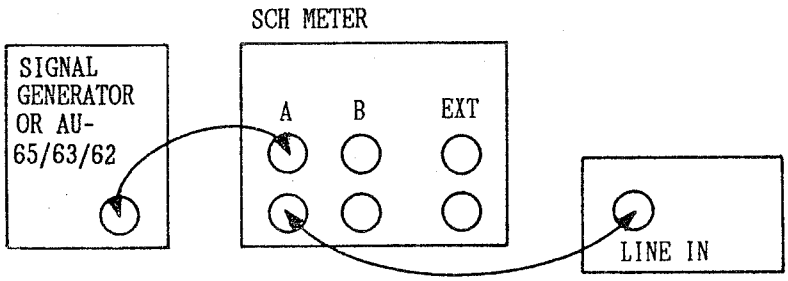

Step 2.

1. SCH METER : SCH MODE
2. Adjust SIGNAL GEN or another MII VTR so that the SCH phase becomes ± 0° .
3. Connect the oscilloscope to TP401 and TP402.
4. Adjust VR401 so that the (A) equal (B) as shown in figure.

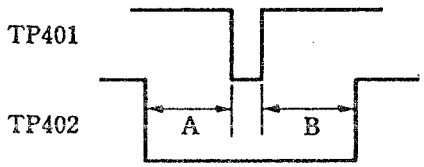

A = B ± 0.5 msec

W4 (DEC & CTCM) BLOCK DIAGRAM (1/4)

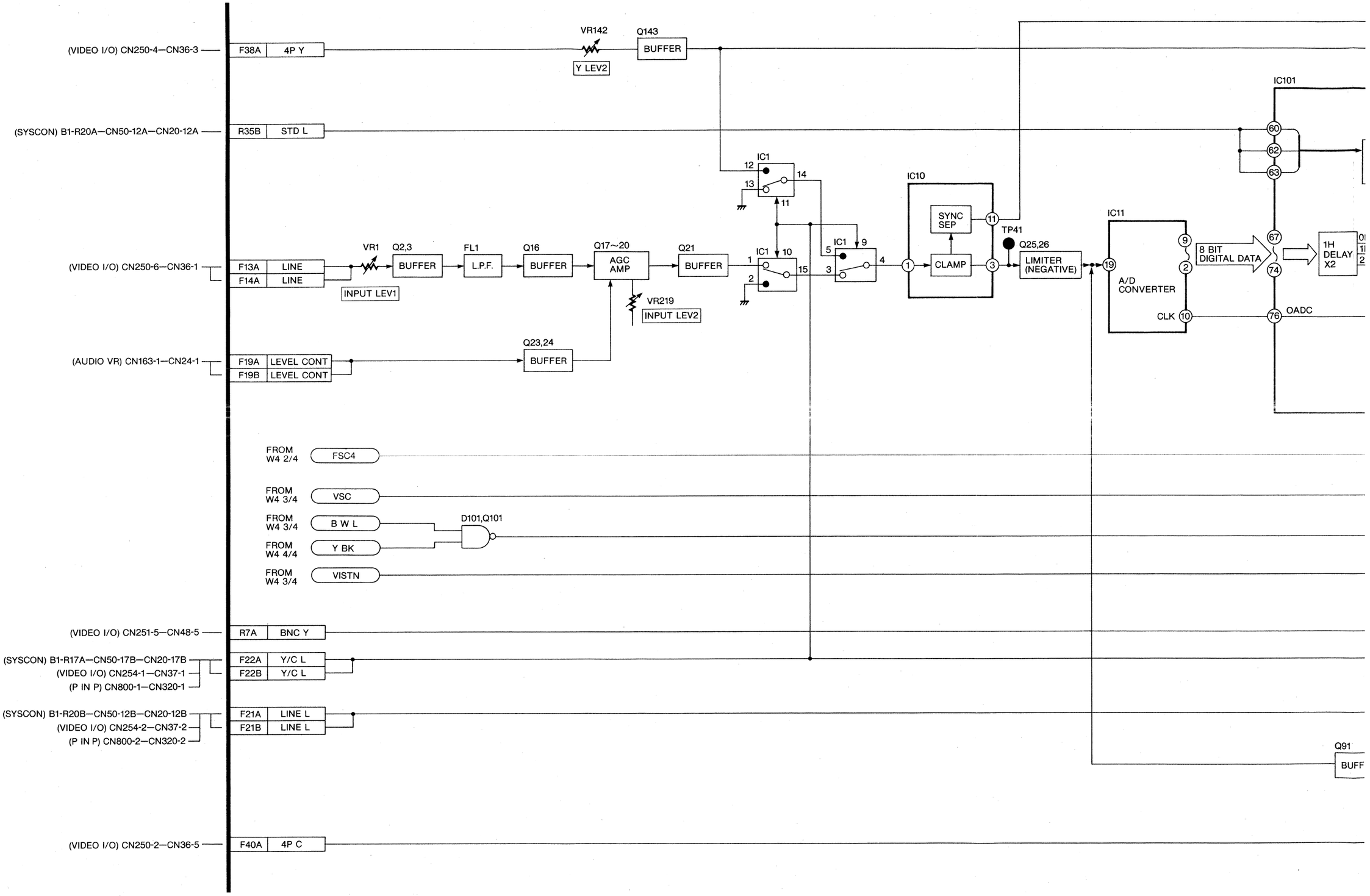

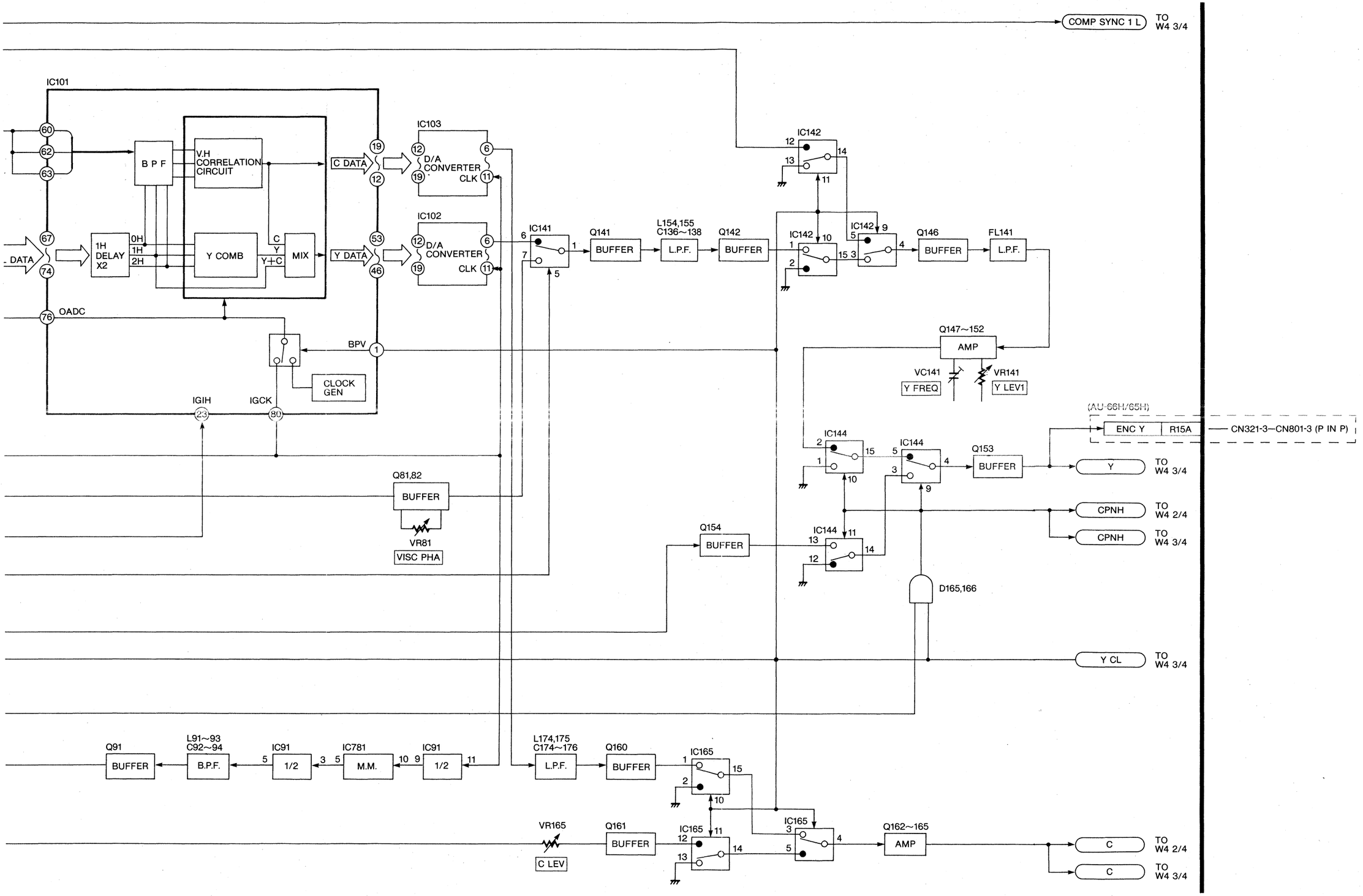
COMP SYNC 1 L
TO W4 3/4
IC101
60
62
63
B P F
V.H CORRELATION CIRCUIT
C DATA
19
12
IC103
D/A CONVERTER
CLK
IC142
12
13
14
11
67
74
- DATA
1H DELAY X2
0H
1H
2H
Y COMB
C
Y
Y+C
MIX
Y DATA
53
46
IC102
IC141
6
7
1
5
Q141
BUFFER
L154,155
C136~138
L.P.F.
Q142
BUFFER
IC142
10
1
2
15 3
IC142
9
5
4
Q146
BUFFER
FL141
L.P.F.
76
OADC
BPV
1
Q147~152
AMP
VC141
Y FREQ
VR141
Y LEV1
CLOCK GEN
IGIH
23
IGCK
80
(AU-66H/65H)
ENC Y
R15A
CN321-3—CN801-3 (P IN P)
IC144
2
1
15
10
IC144
5
3
4
9
Q153
BUFFER
Y
TO W4 3/4
CPNH
TO W4 2/4
CPNH
TO W4 3/4
Q81,82
BUFFER
VR81
VISC PHA
Q154
BUFFER
IC144
13
12
11
14
D165,166
Y CL
TO W4 3/4
Q91
BUFFER
L91~93
C92~94
B.P.F.
IC91
5
1/2
3
IC781
5
M.M.
10
IC91
9
1/2
11
L174,175
C174~176
L.P.F.
Q160
BUFFER
IC165
1
2
15
10
VR165
C LEV
Q161
BUFFER
IC165
12
13
11
14
IC165
3
5
4
Q162~165
AMP
C
TO W4 2/4
C
TO W4 3/4

W4 (DEC & CTCM) BLOCK DIAGRAM (2/4)

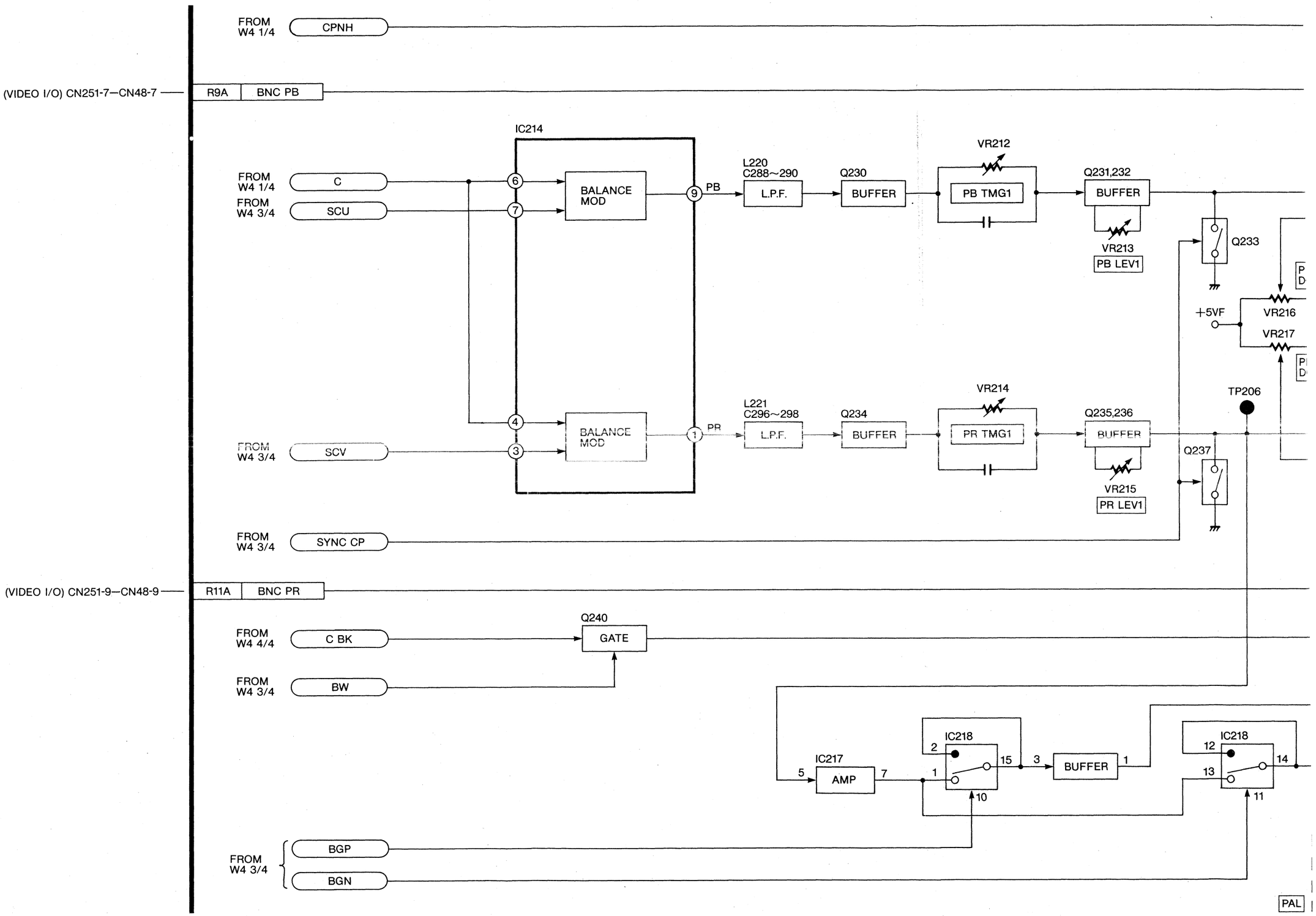

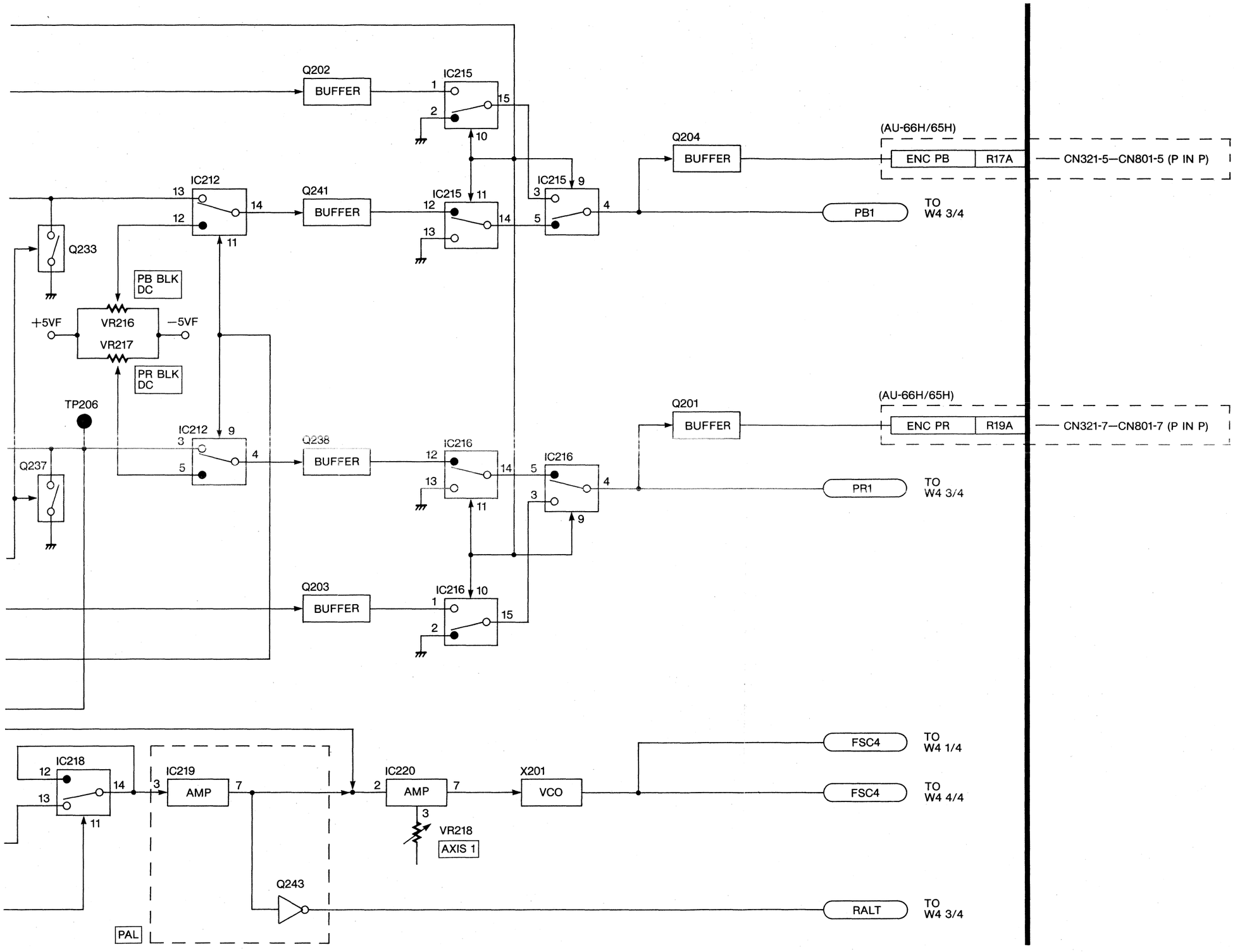
Q202
BUFFER
IC215
1
2
15
10
IC212
13
12
14
11
Q241
BUFFER
IC215
12
13
14
11
IC215
3
5
9
4
Q204
BUFFER
(AU-66H/65H)
ENC PB
R17A
CN321-5—CN801-5 (P IN P)
PB1
TO
W4 3/4
Q233
PB BLK
DC
+5VF
VR216
VR217
−5VF
PR BLK
DC
TP206
IC212
3
5
9
4
Q238
BUFFER
IC216
12
13
14
11
IC216
5
3
9
4
Q201
BUFFER
(AU-66H/65H)
ENC PR
R19A
CN321-7—CN801-7 (P IN P)
PR1
TO
W4 3/4
Q237
Q203
BUFFER
IC216
10
1
2
15
IC218
12
13
14
11
IC219
AMP
3
7
IC220
AMP
2
7
3
X201
VCO
VR218
AXIS 1
FSC4
TO
W4 1/4
FSC4
TO
W4 4/4
Q243
RALT
TO
W4 3/4
PAL

W4 (DEC & CTCM) BLOCK DIAGRAM (3/4)

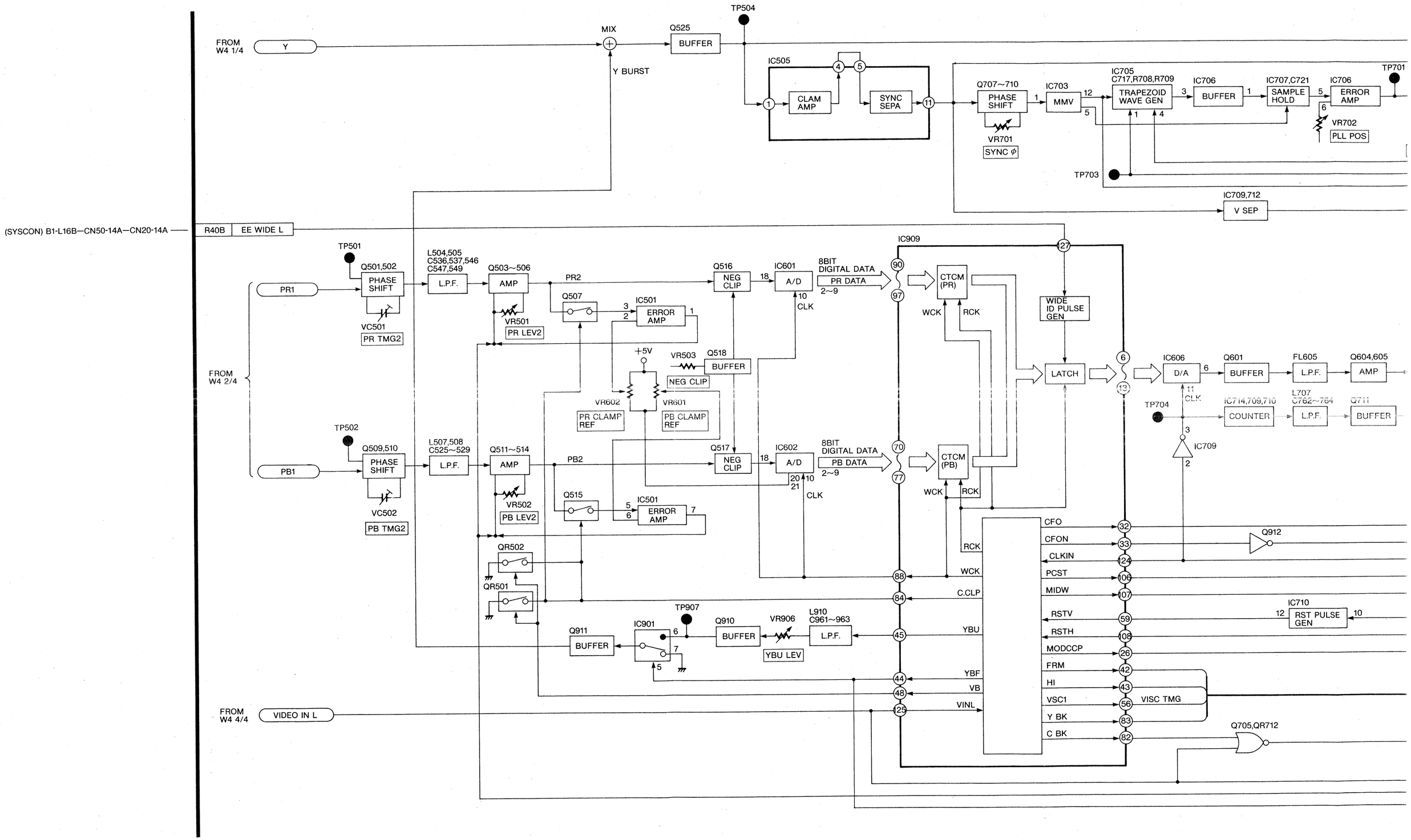

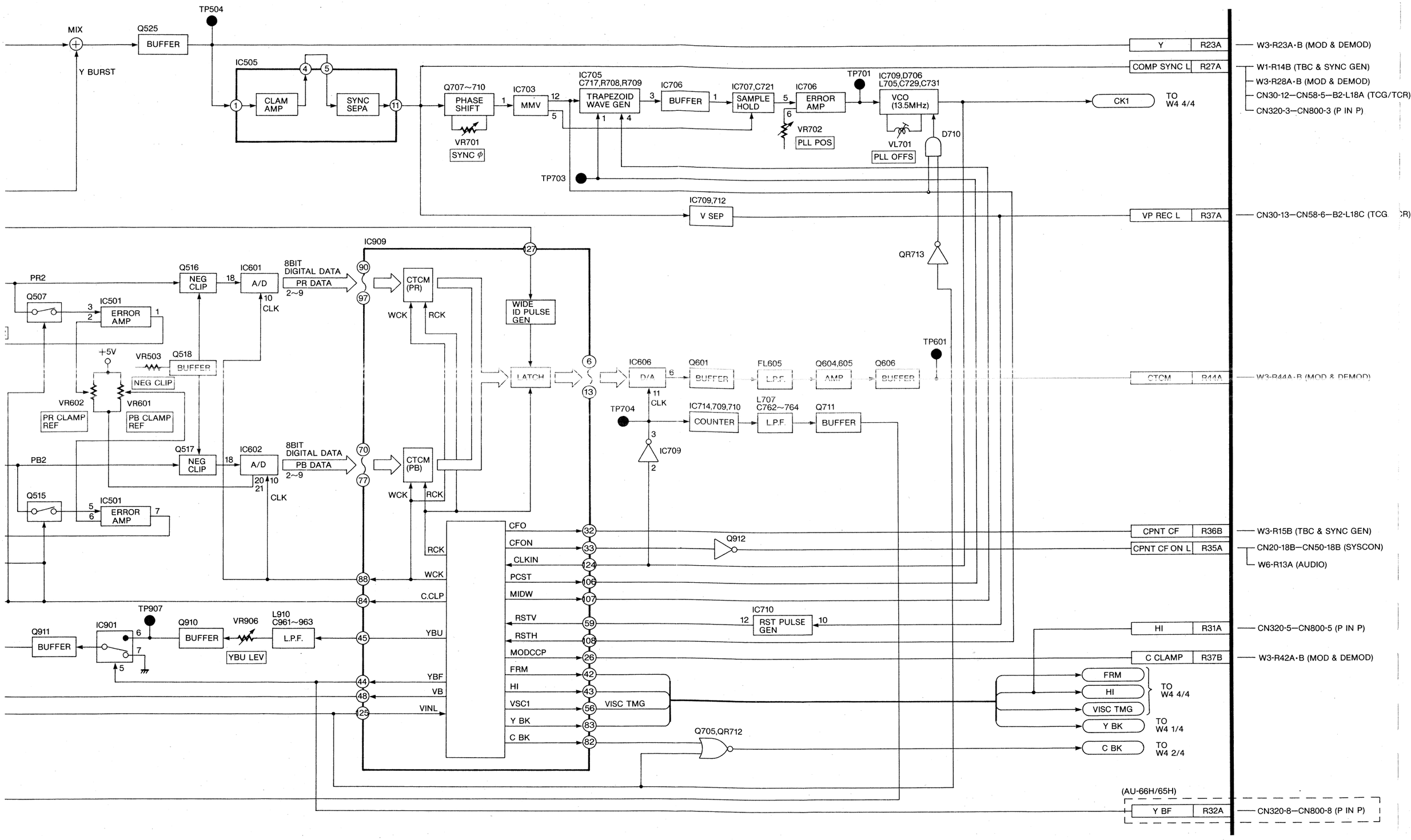
MIX
Y BURST
Q525
BUFFER
TP504
IC505
CLAM AMP
SYNC SEPA
Q707~710
PHASE SHIFT
VR701
SYNC φ
IC703
MMV
IC705
C717,R708,R709
TRAPEZOID WAVE GEN
IC706
BUFFER
IC707,C721
SAMPLE HOLD
IC706
ERROR AMP
VR702
PLL POS
TP701
IC709,D706
L705,C729,C731
VCO (13.5MHz)
VL701
PLL OFFS
D710
TP703
CK1
TO W4 4/4
Y
R23A
W3-R23A·B (MOD & DEMOD)
COMP SYNC L
R27A
W1-R14B (TBC & SYNC GEN)
W3-R28A·B (MOD & DEMOD)
CN30-12—CN58-5—B2-L18A (TCG/TCR)
CN320-3—CN800-3 (P IN P)
IC709,712
V SEP
VP REC L
R37A
CN30-13—CN58-6—B2-L18C (TCG
IC909
QR713
PR2
Q516
NEG CLIP
IC601
A/D
8BIT DIGITAL DATA
PR DATA
2~9
CLK
Q507
IC501
ERROR AMP
+5V
VR503
Q518
BUFFER
NEG CLIP
VR602
PR CLAMP REF
VR601
PB CLAMP REF
CTCM (PR)
WCK
RCK
WIDE ID PULSE GEN
LATCH
IC606
D/A
Q601
BUFFER
FL605
L.P.F.
Q604,605
AMP
Q606
BUFFER
TP601
CTCM
R44A
W3-R44A·B (MOD & DEMOD)
TP704
IC714,709,710
COUNTER
L707
C762~764
L.P.F.
Q711
BUFFER
IC709
PB2
Q517
NEG CLIP
IC602
A/D
8BIT DIGITAL DATA
PB DATA
2~9
CLK
Q515
IC501
ERROR AMP
CTCM (PB)
WCK
RCK
CFO
CFON
CLKIN
PCST
MIDW
RSTV
RSTH
MODCCP
FRM
HI
VSC1
Y BK
C BK
VISC TMG
Q912
IC710
RST PULSE GEN
Q705,QR712
CPNT CF
R36B
W3-R15B (TBC & SYNC GEN)
CPNT CF ON L
R35A
CN20-18B—CN50-18B (SYSCON)
W6-R13A (AUDIO)
HI
R31A
CN320-5—CN800-5 (P IN P)
C CLAMP
R37B
W3-R42A·B (MOD & DEMOD)
FRM
HI
VISC TMG
TO W4 4/4
Y BK
TO W4 1/4
C BK
TO W4 2/4
TP907
Q911
BUFFER
IC901
Q910
BUFFER
VR906
YBU LEV
L910
C961~963
L.P.F.
RCK
WCK
C.CLP
YBU
YBF
VB
VINL
(AU-66H/65H)
Y BF
R32A
CN320-8—CN800-8 (P IN P)

W4 (DEC & CTCM) BLOCK DIAGRAM (4/4)

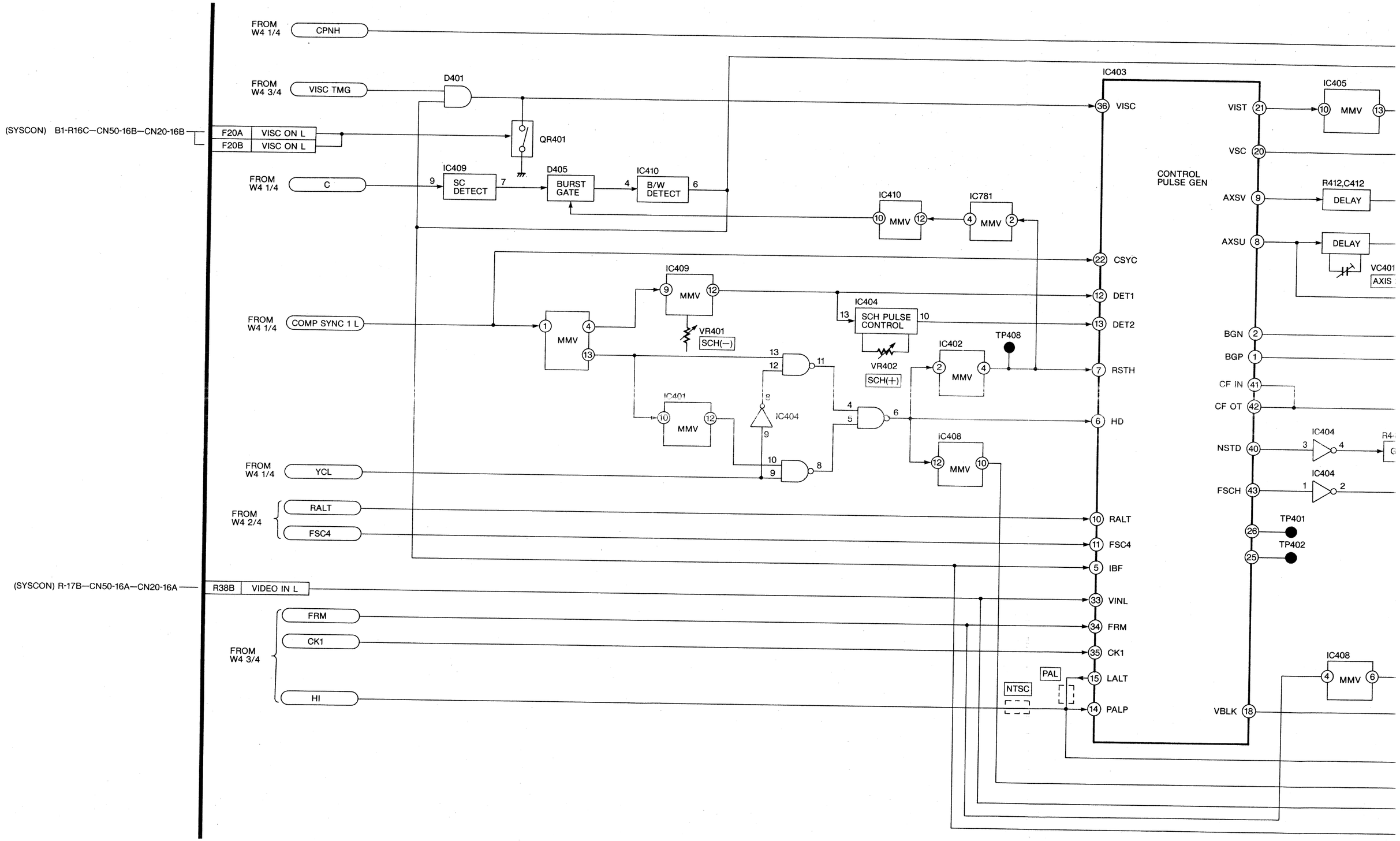

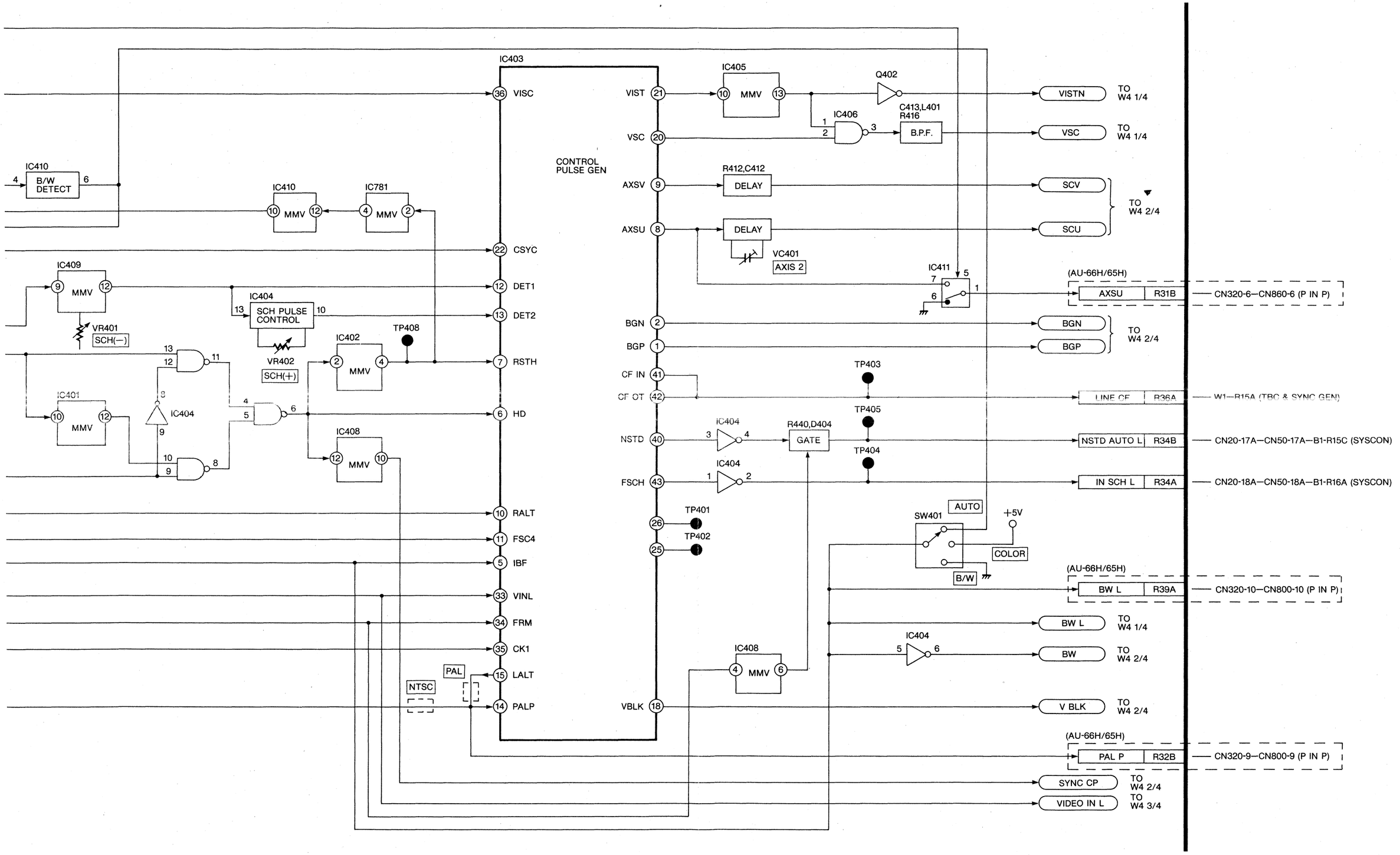
IC403
CONTROL PULSE GEN
IC410
B/W DETECT
IC410
MMV
IC781
MMV
IC409
MMV
VR401
SCH(—)
IC404
SCH PULSE CONTROL
VR402
SCH(+)
IC402
MMV
TP408
IC401
MMV
IC404
IC408
MMV
NTSC
PAL
IC405
MMV
Q402
IC406
C413,L401
R416
B.P.F.
R412,C412
DELAY
DELAY
VC401
AXIS 2
IC411
IC404
R440,D404
GATE
IC404
IC408
MMV
TP403
TP405
TP404
TP401
TP402
SW401
AUTO
+5V
COLOR
B/W
VISC
CSYC
DET1
DET2
RSTH
HD
RALT
FSC4
IBF
VINL
FRM
CK1
LALT
PALP
VIST
VSC
AXSV
AXSU
BGN
BGP
CF IN
CF OT
NSTD
FSCH
VBLK
VISTN
VSC
SCV
SCU
BGN
BGP
LINE CF
NSTD AUTO L
IN SCH L
BW L
BW
V BLK
PAL P
SYNC CP
VIDEO IN L
TO W4 1/4
TO W4 2/4
TO W4 3/4
(AU-66H/65H)
AXSU R31B
CN320-6—CN860-6 (P IN P)
W1—R15A (TBC & SYNC GEN)
NSTD AUTO L R34B
CN20-17A—CN50-17A—B1-R15C (SYSCON)
IN SCH L R34A
CN20-18A—CN50-18A—B1-R16A (SYSCON)
BW L R39A
CN320-10—CN800-10 (P IN P)
PAL P R32B
CN320-9—CN800-9 (P IN P)

W4 (DEC & CTCM) SCHEMATIC DIAGRAM (1/5)

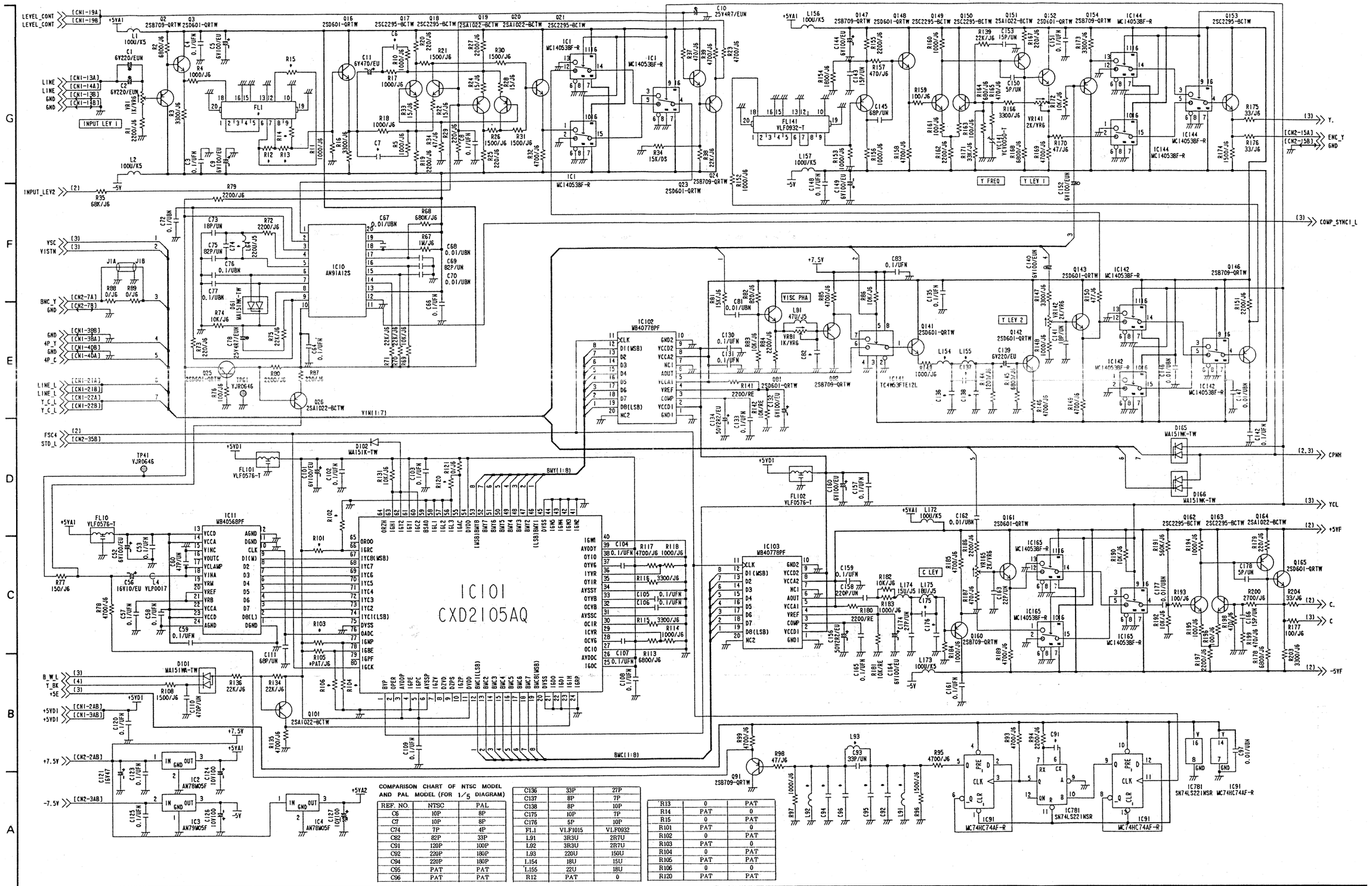

REF. NO.	NTSC	PAL
C6	10P	8P
C7	10P	8P
C74	7P	4P
C82	82P	33P
C91	120P	100P
C92	220P	180P
C94	220P	180P
C95	PAT	PAT
C96	PAT	PAT

C136	33P	27P
C137	8P	7P
C138	8P	10P
C175	10P	7P
C176	5P	10P
FL1	VLF1015	VLF0932
L91	3R3U	2R7U
L92	3R3U	2R7U
L93	220U	150U
L154	18U	15U
L155	22U	18U
R12	PAT	0

R13	0	PAT
R14	PAT	0
R15	0	PAT
R101	PAT	0
R102	0	PAT
R103	PAT	0
R104	0	PAT
R105	PAT	PAT
R106	0	0
R120	PAT	PAT

2—5

2—5

W4 (DEC & CTCM) SCHEMATIC DIAGRAM (2/5)

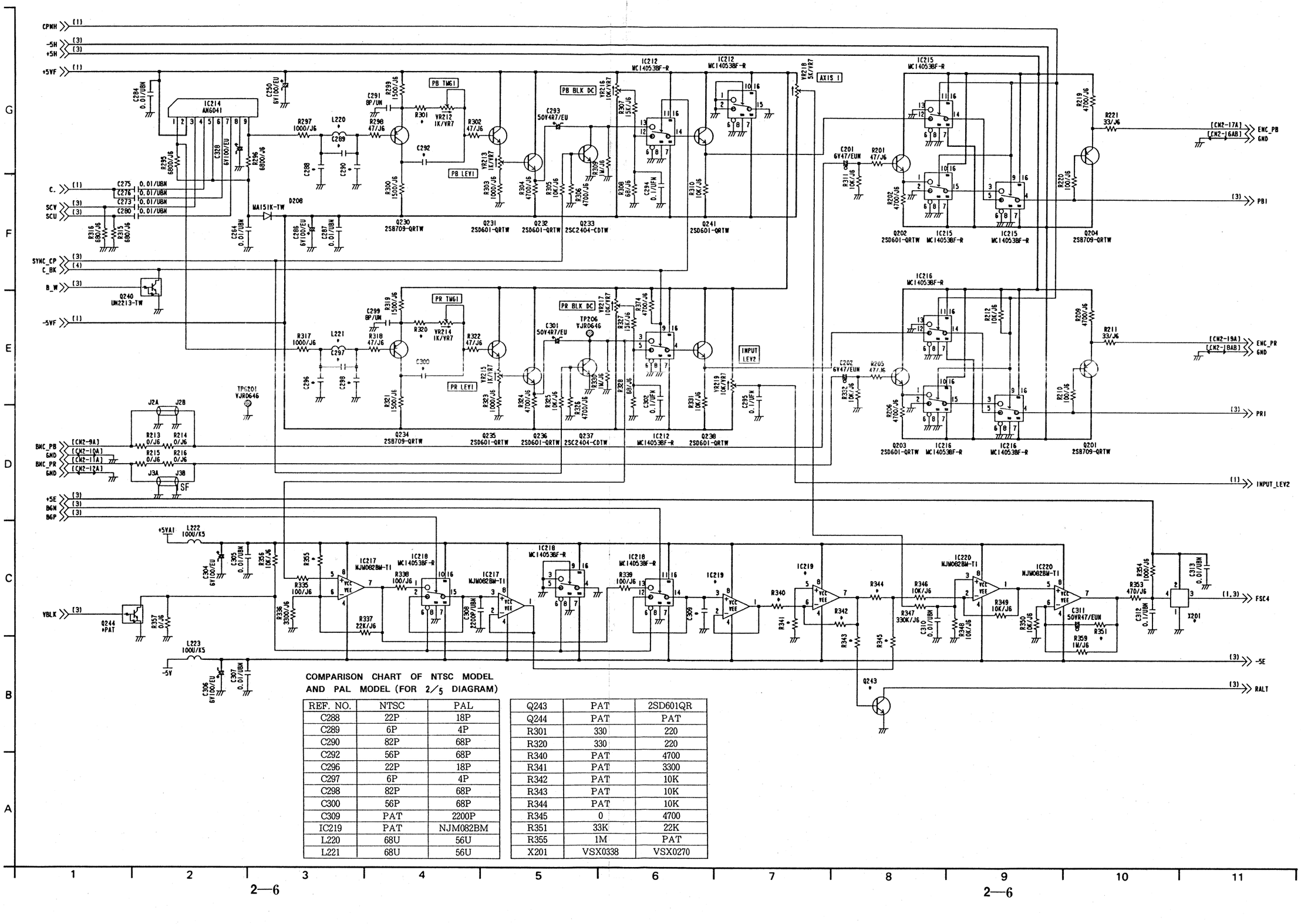

COMPARISON CHART OF NTSC MODEL AND PAL MODEL (FOR 2/5 DIAGRAM)

REF. NO.	NTSC	PAL
C288	22P	18P
C289	6P	4P
C290	82P	68P
C292	56P	68P
C296	22P	18P
C297	6P	4P
C298	82P	68P
C300	56P	68P
C309	PAT	2200P
IC219	PAT	NJM082BM
L220	68U	56U
L221	68U	56U

Q243	PAT	2SD601QR
Q244	PAT	PAT
R301	330	220
R320	330	220
R340	PAT	4700
R341	PAT	3300
R342	PAT	10K
R343	PAT	10K
R344	PAT	10K
R345	0	4700
R351	33K	22K
R355	1M	PAT
X201	VSX0338	VSX0270

W4 (DEC & CTCM) SCHEMATIC DIAGRAM (3/5)

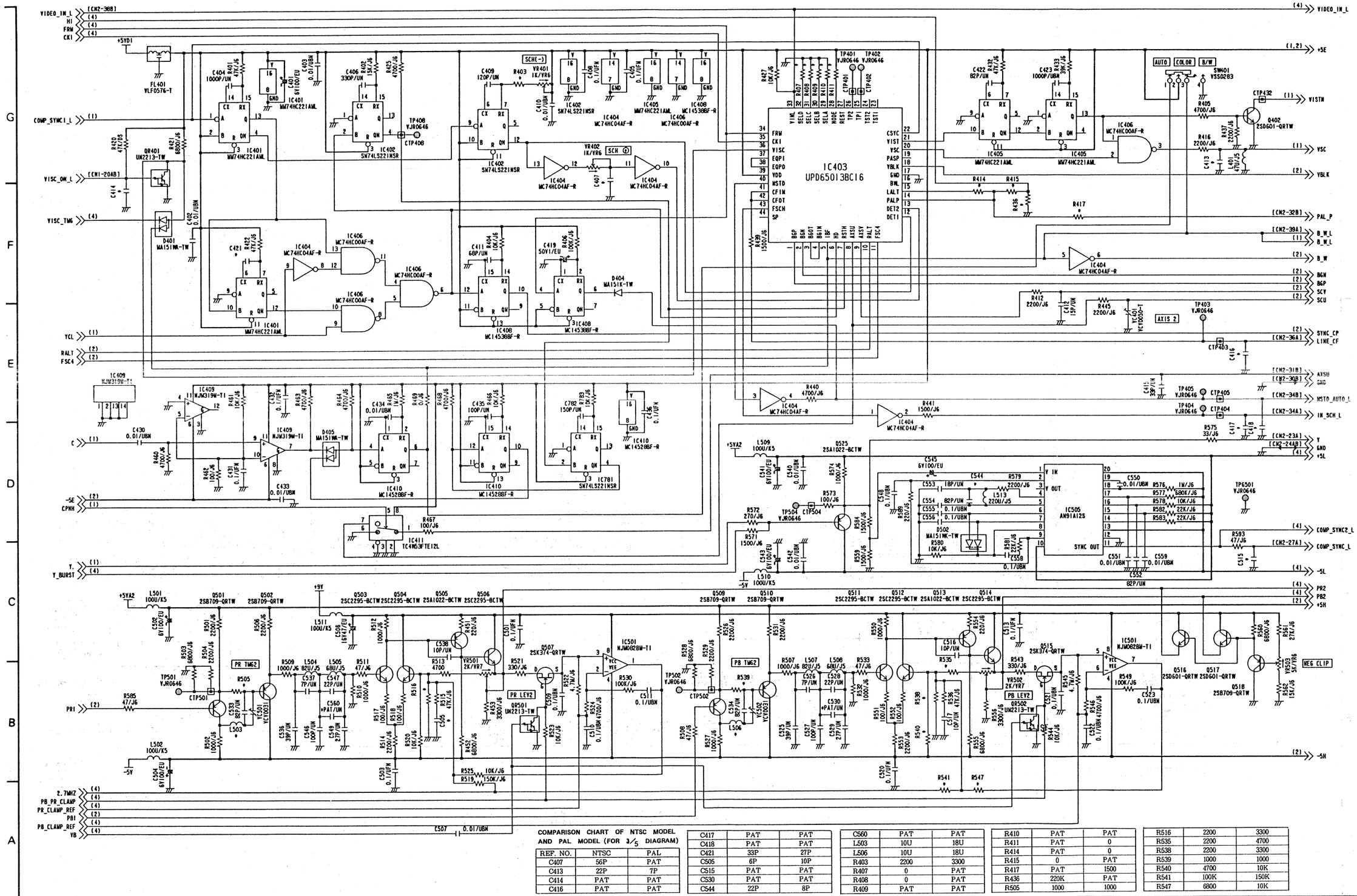

REF. NO.	NTSC	PAL
C407	56P	PAT
C413	22P	7P
C414	PAT	PAT
C416	PAT	PAT
C417	PAT	PAT
C418	PAT	PAT
C421	33P	27P
C505	6P	10P
C515	PAT	PAT
C530	PAT	PAT
C544	22P	8P
C560	PAT	PAT *
L503	10U	18U
L506	10U	18U
R403	2200	3300
R407	0	PAT
R408	0	PAT
R409	PAT	PAT
R410	PAT	PAT
R411	PAT	0
R414	PAT	0
R415	0	PAT
R417	PAT	1500
R436	220K	PAT
R505	1000	1000
R516	2200	3300
R535	2200	4700
R538	2200	3300
R539	1000	1000
R540	4700	10K
R541	100K	150K
R547	6800	10K

W4 (DEC & CTCM) SCHEMATIC DIAGRAM (4/5)

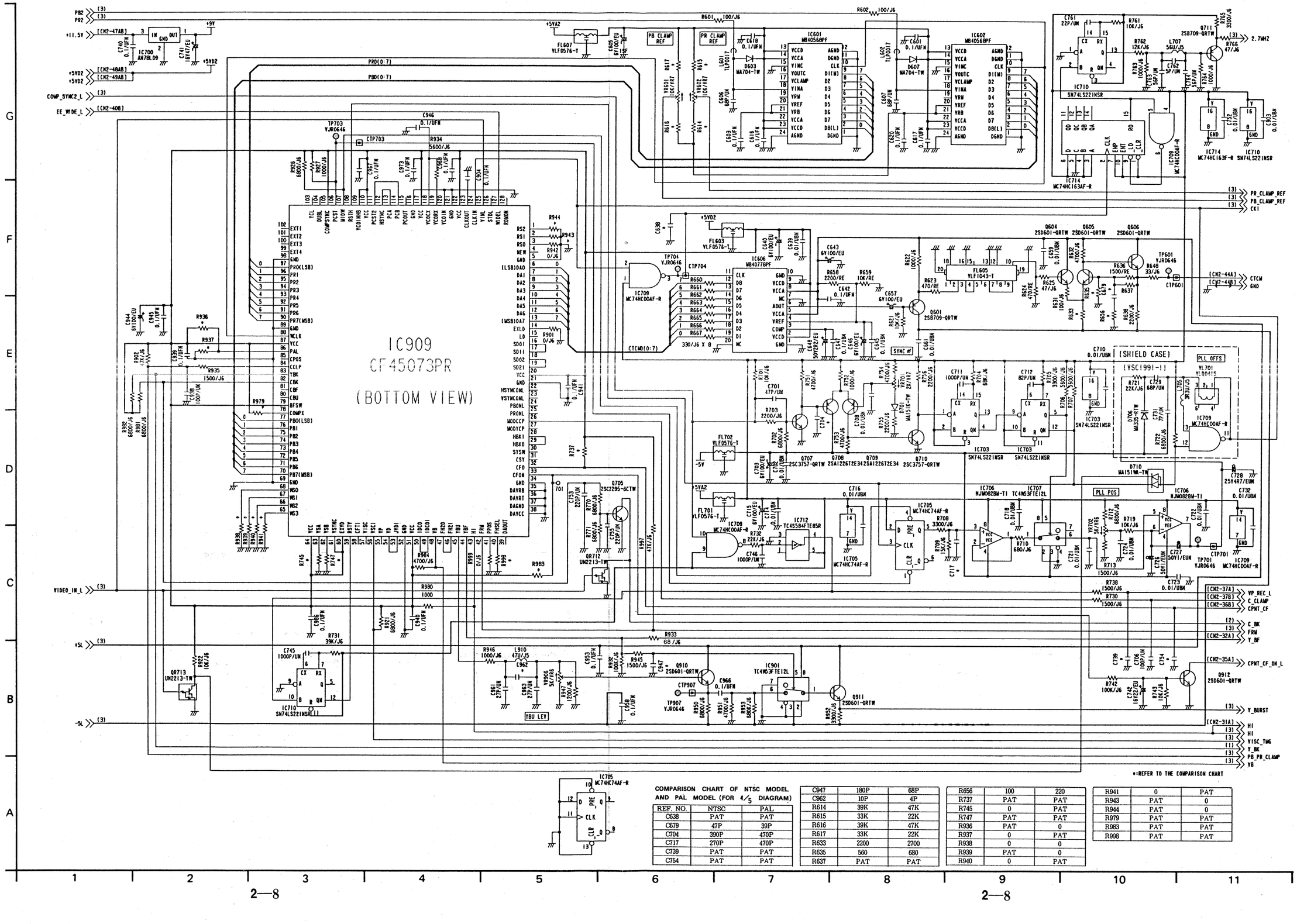

COMPARISON CHART OF NTSC MODEL AND PAL MODEL (FOR 4/5 DIAGRAM)

REF. NO.	NTSC	PAL
C638	PAT	PAT
C679	47P	39P
C704	390P	470P
C717	270P	470P
C739	PAT	PAT
C754	PAT	PAT

C947	180P	68P
C962	10P	4P
R614	39K	47K
R615	33K	22K
R616	39K	47K
R617	33K	22K
R633	2200	2700
R635	560	680
R637	PAT	PAT

R656	100	220
R737	PAT	PAT
R745	0	PAT
R747	PAT	PAT
R936	PAT	0
R937	0	PAT
R938	0	0
R939	PAT	0
R940	0	PAT

R941	0	PAT
R943	PAT	0
R944	PAT	0
R979	PAT	PAT
R983	PAT	PAT
R998	PAT	PAT

2—8

W4 (DEC & CTCM) SCHEMATIC DIAGRAM (5/5)

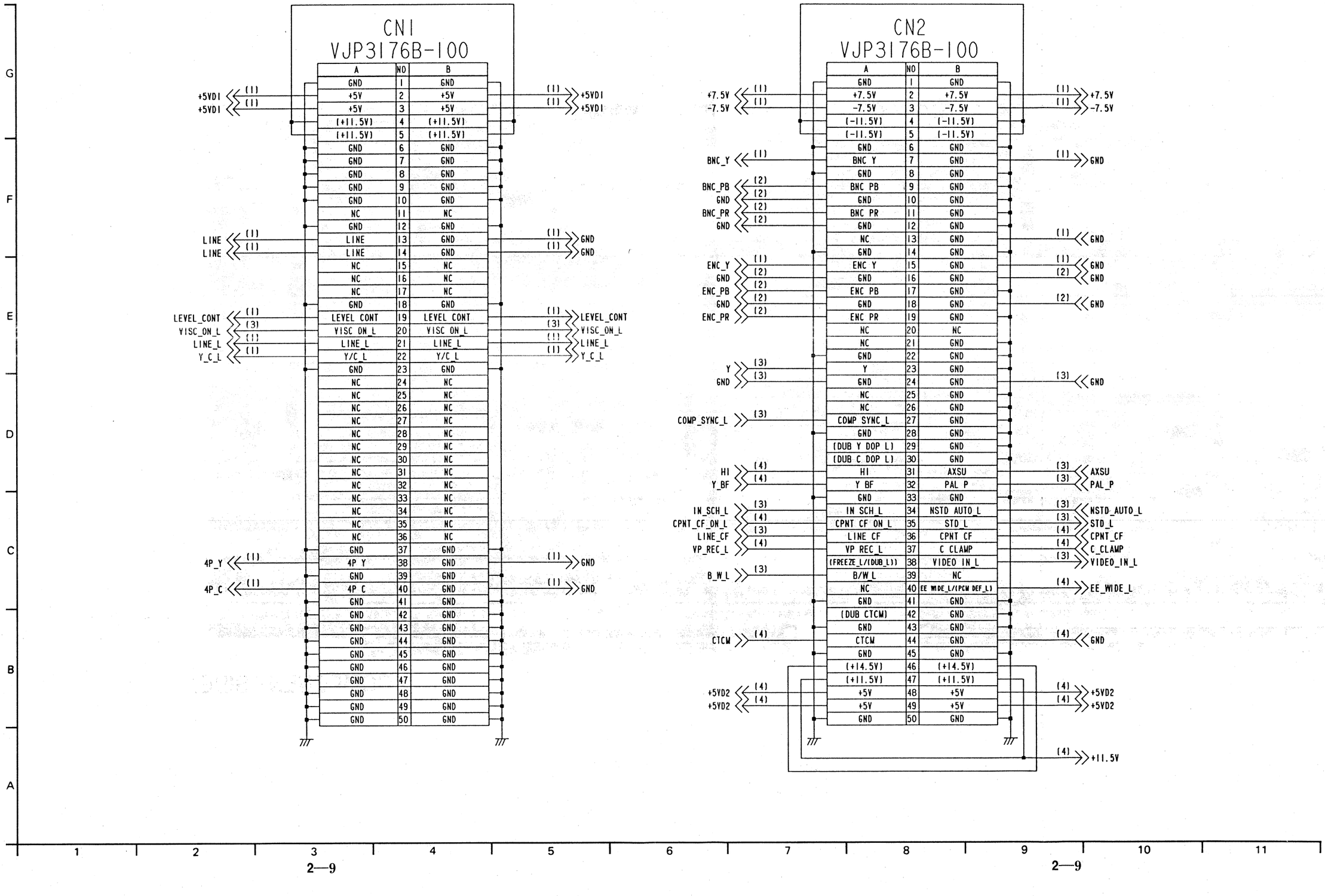

2—9

W4 (DEC&CTCM) P.C.BOARD (VEP83199A) FOR [NTSC]
(VEP83199B) FOR [PAL]

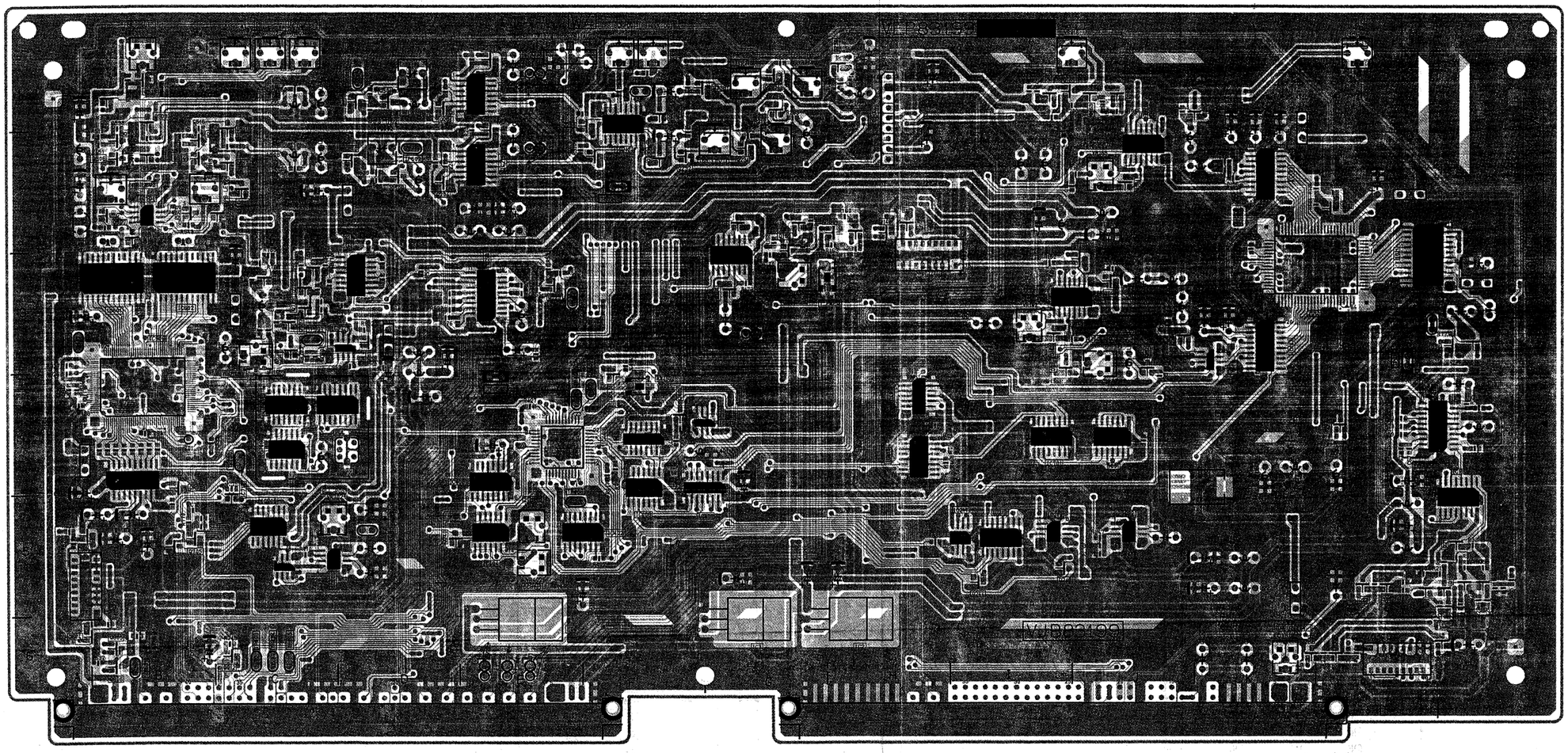

(COMPONENT SIDE)

DECODER & CTCM P.C.BOARD

TRANSISTOR	
Q2	K-6
Q3	L-6
Q16	M-6
Q17	L-5
Q18	M-5
Q19	M-5
Q20	M-5
Q21	M-5
Q23	L-5
Q24	L-5
Q25	M-3
Q26	M-3
Q81	J-3
Q82	J-3
Q91	L-4
Q101	J-2
Q141	J-3
Q142	J-3
Q143	J-3
Q146	J-3
Q147	H-2
Q148	H-2
Q149	H-2
Q150	H-2
Q151	G-2
Q152	G-2
Q153	G-2
Q154	G-3
Q160	K-1
Q161	J-2
Q162	J-1
Q163	J-1
Q164	I-1
Q165	I-1
Q201	D-1
Q202	E-1
Q203	E-1
Q204	D-2
Q230	D-1
Q231	G-2
Q232	F-2
Q233	F-2
Q234	H-1
Q235	G-1
Q236	G-1
Q237	F-1
Q238	F-1
Q240	D-5
Q241	F-2
Q243	I-5
Q244	I-5
Q402	F-4
Q501	D-1
Q502	D-1
Q503	B-1
Q504	B-2
Q505	B-2
Q506	B-2
Q507	B-2
Q509	D-2
Q510	D-2
Q511	C-1
Q512	C-2
Q513	B-2
Q514	B-2
Q515	B-2
Q516	B-1
Q517	C-2
Q518	B-1
Q525	E-3
Q601	A-5
Q604	A-6
Q605	B-6
Q606	B-6
Q605	B-5
Q607	C-3
Q608	C-3
Q609	C-3
Q610	C-3
Q611	C-3
Q910	D-3
Q911	D-3
Q912	C-6
QR401	F-4
QR501	B-2
QR502	C-2
QR712	B-5
QR713	B-4

INTEGRATED CIRCUIT	
IC1	M-5
IC2	H-6
IC3	G-6
IC4	E-6
IC10	M-4
IC11	L-3
IC91	J-4
IC101	L-3
IC102	K-3
IC103	K-2
IC141	K-3
IC142	J-3
IC144	G-3
IC165	J-2
IC212	F-1
IC214	H-1
IC215	E-2
IC216	E-1
IC217	I-5
IC218	I-5
IC219	I-5
IC220	J-5
IC401	G-5
IC402	F-5
IC403	E-4
IC404	E-5
IC405	F-4
IC406	E-4
IC408	E-4
IC409	H-4
IC410	H-4
IC411	G-4
IC501	B-2
IC505	E-3
IC601	B-3
IC602	B-3
IC606	B-4
IC700	A-2
IC703	D-3
IC705	C-5
IC706	C-5
IC707	C-5
IC709	C-4
IC710	C-4
IC712	C-5
IC714	D-4
IC781	I-4
IC901	D-3
IC909	B-4

TEST POINT	
TP41	L-3
TP206	F-1
TP401	E-4
TP402	F-4
TP403	C-6
TP404	C-6
TP405	C-6
TP408	E-5
TP501	D-1
TP502	D-2
TP504	E-3
TP601	B-6
TP701	D-5
TP703	A-3
TP704	C-4
TP907	C-3
TPG1	L-3
TPG201	F-2
TPG501	E-4

ADJUSTMENT	
VR1	K-6
VR81	J-3
VR141	G-3
VR142	I-3
VR165	J-2
VR212	G-2
VR213	G-2
VR214	G-1
VR215	G-1
VR216	F-1
VR217	F-1
VR218	J-1
VR219	L-1
VR401	E-5
VR402	E-5
VR501	B-2
VR502	B-2
VR503	B-1
VR601	C-1
VR602	C-1
VR701	C-1
VR702	C-5
VR906	C-3
VC141	H-3
VC401	F-4
VC501	D-1
VC502	D-2

CONNECTOR	
CN1	I-6
CN2	C-6

ADDRESS INFORMATION

2—10

CHIP PART INFORMATION

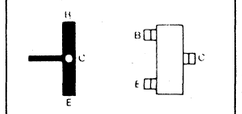

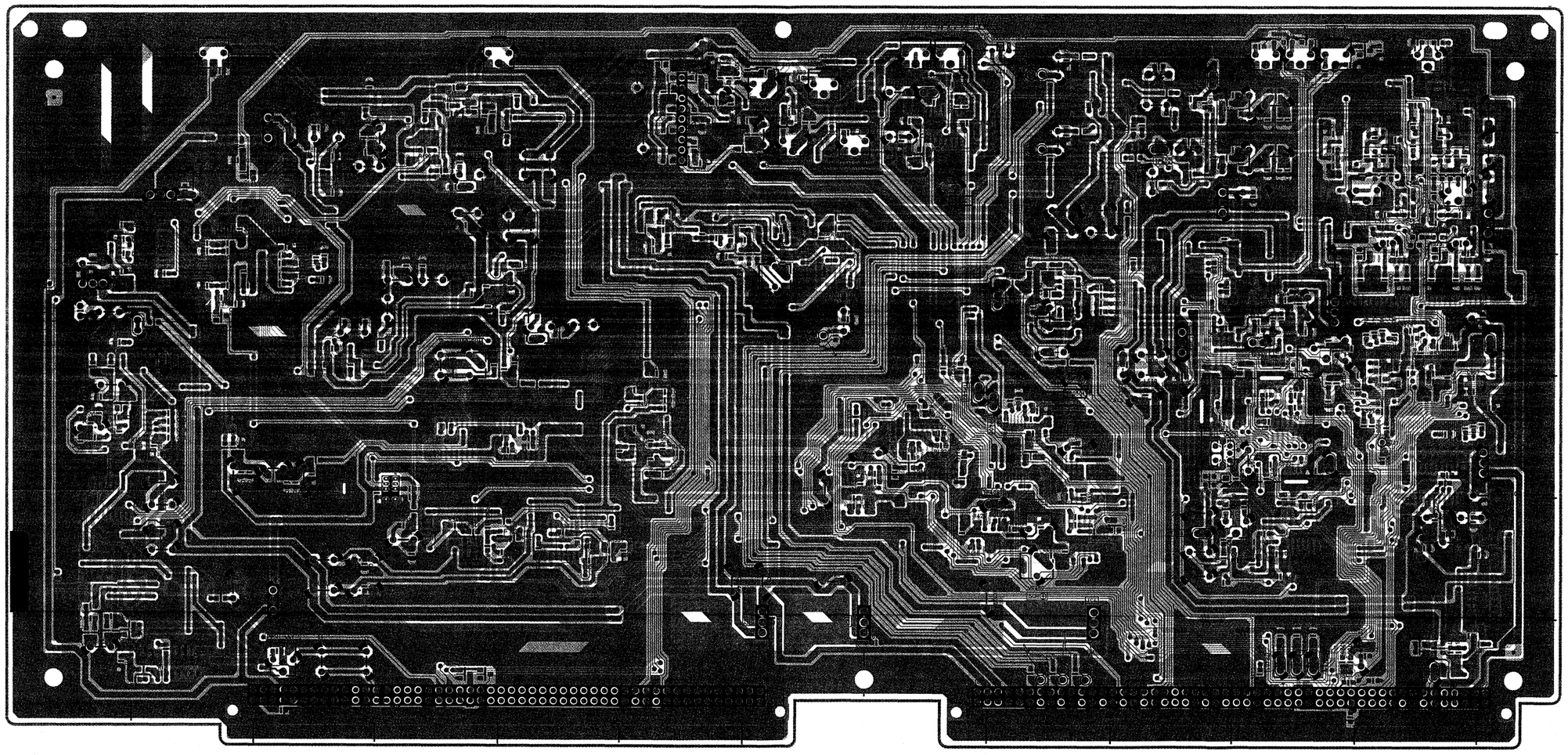

(FOIL SIDE)

2—11

(BACK SIDE)

Ref.No.	Part No.	Part Name & Description	Pcs	Remarks
	VEP83199B	P.C.BOARD W/COMPONENT	1	(RTL)<R>
		W4 DEC & CTCM		
		CAPACITORS		
C1,C2	ECEA0JN221S	E.CAPACITOR 6.3V 220U	2	
C3,C4	ECUM1E104ZFN	C.CAPACITOR CH 25V 0.1U	2	
C5	ECEA0JU101	E.CAPACITOR 6.3V 100U	1	
C6,C7	ECUM1H080DCN	C.CAPACITOR CH 50V 8P	2	
C8	ECUM1E104ZFN	C.CAPACITOR CH 25V 0.1U	1	
C9	ECEA0JU101	E.CAPACITOR 6.3V 100U	1	
C10	ECEA1EN4R7S	E.CAPACITOR 25V 4.7U	1	
C11	ECEA0JU471	E.CAPACITOR 6.3V 470U	1	
C52	ECEA0JU101	E.CAPACITOR 6.3V 100U	1	
C53	ECUM1E104ZFN	C.CAPACITOR CH 25V 0.1U	1	
C56	ECEA1CU100	E.CAPACITOR 16V 10U	1	
C57-59	ECUM1E104ZFN	C.CAPACITOR CH 25V 0.1U	3	
C60	ECUM1H470JCN	C.CAPACITOR CH 50V 47P	1	
C64	ECUM1E104ZFN	C.CAPACITOR CH 25V 0.1U	1	
C66	ECUM1E104ZFN	C.CAPACITOR CH 25V 0.1U	1	
C67,68	ECUM1H103KBN	C.CAPACITOR CH 50V 0.01U	2	
C69	ECUM1H820JCN	C.CAPACITOR CH 50V 82P	1	
C70	ECUM1H103KBN	C.CAPACITOR CH 50V 0.01U	1	
C72	ECUM1E104KBN	C.CAPACITOR CH 25V 0.1U	1	
C73	ECUM1H180JCN	C.CAPACITOR CH 50V 18P	1	
C74	ECUM1H040DCN	C.CAPACITOR CH 50V 4P	1	
C75	ECUM1H820JCN	C.CAPACITOR CH 50V 82P	1	
C76,77	ECUM1E104KBN	C.CAPACITOR CH 25V 0.1U	2	
C78	ECEA1EN4R7S	E.CAPACITOR 25V 4.7U	1	
C81	ECUM1H103KBN	C.CAPACITOR CH 50V 0.01U	1	
C82	ECUM1H330JCN	C.CAPACITOR CH 50V 33P	1	
C83	ECUM1E104ZFN	C.CAPACITOR CH 25V 0.1U	1	
C91	ECUM1H101JCN	C.CAPACITOR CH 50V 100P	1	
C92	ECUM1H181JCN	C.CAPACITOR CH 50V 180P	1	
C93	ECUM1H330JCN	C.CAPACITOR CH 50V 33P	1	
C94	ECUM1H181JCN	C.CAPACITOR CH 50V 180P	1	
C97	ECUM1H103KBN	C.CAPACITOR CH 50V 0.01U	1	
C101	ECEA0JU101	E.CAPACITOR 6.3V 100U	1	
C102-09	ECUM1E104ZFN	C.CAPACITOR CH 25V 0.1U	8	
C110	ECUM1H471JCN	C.CAPACITOR CH 50V 470P	1	
C111	ECUM1H680JCN	C.CAPACITOR CH 50V 68P	1	
C120	ECUM1E104ZFN	C.CAPACITOR CH 25V 0.1U	1	
C121	ECEA1CGE470	E.CAPACITOR 16V 47U	1	
C123	ECUM1E104ZFN	C.CAPACITOR CH 25V 0.1U	1	
C124	ECEA1AGE101	E.CAPACITOR 10V 100U	1	
C125	ECUM1E104ZFN	C.CAPACITOR CH 25V 0.1U	1	
C126,27	ECEA1AGE101	E.CAPACITOR 10V 100U	2	
C130,31	ECUM1E104ZFN	C.CAPACITOR CH 25V 0.1U	2	
C132	ECEA0JU101	E.CAPACITOR 6.3V 100U	1	
C133	ECUM1E104ZFN	C.CAPACITOR CH 25V 0.1U	1	
C134	ECEA1HU2R2	E.CAPACITOR 50V 2.2U	1	
C135	ECUM1E104ZFN	C.CAPACITOR CH 25V 0.1U	1	
C136	ECUM1H270JCN	C.CAPACITOR CH 50V 27P	1	
C137	ECUM1H070DCN	C.CAPACITOR CH 50V 7P	1	
C138	ECUM1H100DCN	C.CAPACITOR CH 50V 10P	1	
C139	ECEA0JU221	E.CAPACITOR 6.3V 220U	1	
C140	ECEA0JN101S	E.CAPACITOR 6.3V 100U	1	
C141	ECUM1H180JCN	C.CAPACITOR CH 50V 18P	1	
C142	ECUM1E104ZFN	C.CAPACITOR CH 25V 0.1U	1	
C143	ECUM1H150JCN	C.CAPACITOR CH 50V 15P	1	
C144	ECEA0JU101	E.CAPACITOR 6.3V 100U	1	
C145	ECUM1H680JCN	C.CAPACITOR CH 50V 68P	1	
C146,47	ECUM1H103KBN	C.CAPACITOR CH 50V 0.01U	2	
C148	ECUM1E104ZFN	C.CAPACITOR CH 25V 0.1U	1	
C149	ECEA0JU101	E.CAPACITOR 6.3V 100U	1	
C150	ECUM1H050DCN	C.CAPACITOR CH 50V 5P	1	
C151	ECUM1E104ZFN	C.CAPACITOR CH 25V 0.1U	1	
C152	ECEA0JN101S	E.CAPACITOR 6.3V 100U	1	
C153	ECUM1H150JCN	C.CAPACITOR CH 50V 15P	1	
C156	ECEA1HU2R2	E.CAPACITOR 50V 2.2U	1	
C157	ECUM1E104ZFN	C.CAPACITOR CH 25V 0.1U	1	
C158	ECUM1H221JCN	C.CAPACITOR CH 50V 220P	1	
C159	ECUM1E104ZFN	C.CAPACITOR CH 25V 0.1U	1	
C160	ECEA0JU101	E.CAPACITOR 6.3V 100U	1	
C161	ECUM1E104ZFN	C.CAPACITOR CH 25V 0.1U	1	
C162	ECUM1H103KBN	C.CAPACITOR CH 50V 0.01U	1	
C163	ECUM1H220JCN	C.CAPACITOR CH 50V 22P	1	
C164	ECEA0JU101	E.CAPACITOR 6.3V 100U	1	
C165	ECUM1E104ZFN	C.CAPACITOR CH 25V 0.1U	1	
C166	ECUM1H150JCN	C.CAPACITOR CH 50V 15P	1	
C174	ECUM1H270JCN	C.CAPACITOR CH 50V 27P	1	
C175	ECUM1H070DCN	C.CAPACITOR CH 50V 7P	1	
C176	ECUM1H100DCN	C.CAPACITOR CH 50V 10P	1	
C177	ECUM1H103KBN	C.CAPACITOR CH 50V 0.01U	1	
C178	ECUM1H050DCN	C.CAPACITOR CH 50V 5P	1	
C201,02	ECEA0JN470S	E.CAPACITOR 6.3V 47U	2	
C250	ECEA0JU101	E.CAPACITOR 6.3V 100U	1	
C264	ECUM1H103KBN	C.CAPACITOR CH 50V 0.01U	1	
C273	ECUM1H103KBN	C.CAPACITOR CH 50V 0.01U	1	
C275,76	ECUM1H103KBN	C.CAPACITOR CH 50V 0.01U	2	
C280	ECUM1H103KBN	C.CAPACITOR CH 50V 0.01U	1	
C284	ECUM1H103KBN	C.CAPACITOR CH 50V 0.01U	1	
C286	ECEA0JU101	E.CAPACITOR 6.3V 100U	1	
C287	ECUM1H103KBN	C.CAPACITOR CH 50V 0.01U	1	
C288	ECUM1H180JCN	C.CAPACITOR CH 50V 18P	1	
C289	ECUM1H040DCN	C.CAPACITOR CH 50V 4P	1	
C290	ECUM1H680JCN	C.CAPACITOR CH 50V 68P	1	
C291	ECUM1H080DCN	C.CAPACITOR CH 50V 8P	1	
C292	ECUM1H680JCN	C.CAPACITOR CH 50V 68P	1	
C293	ECEA1HU4R7	E.CAPACITOR 50V 4.7U	1	
C294,95	ECUM1E104ZFN	C.CAPACITOR CH 25V 0.1U	2	
C296	ECUM1H180JCN	C.CAPACITOR CH 50V 18P	1	
C297	ECUM1H040DCN	C.CAPACITOR CH 50V 4P	1	
C298	ECUM1H680JCN	C.CAPACITOR CH 50V 68P	1	
C299	ECUM1H080DCN	C.CAPACITOR CH 50V 8P	1	
C300	ECUM1H680JCN	C.CAPACITOR CH 50V 68P	1	
C301	ECEA1HU4R7	E.CAPACITOR 50V 4.7U	1	
C302	ECUM1E104ZFN	C.CAPACITOR CH 25V 0.1U	1	
C304	ECEA0JU101	E.CAPACITOR 6.3V 100U	1	
C305	ECUM1H103KBN	C.CAPACITOR CH 50V 0.01U	1	
C306	ECEA0JU101	E.CAPACITOR 6.3V 100U	1	
C307	ECUM1H103KBN	C.CAPACITOR CH 50V 0.01U	1	
C308,09	ECUM1H222KBN	C.CAPACITOR CH 50V 2200P	2	
C310	ECUM1H103KBN	C.CAPACITOR CH 50V 0.01U	1	
C311	ECEA1HNR47S	E.CAPACITOR CH 50V 0.47U	1	
C312	ECUM1E104KBN	C.CAPACITOR CH 25V 0.1U	1	
C313	ECUM1H103KBN	C.CAPACITOR CH 50V 0.01U	1	
C328	ECEA0JU101	E.CAPACITOR 6.3V 100U	1	
C401	ECEA0JU101	E.CAPACITOR 6.3V 100U	1	
C402,03	ECUM1H103KBN	C.CAPACITOR CH 50V 0.01U	2	
C404	ECUM1H102JCN	C.CAPACITOR CH 50V 1000P	1	
C405	ECUM1E104ZFN	C.CAPACITOR CH 25V 0.1U	1	
C406	ECUM1H331JCN	C.CAPACITOR CH 50V 330P	1	
C408	ECUM1E104ZFN	C.CAPACITOR CH 25V 0.1U	1	
C409	ECUM1H121JCN	C.CAPACITOR CH 50V 120P	1	
C410	ECUM1H103KBN	C.CAPACITOR CH 50V 0.01U	1	
C411	ECUM1H680JCN	C.CAPACITOR CH 50V 68P	1	
C412	ECUM1H150JCN	C.CAPACITOR CH 50V 15P	1	
C413	ECUM1H070DCN	C.CAPACITOR CH 50V 7P	1	
C415	ECUM1H330JCN	C.CAPACITOR CH 50V 33P	1	
C419	ECEA1HU010	E.CAPACITOR 50V 1U	1	
C421	ECUM1H270JCN	C.CAPACITOR CH 50V 27P	1	
C422	ECUM1H820JCN	C.CAPACITOR CH 50V 82P	1	
C423	ECUM1H102KBN	C.CAPACITOR CH 50V 1000P	1	
C430	ECUM1H103KBN	C.CAPACITOR CH 50V 0.01U	1	
C431,32	ECUM1E104ZFN	C.CAPACITOR CH 25V 0.1U	2	
C433,34	ECUM1H103KBN	C.CAPACITOR CH 50V 0.01U	2	
C435	ECUM1H101JCN	C.CAPACITOR CH 50V 100P	1	
C436	ECUM1E104ZFN	C.CAPACITOR CH 25V 0.1U	1	
C501	ECUM1E104ZFN	C.CAPACITOR CH 25V 0.1U	1	
C502	ECEA0JU101	E.CAPACITOR 6.3V 100U	1	
C503	ECUM1E104ZFN	C.CAPACITOR CH 25V 0.1U	1	
C504	ECEA0JU101	E.CAPACITOR 6.3V 100U	1	
C505	ECUM1H100DCN	C.CAPACITOR CH 50V 10P	1	
C506	ECEA1CU470	E.CAPACITOR 16V 47U	1	
C507	ECUM1H103KBN	C.CAPACITOR CH 50V 0.01U	1	

Ref.No.	Part No.	Part Name & Description	Pcs	Remarks
C509-11	ECUM1E104KBN	C.CAPACITOR CH 25V 0.1U	3	
C513	ECUM1E104ZFN	C.CAPACITOR CH 25V 0.1U	1	
C516,17	ECUM1H100DCN	C.CAPACITOR CH 50V 10P	2	
C520	ECUM1E104ZFN	C.CAPACITOR CH 25V 0.1U	1	
C521-23	ECUM1E104KBN	C.CAPACITOR CH 25V 0.1U	3	
C525	ECUM1H390JCN	C.CAPACITOR CH 50V 39P	1	
C526	ECUM1H070DCN	C.CAPACITOR CH 50V 7P	1	
C527	ECUM1H101JCN	C.CAPACITOR CH 50V 100P	1	
C528	ECUM1H220JCN	C.CAPACITOR CH 50V 22P	1	
C529	ECUM1H270JCN	C.CAPACITOR CH 50V 27P	1	
C533,34	ECUM1H820JCN	C.CAPACITOR CH 50V 82P	2	
C536	ECUM1H390JCN	C.CAPACITOR CH 50V 39P	1	
C537	ECUM1H070DCN	C.CAPACITOR CH 50V 7P	1	
C538	ECUM1H100DCN	C.CAPACITOR CH 50V 10P	1	
C540	ECUM1H103KBN	C.CAPACITOR CH 50V 0.01U	1	
C541	ECEA0JU101	E.CAPACITOR 6.3V 100U	1	
C542	ECUM1H103KBN	C.CAPACITOR CH 50V 0.01U	1	
C543	ECEA0JU101	E.CAPACITOR 6.3V 100U	1	
C544	ECUM1H080DCN	C.CAPACITOR CH 50V 8P	1	
C545	ECEA0JU101	E.CAPACITOR 6.3V 100U	1	
C546	ECUM1H101JCN	C.CAPACITOR CH 50V 100P	1	
C547	ECUM1H220JCN	C.CAPACITOR CH 50V 22P	1	
C548	ECUM1E104KBN	C.CAPACITOR CH 25V 0.1U	1	
C549	ECUM1H270JCN	C.CAPACITOR CH 50V 27P	1	
C550,51	ECUM1H103KBN	C.CAPACITOR CH 50V 0.01U	2	
C552	ECUM1H820JCN	C.CAPACITOR CH 50V 82P	1	
C553	ECUM1H180JCN	C.CAPACITOR CH 50V 18P	1	
C554	ECUM1H820JCN	C.CAPACITOR CH 50V 82P	1	
C555,56	ECUM1E104KBN	C.CAPACITOR CH 25V 0.1U	2	
C558	ECUM1E104KBN	C.CAPACITOR CH 25V 0.1U	1	
C559	ECUM1H103KBN	C.CAPACITOR CH 50V 0.01U	1	
C601	ECUM1E104ZFN	C.CAPACITOR CH 25V 0.1U	1	
C603	ECUM1E104ZFN	C.CAPACITOR CH 25V 0.1U	1	
C605	ECEA0JU101	E.CAPACITOR 6.3V 100U	1	
C606,07	ECUM1H680JCN	C.CAPACITOR CH 50V 68P	2	
C616-18	ECUM1E104ZFN	C.CAPACITOR CH 25V 0.1U	3	
C620	ECUM1E104ZFN	C.CAPACITOR CH 25V 0.1U	1	
C639	ECUM1H103KBN	C.CAPACITOR CH 50V 0.01U	1	
C640	ECEA0JU101	E.CAPACITOR 6.3V 100U	1	
C642	ECUM1E104ZFN	C.CAPACITOR CH 25V 0.1U	1	
C643	ECEA0JU101	E.CAPACITOR 6.3V 100U	1	
C645	ECUM1E104KBN	C.CAPACITOR CH 25V 0.1U	1	
C646	ECEA0JU101	E.CAPACITOR 6.3V 100U	1	
C647	ECUM1E104KBN	C.CAPACITOR CH 25V 0.1U	1	
C648	ECEA1HU2R2	E.CAPACITOR 50V 2.2U	1	
C657	ECEA0JU101	E.CAPACITOR 6.3V 100U	1	
C659	ECUM1H103KBN	C.CAPACITOR CH 50V 0.01U	1	
C661	ECUM1H103KBN	C.CAPACITOR CH 50V 0.01U	1	
C679	ECUM1H390JCN	C.CAPACITOR CH 50V 39P	1	
C701	ECUM1H470JCN	C.CAPACITOR CH 50V 47P	1	
C702	ECUM1H103KBN	C.CAPACITOR CH 50V 0.01U	1	
C703	ECEA0JU101	E.CAPACITOR 6.3V 100U	1	
C704	ECUM1H471JCN	C.CAPACITOR CH 50V 470P	1	
C706	ECUM1H101JCN	C.CAPACITOR CH 50V 100P	1	
C708	ECUM1H103KBN	C.CAPACITOR CH 50V 0.01U	1	
C710	ECUM1H103KBN	C.CAPACITOR CH 50V 0.01U	1	
C711	ECUM1H102JCN	C.CAPACITOR CH 50V 1000P	1	
C712	ECUM1H820JCN	C.CAPACITOR CH 50V 68P	1	
C714	ECUM1H103KBN	C.CAPACITOR CH 50V 0.01U	1	
C715	ECEA0JU101	E.CAPACITOR 6.3V 100U	1	
C716	ECUM1H103KBN	C.CAPACITOR CH 50V 0.01U	1	
C717	ECUM1H471JCN	C.CAPACITOR CH 50V 470P	1	
C718	ECUM1H103KBN	C.CAPACITOR CH 50V 0.01U	1	
C721-24	ECUM1H103KBN	C.CAPACITOR CH 50V 0.01U	4	
C726,27	ECEA1HN010SB	E.CAPACITOR 50V 1U	2	
C728	ECEA1EN4R7SB	E.CAPACITOR 25V 4.7U	1	
C729	ECUM1H680JCN	C.CAPACITOR CH 50V 68P	1	
C731	ECUM1H070DCN	C.CAPACITOR CH 50V 7P	1	
C732	ECUM1H103KBN	C.CAPACITOR CH 50V 0.01U	1	
C740	ECUM1E104ZFN	C.CAPACITOR CH 25V 0.1U	1	
C741	ECEA1CU470	E.CAPACITOR 16V 47U	1	
C742	ECEA1CU220	E.CAPACITOR 16V 22U	1	
C745,46	ECUM1H102JCN	C.CAPACITOR CH 50V 1000P	2	
C752	ECUM1H103KBN	C.CAPACITOR CH 50V 0.01U	1	
C753	ECUM1H221JCN	C.CAPACITOR CH 50V 220P	1	
C755	ECUM1H221JCN	C.CAPACITOR CH 50V 220P	1	
C761	ECUM1H220JCN	C.CAPACITOR CH 50V 22P	1	
C762	ECUM1H050DCN	C.CAPACITOR CH 50V 5P	1	
C763,64	ECUM1H560JCN	C.CAPACITOR CH 50V 56P	2	
C782	ECUM1H151JCN	C.CAPACITOR CH 50V 150P	1	
C903	ECUM1H103KBN	C.CAPACITOR CH 50V 0.01U	1	
C904	ECUM1E104ZFN	C.CAPACITOR CH 25V 0.1U	1	
C938	ECUM1H101JCN	C.CAPACITOR CH 50V 100P	1	
C939-41	ECUM1E104ZFN	C.CAPACITOR CH 25V 0.1U	3	
C944	ECEA0JU101	E.CAPACITOR 6.3V 100U	1	
C945,46	ECUM1E104ZFN	C.CAPACITOR CH 25V 0.1U	2	
C947	ECUM1H680JCN	C.CAPACITOR CH 50V 68P	1	
C953	ECUM1E104ZFN	C.CAPACITOR CH 25V 0.1U	1	
C958	ECUM1E104ZFN	C.CAPACITOR CH 25V 0.1U	1	
C961	ECUM1H270JCN	C.CAPACITOR CH 50V 27P	1	
C962	ECUM1H040DCN	C.CAPACITOR CH 50V 4P	1	
C963	ECUM1H270JCN	C.CAPACITOR CH 50V 27P	1	
C966-68	ECUM1E104ZFN	C.CAPACITOR CH 25V 0.1U	3	
C973	ECUM1E104ZFN	C.CAPACITOR CH 25V 0.1U	1	
C986	ECUM1E104ZFN	C.CAPACITOR CH 25V 0.1U	1	
CN1,N2	VJP3176B100	CONNECTOR (MALE)	2	
D61	MA151WK	DIODE	1	<R>
D101	MA151WA	DIODE	1	<R>
D102	MA151K	DIODE	1	<R>
D165,66	MA151WK	DIODE	2	<R>
D208	MA151K	DIODE	1	<R>
D401	MA151WA	DIODE	1	<R>
D404	MA151K	DIODE	1	<R>
D405	MA151WA	DIODE	1	<R>
D502	MA151WK	DIODE	1	<R>
D603	MA704	DIODE	1	<R>
D607	MA704	DIODE	1	<R>
D701	MA151K	DIODE	1	<R>
D706	MA335-R	DIODE	1	<R>
D710	MA151WA	DIODE	1	<R>
FL1	VLF0932	FILTER	1	
FL10	VLF0576	FILTER	1	
FL101,02	VLF0576	FILTER	2	
FL141	VLF0932	FILTER	1	
FL401	VLF0576	FILTER	1	
FL603	VLF0576	FILTER	1	
FL605	VLF1043	FILTER	1	
FL607	VLF0576	FILTER	1	
FL701,02	VLF0576	FILTER	2	
IC1	MC14053BF	IC	1	<R>
IC2	AN78M05	IC	1	<R>
IC3	AN79M05	IC	1	<R>
IC4	AN78M05	IC	1	<R>
IC10	AN91A12S	IC	1	<R>
IC11	MB40568PF	IC	1	<R>
IC91	MC74HC74AF	IC	1	<R>
IC101	CXD2105AQ	IC	1	<R>
IC102,03	MB40778PF	IC	2	<R>
IC141	TC4W53F	IC	1	<R>
IC142	MC14053BF	IC	1	<R>
IC144	MC14053BF	IC	1	<R>
IC165	MC14053BF	IC	1	<R>
IC212	MC14053BF	IC	1	<R>
IC214	AN6041	IC	1	<R>
IC215,16	MC14053BF	IC	2	<R>
IC217	NJM082BM	IC	1	<R>
IC218	MC14053BF	IC	1	<R>
IC219,20	NJM082BM	IC	2	<R>

Ref.No.	Part No.	Part Name & Description	Pcs	Remarks
IC401	MM74HC221AM	IC	1	<R>
IC402	SN74LS221NS	IC	1	<R>
IC403	UPD65013BC16	IC	1	<R>
IC404	MC74HC04AF	IC	1	<R>
IC405	MM74HC221AM	IC	1	<R>
IC406	MC74HC00AF	IC	1	<R>
IC408	MC14538BF	IC	1	<R>
IC409	NJM319M	IC	1	<R>
IC410	MC14528BF	IC	1	<R>
IC411	TC4W53F	IC	1	<R>
IC501	NJM082BM	IC	1	<R>
IC505	AN91A12S	IC	1	<R>
IC601,02	MB40568PF	IC	2	<R>
IC606	MB40778PF	IC	1	<R>
IC700	AN78L09	IC	1	<R>
IC703	SN74LS221NS	IC	1	<R>
IC705	MC74HC74AF	IC	1	<R>
IC706	NJM082BM	IC	1	<R>
IC707	TC4W53F	IC	1	<R>
IC709	MC74HC00AF	IC	1	<R>
IC710	SN74LS221NS	IC	1	<R>
IC712	TC4S584F	IC	1	<R>
IC714	MC74HC163AF	IC	1	<R>
IC781	SN74LS221NS	IC	1	<R>
IC901	TC4W53F	IC	1	<R>
IC909	CF45073P	IC	1	<R>
L1,L2	VLQEL05S101K	COIL 100UH	2	
L4	VLP0017	COIL	1	
L64	VLQEL05S221J	COIL 220UH	1	
L81	VLQEL05S470J	COIL 47UH	1	
L91,92	VLQEL05S2R7J	COIL 2.7UH	2	
L93	VLQEL05S151J	COIL 150UH	1	
L154	VLQEL05S150J	COIL 15UH	1	
L155	VLQEL05S180J	COIL 18UH	1	
L156,57	VLQEL05S101K	COIL 100UH	2	
L172,73	VLQEL05S101K	COIL 100UH	2	
L174	VLQEL05S150J	COIL 15UH	1	
L175	VLQEL05S180J	COIL 18UH	1	
L220,21	VLQEL05S560J	COIL 56UH	2	
L222,23	VLQEL05S101K	COIL 100UH	2	
L401	VLQEL05S470J	COIL 47UH	1	
L501,02	VLQEL05S101K	COIL 100UH	2	
L503	VLQEL05S180J	COIL 18UH	1	
L504	VLQEL05S820J	COIL 82UH	1	
L505	VLQEL05S680J	COIL 68UH	1	
L506	VLQEL05S180J	COIL 18UH	1	
L507	VLQEL05S820J	COIL 82UH	1	
L508	VLQEL05S680J	COIL 68UH	1	
L509-11	VLQEL05S101K	COIL 100UH	3	
L513	VLQEL05S221J	COIL 220UH	1	
L601,02	VLP0017	COIL	2	
L705	VLQEL05S3R3J	COIL 3.3UH	1	
L707	VLQEL05S560J	COIL 56UH	1	
L910	VLQEL05S470J	COIL 47UH	1	
Q2	2SB709-R	TRANSISTOR	1	<R>
Q3	2SD601-R	TRANSISTOR	1	<R>
Q16	2SD601-R	TRANSISTOR	1	<R>
Q17,18	2SC2295-B	TRANSISTOR	2	<R>
Q19,20	2SA1022-B	TRANSISTOR	2	<R>
Q21	2SC2295-B	TRANSISTOR	1	<R>
Q23	2SD601-R	TRANSISTOR	1	<R>
Q24	2SB709-R	TRANSISTOR	1	<R>
Q25	2SD601-R	TRANSISTOR	1	<R>
Q26	2SA1022-B	TRANSISTOR	1	<R>
Q81	2SD601-R	TRANSISTOR	1	<R>
Q82	2SB709-R	TRANSISTOR	1	<R>
Q91	2SB709-R	TRANSISTOR	1	<R>
Q101	2SA1022-B	TRANSISTOR	1	<R>
Q141-43	2SD601-R	TRANSISTOR	3	<R>

Ref.No.	Part No.	Part Name & Description	Pcs	Remarks
Q146,47	2SB709-R	TRANSISTOR	2	<R>
Q148	2SD601-R	TRANSISTOR	1	<R>
Q149,50	2SC2295-B	TRANSISTOR	2	<R>
Q151	2SA1022-B	TRANSISTOR	1	<R>
Q152	2SD601-R	TRANSISTOR	1	<R>
Q153	2SC2295-B	TRANSISTOR	1	<R>
Q154	2SB709-R	TRANSISTOR	1	<R>
Q160	2SB709-R	TRANSISTOR	1	<R>
Q161	2SD601-R	TRANSISTOR	1	<R>
Q162,63	2SC2295-B	TRANSISTOR	2	<R>
Q164	2SA1022-B	TRANSISTOR	1	<R>
Q165	2SD601-R	TRANSISTOR	1	<R>
Q201	2SB709-R	TRANSISTOR	1	<R>
Q202,03	2SD601-R	TRANSISTOR	2	<R>
Q204	2SB709-R	TRANSISTOR	1	<R>
Q230	2SB709-R	TRANSISTOR	1	<R>
Q231,32	2SD601-R	TRANSISTOR	2	<R>
Q233	2SC2404	TRANSISTOR	1	<R>
Q234	2SB709-R	TRANSISTOR	1	<R>
Q235,36	2SD601-R	TRANSISTOR	2	<R>
Q237	2SC2404	TRANSISTOR	1	<R>
Q238	2SD601-R	TRANSISTOR	1	<R>
Q240	UN2213	TRANSISTOR	1	<R>
Q241	2SD601-R	TRANSISTOR	1	<R>
Q243	2SD601-R	TRANSISTOR	1	<R>
Q402	2SD601-R	TRANSISTOR	1	<R>
Q501,02	2SB709-R	TRANSISTOR	2	<R>
Q503,04	2SC2295-B	TRANSISTOR	2	<R>
Q505	2SA1022-B	TRANSISTOR	1	<R>
Q506	2SC2295-B	TRANSISTOR	1	<R>
Q507	2SK374-R	TRANSISTOR	1	<R>
Q509,10	2SB709-R	TRANSISTOR	2	<R>
Q511,12	2SC2295-B	TRANSISTOR	2	<R>
Q513	2SA1022-B	TRANSISTOR	1	<R>
Q514	2SC2295-B	TRANSISTOR	1	<R>
Q515	2SK374-R	TRANSISTOR	1	<R>
Q516,17	2SD601-R	TRANSISTOR	2	<R>
Q518	2SB709-R	TRANSISTOR	1	<R>
Q525	2SA1022-B	TRANSISTOR	1	<R>
Q601	2SB709-R	TRANSISTOR	1	<R>
Q604-06	2SD601-R	TRANSISTOR	3	<R>
Q705	2SC2295-B	TRANSISTOR	1	<R>
Q707	2SC3757-R	TRANSISTOR	1	<R>
Q708,09	2SA1226	TRANSISTOR	2	<R>
Q710	2SC3757-R	TRANSISTOR	1	<R>
Q711	2SB709-R	TRANSISTOR	1	<R>
Q910-12	2SD601-R	TRANSISTOR	3	<R>
QR401	UN2213	TRANSISTOR	1	<R>
QR501,02	UN2213	TRANSISTOR	2	<R>
QR712,13	UN2213	TRANSISTOR	2	<R>
		RESISTORS		
R1	ERJ6GEYJ222	M.RESISTOR CH1/10W 2.2K	1	
R2	ERJ6GEYJ682	M.RESISTOR CH1/10W 6.8K	1	
R3	ERJ6GEYJ332	M.RESISTOR CH1/10W 3.3K	1	
R4,R5	ERJ6GEYJ102	M.RESISTOR CH1/10W 1K	2	
R10,11	ERJ6GEYJ102	M.RESISTOR CH1/10W 1K	2	
R12	ERJ6GEY0R00	M.RESISTOR CH1/10W 0.00	1	
R14	ERJ6GEY0R00	M.RESISTOR CH1/10W 0.00	1	
R16	ERJ6GEYJ332	M.RESISTOR CH1/10W 3.3K	1	
R17,18	ERJ6GEYJ102	M.RESISTOR CH1/10W 1K	2	
R19	ERJ6GEYJ222	M.RESISTOR CH1/10W 2.2K	1	
R20	ERJ6GEYJ221	M.RESISTOR CH1/10W 220	1	
R21	ERJ6GEYJ152	M.RESISTOR CH1/10W 1.5K	1	
R22	ERJ6GEYJ150	M.RESISTOR CH1/10W 15	1	
R23	ERJ6GEYJ472	M.RESISTOR CH1/10W 4.7K	1	
R24	ERJ6GEYJ150	M.RESISTOR CH1/10W 15	1	
R25	ERJ6GEYJ221	M.RESISTOR CH1/10W 220	1	
R26	ERJ6GEYJ152	M.RESISTOR CH1/10W 1.5K	1	
R27	ERJ6GEYJ222	M.RESISTOR CH1/10W 2.2K	1	

Ref.No.	Part No.	Part Name & Description	Pcs	Remarks
R28	ERJ6GEYJ150	M.RESISTOR CH1/10W 15	1	
R29	ERJ6GEYJ221	M.RESISTOR CH1/10W 220	1	
R30,31	ERJ6GEYJ152	M.RESISTOR CH1/10W 1.5K	2	
R32	ERJ6GEYJ472	M.RESISTOR CH1/10W 4.7K	1	
R33	ERJ6GEYJ150	M.RESISTOR CH1/10W 15	1	
R36	ERDS2TJ153	C.RESISTOR 1/4W 15K	1	
R34	ERJ6GEYJ470	M.RESISTOR CH1/10W 47	1	
R35	ERJ6GEYJ683	M.RESISTOR CH1/10W 68K	1	
R37	ERJ6GEYJ471	M.RESISTOR CH1/10W 470	1	
R38	ERJ6GEYJ223	M.RESISTOR CH1/10W 22K	1	
R39	ERJ6GEYJ472	M.RESISTOR CH1/10W 4.7K	1	
R67	ERJ6GEYJ105	M.RESISTOR CH1/10W 1M	1	
R68	ERJ6GEYJ684	M.RESISTOR CH1/10W 680K	1	
R69	ERJ6GEYJ103	M.RESISTOR CH1/10W 10K	1	
R70,71	ERJ6GEYJ223	M.RESISTOR CH1/10W 22K	2	
R72	ERJ6GEYJ222	M.RESISTOR CH1/10W 2.2K	1	
R73	ERJ6GEYJ221	M.RESISTOR CH1/10W 220	1	
R74	ERJ6GEYJ103	M.RESISTOR CH1/10W 10K	1	
R75	ERJ6GEYJ223	M.RESISTOR CH1/10W 22K	1	
R76	ERJ6GEYJ101	M.RESISTOR CH1/10W 100	1	
R77	ERJ6GEYG151	M.RESISTOR CH1/10W 150	1	
R78	ERJ6GEYJ472	M.RESISTOR CH1/10W 4.7K	1	
R79,80	ERJ6GEYJ222	M.RESISTOR CH1/10W 2.2K	2	
R81	ERJ6GEYJ153	M.RESISTOR CH1/10W 15K	1	
R82	ERJ6GEYJ821	M.RESISTOR CH1/10W 820	1	
R83	ERJ6GEYJ103	M.RESISTOR CH1/10W 10K	1	
R84	ERJ6GEYJ222	M.RESISTOR CH1/10W 2.2K	1	
R85	ERJ6GEYJ472	M.RESISTOR CH1/10W 4.7K	1	
R86	ERJ6GEYJ103	M.RESISTOR CH1/10W 10K	1	
R87	ERJ6GEYJ221	M.RESISTOR CH1/10W 220	1	
R88,89	ERJ6GEY0R00	M.RESISTOR CH1/10W 0.00	2	
R93	ERJ6GEYJ472	M.RESISTOR CH1/10W 4.7K	1	
R94	ERJ6GEYJ222	M.RESISTOR CH1/10W 2.2K	1	
R95	ERJ6GEYJ472	M.RESISTOR CH1/10W 4.7K	1	
R96	ERJ6GEYJ152	M.RESISTOR CH1/10W 1.5K	1	
R97	ERJ6GEYJ102	M.RESISTOR CH1/10W 1K	1	
R98	ERJ6GEYJ470	M.RESISTOR CH1/10W 47	1	
R99	ERJ6GEYJ472	M.RESISTOR CH1/10W 4.7K	1	
R101	ERJ6GEY0R00	M.RESISTOR CH1/10W 0.00	1	
R103	ERJ6GEY0R00	M.RESISTOR CH1/10W 0.00	1	
R106	ERJ6GEY0R00	M.RESISTOR CH1/10W 0.00	1	
R108	ERJ6GEYJ152	M.RESISTOR CH1/10W 1.5K	1	
R113	ERJ6GEYJ682	M.RESISTOR CH1/10W 6.8K	1	
R114	ERJ6GEYJ102	M.RESISTOR CH1/10W 1K	1	
R115,16	ERJ6GEYJ332	M.RESISTOR CH1/10W 3.3K	2	
R117	ERJ6GEYJ472	M.RESISTOR CH1/10W 4.7K	1	
R118	ERJ6GEYJ102	M.RESISTOR CH1/10W 1K	1	
R121	ERJ6GEY0R00	M.RESISTOR CH1/10W 0.00	1	
R131	ERJ6GEYJ103	M.RESISTOR CH1/10W 10K	1	
R134	ERJ6GEYJ223	M.RESISTOR CH1/10W 22K	1	
R135	ERJ6GEYJ472	M.RESISTOR CH1/10W 4.7K	1	
R136	ERJ6GEYJ223	M.RESISTOR CH1/10W 22K	1	
R139	ERJ6GEYJ223	M.RESISTOR CH1/10W 22K	1	
R141	VRE0034E222	M.RESISTOR CH 1/10W 2.2K	1	
R142	VRE0034E103	M.RESISTOR CH 1/10W 10K	1	
R143	ERJ6GEYJ102	M.RESISTOR CH1/10W 1K	1	
R144	ERJ6GEYJ122	M.RESISTOR CH1/10W 1.2K	1	
R145	ERJ6GEYJ682	M.RESISTOR CH1/10W 6.8K	1	
R146	ERJ6GEYJ472	M.RESISTOR CH1/10W 4.7K	1	
R147	ERJ6GEYJ332	M.RESISTOR CH1/10W 3.3K	1	
R148	ERJ6GEYJ102	M.RESISTOR CH1/10W 1K	1	
R149	ERJ6GEYJ472	M.RESISTOR CH1/10W 4.7K	1	
R150	ERJ6GEYJ470	M.RESISTOR CH1/10W 47	1	
R151	ERJ6GEYJ222	M.RESISTOR CH1/10W 2.2K	1	
R152,53	ERJ6GEYJ102	M.RESISTOR CH1/10W 1K	2	
R154	ERJ6GEYJ182	M.RESISTOR CH1/10W 1.8K	1	
R155	ERJ6GEYJ222	M.RESISTOR CH1/10W 2.2K	1	
R156	ERJ6GEYJ102	M.RESISTOR CH1/10W 1K	1	
R157	ERJ6GEYJ471	M.RESISTOR CH1/10W 470	1	
R158	ERJ6GEYJ472	M.RESISTOR CH1/10W 4.7K	1	
R159	ERJ6GEYJ101	M.RESISTOR CH1/10W 100	1	
R160	ERJ6GEYJ102	M.RESISTOR CH1/10W 1K	1	
R161	ERJ6GEYJ101	M.RESISTOR CH1/10W 100	1	
R162	ERJ6GEYJ222	M.RESISTOR CH1/10W 2.2K	1	
R163	ERJ6GEYJ101	M.RESISTOR CH1/10W 100	1	

Ref.No.	Part No.	Part Name & Description	Pcs	Remarks
R164	ERJ6GEYJ681	M.RESISTOR CH1/10W 680	1	
R165	ERJ6GEYJ471	M.RESISTOR CH1/10W 470	1	
R166	ERJ6GEYJ332	M.RESISTOR CH1/10W 3.3K	1	
R167	ERJ6GEYJ221	M.RESISTOR CH1/10W 220	1	
R168	ERJ6GEYJ682	M.RESISTOR CH1/10W 6.8K	1	
R169	ERJ6GEYJ472	M.RESISTOR CH1/10W 4.7K	1	
R170	ERJ6GEYJ470	M.RESISTOR CH1/10W 47	1	
R171	ERJ6GEYJ333	M.RESISTOR CH1/10W 33K	1	
R172	ERJ6GEYJ103	M.RESISTOR CH1/10W 10K	1	
R173	ERJ6GEYJ332	M.RESISTOR CH1/10W 3.3K	1	
R174	ERJ6GEYJ152	M.RESISTOR CH1/10W 1.5K	1	
R175,76	ERJ6GEYJ330	M.RESISTOR CH1/10W 33	2	
R177	ERJ6GEYJ101	M.RESISTOR CH1/10W 100	1	
R178	ERJ6GEYJ682	M.RESISTOR CH1/10W 6.8K	1	
R179	ERJ6GEYJ221	M.RESISTOR CH1/10W 220	1	
R180	VRE0034E222	M.RESISTOR CH 1/10W 2.2K	1	
R181	VRE0034E103	M.RESISTOR CH 1/10W 10K	1	
R182	ERJ6GEYJ103	M.RESISTOR CH1/10W 10K	1	
R183,84	ERJ6GEYJ102	M.RESISTOR CH1/10W 1K	2	
R185	ERJ6GEYJ472	M.RESISTOR CH1/10W 4.7K	1	
R186	ERJ6GEYJ222	M.RESISTOR CH1/10W 2.2K	1	
R187	ERJ6GEYJ471	M.RESISTOR CH1/10W 470	1	
R189	ERJ6GEYJ472	M.RESISTOR CH1/10W 4.7K	1	
R190	ERJ6GEYJ103	M.RESISTOR CH1/10W 10K	1	
R191	ERJ6GEYJ564	M.RESISTOR CH1/10W 560K	1	
R192	ERJ6GEYJ103	M.RESISTOR CH1/10W 10K	1	
R193	ERJ6GEYJ101	M.RESISTOR CH1/10W 100	1	
R194	ERJ6GEYJ102	M.RESISTOR CH1/10W 1K	1	
R195,96	ERJ6GEYJ101	M.RESISTOR CH1/10W 100	2	
R197	ERJ6GEYJ222	M.RESISTOR CH1/10W 2.2K	1	
R198,99	ERJ6GEYJ471	M.RESISTOR CH1/10W 470	2	
R200	ERJ6GEYJ272	M.RESISTOR CH1/10W 2.7K	1	
R201	ERJ6GEYJ470	M.RESISTOR CH1/10W 47	1	
R202	ERJ6GEYJ472	M.RESISTOR CH1/10W 4.7K	1	
R203	ERJ6GEYJ332	M.RESISTOR CH1/10W 3.3K	1	
R204	ERJ6GEYJ330	M.RESISTOR CH1/10W 33	1	
R205	ERJ6GEYJ470	M.RESISTOR CH1/10W 47	1	
R206	ERJ6GEYJ472	M.RESISTOR CH1/10W 4.7K	1	
R209	ERJ6GEYJ472	M.RESISTOR CH1/10W 4.7K	1	
R210	ERJ6GEYJ101	M.RESISTOR CH1/10W 100	1	
R211	ERJ6GEYJ330	M.RESISTOR CH1/10W 33	1	
R212	ERJ6GEYJ103	M.RESISTOR CH1/10W 10K	1	
R213-16	ERJ6GEY0R00	M.RESISTOR CH1/10W 0.00	4	
R219	ERJ6GEYJ472	M.RESISTOR CH1/10W 4.7K	1	
R220	ERJ6GEYJ101	M.RESISTOR CH1/10W 100	1	
R221	ERJ6GEYJ330	M.RESISTOR CH1/10W 33	1	
R295,96	ERJ6GEYJ682	M.RESISTOR CH1/10W 6.8K	2	
R297	ERJ6GEYJ102	M.RESISTOR CH1/10W 1K	1	
R298	ERJ6GEYJ470	M.RESISTOR CH1/10W 47	1	
R299,00	ERJ6GEYJ152	M.RESISTOR CH1/10W 1.5K	2	
R301	ERJ6GEYJ221	M.RESISTOR CH1/10W 220	1	
R302	ERJ6GEYJ470	M.RESISTOR CH1/10W 47	1	
R303	ERJ6GEYJ102	M.RESISTOR CH1/10W 1K	1	
R304	ERJ6GEYJ472	M.RESISTOR CH1/10W 4.7K	1	
R305	ERJ6GEYJ103	M.RESISTOR CH1/10W 10K	1	
R306	ERJ6GEYJ472	M.RESISTOR CH1/10W 4.7K	1	
R307	ERJ6GEYJ153	M.RESISTOR CH1/10W 15K	1	
R308	ERJ6GEYG680	M.RESISTOR CH1/10W 68	1	
R309	ERJ6GEYJ105	M.RESISTOR CH1/10W 1M	1	
R310,11	ERJ6GEYJ103	M.RESISTOR CH1/10W 10K	2	
R315,16	ERJ6GEYJ681	M.RESISTOR CH1/10W 680	2	
R317	ERJ6GEYJ102	M.RESISTOR CH1/10W 1K	1	
R318	ERJ6GEYJ470	M.RESISTOR CH1/10W 47	1	
R319	ERJ6GEYJ152	M.RESISTOR CH1/10W 1.5K	1	
R320	ERJ6GEYJ221	M.RESISTOR CH1/10W 220	1	
R321	ERJ6GEYJ152	M.RESISTOR CH1/10W 1.5K	1	
R322	ERJ6GEYJ470	M.RESISTOR CH1/10W 47	1	
R323	ERJ6GEYJ102	M.RESISTOR CH1/10W 1K	1	
R324	ERJ6GEYJ472	M.RESISTOR CH1/10W 4.7K	1	
R325	ERJ6GEYJ103	M.RESISTOR CH1/10W 10K	1	
R326	ERJ6GEYJ472	M.RESISTOR CH1/10W 4.7K	1	
R327	ERJ6GEYJ153	M.RESISTOR CH1/10W 15K	1	
R328	ERJ6GEYG680	M.RESISTOR CH1/10W 68	1	
R330	ERJ6GEYJ105	M.RESISTOR CH1/10W 1M	1	
R331,32	ERJ6GEYJ103	M.RESISTOR CH1/10W 10K	2	

Ref.No.	Part No.	Part Name & Description	Pcs	Remarks
R335	ERJ6GEYJ101	M.RESISTOR CH1/10W 100	1	
R336	ERJ6GEYJ332	M.RESISTOR CH1/10W 3.3K	1	
R337	ERJ6GEYJ223	M.RESISTOR CH1/10W 22K	1	
R338,39	ERJ6GEYJ101	M.RESISTOR CH1/10W 100	2	
R340	ERJ6GEYJ472	M.RESISTOR CH1/10W 4.7K	1	
R341	ERJ6GEYJ332	M.RESISTOR CH1/10W 3.3K	1	
R342-44	ERJ6GEYJ103	M.RESISTOR CH1/10W 10K	3	
R345	ERJ6GEYJ472	M.RESISTOR CH1/10W 4.7K	1	
R346	ERJ6GEYJ103	M.RESISTOR CH1/10W 10K	1	
R347	ERJ6GEYJ334	M.RESISTOR CH1/10W 330K	1	
R348-50	ERJ6GEYJ103	M.RESISTOR CH1/10W 10K	3	
R351	ERJ6GEYJ223	M.RESISTOR CH1/10W 22K	1	
R353	ERJ6GEYJ471	M.RESISTOR CH1/10W 470	1	
R354	ERJ6GEYJ102	M.RESISTOR CH1/10W 1K	1	
R356	ERJ6GEYJ103	M.RESISTOR CH1/10W 10K	1	
R357	ERJ6GEY0R00	M.RESISTOR CH1/10W 0.00	1	
R359	ERJ6GEYJ105	M.RESISTOR CH1/10W 1M	1	
R374	ERJ6GEYJ472	M.RESISTOR CH1/10W 4.7K	1	
R401	ERJ6GEYJ473	M.RESISTOR CH1/10W 47K	1	
R402	ERJ6GEYJ153	M.RESISTOR CH1/10W 15K	1	
R403	ERJ6GEYJ332	M.RESISTOR CH1/10W 3.3K	1	
R404	ERJ6GEYJ103	M.RESISTOR CH1/10W 10K	1	
R405	ERJ6GEYJ472	M.RESISTOR CH1/10W 4.7K	1	
R406	ERJ6GEYJ104	M.RESISTOR CH1/10W 100K	1	
R411	ERJ6GEY0R00	M.RESISTOR CH1/10W 0.00	1	
R412	ERJ6GEYJ222	M.RESISTOR CH1/10W 2.2K	1	
R414	ERJ6GEY0R00	M.RESISTOR CH1/10W 0.00	1	
R416	ERJ6GEYJ222	M.RESISTOR CH1/10W 2.2K	1	
R417	ERJ6GEYJ152	M.RESISTOR CH1/10W 1.5K	1	
R420	ERDS2TJ473	C.RESISTOR 1/4W 47K	1	
R421	ERJ6GEYJ682	M.RESISTOR CH1/10W 6.8K	1	
R422	ERJ6GEYJ473	M.RESISTOR CH1/10W 47K	1	
R425	ERJ6GEYJ472	M.RESISTOR CH1/10W 4.7K	1	
R427	ERJ6GEYJ103	M.RESISTOR CH1/10W 10K	1	
R432	ERJ6GEYJ473	M.RESISTOR CH1/10W 47K	1	
R433	ERJ6GEYJ393	M.RESISTOR CH1/10W 39K	1	
R437	ERJ6GEYJ222	M.RESISTOR CH1/10W 2.2K	1	
R439	ERJ6GEYJ152	M.RESISTOR CH1/10W 1.5K	1	
R440	ERJ6GEYJ472	M.RESISTOR CH1/10W 4.7K	1	
R441	ERJ6GEYJ152	M.RESISTOR CH1/10W 1.5K	1	
R445	ERJ6GEYJ222	M.RESISTOR CH1/10W 2.2K	1	
R451	ERJ6GEYJ221	M.RESISTOR CH1/10W 220	1	
R452	ERJ6GEYJ682	M.RESISTOR CH1/10W 6.8K	1	
R453	ERJ6GEYJ332	M.RESISTOR CH1/10W 3.3K	1	
R460	ERJ6GEYJ472	M.RESISTOR CH1/10W 4.7K	1	
R461	ERJ6GEYJ103	M.RESISTOR CH1/10W 10K	1	
R462	ERJ6GEYJ101	M.RESISTOR CH1/10W 100	1	
R463,64	ERJ6GEYJ472	M.RESISTOR CH1/10W 4.7K	2	
R465	ERJ6GEYJ105	M.RESISTOR CH1/10W 1M	1	
R466	ERJ6GEYJ103	M.RESISTOR CH1/10W 10K	1	
R467	ERJ6GEYJ101	M.RESISTOR CH1/10W 100	1	
R468	ERJ6GEYJ472	M.RESISTOR CH1/10W 4.7K	1	
R469	ERJ6GEY0R00	M.RESISTOR CH1/10W 0.00	1	
R501	ERJ6GEYJ222	M.RESISTOR CH1/10W 2.2K	1	
R502	ERJ6GEYJ102	M.RESISTOR CH1/10W 1K	1	
R503	ERJ6GEYJ682	M.RESISTOR CH1/10W 6.8K	1	
R504	ERJ6GEYJ222	M.RESISTOR CH1/10W 2.2K	1	
R505	VRE0034E102	M.RESISTOR CH 1/10W 1K	1	
R506	ERJ6GEYJ222	M.RESISTOR CH1/10W 2.2K	1	
R507	ERJ6GEYJ102	M.RESISTOR CH1/10W 1K	1	
R508	ERJ6GEYJ470	M.RESISTOR CH1/10W 47	1	
R509,10	ERJ6GEYJ102	M.RESISTOR CH1/10W 1K	2	
R511	ERJ6GEYJ470	M.RESISTOR CH1/10W 47	1	
R512	ERJ6GEYJ102	M.RESISTOR CH1/10W 1K	1	
R513	VRE006606472	M.RESISTOR CH 1/10W 4.7K	1	
R514	ERJ6GEYJ222	M.RESISTOR CH1/10W 2.2K	1	
R515	ERJ6GEYJ473	M.RESISTOR CH1/10W 47K	1	
R516	ERJ6GEYJ332	M.RESISTOR CH1/10W 3.3K	1	
R517,18	ERJ6GEYJ101	M.RESISTOR CH1/10W 100	2	
R519	ERJ6GEYJ154	M.RESISTOR CH1/10W 150K	1	
R520	ERJ6GEYJ103	M.RESISTOR CH1/10W 10K	1	
R521	ERJ6GEYJ331	M.RESISTOR CH1/10W 330	1	
R522	ERJ6GEYK475	M.RESISTOR CH1/10W 4.7M	1	
R523	ERJ6GEYJ103	M.RESISTOR CH1/10W 10K	1	
R524	ERJ6GEYJ472	M.RESISTOR CH1/10W 4.7K	1	

Ref.No.	Part No.	Part Name & Description	Pcs	Remarks
R525	ERJ6GEYJ103	M.RESISTOR CH1/10W 10K	1	
R526	ERJ6GEYJ222	M.RESISTOR CH1/10W 2.2K	1	
R527	ERJ6GEYJ102	M.RESISTOR CH1/10W 1K	1	
R528	ERJ6GEYJ682	M.RESISTOR CH1/10W 6.8K	1	
R529	ERJ6GEYJ222	M.RESISTOR CH1/10W 2.2K	1	
R530	ERJ6GEYJ104	M.RESISTOR CH1/10W 100K	1	
R531	ERJ6GEYJ222	M.RESISTOR CH1/10W 2.2K	1	
R532	ERJ6GEYJ102	M.RESISTOR CH1/10W 1K	1	
R533	ERJ6GEYJ470	M.RESISTOR CH1/10W 47	1	
R535	VRE006606472	M.RESISTOR CH 1/10W 4.7K	1	
R536	ERJ6GEYJ473	M.RESISTOR CH1/10W 47K	1	
R538	ERJ6GEYJ332	M.RESISTOR CH1/10W 3.3K	1	
R539	VRE0034E102	M.RESISTOR CH 1/10W 1K	1	
R540	ERJ6GEYJ103	M.RESISTOR CH1/10W 10K	1	
R541	ERJ6GEYJ154	M.RESISTOR CH1/10W 150K	1	
R543	ERJ6GEYJ331	M.RESISTOR CH1/10W 330	1	
R544	ERJ6GEYJ103	M.RESISTOR CH1/10W 10K	1	
R545	ERJ6GEYK475	M.RESISTOR CH1/10W 4.7M	1	
R546	ERJ6GEYJ472	M.RESISTOR CH1/10W 4.7K	1	
R547	ERJ6GEYJ103	M.RESISTOR CH1/10W 10K	1	
R549	ERJ6GEYJ104	M.RESISTOR CH1/10W 100K	1	
R550	ERJ6GEYJ102	M.RESISTOR CH1/10W 1K	1	
R551,52	ERJ6GEYJ101	M.RESISTOR CH1/10W 100	2	
R553	ERJ6GEYJ222	M.RESISTOR CH1/10W 2.2K	1	
R554	ERJ6GEYJ221	M.RESISTOR CH1/10W 220	1	
R555	ERJ6GEYJ682	M.RESISTOR CH1/10W 6.8K	1	
R556	ERJ6GEYJ332	M.RESISTOR CH1/10W 3.3K	1	
R559	ERJ6GEYJ152	M.RESISTOR CH1/10W 1.5K	1	
R560	ERJ6GEYJ682	M.RESISTOR CH1/10W 6.8K	1	
R561	ERJ6GEYJ273	M.RESISTOR CH1/10W 27K	1	
R562	ERJ6GEYJ153	M.RESISTOR CH1/10W 15K	1	
R571	ERJ6GEYJ152	M.RESISTOR CH1/10W 1.5K	1	
R572	ERJ6GEYJ271	M.RESISTOR CH1/10W 270	1	
R573	ERJ6GEYJ101	M.RESISTOR CH1/10W 100	1	
R574	ERJ6GEYJ102	M.RESISTOR CH1/10W 1K	1	
R575	ERJ6GEYJ330	M.RESISTOR CH1/10W 33	1	
R576	ERJ6GEYJ105	M.RESISTOR CH1/10W 1M	1	
R577	ERJ6GEYJ684	M.RESISTOR CH1/10W 680K	1	
R578	ERJ6GEYJ103	M.RESISTOR CH1/10W 10K	1	
R579	ERJ6GEYJ222	M.RESISTOR CH1/10W 2.2K	1	
R580	ERJ6GEYJ103	M.RESISTOR CH1/10W 10K	1	
R581-83	ERJ6GEYJ223	M.RESISTOR CH1/10W 22K	3	
R584	ERJ6GEYJ152	M.RESISTOR CH1/10W 1.5K	1	
R585	ERJ6GEYJ470	M.RESISTOR CH1/10W 47	1	
R589	ERJ6GEYJ221	M.RESISTOR CH1/10W 220	1	
R593	ERJ6GEYJ470	M.RESISTOR CH1/10W 47	1	
R601,02	ERJ6GEYJ101	M.RESISTOR CH1/10W 100	2	
R614	VRE0034E473	M.RESISTOR CH 1/10W 47K	1	
R615	VRE0034E223	M.RESISTOR CH 1/10W 22K	1	
R616	VRE0034E473	M.RESISTOR CH 1/10W 47K	1	
R617	VRE0034E223	M.RESISTOR CH 1/10W 22K	1	
R621	ERJ6GEYJ103	M.RESISTOR CH1/10W 10K	1	
R622	ERJ6GEYJ102	M.RESISTOR CH1/10W 1K	1	
R623,24	VRE0034E471	M.RESISTOR CH 1/10W 470	2	
R625	ERJ6GEYJ470	M.RESISTOR CH1/10W 47	1	
R631	ERJ6GEYJ101	M.RESISTOR CH1/10W 100	1	
R632	ERJ6GEYJ472	M.RESISTOR CH1/10W 4.7K	1	
R633	ERJ6GEYJ272	M.RESISTOR CH1/10W 2.7K	1	
R635	VRE0034E681	M.RESISTOR CH 1/10W 680	1	
R636	VRE0034E152	M.RESISTOR CH 1/10W 1.5K	1	
R638	ERJ6GEYJ222	M.RESISTOR CH1/10W 2.2K	1	
R648	ERJ6GEYJ330	M.RESISTOR CH1/10W 33	1	
R656	ERJ6GEYJ221	M.RESISTOR CH1/10W 220	1	
R658	VRE0034E222	M.RESISTOR CH 1/10W 2.2K	1	
R659	VRE0034E103	M.RESISTOR CH 1/10W 10K	1	
R660-67	ERJ6GEYJ331	M.RESISTOR CH1/10W 330	8	
R701	ERJ6GEYJ103	M.RESISTOR CH1/10W 10K	1	
R702	ERJ6GEYJ682	M.RESISTOR CH1/10W 6.8K	1	
R703	ERJ6GEYJ222	M.RESISTOR CH1/10W 2.2K	1	
R704	ERJ6GEYJ683	M.RESISTOR CH1/10W 68K	1	
R705	ERJ6GEYJ332	M.RESISTOR CH1/10W 3.3K	1	
R706,07	ERJ6GEYJ562	M.RESISTOR CH1/10W 5.6K	2	
R708	ERJ6GEYJ332	M.RESISTOR CH1/10W 3.3K	1	
R709	ERJ6GEYJ153	M.RESISTOR CH1/10W 15K	1	
R710	ERJ6GEYJ681	M.RESISTOR CH1/10W 680	1	

Ref.No.	Part No.	Part Name & Description	Pcs	Remarks
R712	ERJ6GEYJ682	M.RESISTOR CH1/10W 6.8K	1	
R713	ERJ6GEYJ152	M.RESISTOR CH1/10W 1.5K	1	
R719	ERJ6GEYJ103	M.RESISTOR CH1/10W 10K	1	
R721	ERJ6GEYJ223	M.RESISTOR CH1/10W 22K	1	
R722	ERJ6GEYJ682	M.RESISTOR CH1/10W 6.8K	1	
R730	ERJ6GEYJ152	M.RESISTOR CH1/10W 1.5K	1	
R731	ERJ6GEYJ393	M.RESISTOR CH1/10W 39K	1	
R732	ERJ6GEYJ223	M.RESISTOR CH1/10W 22K	1	
R738	ERJ6GEYJ152	M.RESISTOR CH1/10W 1.5K	1	
R742	ERJ6GEYJ104	M.RESISTOR CH1/10W 100K	1	
R743	ERJ6GEYJ103	M.RESISTOR CH1/10W 10K	1	
R751	ERJ6GEYJ472	M.RESISTOR CH1/10W 4.7K	1	
R752	ERJ6GEYJ102	M.RESISTOR CH1/10W 1K	1	
R753,54	ERJ6GEYJ472	M.RESISTOR CH1/10W 4.7K	2	
R755,56	ERJ6GEYJ222	M.RESISTOR CH1/10W 2.2K	2	
R761	ERJ6GEYJ103	M.RESISTOR CH1/10W 10K	1	
R762	ERJ6GEYJ123	M.RESISTOR CH1/10W 12K	1	
R763,64	ERJ6GEYJ102	M.RESISTOR CH1/10W 1K	2	
R765	ERJ6GEYJ332	M.RESISTOR CH1/10W 3.3K	1	
R766	ERJ6GEYJ470	M.RESISTOR CH1/10W 47	1	
R770,71	ERJ6GEYJ682	M.RESISTOR CH1/10W 6.8K	2	
R783	ERJ6GEYJ103	M.RESISTOR CH1/10W 10K	1	
R901	ERJ6GEY0R00	M.RESISTOR CH1/10W 0.00	1	
R902	ERJ6GEYJ473	M.RESISTOR CH1/10W 47K	1	
R921	ERJ6GEYJ682	M.RESISTOR CH1/10W 6.8K	1	
R922	ERJ6GEYJ103	M.RESISTOR CH1/10W 10K	1	
R926	ERJ6GEYJ682	M.RESISTOR CH1/10W 6.8K	1	
R927	ERJ6GEYJ102	M.RESISTOR CH1/10W 1K	1	
R932	ERJ6GEYJ104	M.RESISTOR CH1/10W 100K	1	
R933	ERJ6GEYG680	M.RESISTOR CH1/10W 68	1	
R934	ERJ6GEYJ562	M.RESISTOR CH1/10W 5.6K	1	
R935	ERJ6GEYJ152	M.RESISTOR CH1/10W 1.5K	1	
R936	ERJ6GEY0R00	M.RESISTOR CH1/10W 0.00	1	
R938,39	ERJ6GEY0R00	M.RESISTOR CH1/10W 0.00	2	
R942-44	ERJ6GEY0R00	M.RESISTOR CH1/10W 0.00	3	
R945	ERJ6GEYJ152	M.RESISTOR CH1/10W 1.5K	1	
R946	ERJ6GEYJ102	M.RESISTOR CH1/10W 1K	1	
R947	ERJ6GEYJ122	M.RESISTOR CH1/10W 1.2K	1	
R950	ERJ6GEYJ682	M.RESISTOR CH1/10W 6.8K	1	
R951	ERJ6GEYJ472	M.RESISTOR CH1/10W 4.7K	1	
R952	ERJ6GEYJ332	M.RESISTOR CH1/10W 3.3K	1	
R953	ERJ6GEYJ684	M.RESISTOR CH1/10W 680K	1	
R980	ERJ6GEYJ102	M.RESISTOR CH1/10W 1K	1	
R981,82	ERJ6GEYJ682	M.RESISTOR CH1/10W 6.8K	2	
R984	ERJ6GEYJ472	M.RESISTOR CH1/10W 4.7K	1	
R997	ERJ6GEYJ473	M.RESISTOR CH1/10W 47K	1	
R999	ERJ6GEY0R00	M.RESISTOR CH1/10W 0.00	1	
SW401	VSS0283	SWITCH	1	<R>
VC141	VCV0050	TRIMMER	1	
VC401	VCV0050	TRIMMER	1	
VC501,02	VCV0031	TRIMMER	2	
VL701	VLQ0415	COIL	1	
VR1	EVMEASA00B13	V.RESISTOR 1K	1	
VR81	EVMEASA00B13	V.RESISTOR 1K	1	
VR141,42	EVMEASA00B23	V.RESISTOR 2K	2	
VR165	EVMEASA00B23	V.RESISTOR 2K	1	
VR212-15	EVMEGSA00B13	V.RESISTOR 1K	4	
VR216,17	EVMEGSA00B14	V.RESISTOR 10K	2	
VR218	EVMEGSA00B53	V.RESISTOR 5K	1	
VR219	EVMEGSA00B14	V.RESISTOR 10K	1	
VR401,02	EVMEASA00B13	V.RESISTOR 1K	2	
VR501,02	EVMEGSA00B23	V.RESISTOR 2K	2	
VR503	EVMEASA00B53	V.RESISTOR 5K	1	

Ref.No.	Part No.	Part Name & Description	Pcs	Remarks
VR601,02	EVMEGSA00B14	V.RESISTOR 10K	2	
VR701	EVMEGSA00B23	V.RESISTOR 2K	1	
VR702	EVMEASA00B53	V.RESISTOR 5K	1	
VR906	EVMEASA00B53	V.RESISTOR 5K	1	
X201	VSX0270	CRYSTAL OSCILLATOR	1	<R>
		MISCELLANEOUS		
	VML2143	CARD PULLER	1	
	VML2144	CARD PULLER	1	
	VMZ1547	BARRIER	1	
	VXA3966	P.C.B. SHIELD PLATE	1	
	XYNV3+K6FR	SCREW	5	

MODULES

- Block Diagrams
- Schematic Diagrams
- Printed Circuit Boards

This section provides the block diagrams, schematic diagrams and printed circuit boards.

Note :

1. Do not use the part numbers shown on the schematic diagram or P.C.Board layout for ordering. The correct part number for ordering is shown in the Exploded View/Parts List section.
2. Unless otherwise specified, all resistors are in OHMS, K = 1,000 OHMS, all capacitors are in MICROFARADS (uF), P = uuF.
3. The foil paterns on the P.C.Board layout, printed with the blue color is the component side.
4. Please refer to the Electrical Parts List for the value and existance of component parts on the P.C.Board.

Panasonic

CONTENTS

BLOCK DIAGRAM

OVER ALL BLOCK DIAGRAM(AU-65H) BLK-1
W1(TBC & SYNC GEN) BLOCK DIAGRAM1/3(NTSC) BLK-2
W1(TBC & SYNC GEN) BLOCK DIAGRAM1/3(PAL) BLK-3
W1(TBC & SYNC GEN) BLOCK DIAGRAM2/3 ..... BLK-4
W1(TBC & SYNC GEN) BLOCK DIAGRAM3/3 ..... BLK-5
W4(DEC & CTCM) BLOCK DIAGRAM1/4(AU-65H NTSC) BLK-6
W4(DEC & CTCM) BLOCK DIAGRAM2/4(AU-65H NTSC) BLK-7
W4(DEC & CTCM) BLOCK DIAGRAM3/4(AU-65H NTSC) BLK-8
W4(DEC & CTCM) BLOCK DIAGRAM4/4(AU-65H NTSC) BLK-9
W4(DECODER) BLOCK DIAGRAM1/4(AU-65H PAL) BLK-10
W4(DECODER) BLOCK DIAGRAM2/4(AU-65H PAL) BLK-11
W4(DECODER) BLOCK DIAGRAM3/4(AU-65H PAL) BLK-12
W4(DECODER) BLOCK DIAGRAM4/4(AU-65H PAL) BLK-13
SENC & P IN P BLOCK DIAGRAM1/2(AU-65H) BLK-14
SENC & P IN P BLOCK DIAGRAM2/2(AU-65H) BLK-15
W6(AUDIO) BLOCK DIAGRAM1/3 ..... BLK-16
W6(AUDIO) BLOCK DIAGRAM2/3 ..... BLK-17
W6(AUDIO) BLOCK DIAGRAM3/3 ..... BLK-18
B1(SYSTEM CONTROL) BLOCK DIAGRAM1/3 ..... BLK-19
B1(SYSTEM CONTROL) BLOCK DIAGRAM2/3 ..... BLK-20
B1(SYSTEM CONTROL) BLOCK DIAGRAM3/3 ..... BLK-21
FRONT PANEL A,B BLOCK DIAGRAM(AU-65H) BLK-22
VIDEO I/O BLOCK DIAGRAM1/2 ..... BLK-23
VIDEO I/O BLOCK DIAGRAM2/2 ..... BLK-24

SCHEMATIC DIAGRAM

INTERCONNECTION1/4 ..... SCM-1
INTERCONNECTION2/4 ..... SCM-1
INTERCONNECTION3/4 ..... SCM-2
INTERCONNECTION4/4 ..... SCM-2
W0(W,MOTHER) SCHEMATIC DIAGRAM1/4 ..... SCM-3
W0(W,MOTHER) SCHEMATIC DIAGRAM2/4 ..... SCM-3
W0(W,MOTHER) SCHEMATIC DIAGRAM3/4 ..... SCM-4
W0(W,MOTHER) SCHEMATIC DIAGRAM4/4 ..... SCM-4
W1(TBC & SYNC GEN) SCHEMATIC DIAGRAM1/6 ..... SCM-5
W1(TBC & SYNC GEN) SCHEMATIC DIAGRAM2/6 ..... SCM-5
W1(TBC & SYNC GEN) SCHEMATIC DIAGRAM3/6 ..... SCM-6
W1(TBC & SYNC GEN) SCHEMATIC DIAGRAM4/6 ..... SCM-6
W1(TBC & SYNC GEN) SCHEMATIC DIAGRAM5/6 ..... SCM-7
W1(TBC & SYNC GEN) SCHEMATIC DIAGRAM6/6 ..... SCM-7

W2(ENCODER) SCHEMATIC DIAGRAM1/4(NTSC) SCM-8
W2(ENCODER) SCHEMATIC DIAGRAM2/4(NTSC) SCM-8
W2(ENCODER) SCHEMATIC DIAGRAM3/4(NTSC) SCM-9
W2(ENCODER) SCHEMATIC DIAGRAM4/4(AU-65H PAL) SCM-9
W4(DECODER) SCHEMATIC DIAGRAM1/4(AU-65H NTSC) SCM-10
W4(DECODER) SCHEMATIC DIAGRAM2/4(AU-65H NTSC) SCM-10
W4(DECODER) SCHEMATIC DIAGRAM3/4(AU-65H NTSC) SCM-11
W4(DECODER) SCHEMATIC DIAGRAM4/4(AU-65H NTSC) SCM-11
W4(DECODER) SCHEMATIC DIAGRAM1/4 (AU-65H PAL) SCM-12
W4(DECODER) SCHEMATIC DIAGRAM2/4(AU-65H PAL) SCM-12
W4(DECODER) SCHEMATIC DIAGRAM3/4(AU-65H PAL) SCM-13
W4(DECODER) SCHEMATIC DIAGRAM4/4(AU-65H PAL) SCM-13
SENC & P IN P SCHEMATIC DIAGRAM1/2(AU-65H) SCM-14
SENC & P IN P SCHEMATIC DIAGRAM2/2(AU-65H) SCM-14
W6(AUDIO) SCHEMATIC DIAGRAM1/4 ..... SCM-15
W6(AUDIO) SCHEMATIC DIAGRAM2/4 ..... SCM-15
W6(AUDIO) SCHEMATIC DIAGRAM3/4 ..... SCM-16
W6(AUDIO) SCHEMATIC DIAGRAM4/4 ..... SCM-16
B0(B,MOTHER) SCHEMATIC DIAGRAM1/2 ..... SCM-17
B0(B,MOTHER) SCHEMATIC DIAGRAM2/2 ..... SCM-17
B1(SYSTEM CONTROL) SCHEMATIC DIAGRAM1/5 ..... SCM-18
B1(SYSTEM CONTROL) SCHEMATIC DIAGRAM2/5 ..... SCM-18
B1(SYSTEM CONTROL) SCHEMATIC DIAGRAM3/5 ..... SCM-19
B1(SYSTEM CONTROL) SCHEMATIC DIAGRAM4/5 ..... SCM-19
B1(SYSTEM CONTROL) SCHEMATIC DIAGRAM5/5 ..... SCM-20
VIDEO I/O SCHEMATIC DIAGRAM SCM-20
AUDIO I/O SCHEMATIC DIAGRAM1/2 ..... SCM-21
AUDIO I/O SCHEMATIC DIAGRAM2/2 ..... SCM-21
FRONT INTERFACE SCHEMATIC DIAGRAM(NTSC) SCM-22
FRONT INTERFACE SCHEMATIC DIAGRAM(PAL) SCM-22
FRONT PANEL A SCHEMATIC DIAGRAM1/2 ..... SCM-23
FRONT PANEL A SCHEMATIC DIAGRAM2/2 ..... SCM-23
FRONT PANEL B SCHEMATIC DIAGRAM1/2 ..... SCM-24
FRONT PANEL B SCHEMATIC DIAGRAM2/2 ..... SCM-24

❶ LOCATION OF TEST POINTS & CONTROLS (W1, W4)

P.C. Board Location

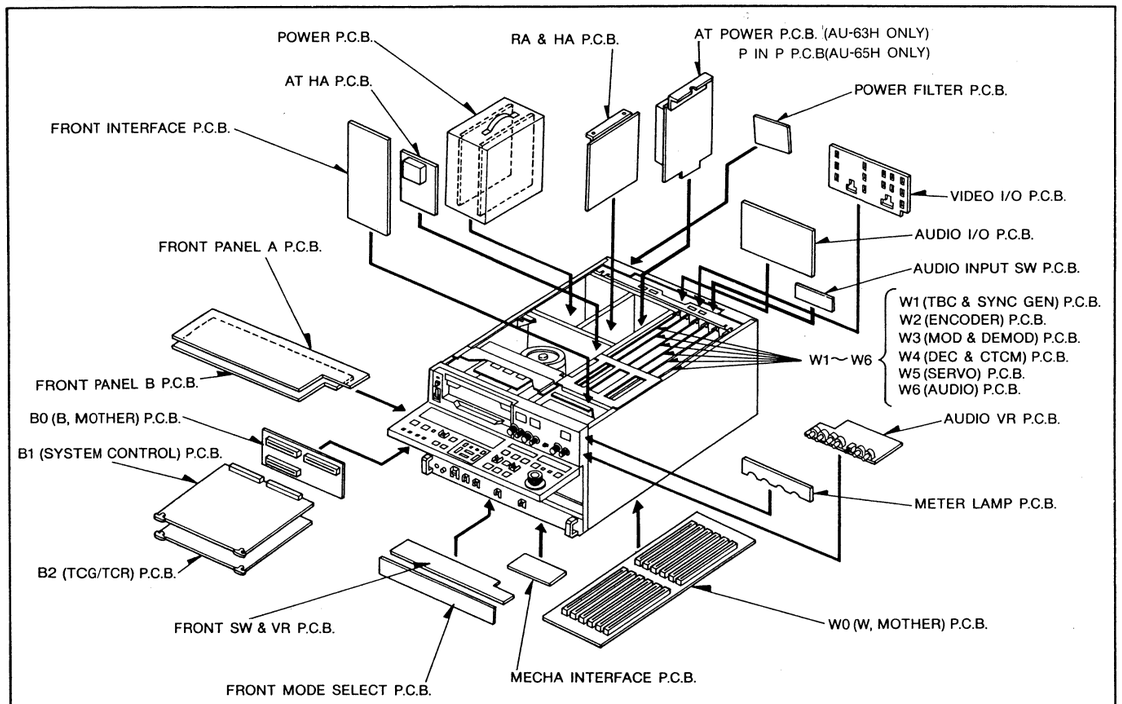

W1 TBC & SYNC GEN P.C.B.

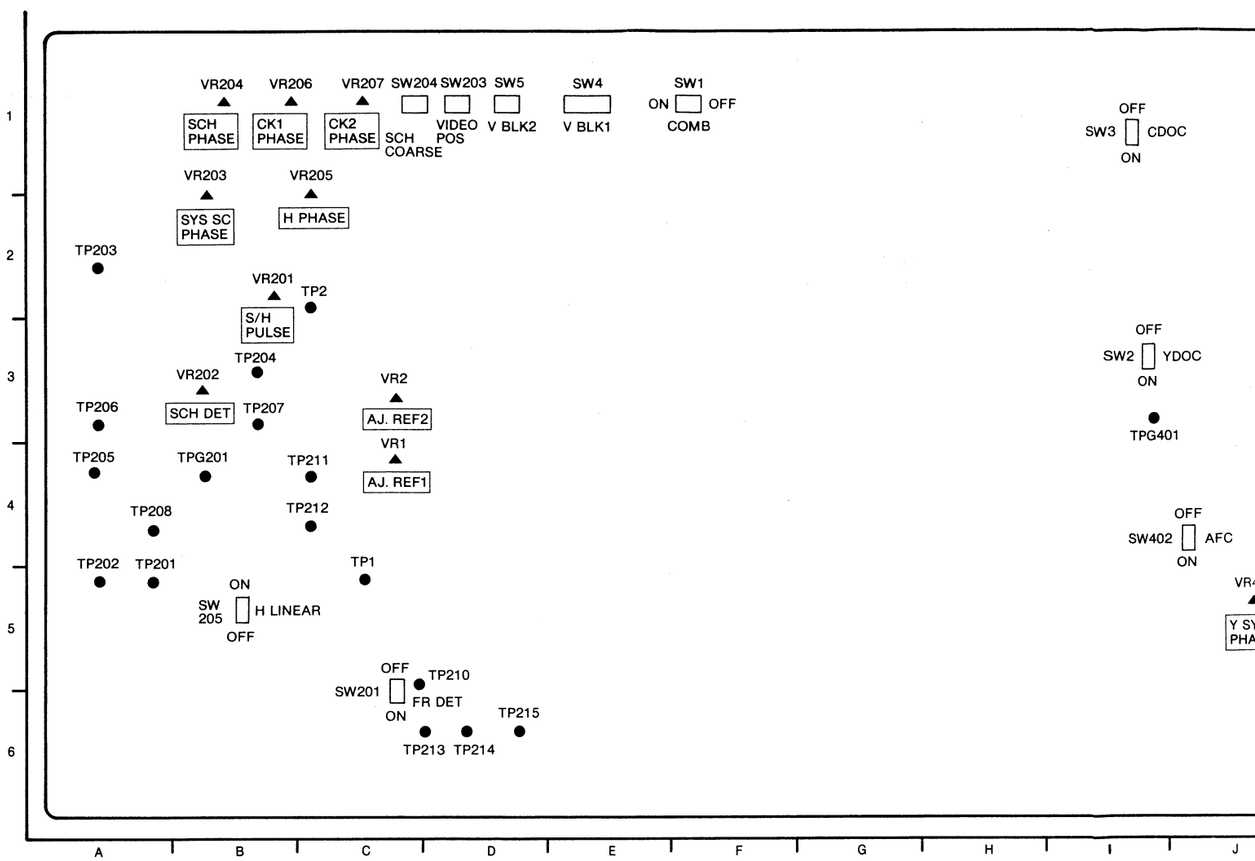

AU-65H W1 TBC & SYNC

ADJUSTMENT				TESTPOINT					
VR1	C-4	VR405	L-1	TP1	C-5	TP212	C-4	TP427	
VR2	C-3	VR406	L-1	TP2	C-2	TP213	D-6	TPG201	
VR201	B-2	VR408	M-5	TP201	A-5	TP214	D-6	TPG401	
VR202	B-3	VR409	L-2	TP202	A-5	TP215	D-6	TPG402	
VR203	B-2	VR410	L-4	TP203	A-2	TP412	M-5	SW	
VR204	B-1			TP204	B-3	TP413	L-6	SW1	
VR205	C-2			TP205	A-4	TP416	L-6	SW2	
VR206	B-1			TP206	A-3	TP417	M-5	SW3	
VR207	C-1			TP207	B-3	TP422	J-4	SW4	
VR401	J-5			TP208	A-4	TP423	K-4	SW5	
VR402	L-2			TP210	C-5	TP424	M-4	SW6	
VR403	M-5			TP211	C-4	TP425	M-4	SW7	
						TP426	L-4		

ADDRESS INFORMATION

W4 DECODER/CTCM P.C.B.

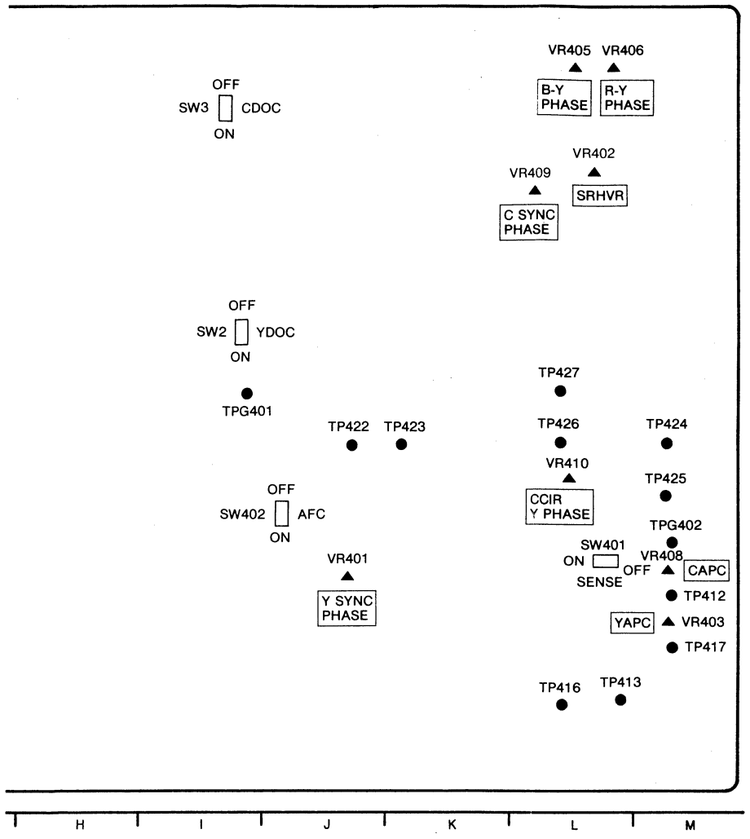

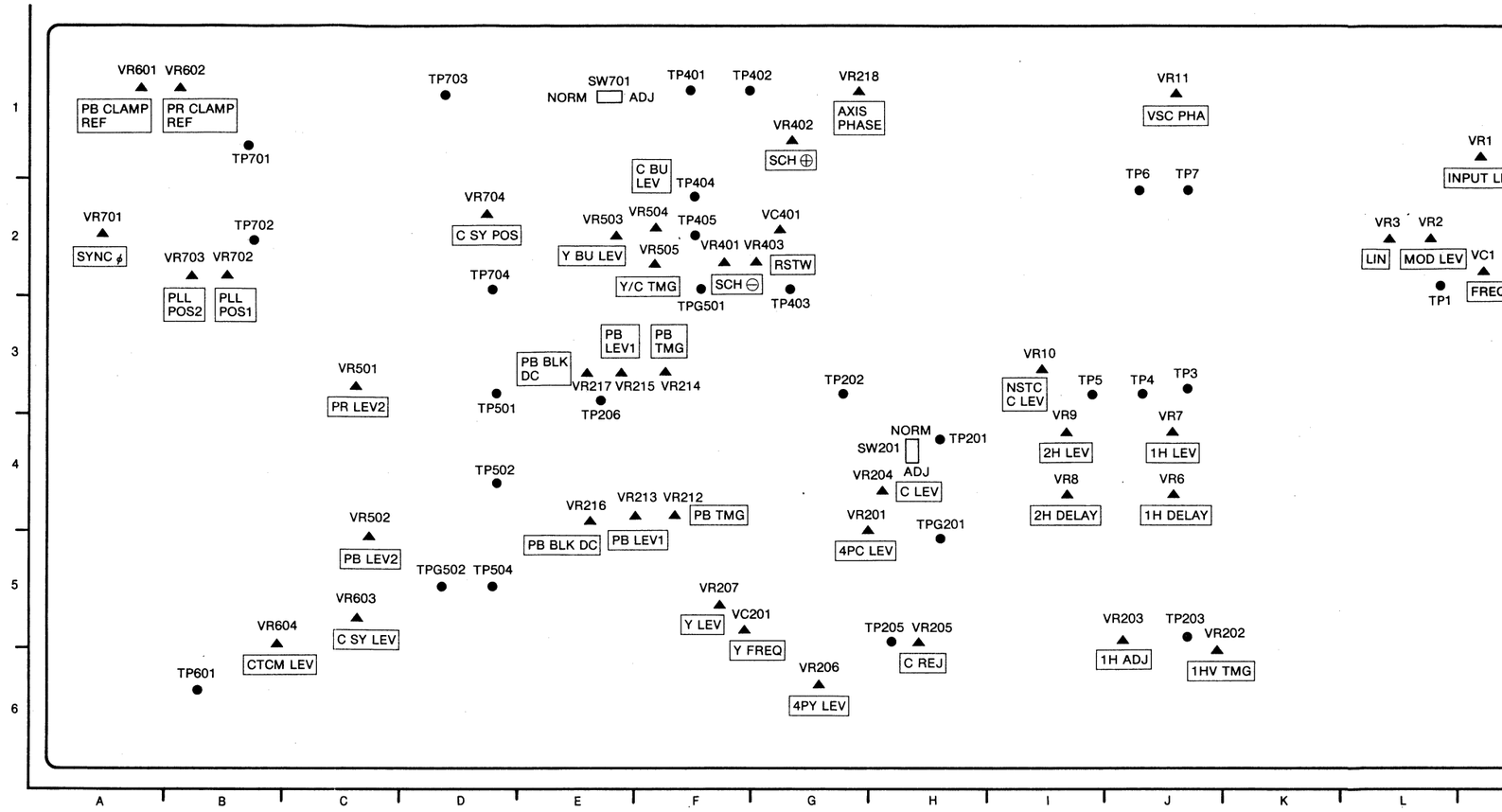

BC & SYNC					
TP212	C-4	TP427	L-3	SW8	D-1
TP213	D-6	TPG201	B-4	SW201	C-5
TP214	D-6	TPG401	I-3	SW203	D-1
TP215	D-6	TPG402	M-5	SW204	C-1
TP412	M-5	**SWITCH**		SW205	B-5
TP413	L-6	SW1	F-1	SW401	L-5
TP416	L-6	SW2	I-3	SW402	J-4
TP417	M-5	SW3	I-1		
TP422	J-4	SW4	E-1		
TP423	K-4	SW5	D-1		
TP424	M-4	SW6	D-1		
TP425	M-4	SW7	D-1		
TP426	L-4				

AU-65H W4 DECODER/CTCM

ADJUSTMENT	
VC1	M-2
VC201	F-5
VC401	G-2
VR1	M-1
VR2	L-2
VR3	L-2
VR6	J-4
VR7	J-4
VR8	I-4
VR9	I-4
VR10	I-3
VR11	J-1

VR201	G-4	VR218	G-1
VR202	J-5	VR401	F-2
VR203	J-5	VR402	G-1
VR204	H-4	VR403	G-2
VR205	H-5	VR501	C-3
VR206	G-6	VR502	C-4
VR207	F-5	VR503	E-2
VR212	F-4	VR504	F-2
VR213	E-4	VR505	F-2
VR214	F-3	VR601	A-1
VR215	E-3	VR602	B-1
VR216	E-4	VR603	C-5
VR217	E-3	VR604	B-5

VR701	A-2
VR702	B-2
VR703	B-2
VR704	D-2
TESTPOINT	
TP1	L-2
TP3	J-3
TP4	J-3
TP5	I-3
TP6	J-2
TP7	J-2
TP201	H-4
TP202	G-3

TP203	J-5
TP204	I-6
TP205	H-5
TP206	E-3
TP401	F-1
TP402	F-1
TP403	G-2
TP404	F-2
TP405	F-2
TP501	D-3
TP502	D-4
TP504	D-5
TP601	B-6

TP701	B-1
TP702	B-2
TP703	D-1
TP704	D-2
TPG201	H-5
TPG501	F-2
TPG502	D-5
SWITCH	
SW201	H-4
SW701	E-1

ADDRESS INFORMATION

❷ LOCATION OF TEST POINTS & CONTROLS (B1, SENC)

P.C. Board Location

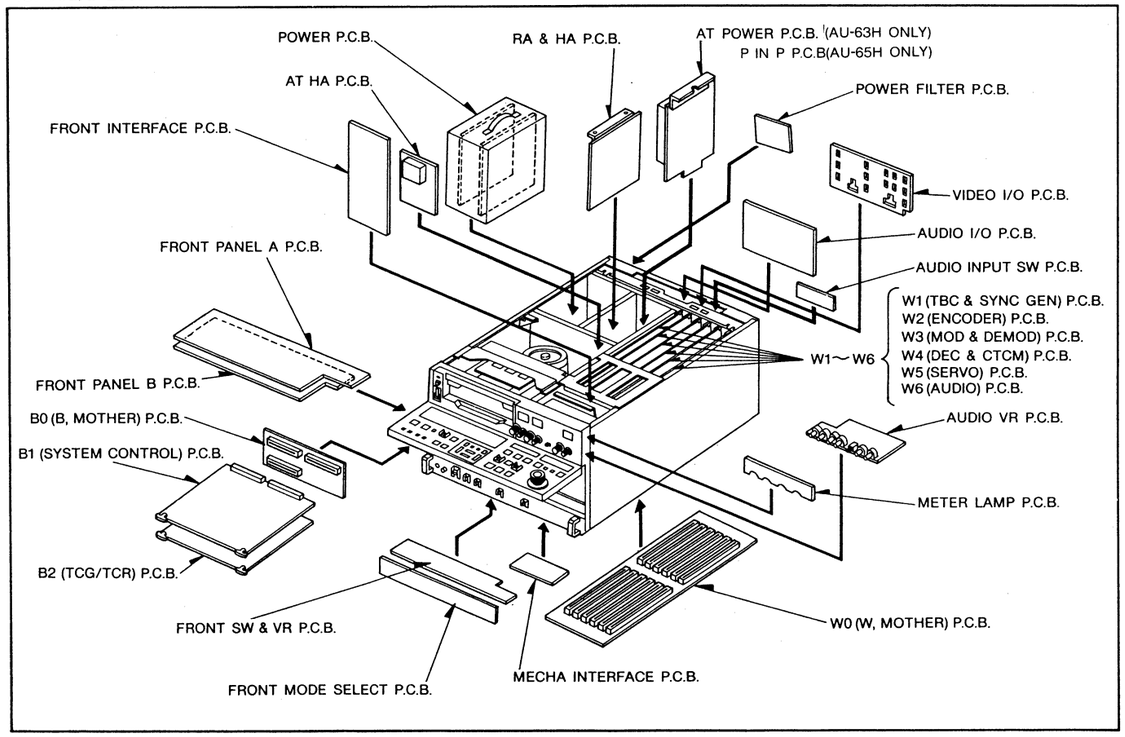

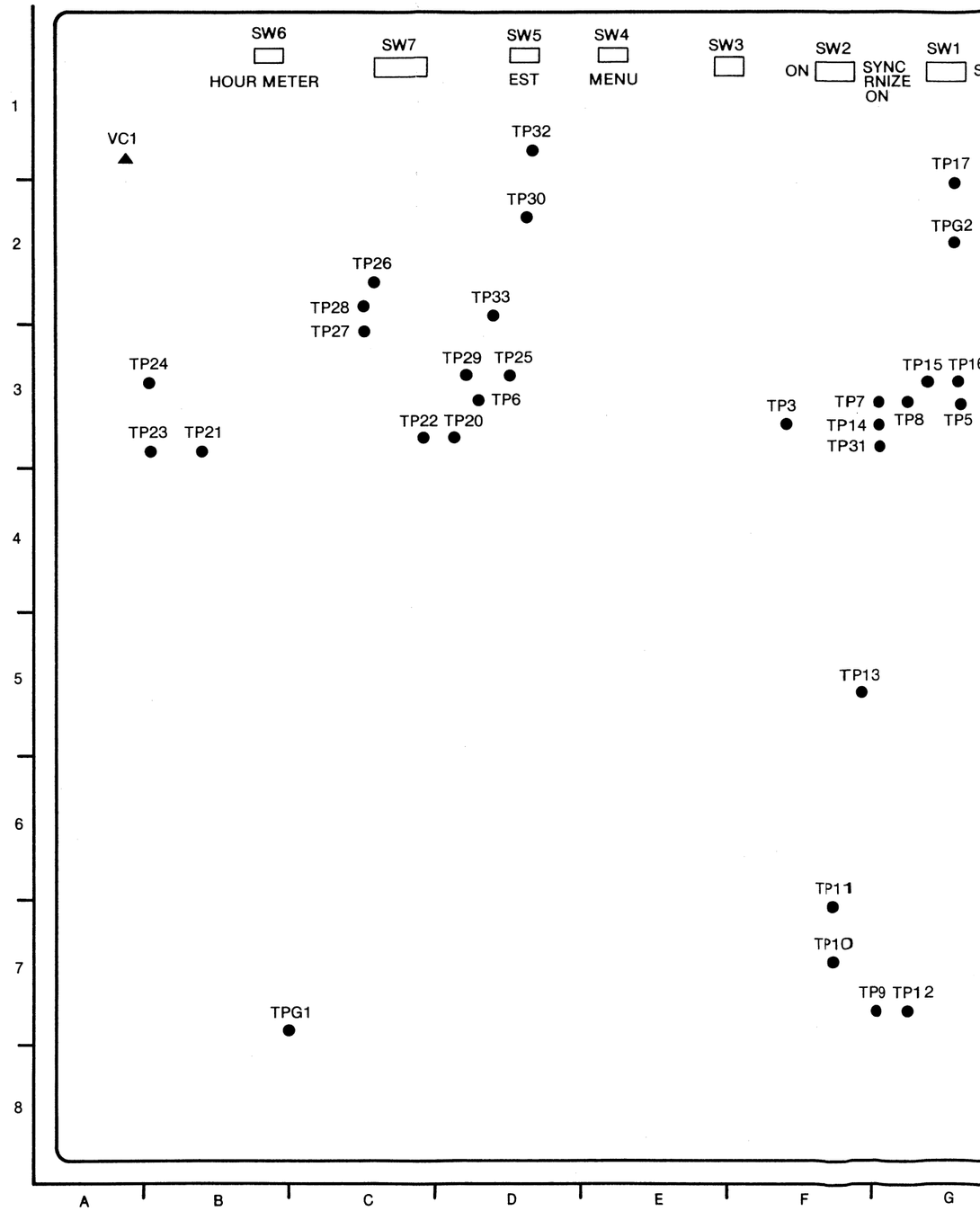

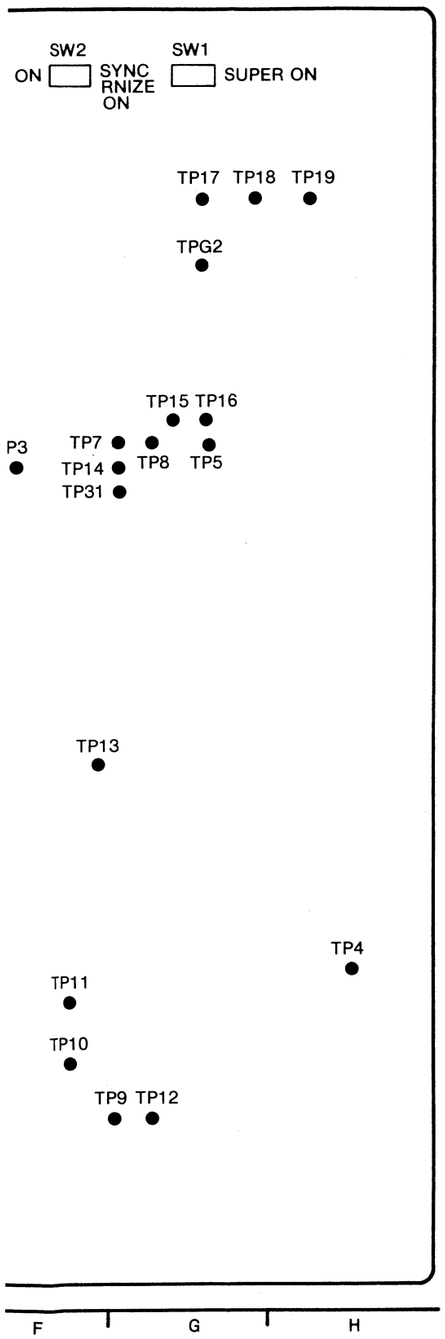

AU-65H B1 SYSTEM CONTROL	
ADJUSTMENT	
VC1	A-1
TESTPOINT	
TP3	F-3
TP4	H-6
TP5	G-3
TP6	D-3
TP7	G-3
TP8	G-3
TP9	G-7
TP10	F-7
TP11	F-7
TP12	G-7
TP13	F-5
TP14	G-3
TP15	G-3
TP16	G-3
TP17	G-2
TP18	G-2
TP19	H-2
TP20	D-3
TP21	B-3
TP22	C-3
TP23	B-3
TP24	B-3
TP25	D-3
TP26	C-2
TP27	C-3
TP28	C-2
TP29	D-3
TP30	D-2
TP31	G-3
TP32	D-1
TP33	D-2
TPG1	C-7
TPG2	G-2
SWITCH	
SW1	G-1
SW2	F-1
SW3	F-1
SW4	E-1
SW5	D-1
SW6	A-1
SW7	C-1

ADDRESS INFORMATION

SENC & P IN P P.C.B.

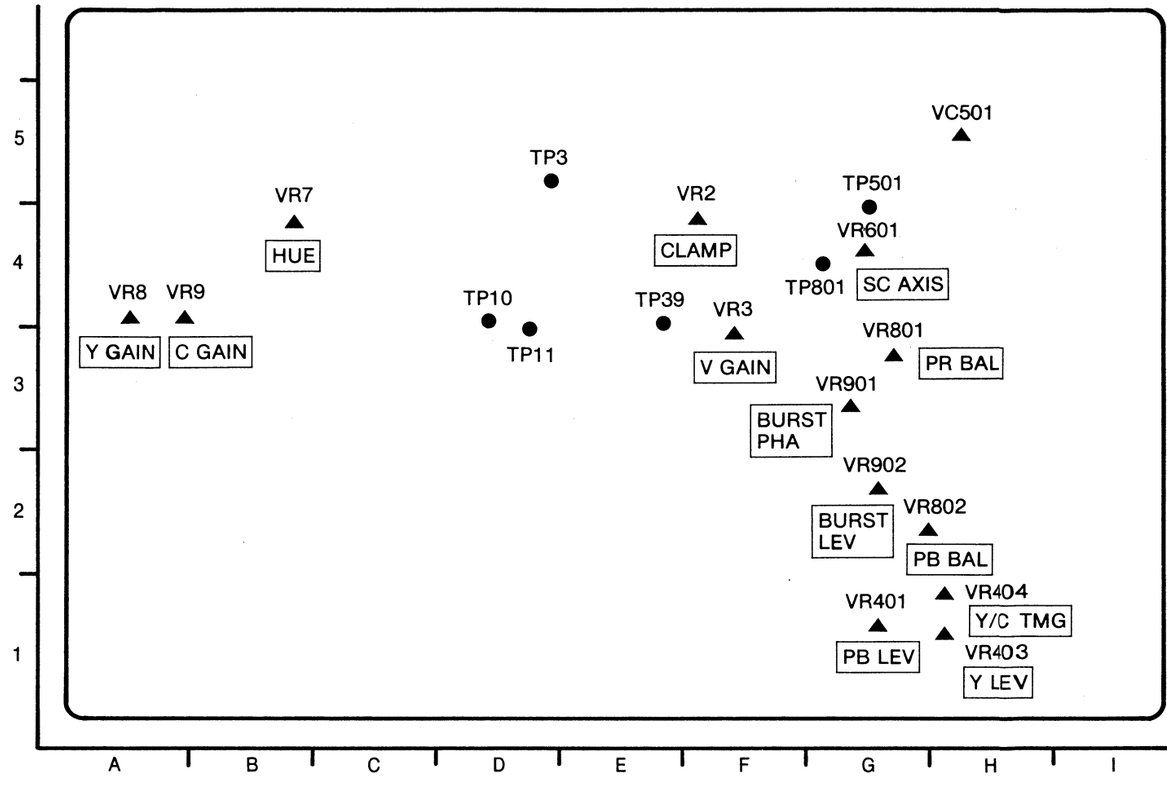

AU-65H SENC & P IN P			
ADJUSTMENT		VR802	H-2
AC501	H-5	VR901	G-3
VR2	F-4	VR902	G-2
VR3	F-3	**TESTPOINT**	
VR7	B-4	TP3	E-5
VR8	A-4	TP10	D-4
VR9	A-4	TP11	D-4
VR401	G-1	TP39	E-4
VR403	H-1	TP501	G-5
VR404	H-1	TP801	G-4
VR601	G-4		
VR801	G-3		

ADDRESS INFORMATION

❸ LOCATION OF TEST POINTS & CONTROLS (FRONT A,B) (VIDEO I/O)

P.C. Board Location

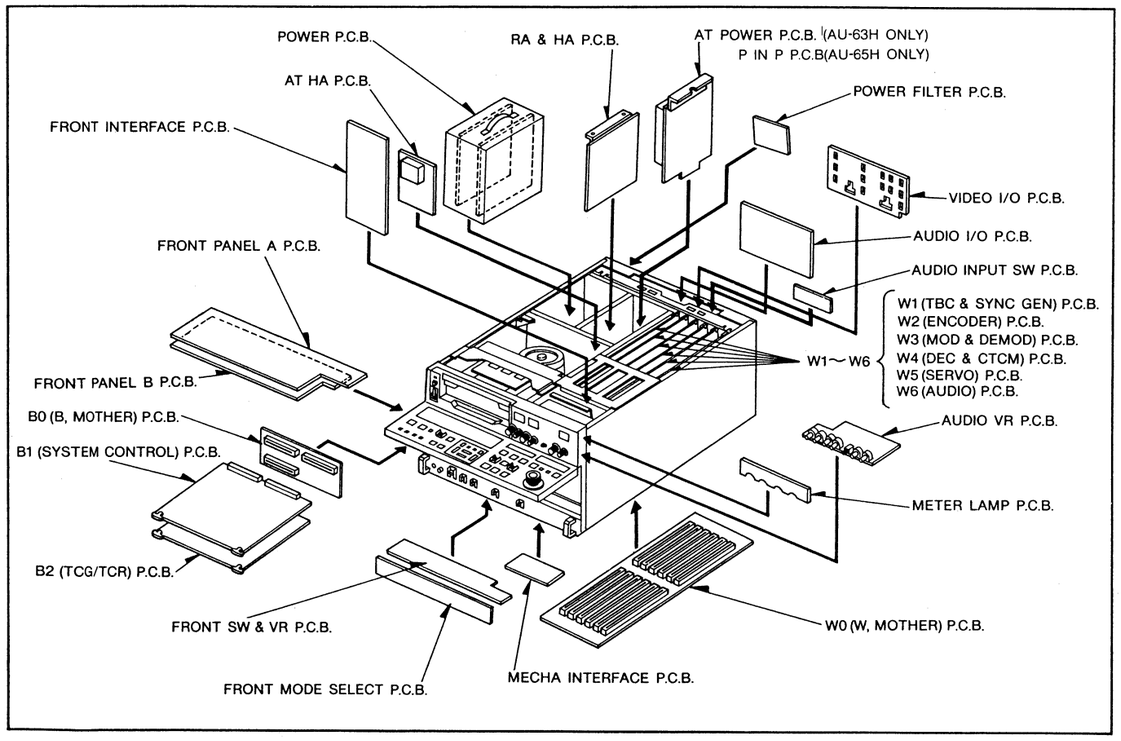

FRONT PANEL A P.C.B

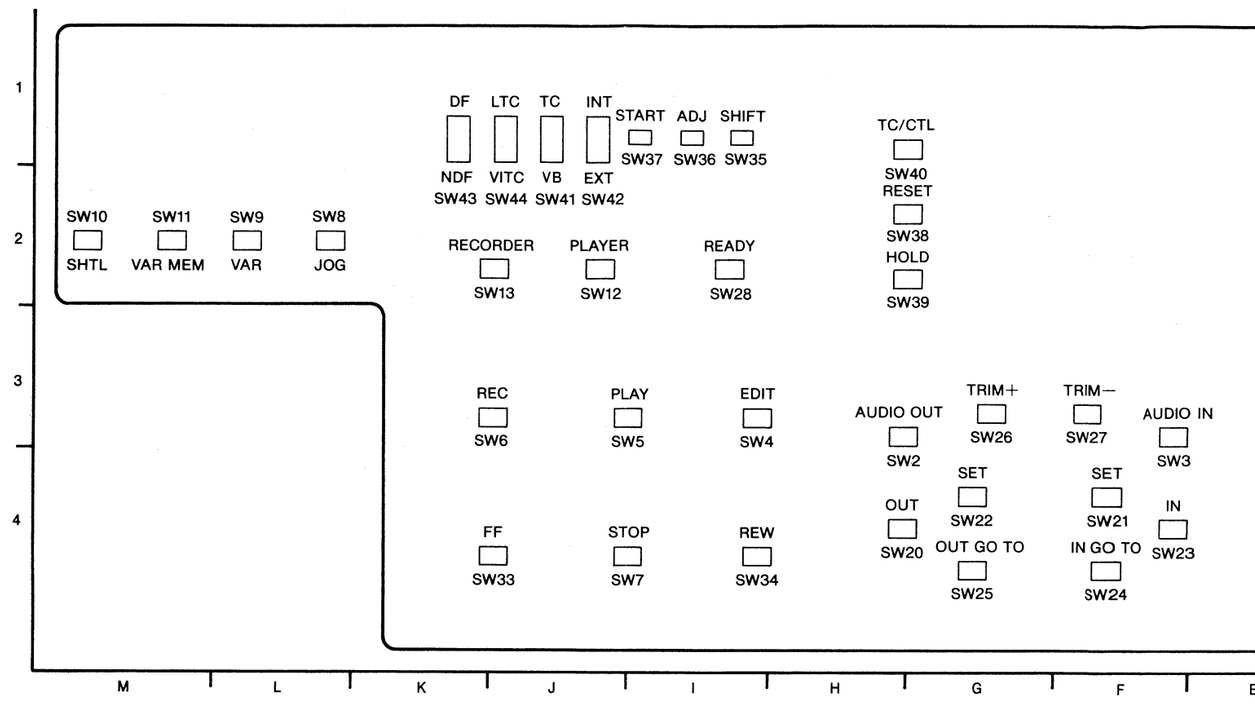

FRONT PANEL B P.C.B

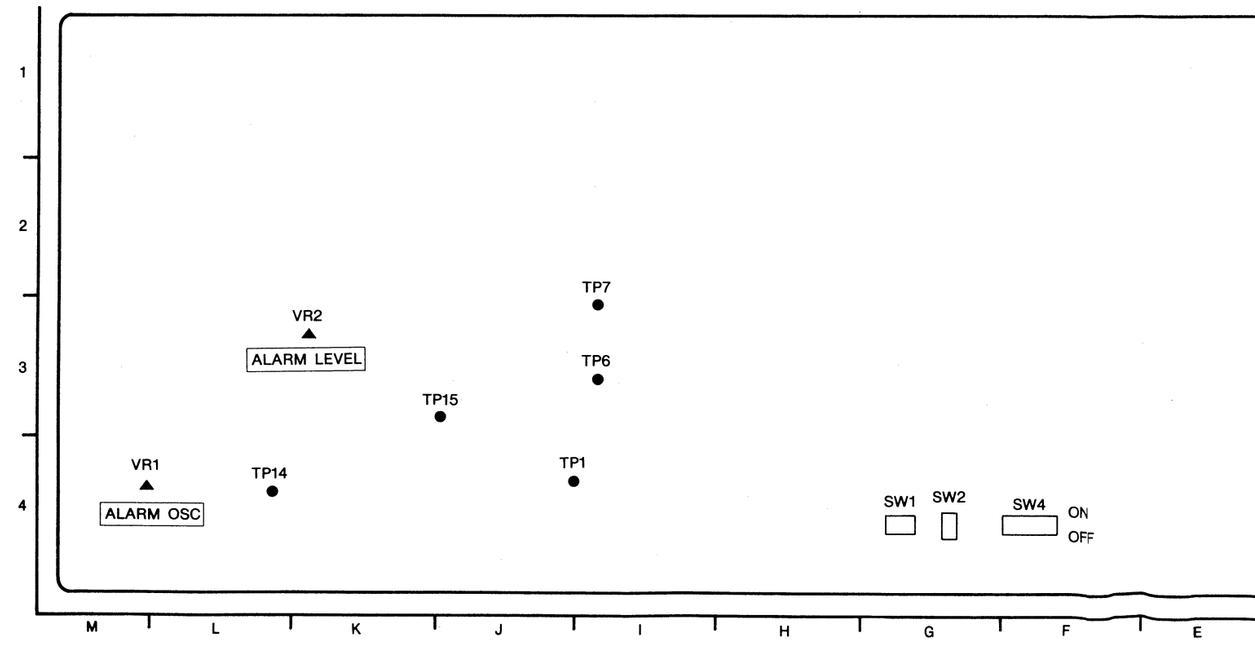

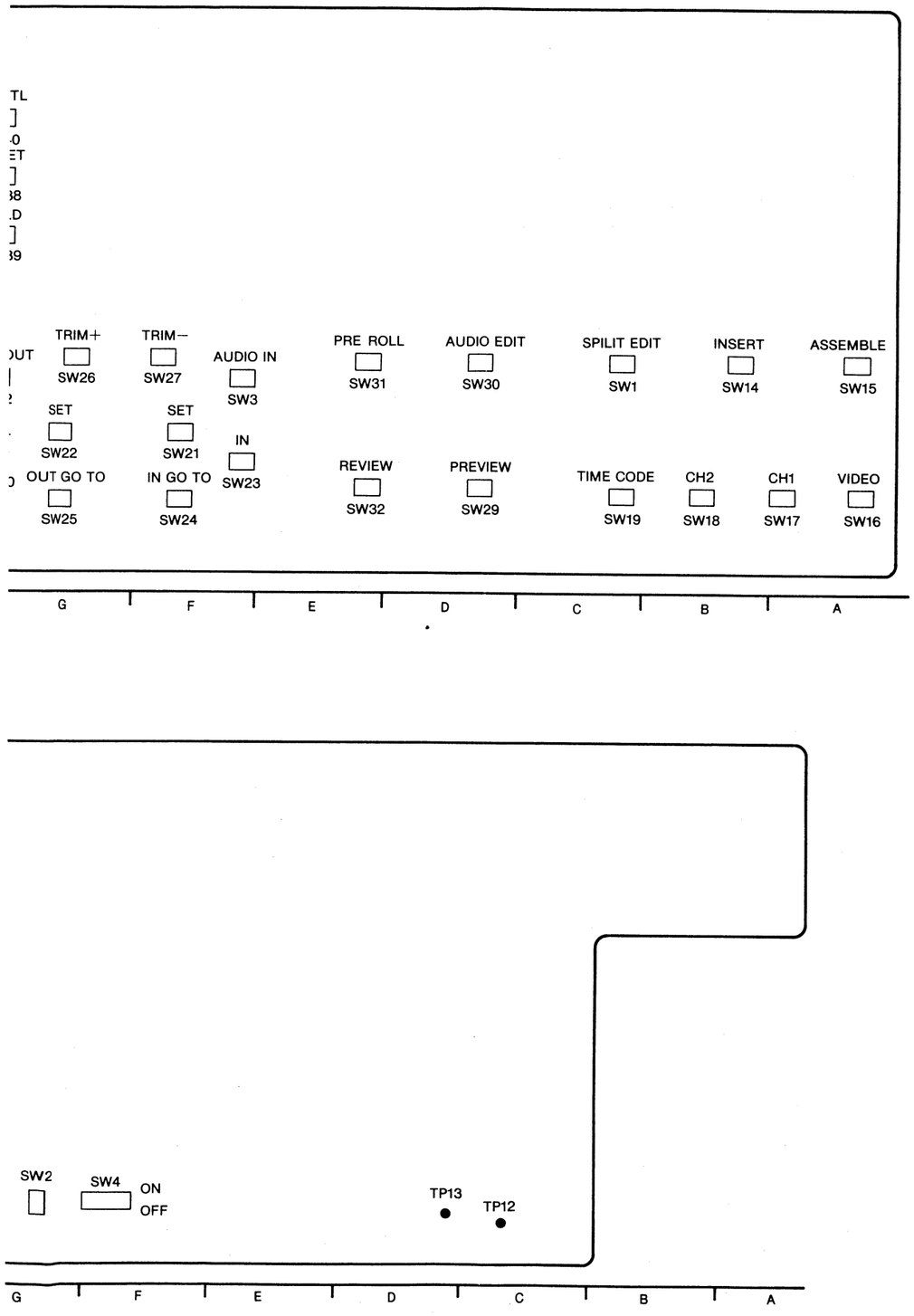

AU-65H FRONT PANEL A	
SWITCH	
SW1	C-3
SW2	H-3
SW3	F-3
SW4	I-3
SW5	J-3
SW6	K-3
SW7	J-4
SW8	L-2
SW9	L-2
SW10	M-2
SW11	M-2
SW12	J-2
SW13	K-2
SW14	B-3
SW15	A-3
SW16	A-4
SW17	A-4
SW18	B-4
SW19	C-4
SW20	H-4
SW21	F-4
SW22	G-4
SW23	F-4
SW24	F-4
SW25	G-4
SW26	G-3
SW27	F-3
SW28	I-2
SW29	D-4
SW30	D-3
SW31	E-3
SW32	E-4
SW33	J-4
SW34	I-4
SW35	I-1
SW36	I-1
SW37	I-1
SW38	H-2
SW39	H-2
SW40	H-1
SW41	J-1
SW42	J-1
SW43	K-1
SW44	J-1

ADDRESS INFORMATION

AU-65H FRONT PANEL B	
ADJUSTMENT	
VR1	M-4
VR2	L-3
TESTPOINT	
TP1	J-4
TP6	J-3
TP7	J-2
TP12	C-4
TP13	D-4
TP14	L-4
TP15	K-3
SWITCH	
SW1	G-4
SW2	G-4
SW4	F-4

ADDRESS INFORMATION

VIDEO I/O P.C.B

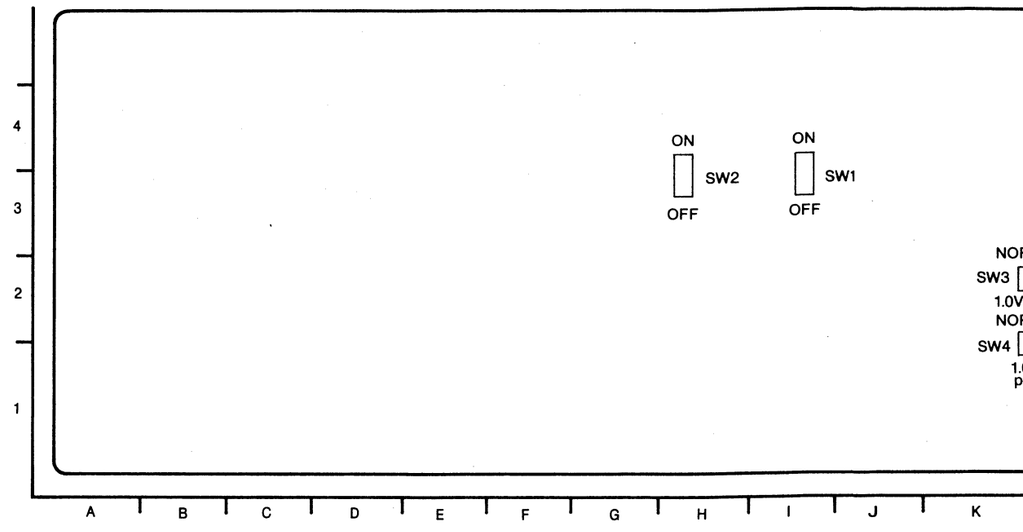

AU-65H VIDEO I/O	
SWITCH	
SW1	I-4
SW2	G-4
SW3	K-3
SW4	K-2

ADDRESS INFORMATION

OVER ALL BLOCK DIAGRAM [FOR AU-65H]

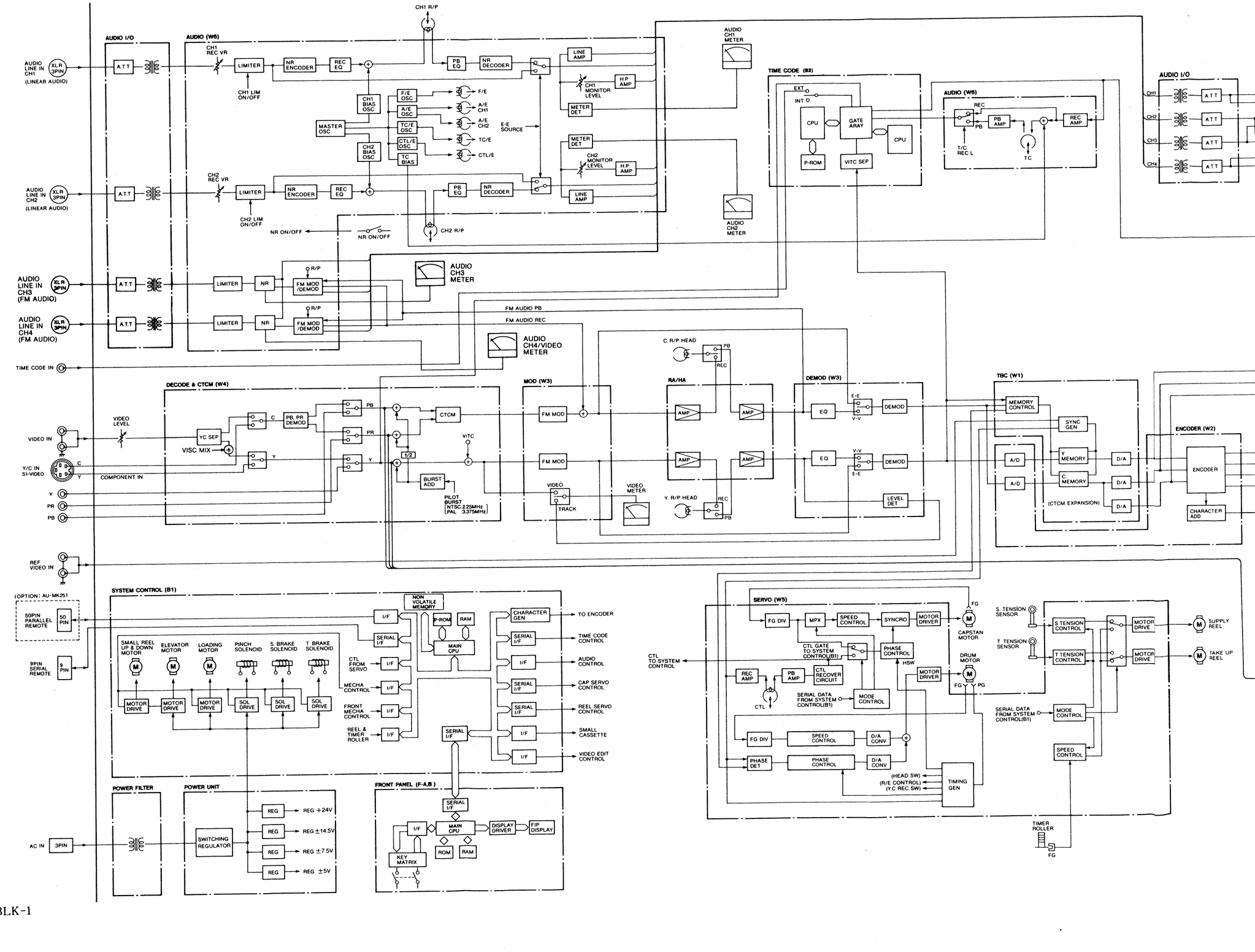

AGRAM [FOR AU-65H]

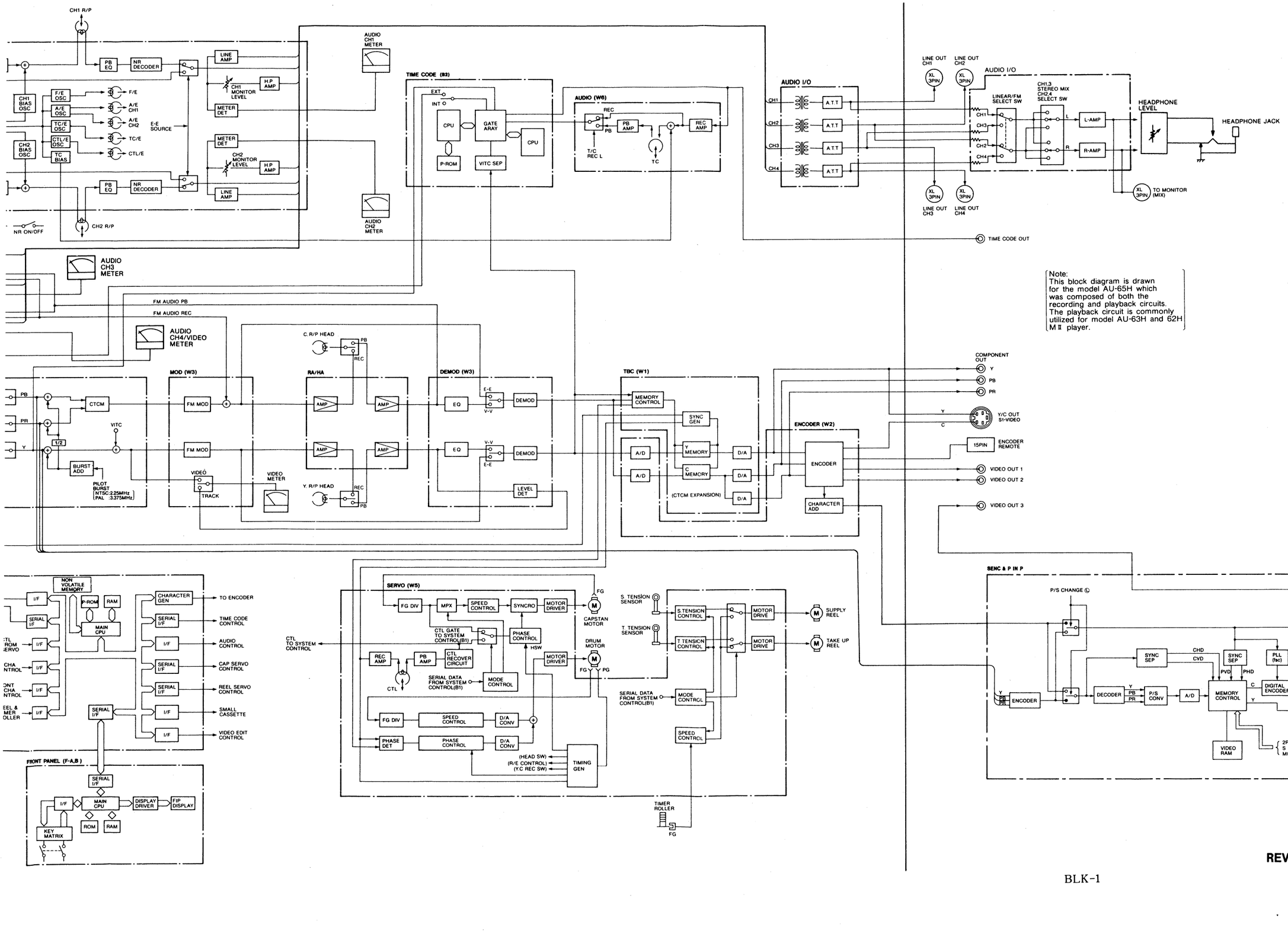

Note:
This block diagram is drawn for the model AU-65H which was composed of both the recording and playback circuits. The playback circuit is commonly utilized for model AU-63H and 62H M II player.

REVERSE SIDE TBC & SYNC BLOCK DIAG

W1(TBC & SYNC GEN) BLOCK DIAGRAM 1/3 (FIELD TBC SECTION) [FOR NTSC]

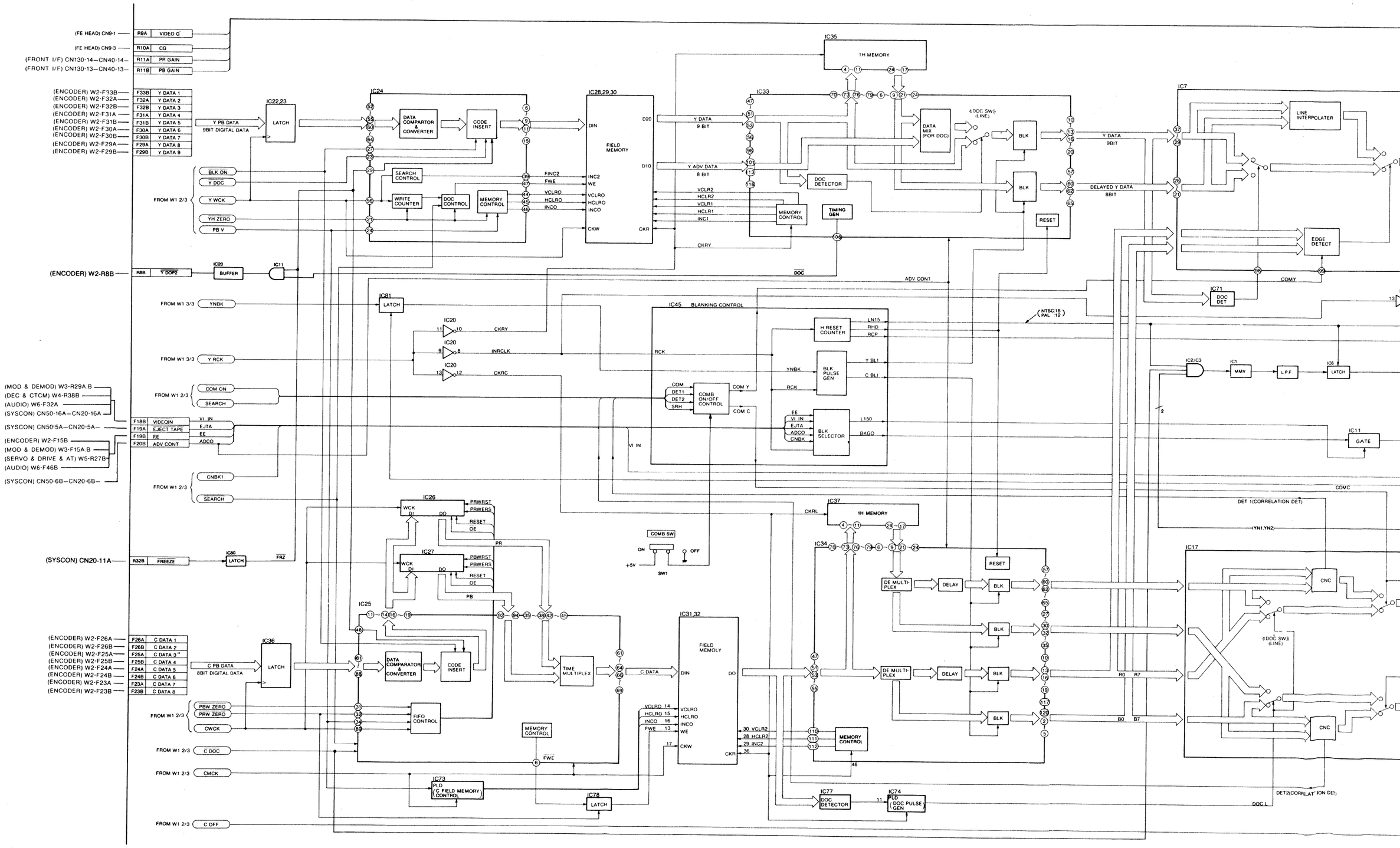

1/3 (FIELD TBC SECTION) [FOR NTSC]

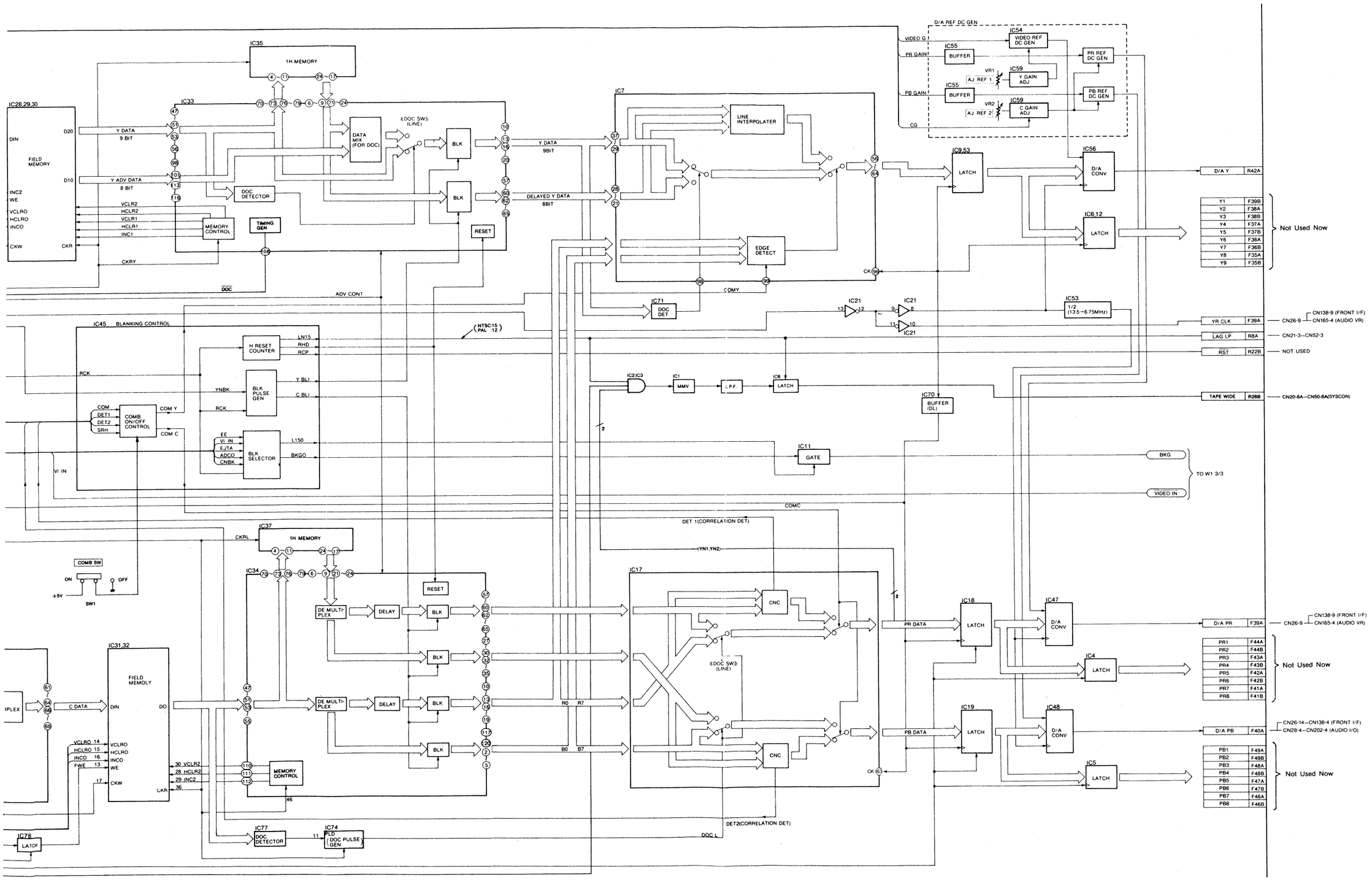

W1(TBC & SYNC GEN) BLOCK DIAGRAM 1/3(FIELD TBC SECTION) [FOR PAL]

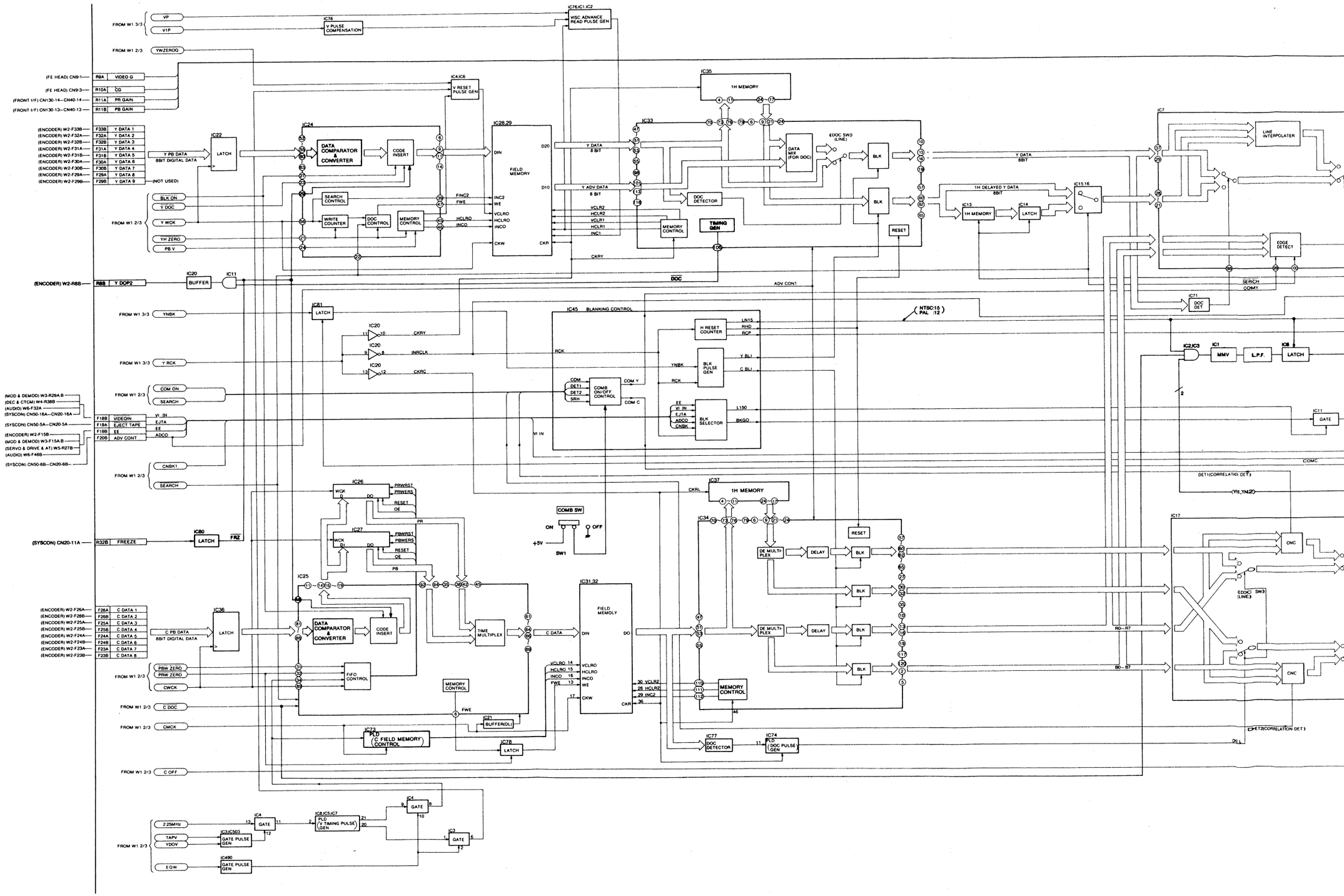

iRAM 1/3(FIELD TBC SECTION)[FOR PAL]

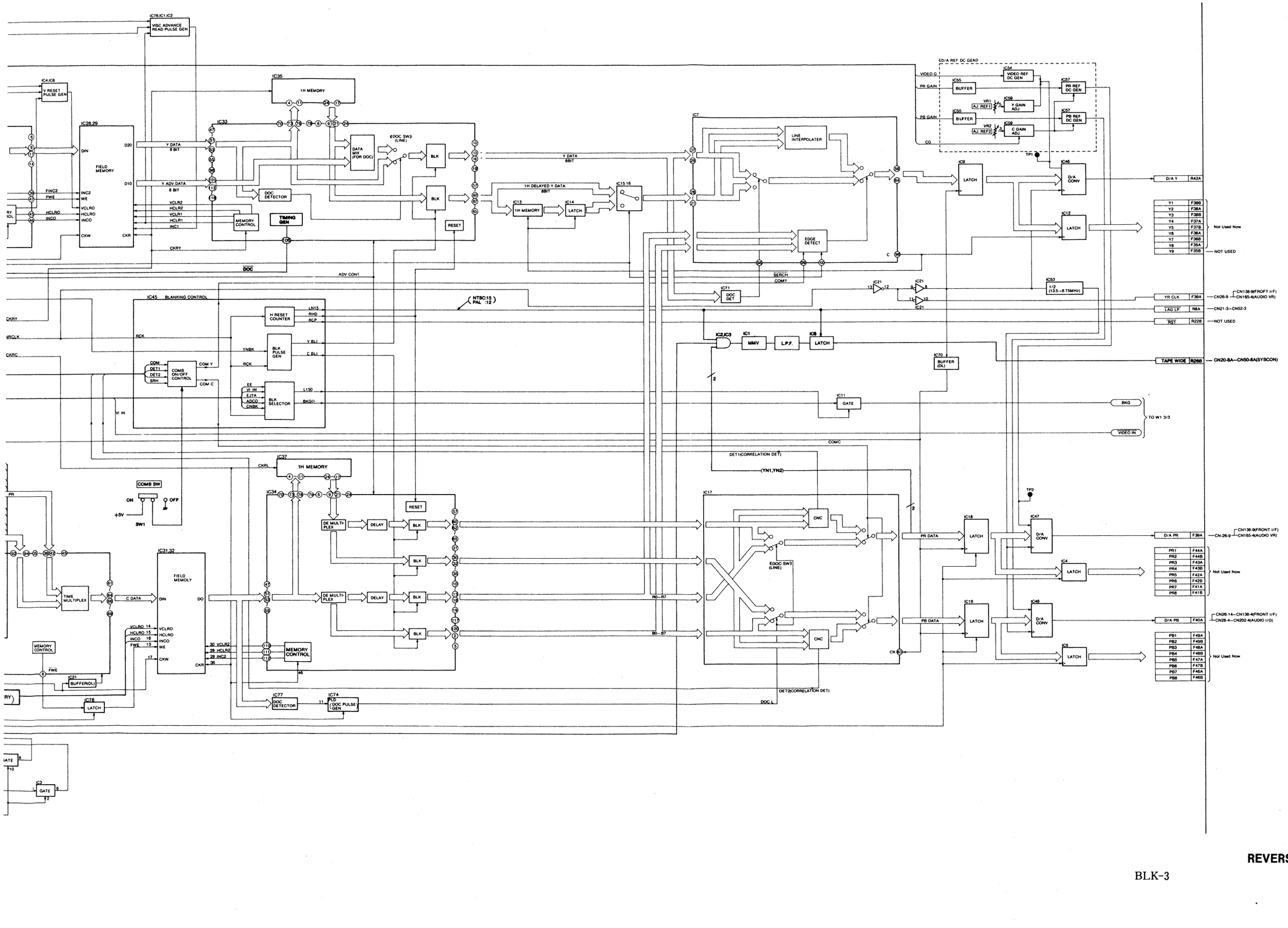

W1(TBC & SYNC GEN) BLOCK DIAGRAM 2/3 (WRITE CLOCK GEN SECTION)

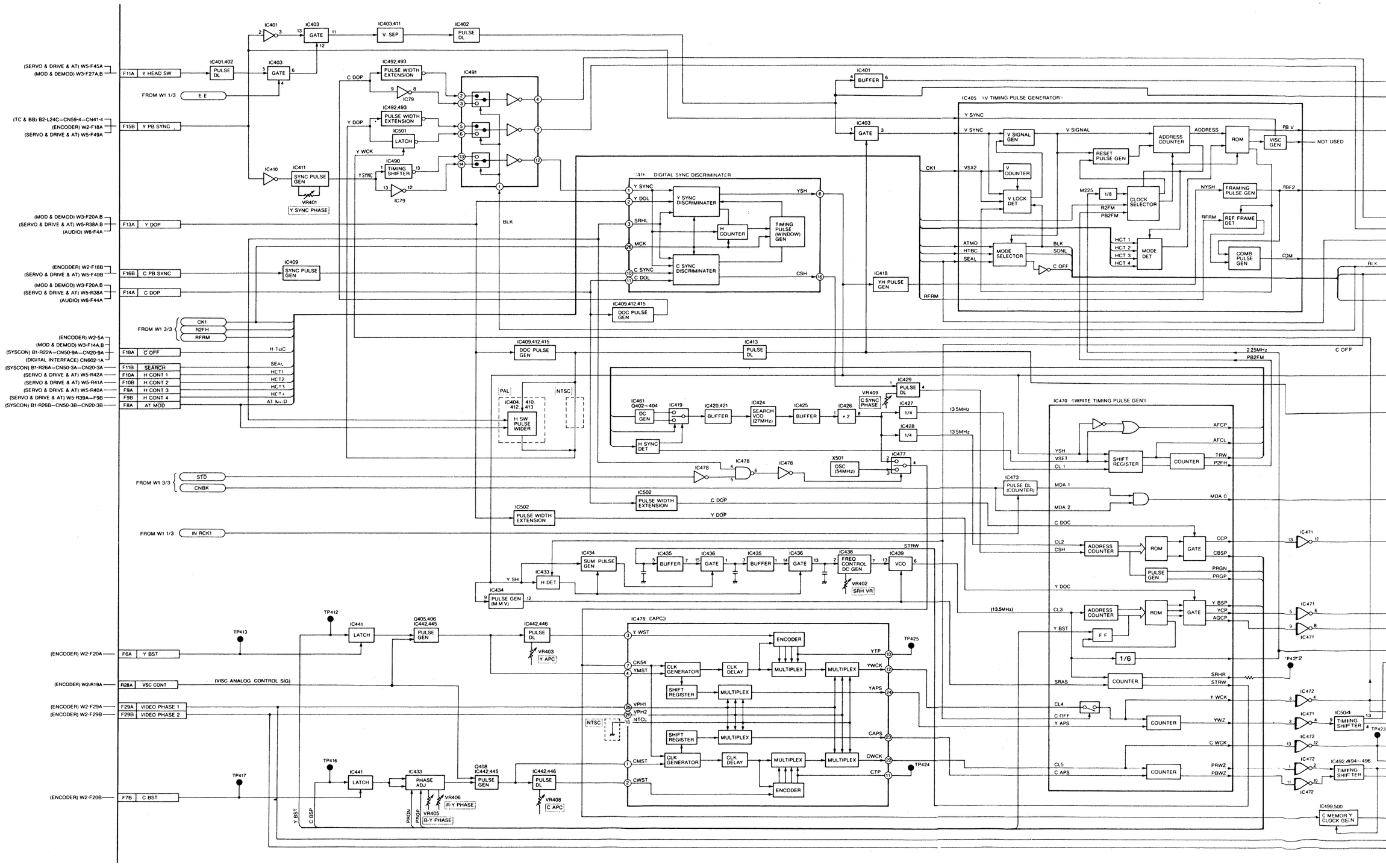

M 2/3 (WRITE CLOCK GEN SECTION)

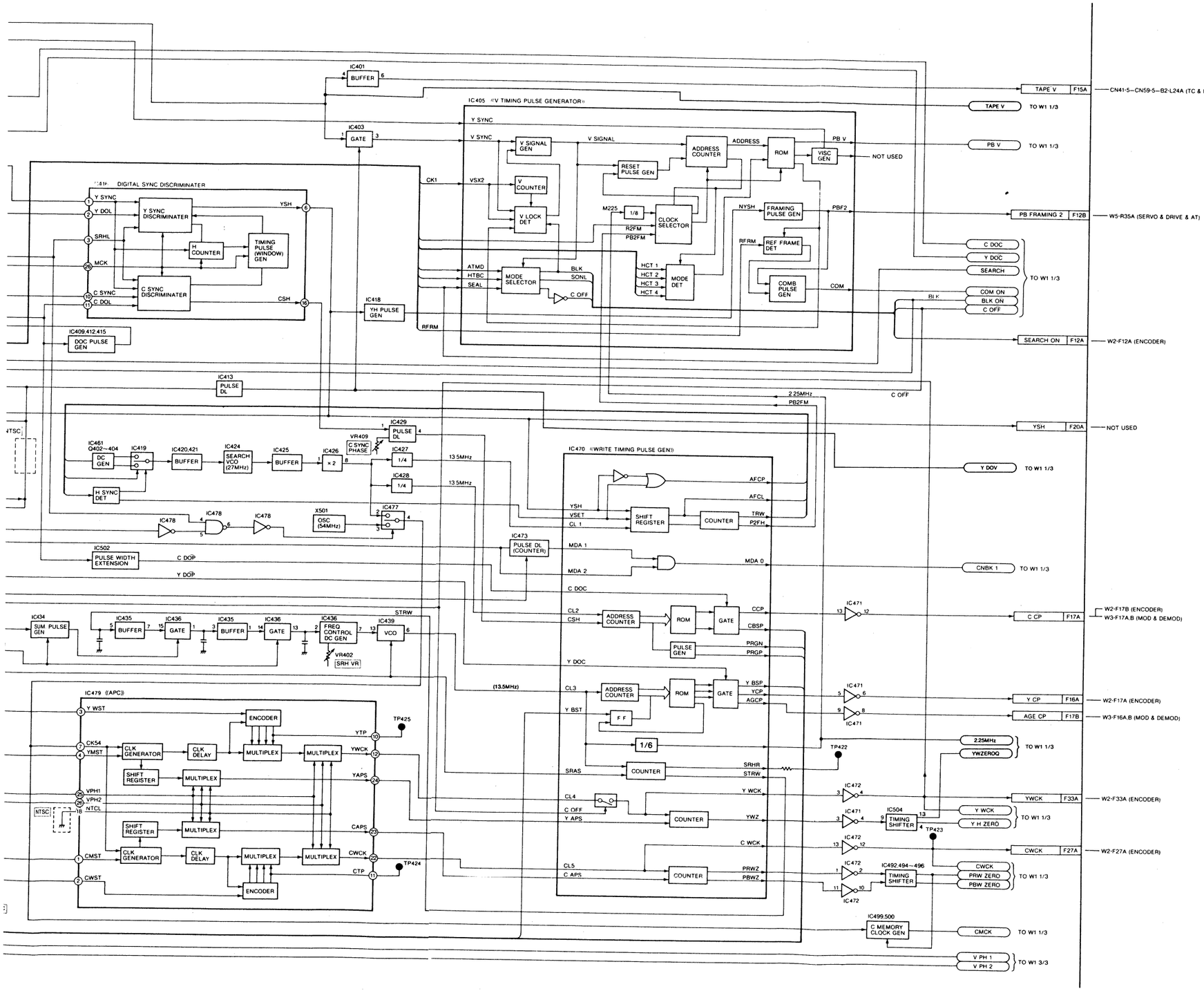

W1(TBC & SYNC GEN) BLOCK DIAGRAM 3/3 (SYNC GEN SECTION)

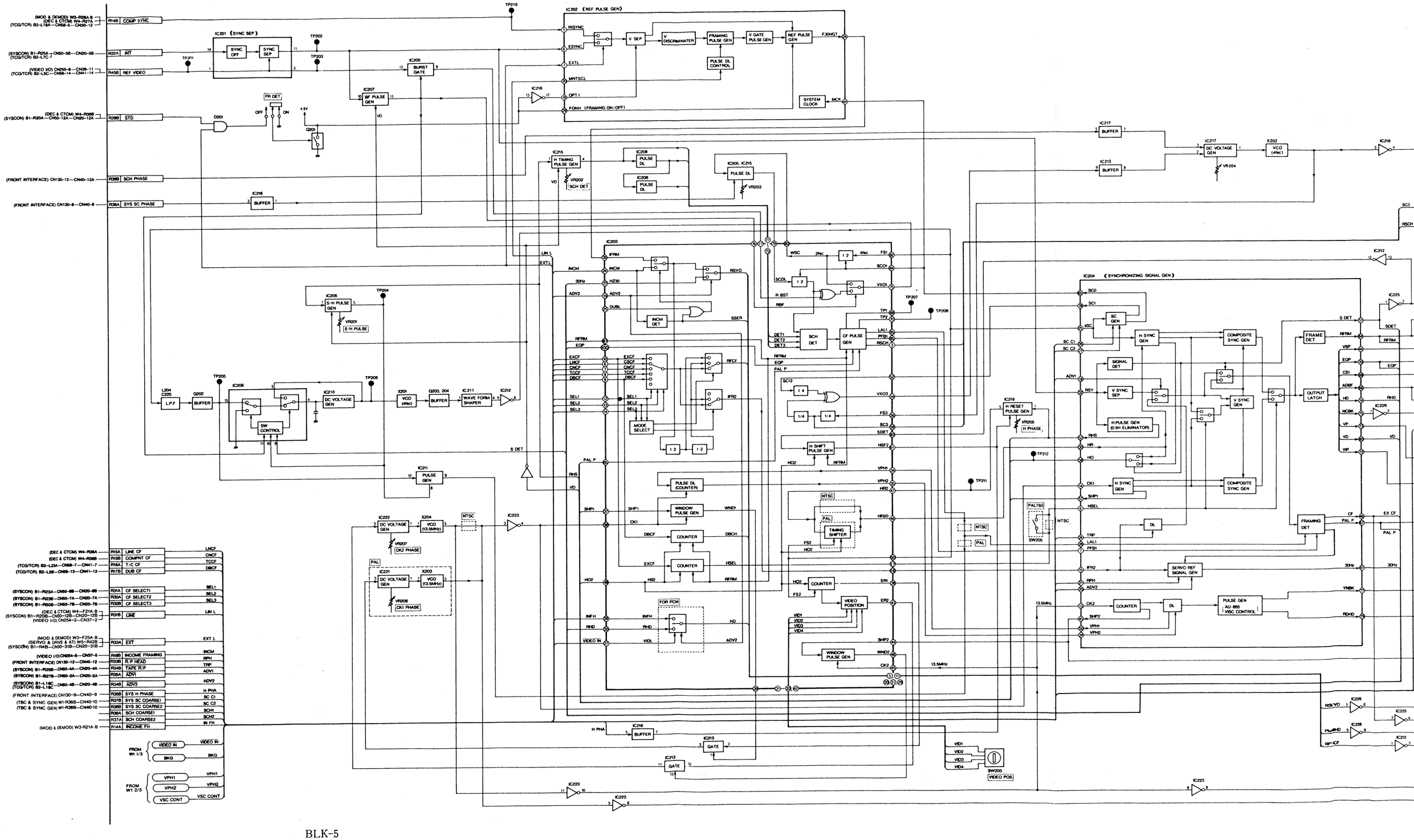

3/3 (SYNC GEN SECTION)

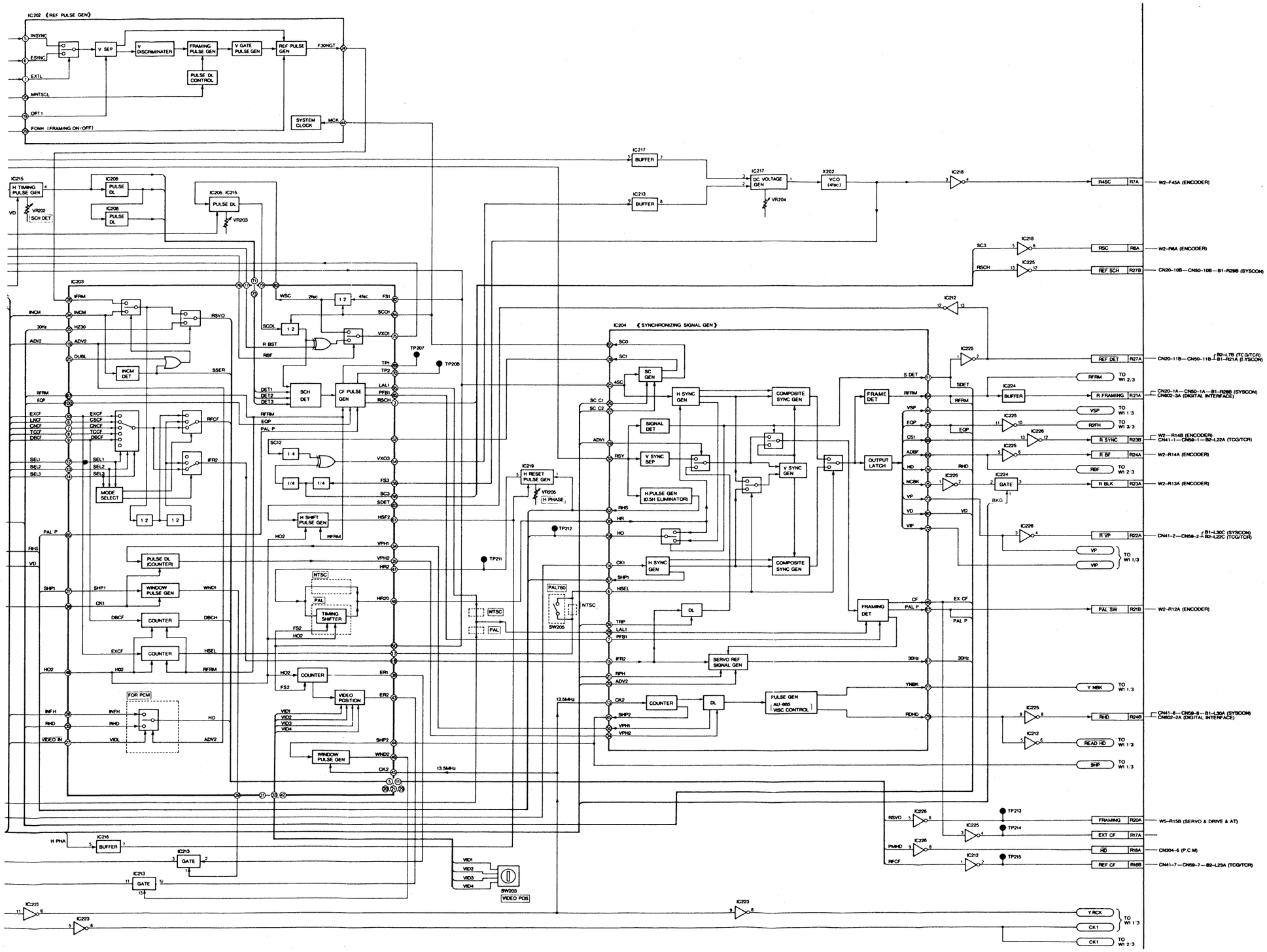

IC203 (μPD65024GF152)

PIN NO.	PIN NAME	IN/OUT	DESCRIPTION	PIN NO.	PIN NAME	IN/OUT	DESCRIPT
3	RSCH	OUT	REFERENCE SCH	45	CK2	IN	CLOCK 2
5	DBCH	OUT	DUB COLOR FRAMING IN HIGH	46	WND2	OUT	WINDOW 2
6	OSCF	IN	COMPO SITE COLOR FRAMING	47	HR2	IN	H RESET 2
7	CNCF	IN	COMPONENT COLOR FRAMING (ID PULSE)	48	HR20	OUT	H RESET 2 OUTPUT
8	TCCF	IN	TIME CODE COLOR FRAMING	49	HO2	IN	HO SIGNAL (IC204 5 NO. 2
9	DBCF	IN	DUB COLOR FRAMING	50	FS2	IN	FOUR SUB CARRIER (4 FSC)
10	EXCF	IN	EXTERNAL COLOR FRAMING	52	SCI2	IN	SC1 (IC204 78P) INP
11	RFCF	OUT	REFERENCE COLOR FRAMING FOR SERVO	53	SCH1	IN	SCH COARSE CONT
12	SEL1	IN	COLOR FRAMING SELECTOR SIGNAL	54	VXO3	OUT	CONTROL SIGNAL 3
13	SEL2	IN	COLOR FRAMING SELECTOR SIGNAL	55	SCH2	IN	SCH COARSE CONT
14	SEL3	IN	COLOR FRAMING SELECTOR SIGNAL	56	FS3	IN	FOUR SC NO. 3 (4 F
16	IFR2	OUT	COLOR FRAMING SIGNAL FOR E-E	58	SC3	OUT	SUB CARRIER 3
19	ADV2	IN	ADVANCE 2	60	SCO2	IN	SUB CARRIER O (IC INPUT NO. 2
20	RSVO	OUT	REFERENCE FOR SERVO VO (30Hz)	61	HSF2	OUT	H SHIFT PROTECTI
21	SSER	OUT	IMCM SIGNAL (24P) IN (H)	69	TP1	OUT	TEST POINT 1 (FOR
22	HZ30	IN	30Hz	70	TP2	OUT	TEST POINT 2 (FOR
24	INCM	IN	INCOME 30Hz	71	DET1	IN	DETECTION FOR SU POLARITY (H TIMIN
25	DUBL	IN	DUB LOW	72	DET2	IN	DETECTION FOR SU POLARITY (H TIMIN
26	IFRM	IN	INCOME FRAME (REF 30Hz)	73	DET3	IN	DETECTION FOR SU POLARITY (H TIMIN
27	VIDL	IN	DELAYED VERTICAL INTERVAL	74	PALP	IN	PAL PULSE
28	INFH	IN	INCOME FRAMING	75	VXO1	OUT	CONTROL SIGNAL 1
29	HD	OUT	HORIZONTAL DRIVE PULSE	76	RBF	IN	REFERENCE VIDEO
30	RHD	IN	HORIZONTAL DRIVE PULSE (=TBC READ TIMING)	77	RBST	IN	REFERENCE VIDEO
31	VID1	IN	VIDEO φ1	79	SCDL	IN	DELAYED 2FSC
32	VID2	IN	VIDEO φ2	80	WSC	OUT	DOUBLE SUB CARR
33	VID3	IN	VIDEO φ3	81	SELM	IN	SELECT MODE (NTS
34	VPH1	IN	VIDEO PHASE 1	82	FS1	IN	FOUR SUB CARRIE
35	VPH2	OUT	VIDEO PHASE 2	83	SDET	IN	SYNC DETECTION
36	CK1	IN	CLOCK 1	84	SCO1	IN	SUB CARRIER O (IC INPUT NO. 1
37	SHP1	IN	SAMPLE HOLD PULSE 1	85	PFB1	OUT	COLOR FRAMING R (PAL)
38	ER1	OUT	ERROR 1	95	LALI	OUT	COLOR FRAMING R (NTSC)
39	WND1	OUT	WINDOW 1	96	CF1	IN	COLOR FRAMING 1
42	VID4	IN	VIDEO φ4	97	RFRM	IN	REFERENCE FRAM
43	ER2	OUT	ERROR 2	100	EQP	IN	EQUALIZING PULSE
44	SHP	IN	SAMPLE HOLD PULSE 2				

IC204 SYNC GEN GATE ARRAY PIN FUNCTION (μPD65040GF144

PIN NO.	PIN NAME	IN/OUT	FUNCTION	PIN NO.	PIN NAME	IN/OUT	FUNCTIO
1	RST	IN	TEST RESET	41	RHS	OUT	REFERENCE H.SYNC
2	VDD	IN	+5V	42	VID	IN	+5V
3	GND			43	GND		
4	MODI	IN	[0] NTSC [1] PAL	44	VIP	OUT	V SEPARATION PULS
5	MOD2	IN	[0] NTSC [1] PAL	45	SHP2	OUT	CK2 SAMPLE & HOL
6	HSEL	IN	H SYNC SELECT	46	CI	OUT	COLOR FRAMING SI
7	PFBW	IN	V-BLK SET (NTSC) COLOR FRANING CONT. (PAL)	47	SSEL	IN	HR ADJUST RANGE
				48	CI2	OUT	COMPOSITE SYNC
8	LSEL	IN	V-SYNC SELECT	49	LPF1	IN	LPF FOR FRAMING
9	CKSW	IN	VIDEO PHASE CLOCK SELECT	50	VIH1	IN	VIDEO PHASE MMV
10	TST1	IN	TEST CONTROL	51	SDET	OUT	REF SYNC DETECT
11	TST2	IN	TEST CONTROL	52	RHS	OUT	REF H SYNC W/O EC
12	BDET	IN	BURST DETECT	53	CLU	OUT	1.125MHz
13	CK2	IN	13.5MHz CLOCK	54	YLU	OUT	2.25MHz
14	CK1	IN	13.5MHz CLOCK	55	CIF	OUT	C BURST FLAG
15	IFR2	IN	INCOME VIDEO FRAMING	56	YIF	OUT	Y BURST FLAG
16	LPF2	IN	LPF FOR FRAMING	57	SHP1	OUT	CK1 SAMPLE & HOL
17	SSER	IN	SOURCE SEARCH 30Hz SELECT	58	HI	OUT	TRAPEZOIDE H PULS
18	PINH	IN	VISC CONTROL ON/OFF	59	IFR1	OUT	IN VIDEO FRAMING
19	ADV1	IN	ADVANCE 1 FOR V_R SELECT	60	RIS	OUT	R-Y (P_R) SYNC
20	ADV2	IN	ADVANCE 2 FOR 30Hz SELECT	61	30HZ	OUT	SERVO CONTROL 30
21	RPH	IN	R/P HEAD SELECT	62	GND		
22	GND			63	VID	IN	+5V
23	VDD	IN	+5V	64	RFRM	OUT	REF FRAMING
24	TRP	IN	TRAPEZOIDE FOR PLL	65	SCI	OUT	SUB CARRIER
26	SCC1	IN	SC PHASE CONTROL	66	ADBF	OUT	ADVANCE BURST FL
27	SCC2	IN	SC PHASE CONTROL	67	PLLP	OUT	PAL PULSE (0.5 fH)
28	LAL1	IN	COLOR FRAMING RESET	68	CIBK	OUT	CHROMA DIGITAL BL
29	IVS	IN	INCOME VIDEO V SYNC	69	CII	OUT	COMP SYNC
30	HR	IN	H.SYNC RESET	70	EQP	OUT	EQUALIZER PULSE
31	ISY	IN	IN VIDEO COMP SYNC	71	BI	OUT	BURST FLAG
32	RSY	IN	REF VIDEO COMP SYNC	72	VI	OUT	10 LINE PULSE
33	GND			73	VI	OUT	V PULSE
34	VPH2	IN	VIDEO PHASE MMV	74	HI	OUT	HORIZONTAL DRIVE
35	PST1	IN	VISC CONTROL 90° STEP	75	NBK	OUT	COMP BLANKING SI
36	PST2	IN	VISC CONTROL 90° STEP	76	CBK	OUT	COMP BLANKING SI
37	ADS1	IN	ADVANCE SET	77	YBK	OUT	Y DIGITAL BLANKIN
38	ADS2	IN	ADVANCE SET	78	SCI	OUT	SUB CARRIER
39	ADS3	IN	ADVANCE SET	79	RDHD	OUT	TBC READ START
40	ADS4	IN	ADVANCE SET	80	VI	OUT	VERTICAL DRIVE

REVERSE SIDE DEC & CTC BLOCK DI

W4 (DEC & CTCM) BLOCK DIAGRAM 1/4 (CHROMA SEP SECTION) [FOR AU-65H NTSC]

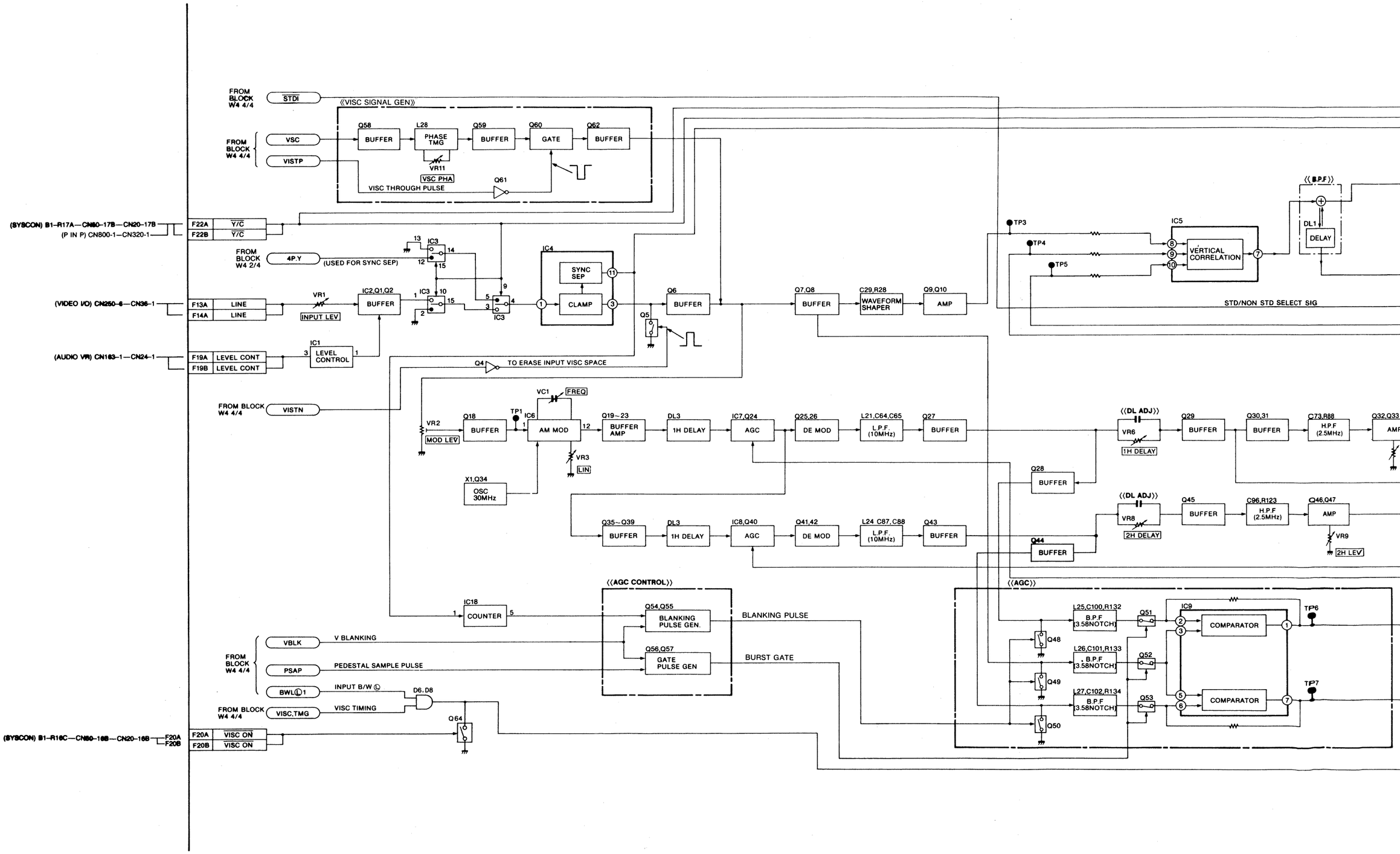

GRAM 1/4 (CHROMA SEP SECTION) [FOR AU-65H NTSC]

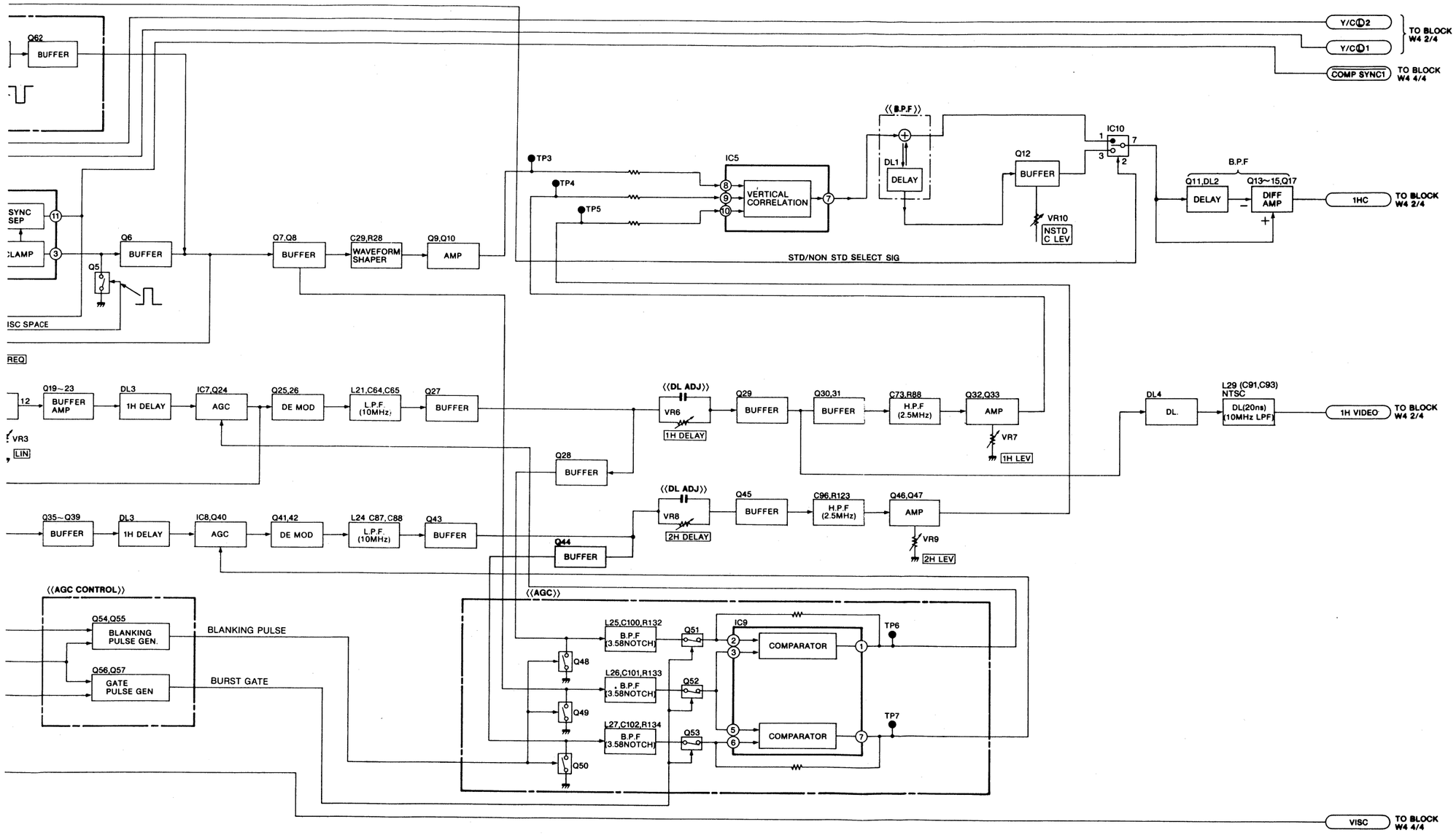

W4 (DEC & CTCM) BLOCK DIAGRAM 2/4 (Y,P_B,P_R DECODER SECTION) [FOR AU-65H NTSC]

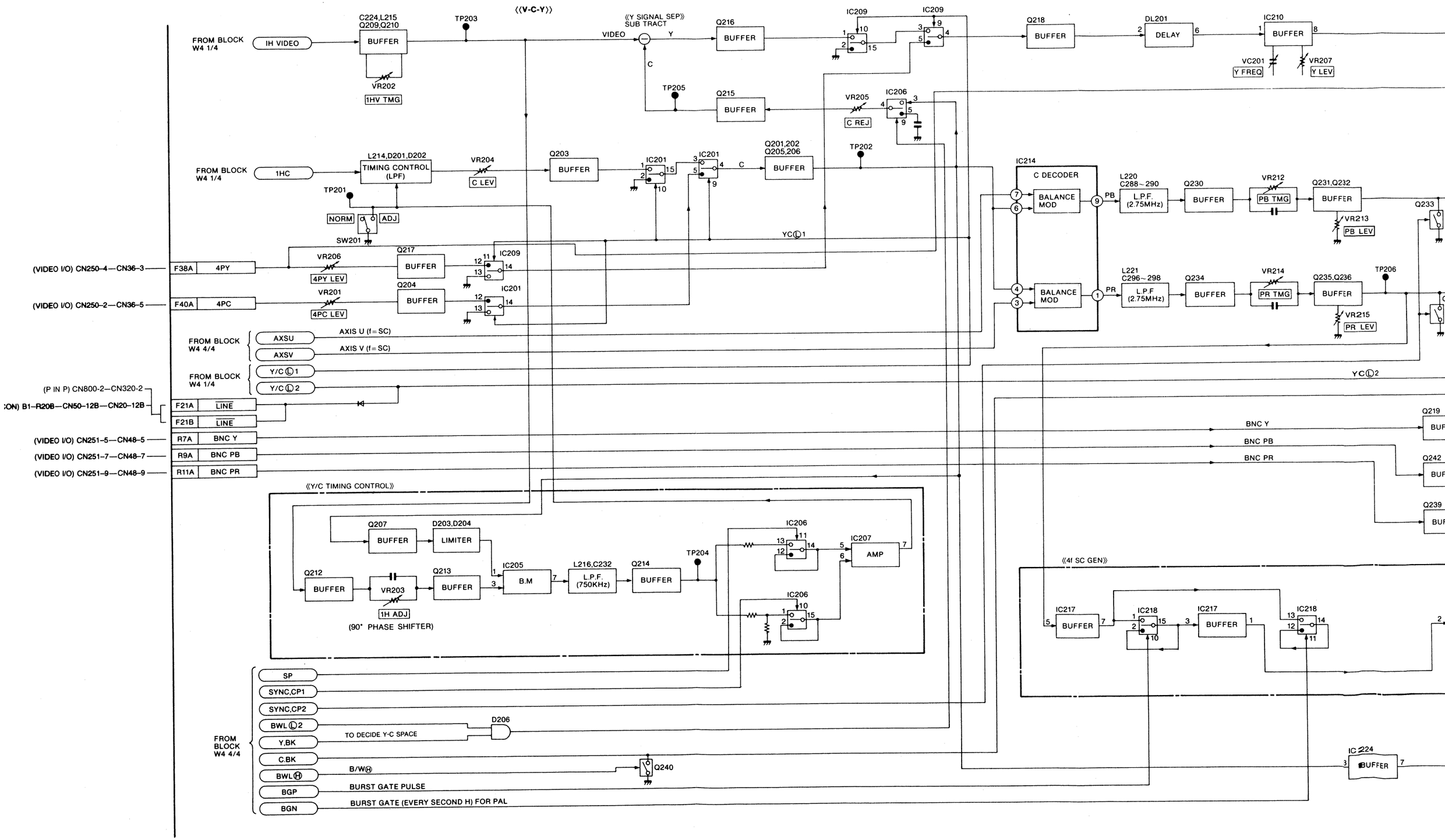

AM 2/4 (Y,P_B,P_R DECODER SECTION) [FOR AU-65H NTSC]

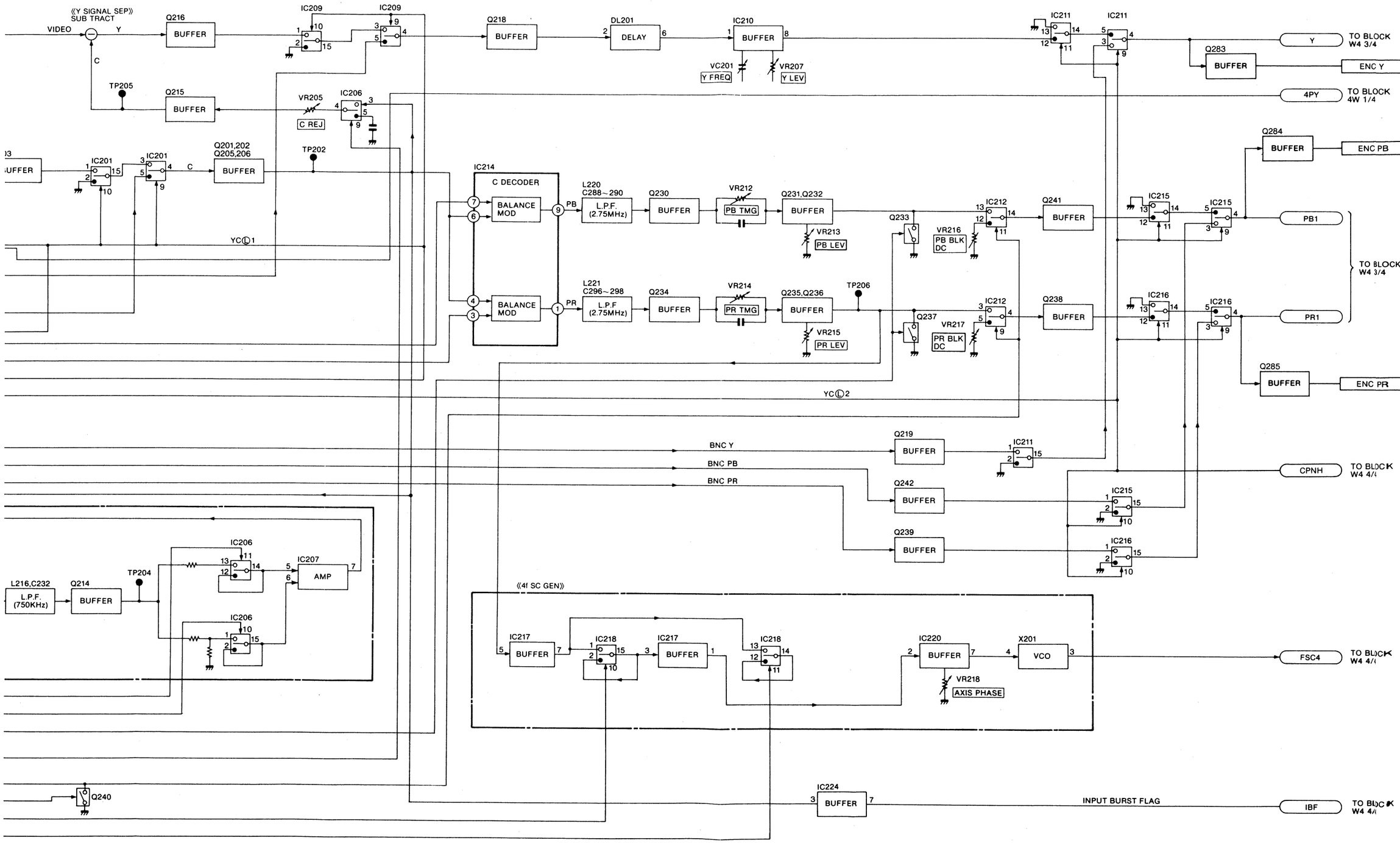

REVERSE SIDE DCE & CT BLOCK DI

W4 (DEC & CTCM) BLOCK DIAGRAM 3/4 (CTCM SECTION) [FOR AU-65H NTSC]

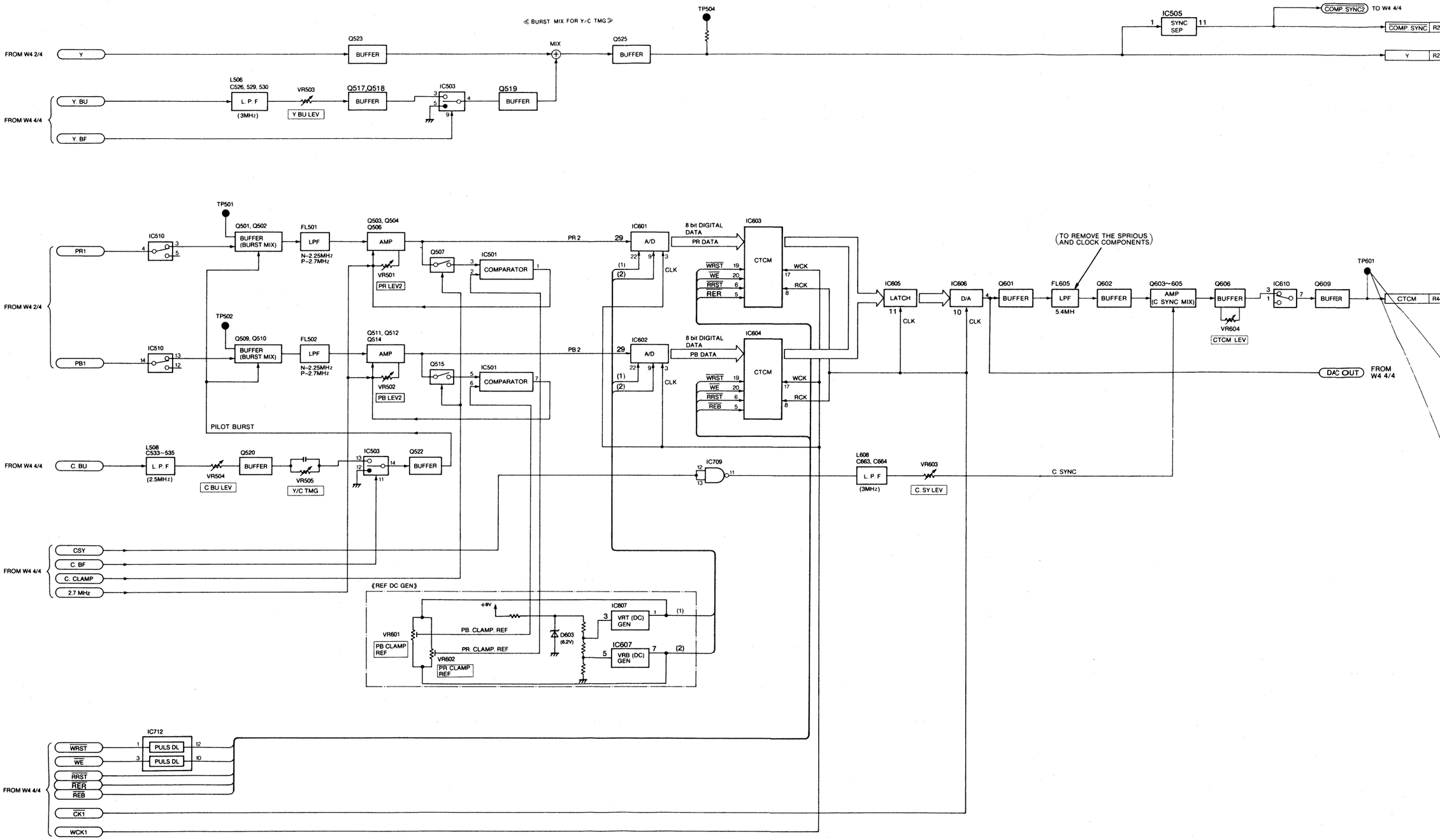

CM SECTION) [FOR AU-65H NTSC]

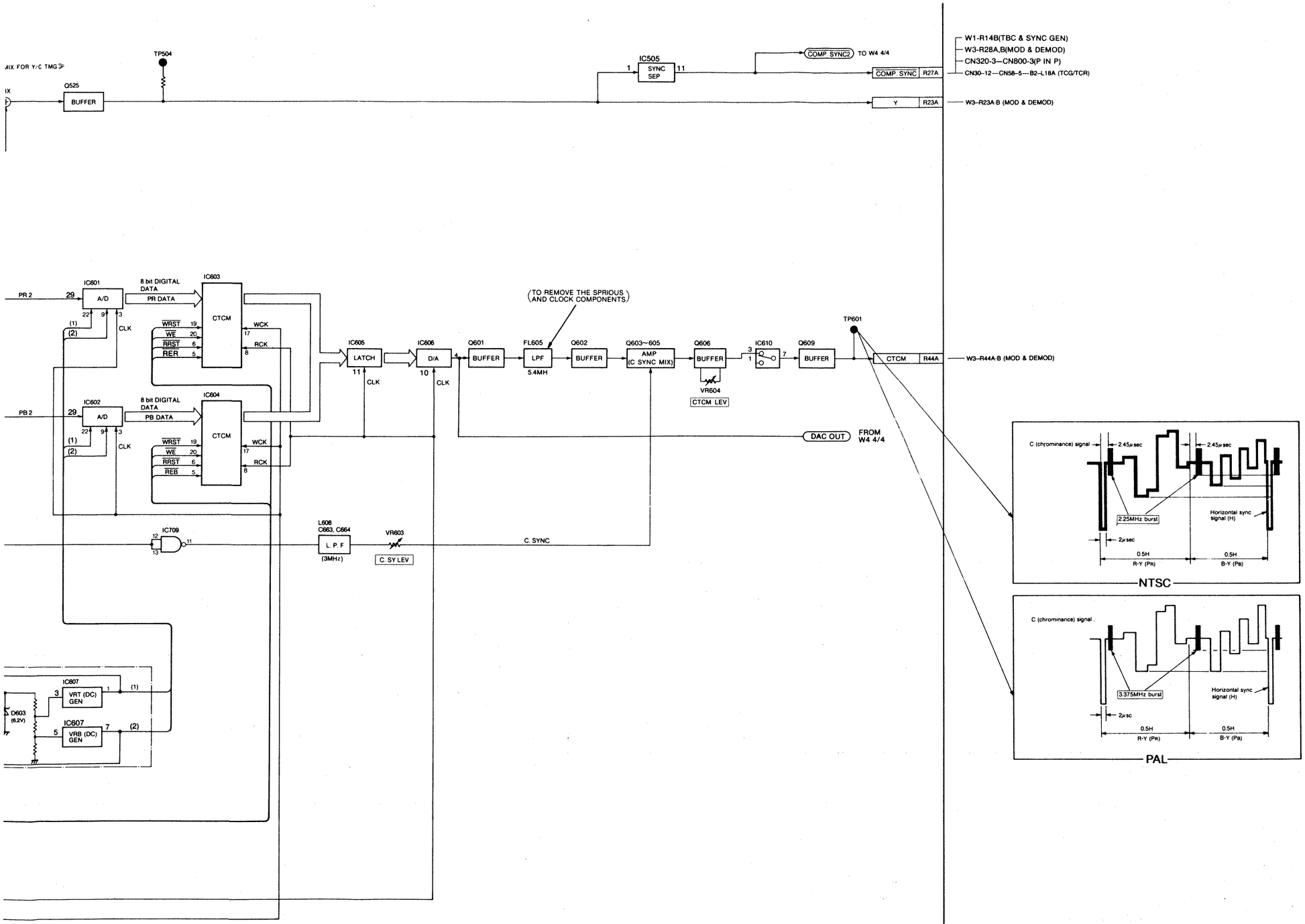

W4 (DEC & CTCM) BLOCK DIAGRAM 4/4 (CONTROL PULSE GENERATION SECTION) [FOR AU-65H NTSC]

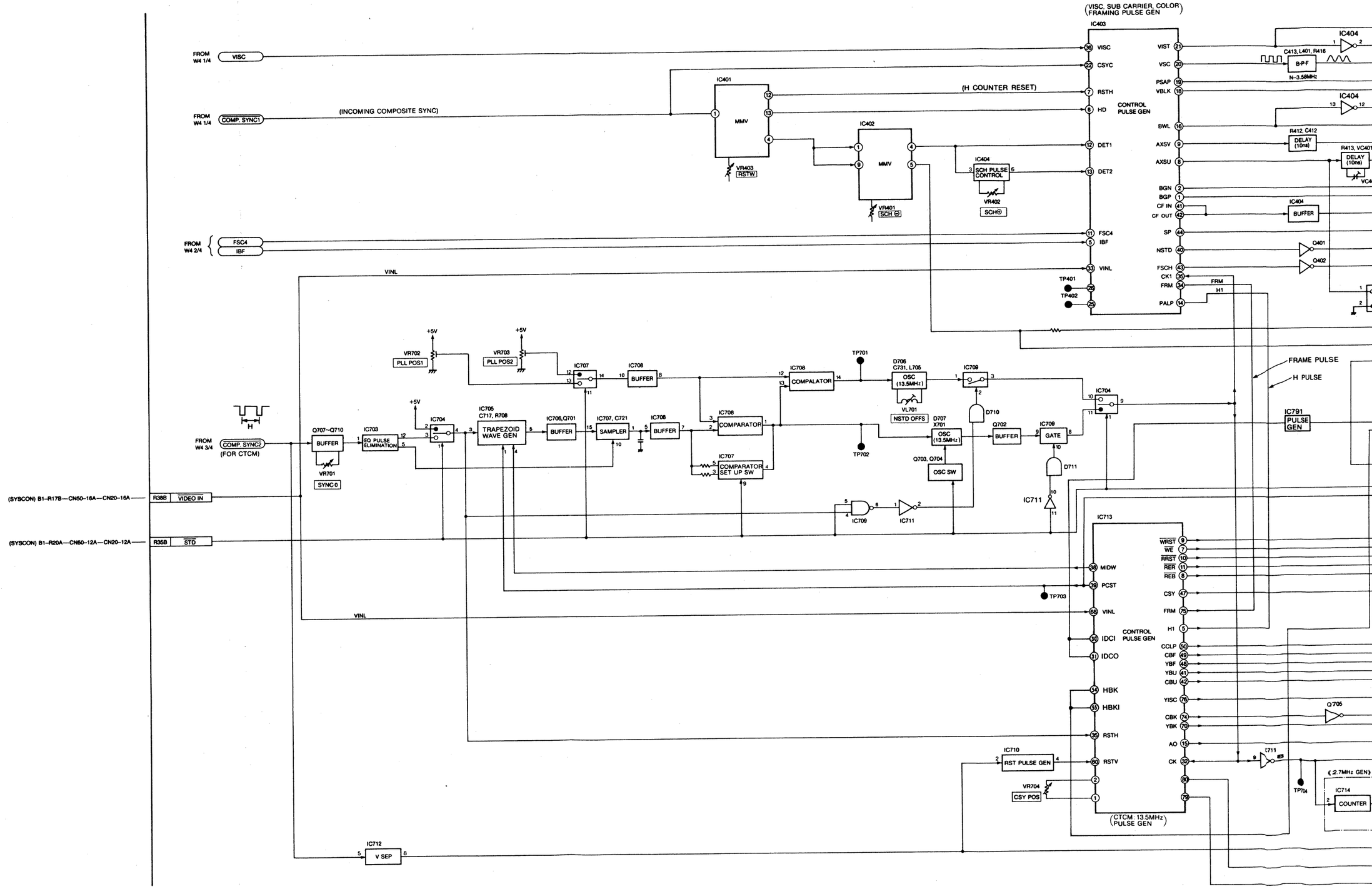

OCK DIAGRAM 4/4 (CONTROL PULSE GENERATION SECTION) [FOR AU-65H NTSC]

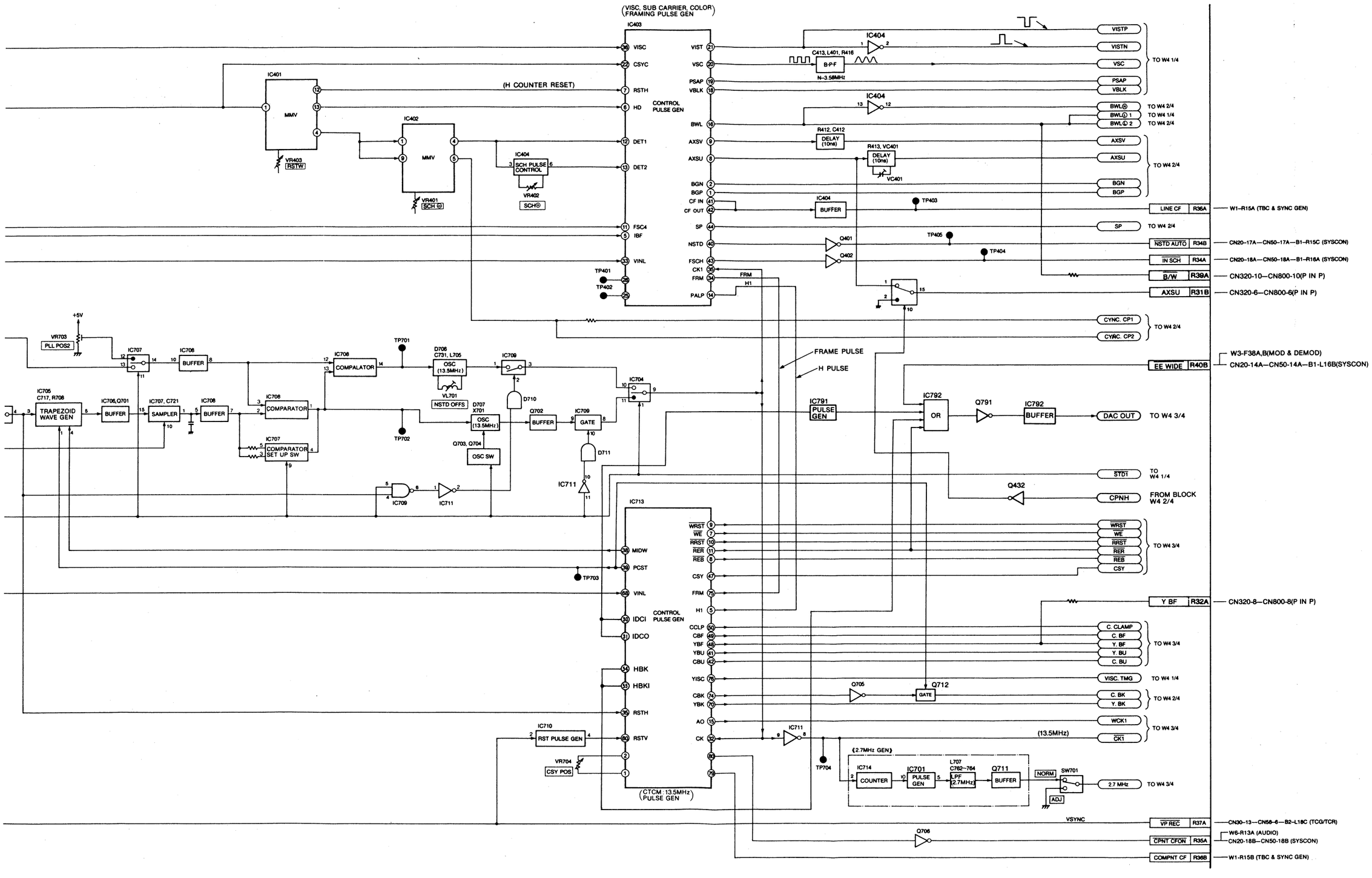

REVERSE SIDE

W4 (DECODER) BLOCK DIAGRAM 1/4 (A/D SECTION) [FOR AU-65H PAL]

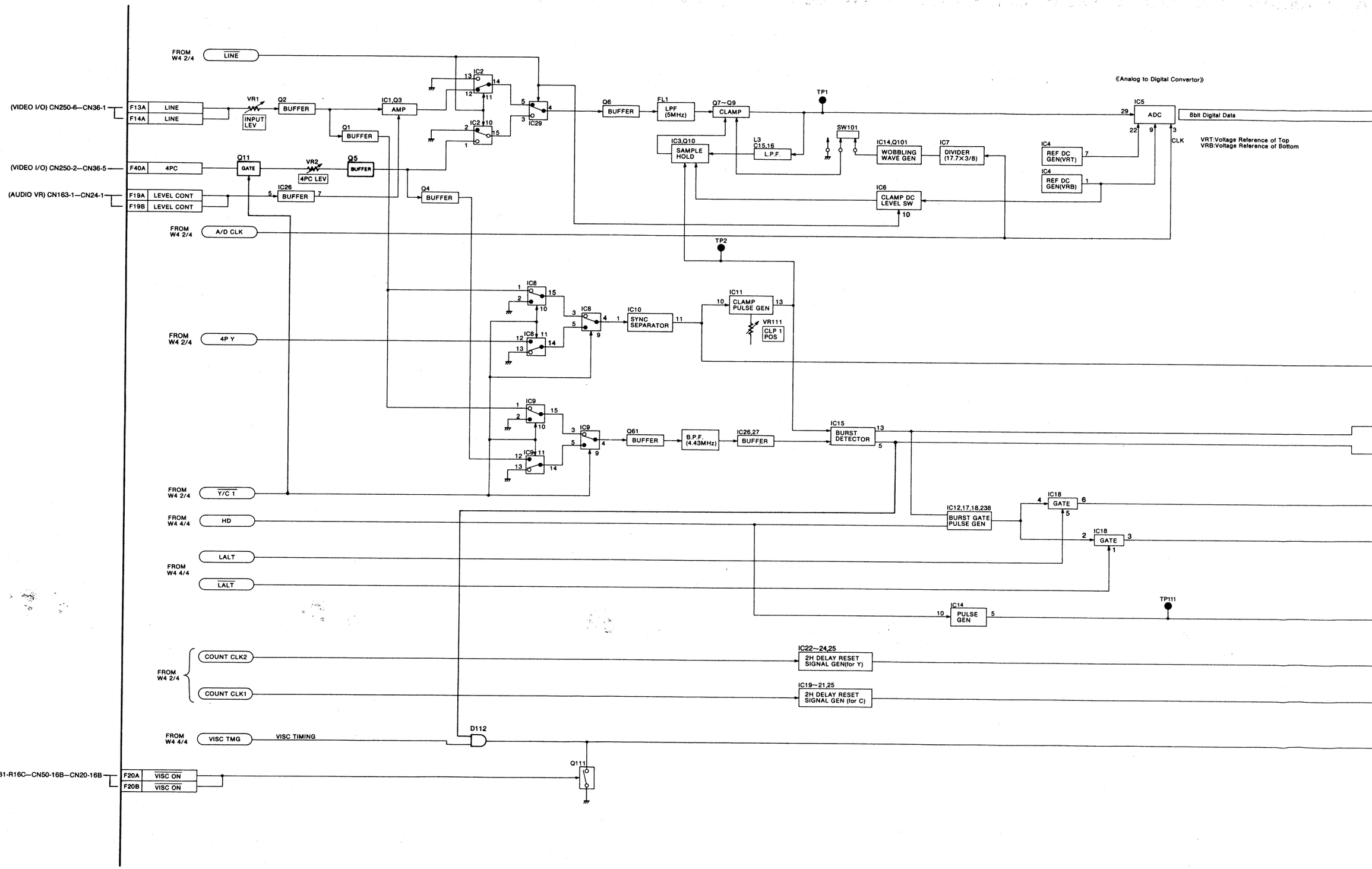

A/D SECTION) [FOR AU-65H PAL]

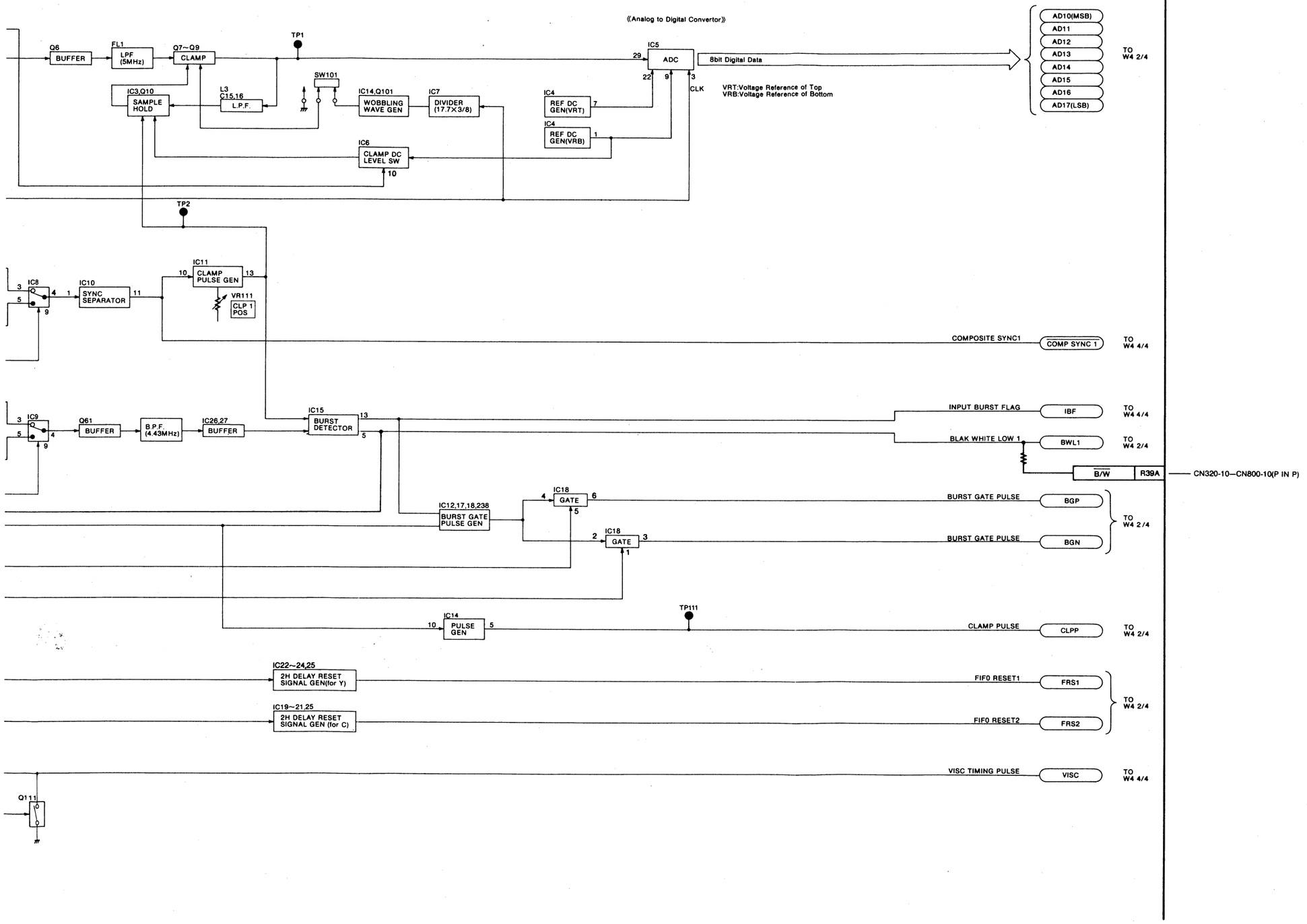

W4 (DECODER) BLOCK DIAGRAM 2/4 (DIGITAL DECODER) [FOR AU-65H PAL]

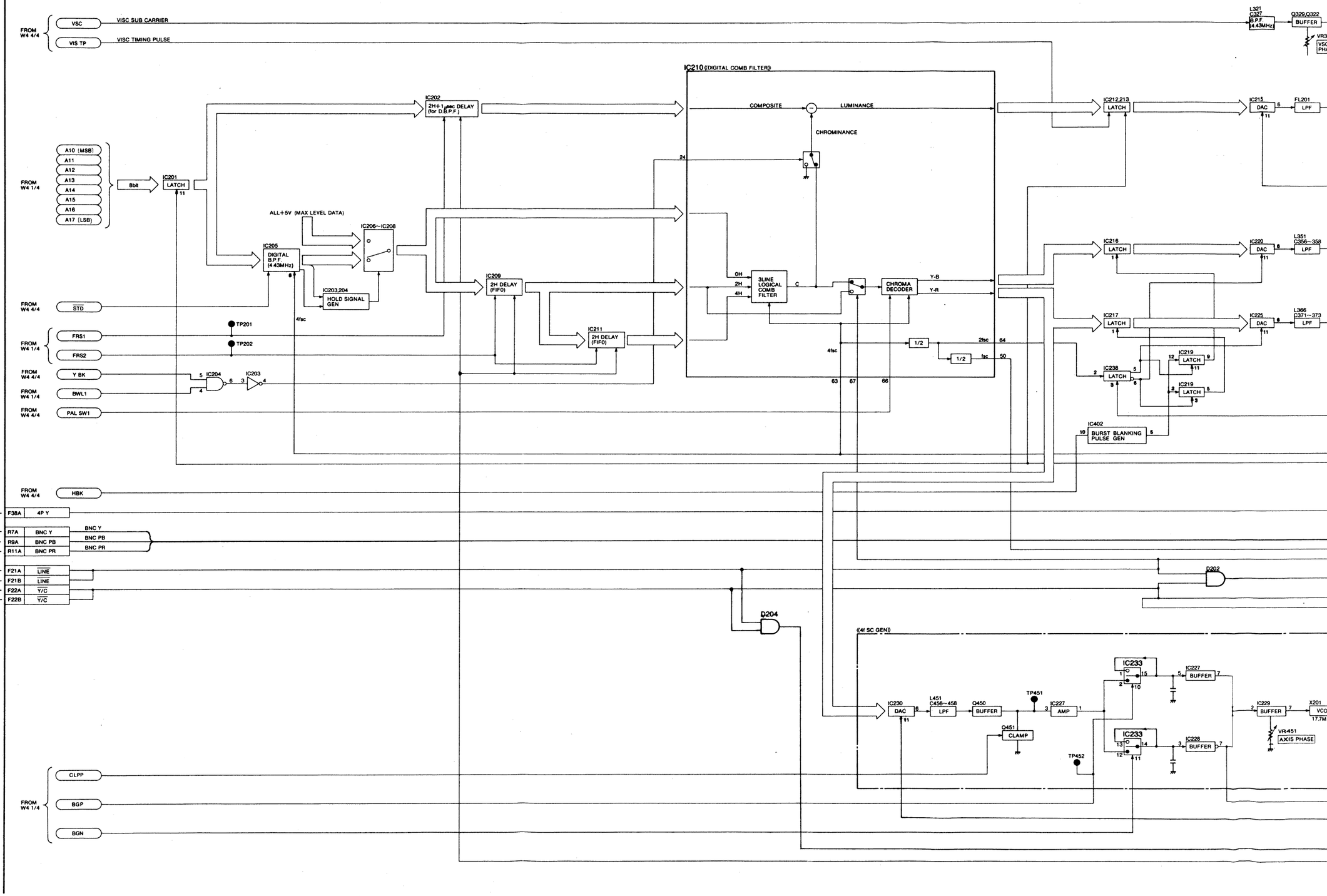

2/4 (DIGITAL DECODER) [FOR AU-65H PAL]

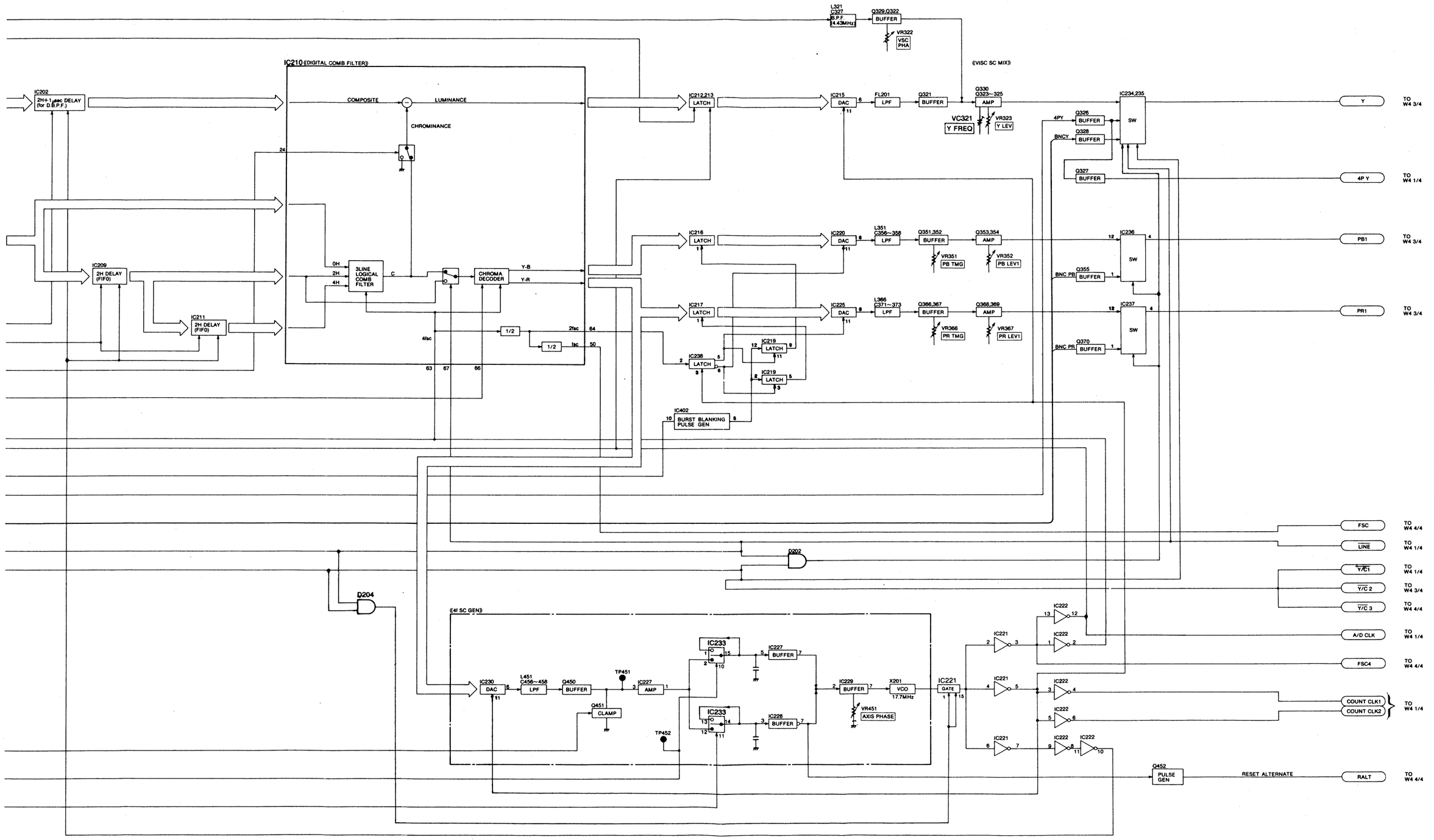

W4 (DECODER) BLOCK DIAGRAM 3/4 (CTCM SECTION) [FOR AU-65H PAL]

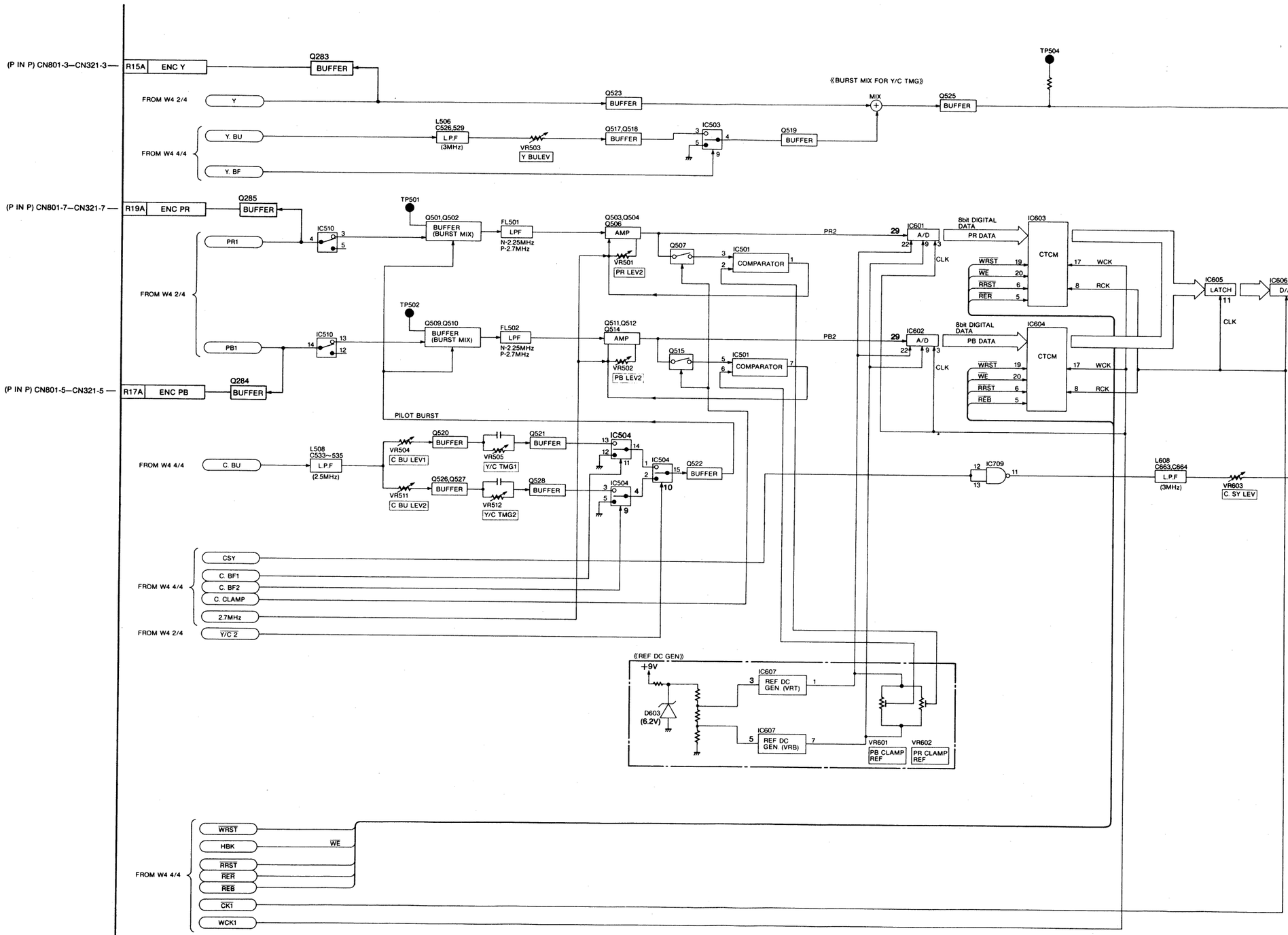

M SECTION) [FOR AU-65H PAL]

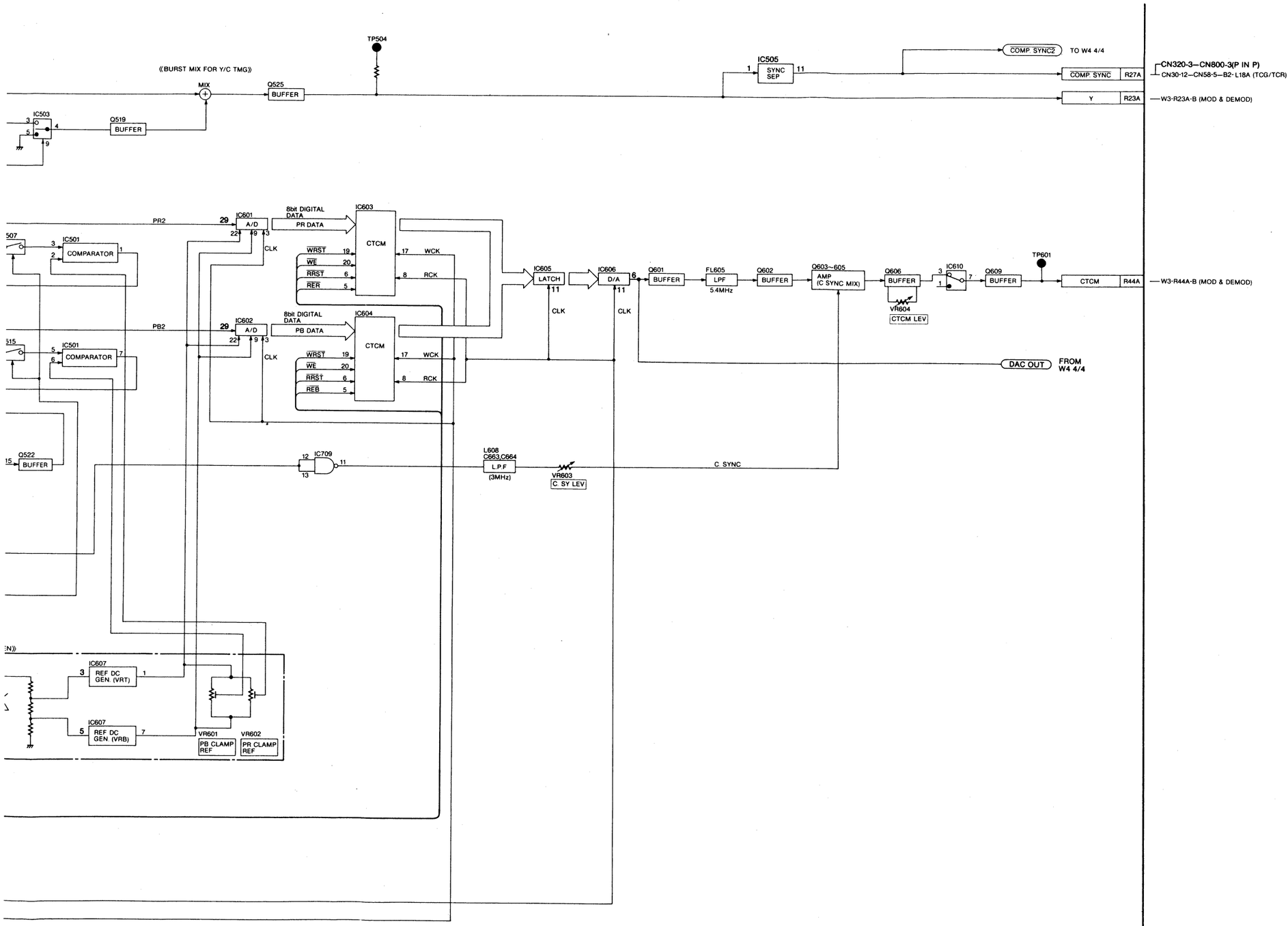

W4 (DECODER) BLOCK DIAGRAM 4/4 (CONTROL PULSE GENERATION [FOR A

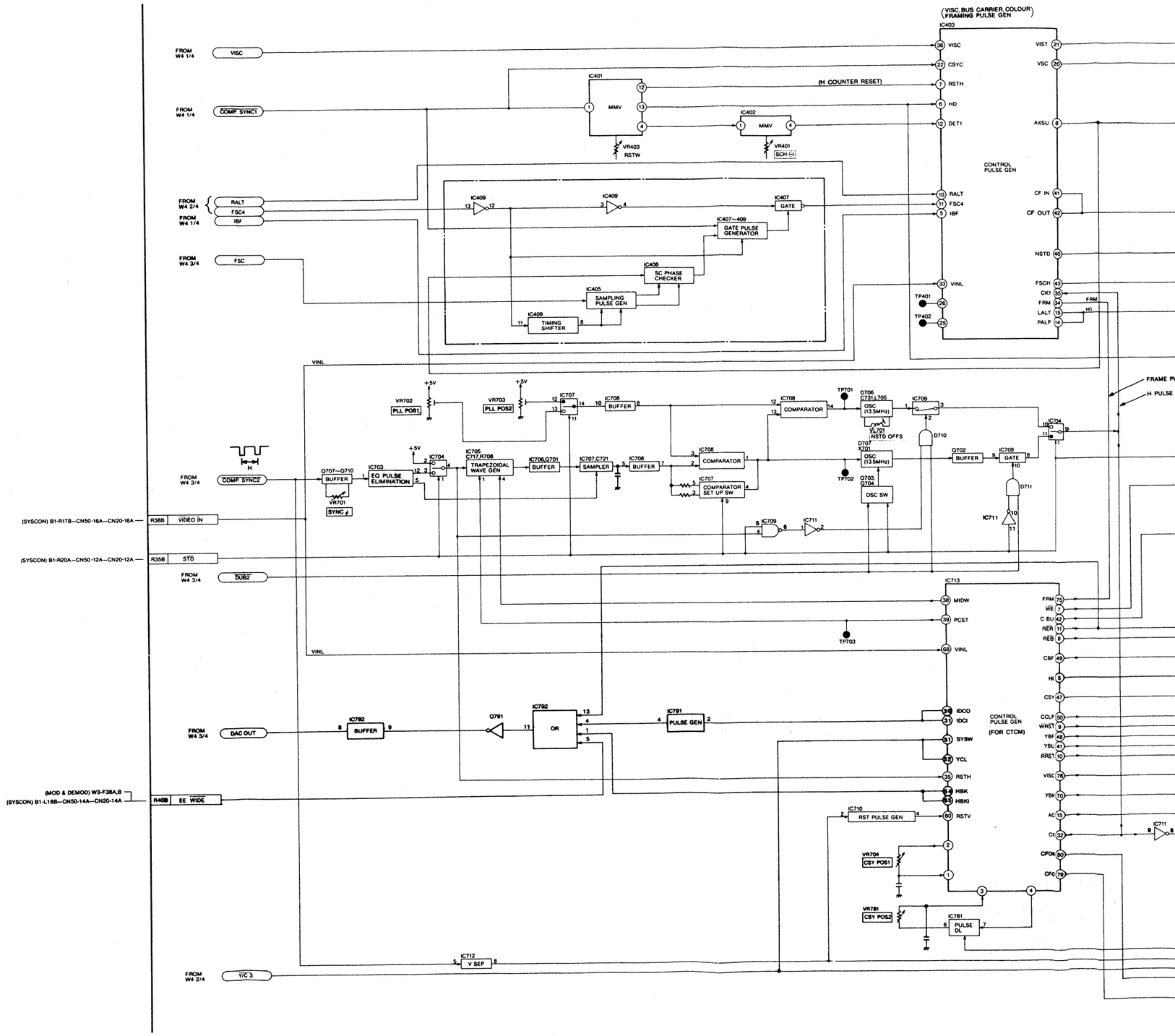

W4 (DECODER) BLOCK DIAGRAM 4/4 (CONTROL PULSE GENERATION [FOR AU-65H PAL]

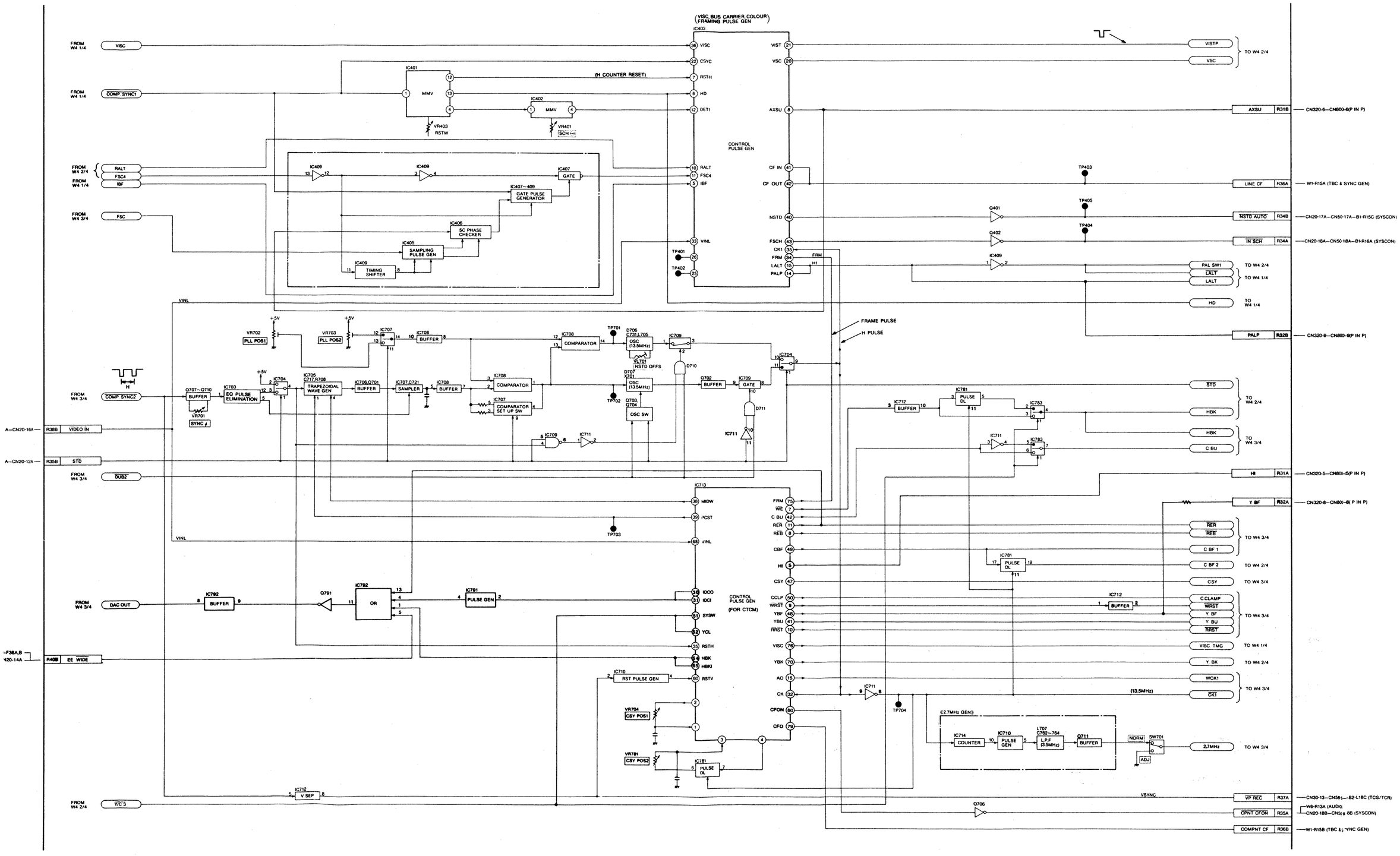

SENC & P IN P BLOCK DIAGRAM 1/2 (SUB ENCODER SECTION) [FOR AU-65H]

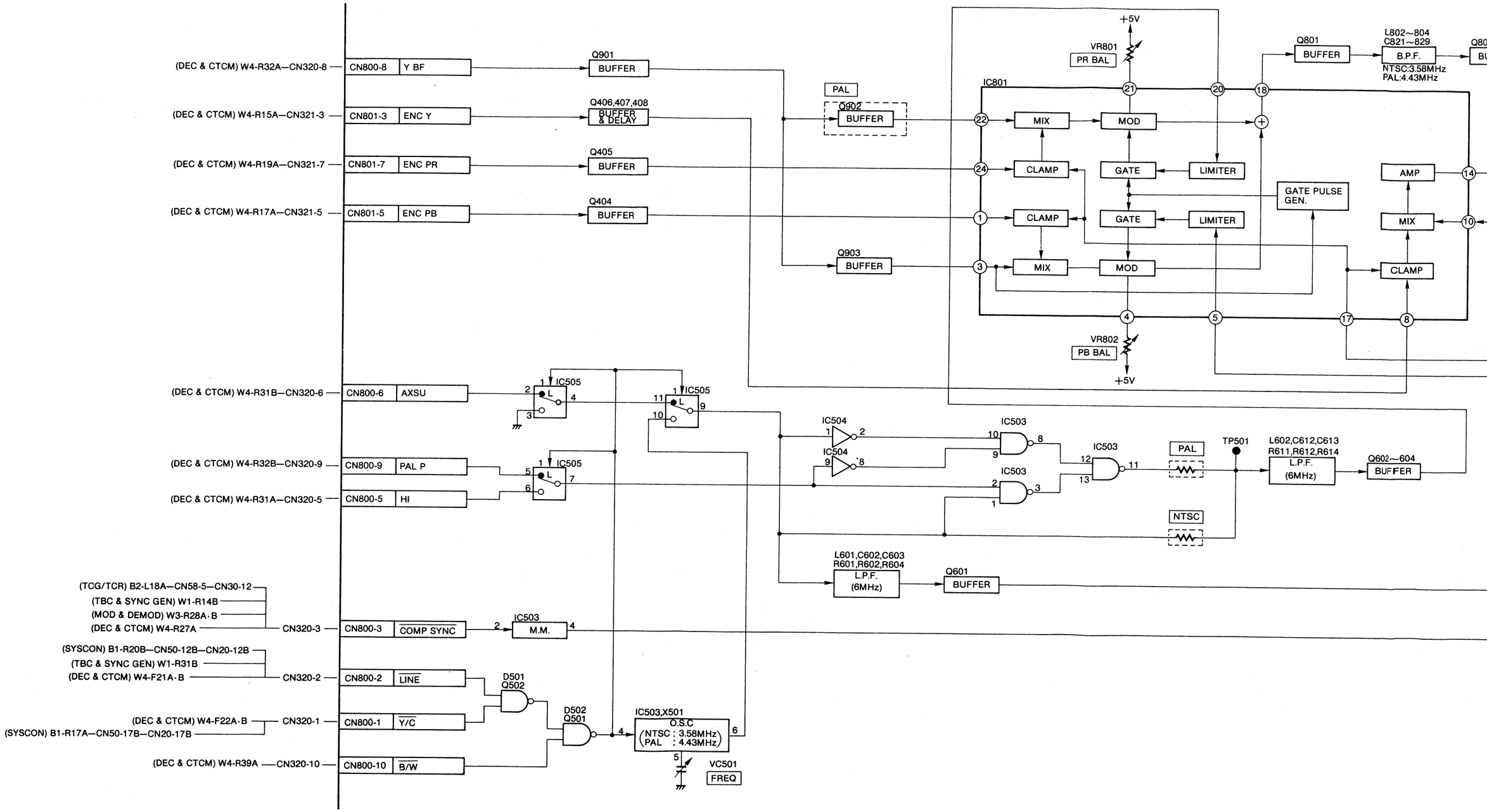

1/2 (SUB ENCODER SECTION) [FOR AU-65H]

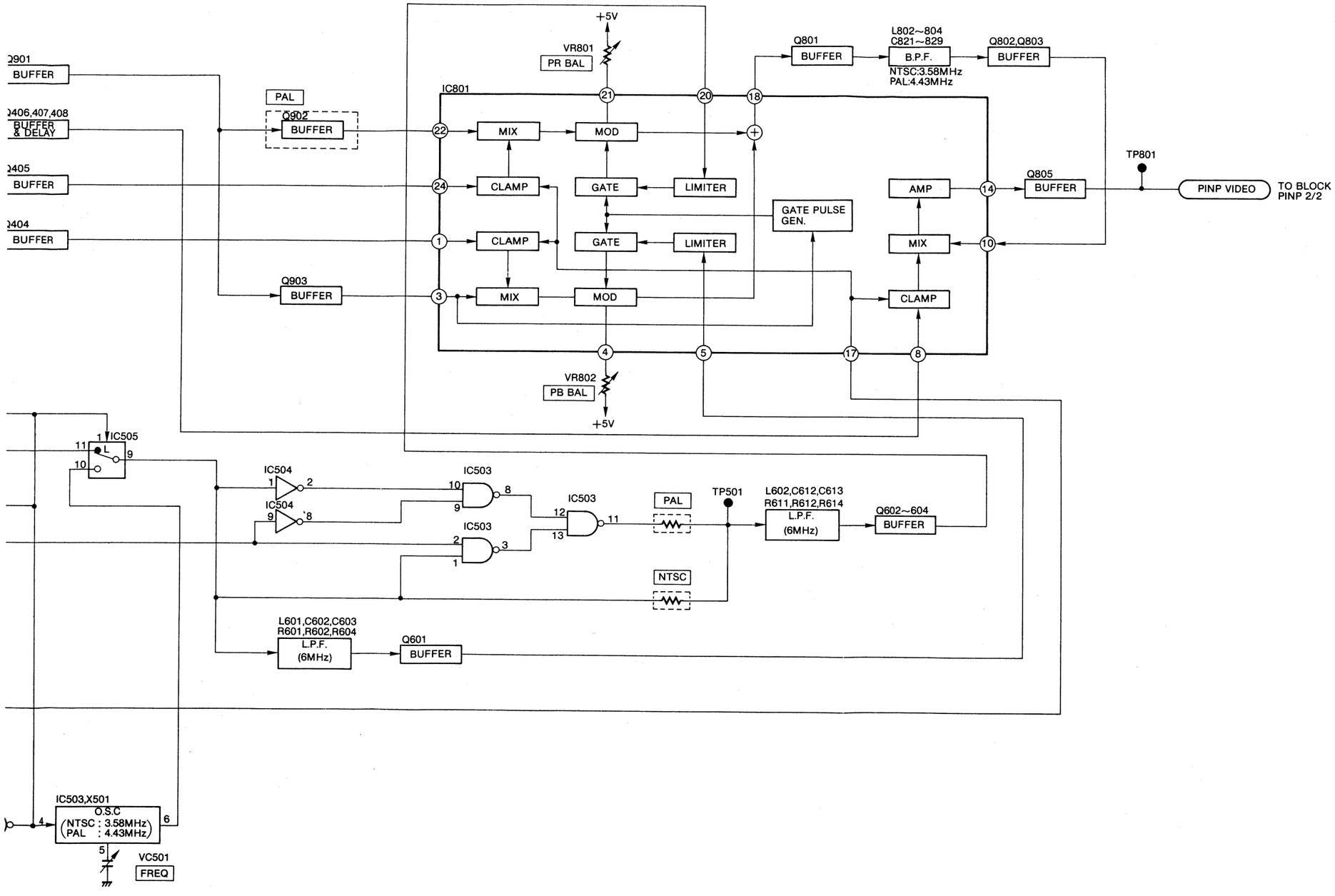

SENC & P IN P BLOCK DIAGRAM 2/2 (P IN P SECTION) [FOR AU-65H]

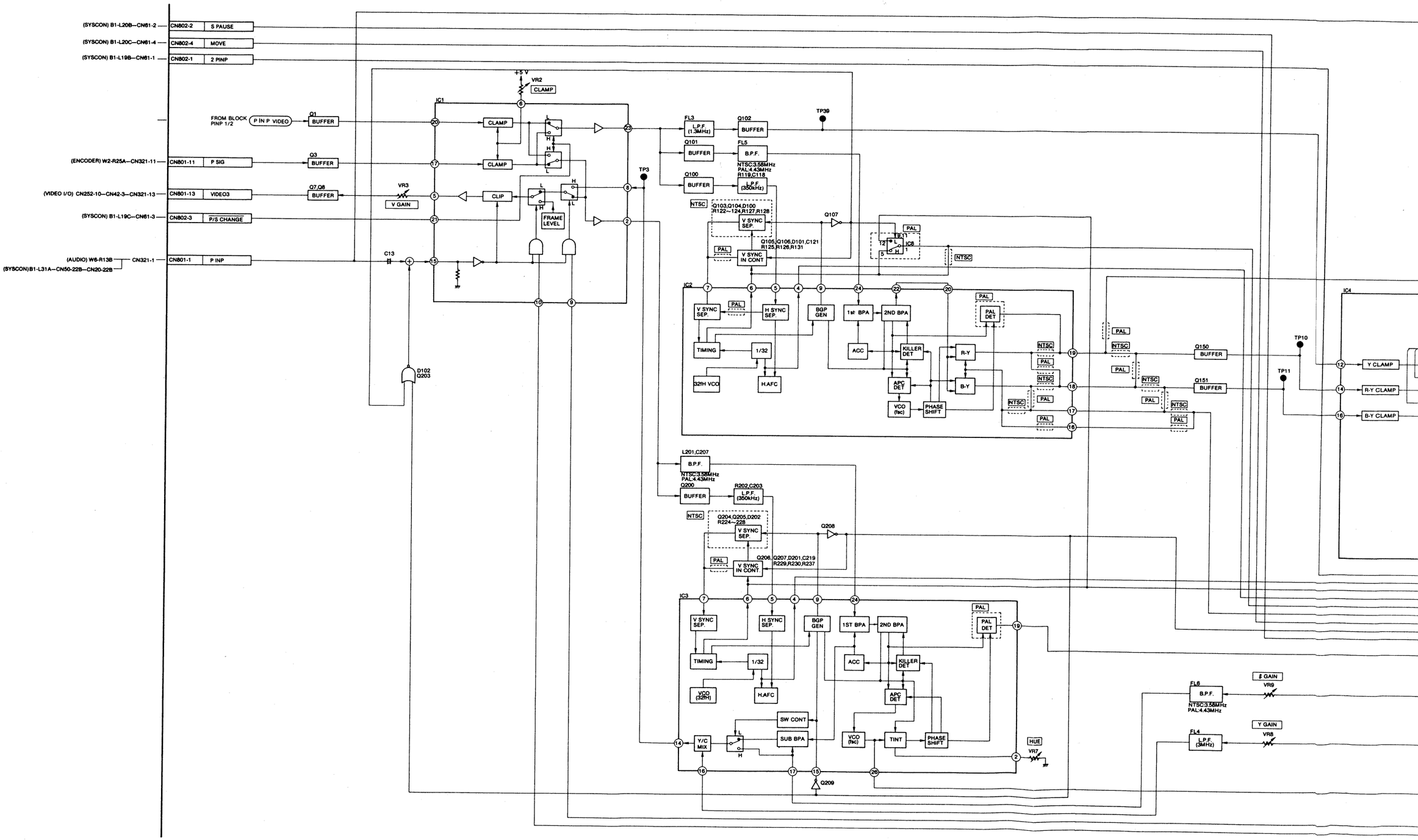

RAM 2/2 (P IN P SECTION) [FOR AU-65H]

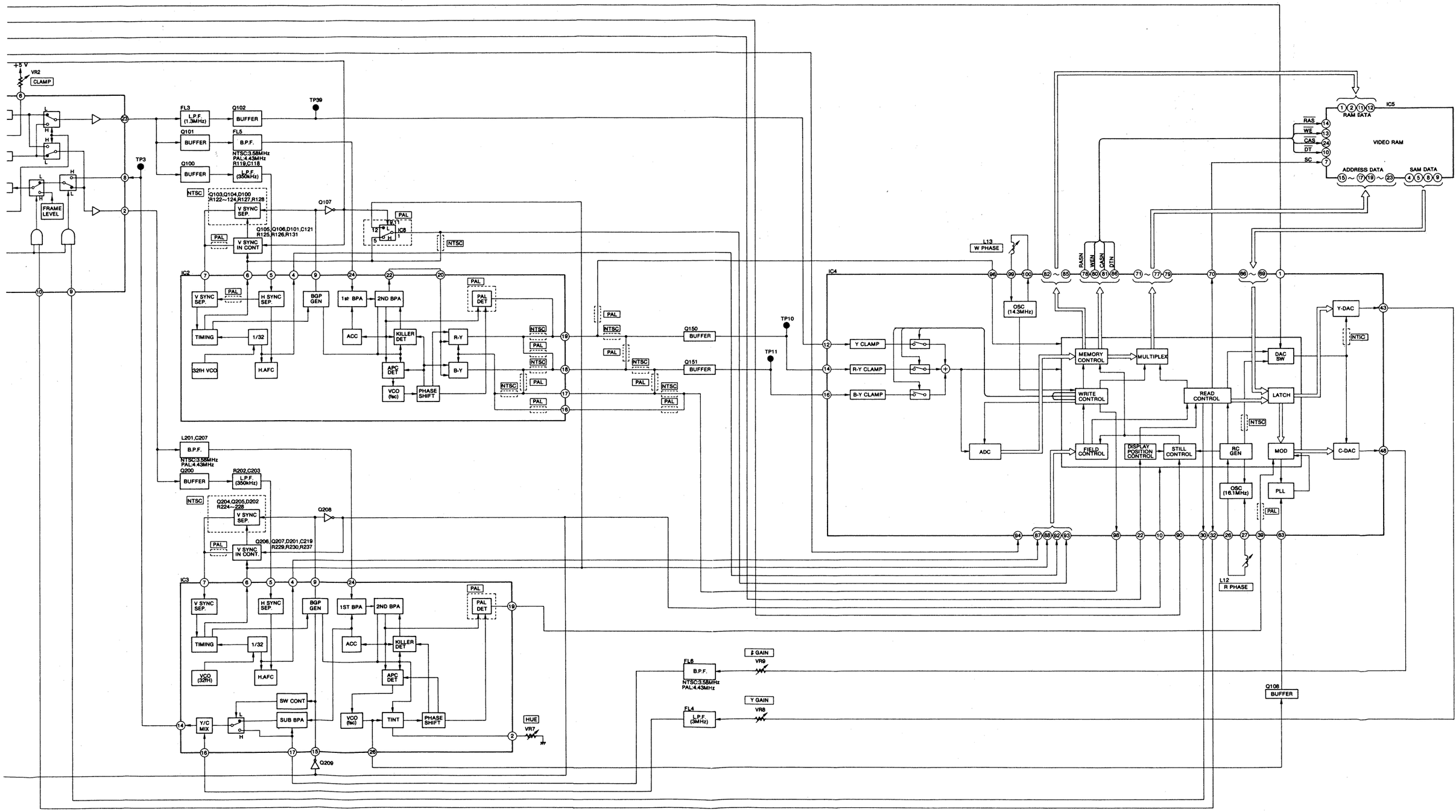

W6 (AUDIO) BLOCK DIAGRAM 1/3 (LINEAR AUDIO SECTION)

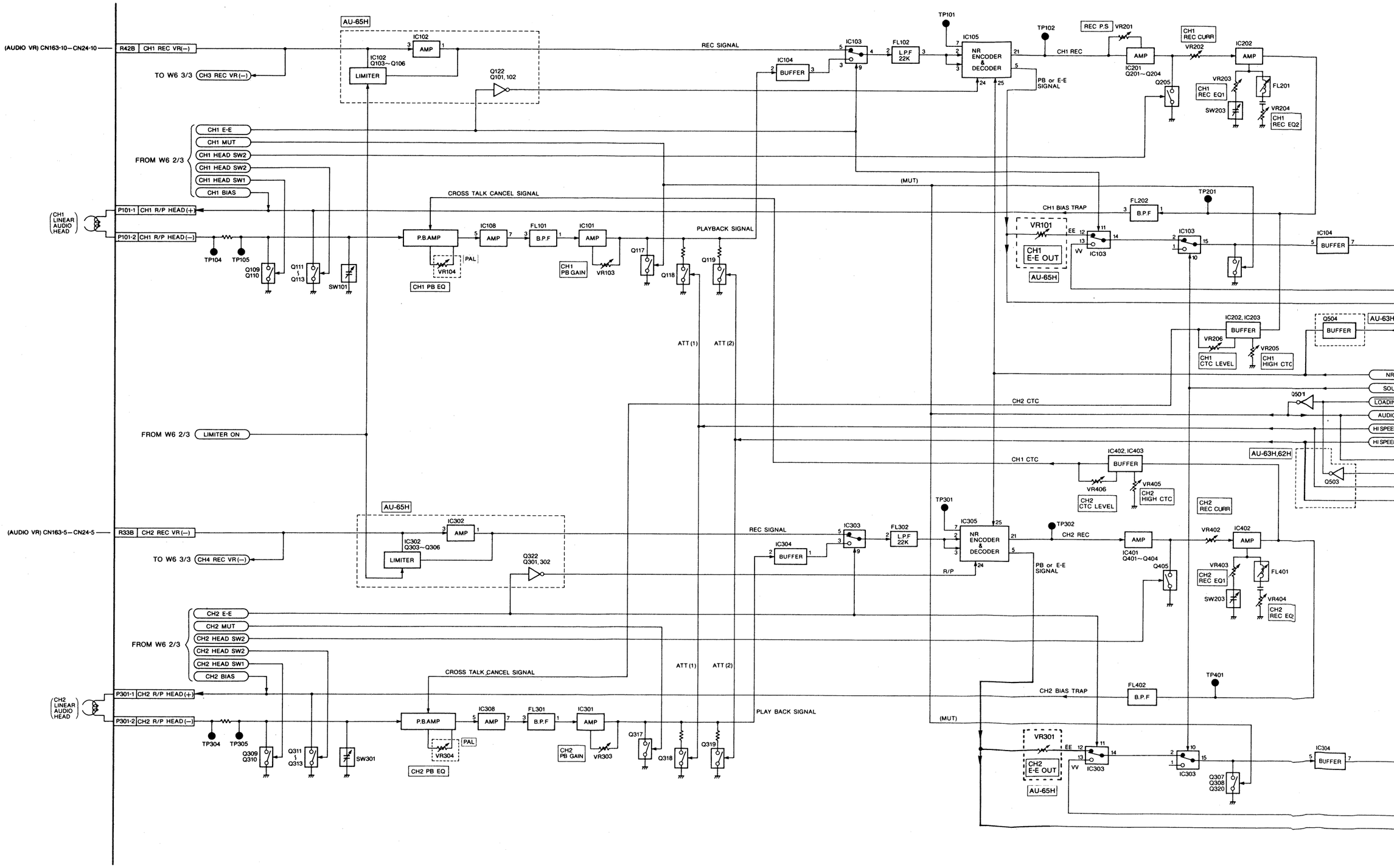

3 (LINEAR AUDIO SECTION)

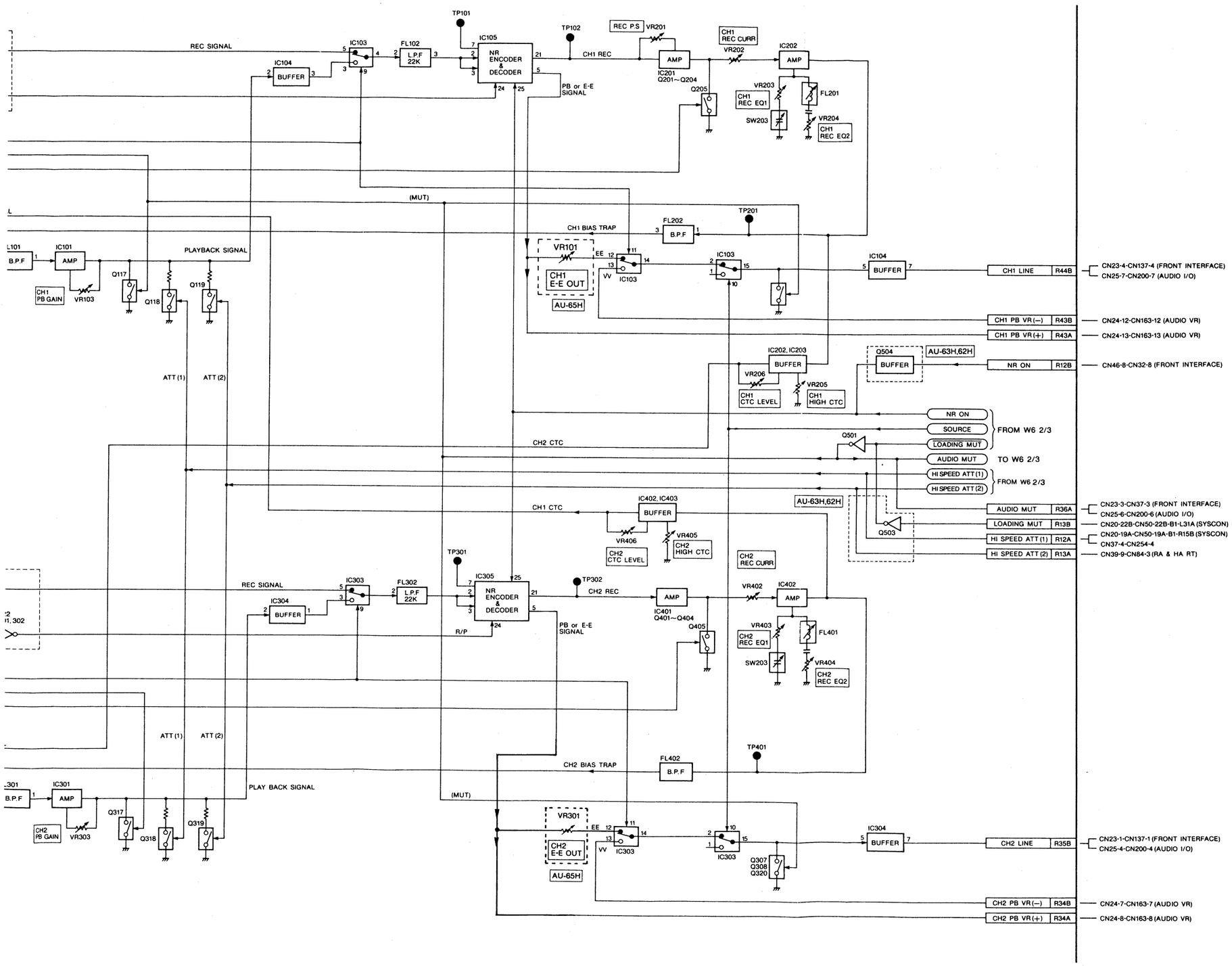

W6 (AUDIO) BLOCK DIAGRAM 2/3 (REC BIAS & TC SECTION)

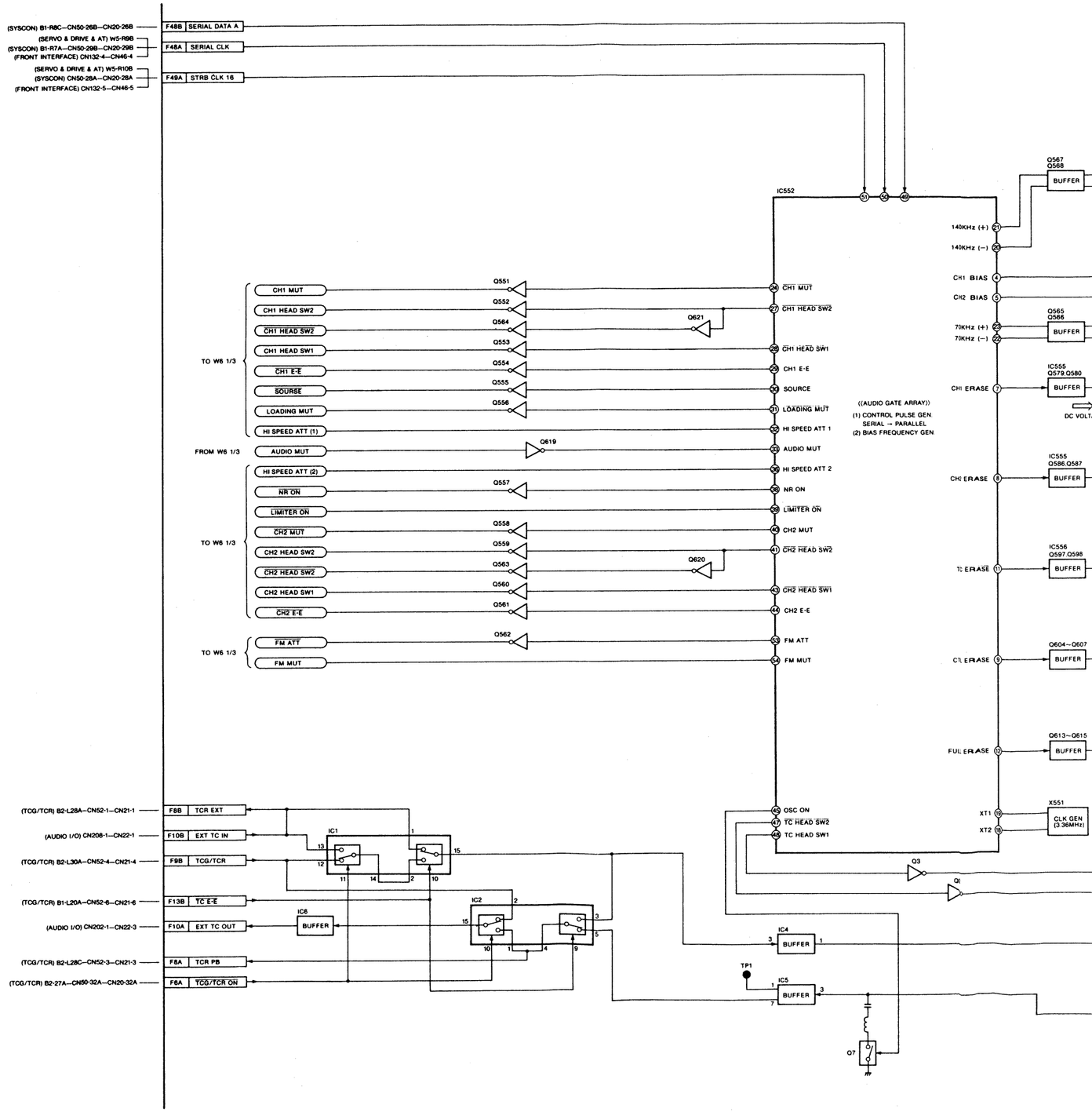

W6 (AUDIO) BLOCK DIAGRAM 2/3 (REC BIAS & TC SECTION)

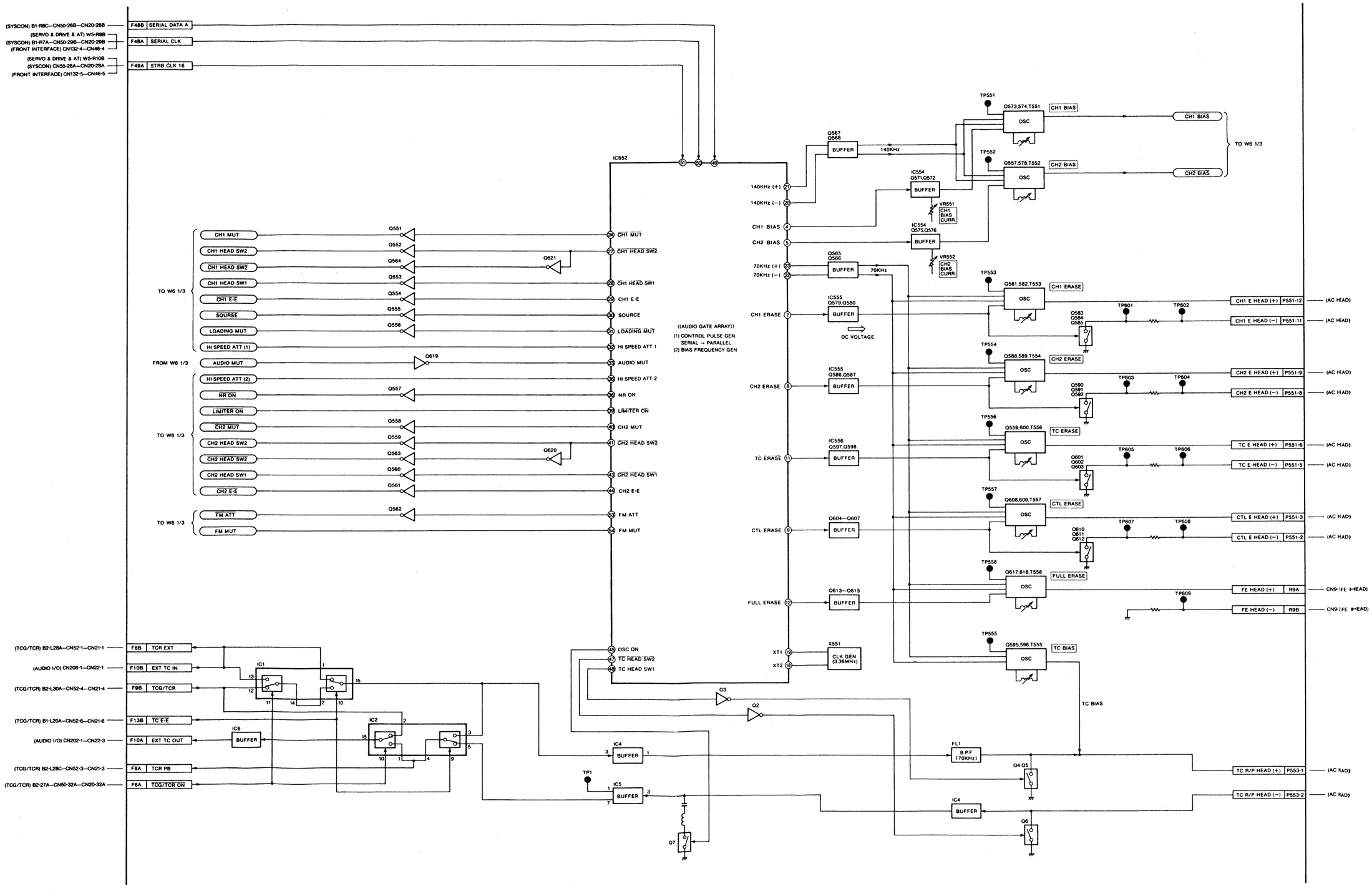

W6(AUDIO) BLOCK DIAGRAM 3/3(FM AUDIO SECTION)

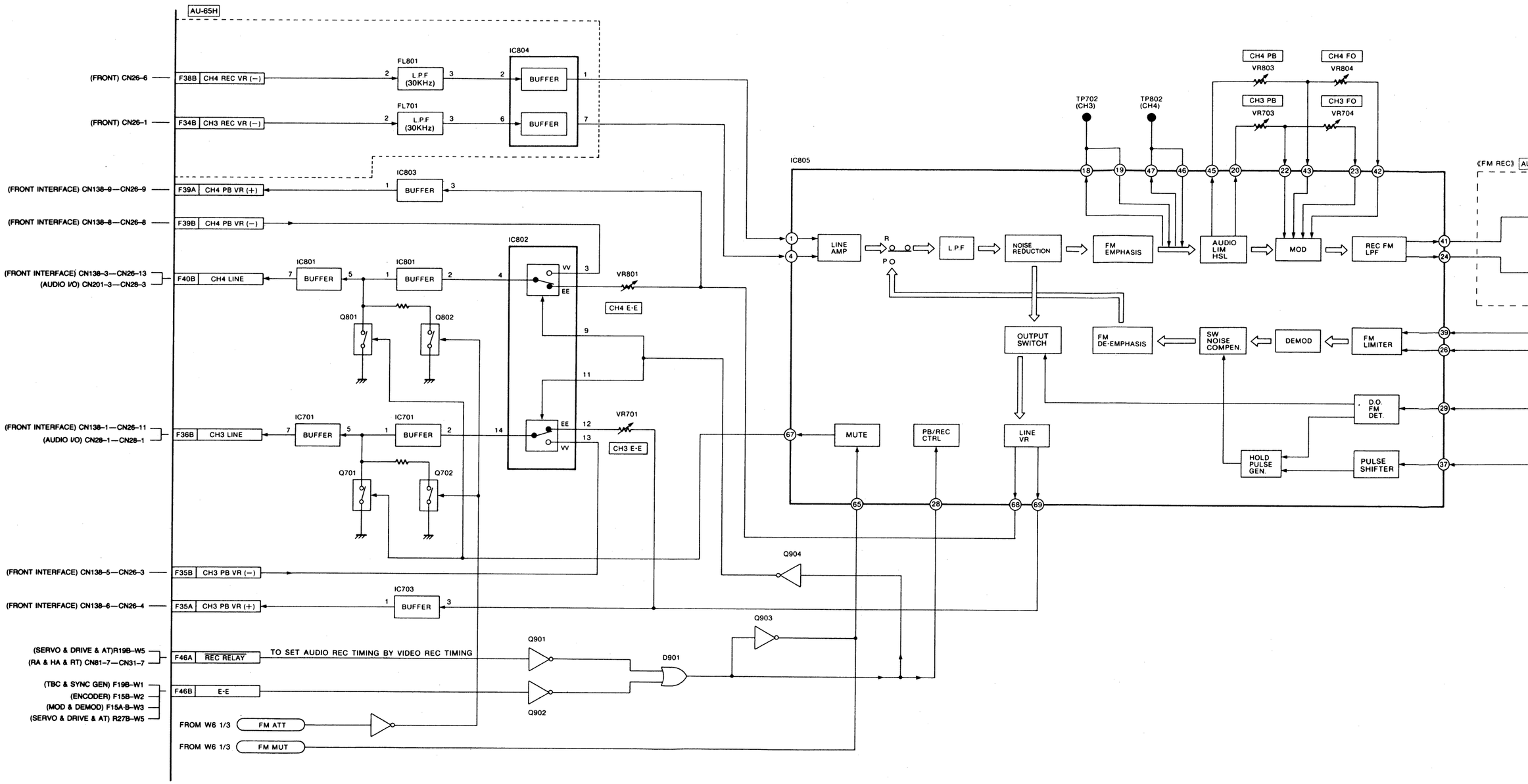

)IO SECTION)

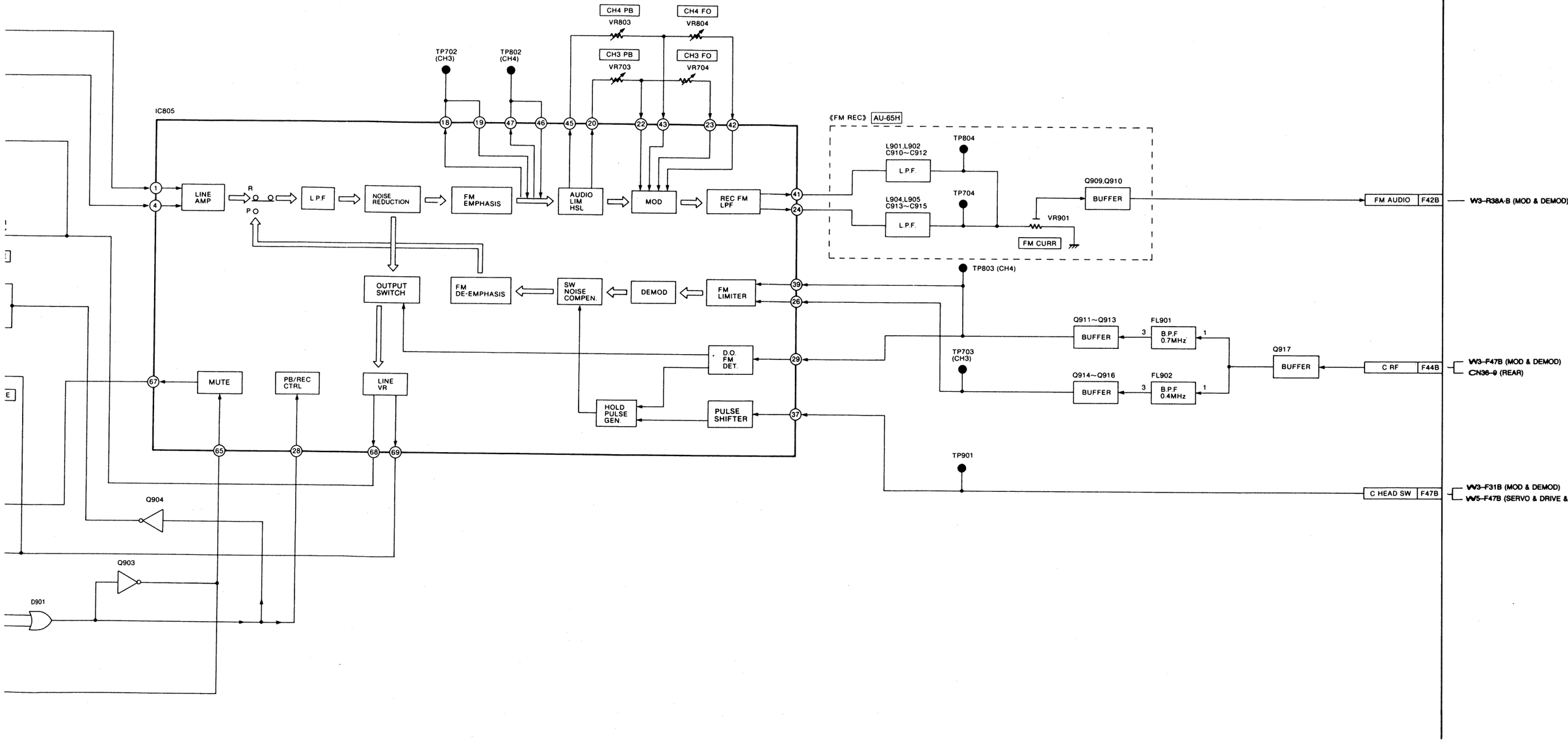
CH4 PB
VR803
CH4 FO
VR804
CH3 PB
VR703
CH3 FO
VR704
TP702 (CH3)
TP802 (CH4)
IC805
《FM REC》 AU-65H
L901,L902 C910~C912
L.P.F.
TP804
L904,L905 C913~C915
L.P.F.
TP704
VR901
FM CURR
Q909,Q910
BUFFER
FM AUDIO
F42B
W3-R38A-B (MOD & DEMOD)
LINE AMP
R
P
L.P.F.
NOISE REDUCTION
FM EMPHASIS
AUDIO LIM HSL
MOD
REC FM LPF
OUTPUT SWITCH
FM DE-EMPHASIS
SW NOISE COMPEN.
DEMOD
FM LIMITER
TP803 (CH4)
Q911~Q913
BUFFER
FL901
B.P.F 0.7MHz
Q914~Q916
BUFFER
FL902
B.P.F 0.4MHz
TP703 (CH3)
Q917
BUFFER
C RF
F44B
W3-F47B (MOD & DEMOD)
CN36-9 (REAR)
D.O FM DET.
HOLD PULSE GEN.
PULSE SHIFTER
MUTE
PB/REC CTRL
LINE VR
TP901
C HEAD SW
F47B
W3-F31B (MOD & DEMOD)
W5-F47B (SERVO & DRIVE &
Q904
Q903
D901

B1 (SYSTEM CONTROL) BLOCK DIAGRAM 1/3 (CPU SECTION)

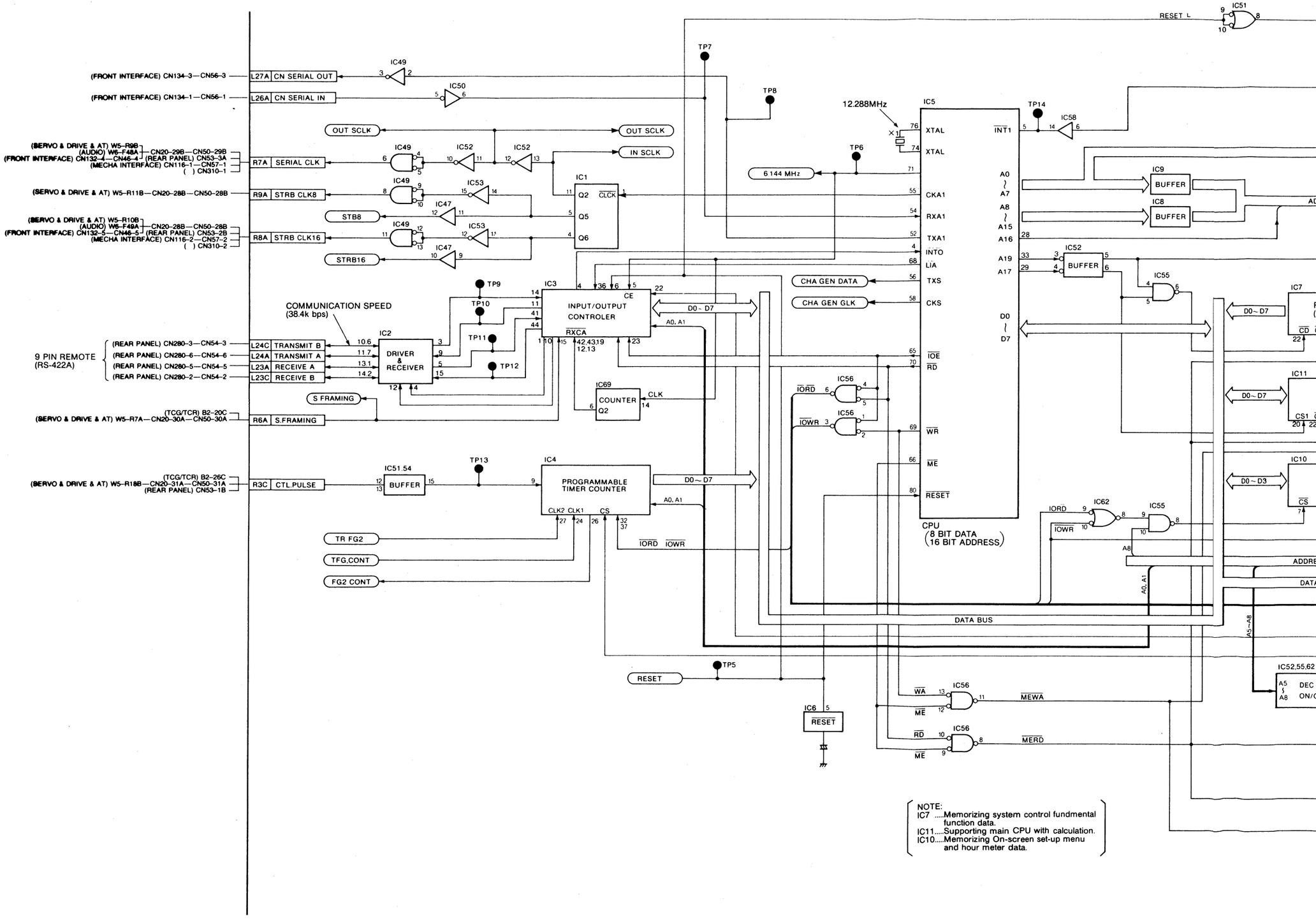

NOTE:
IC7 .....Memorizing system control fundmental function data.
IC11.....Supporting main CPU with calculation.
IC10.....Memorizing On-screen set-up menu and hour meter data.

STEM CONTROL) BLOCK DIAGRAM 1/3 (CPU SECTION)

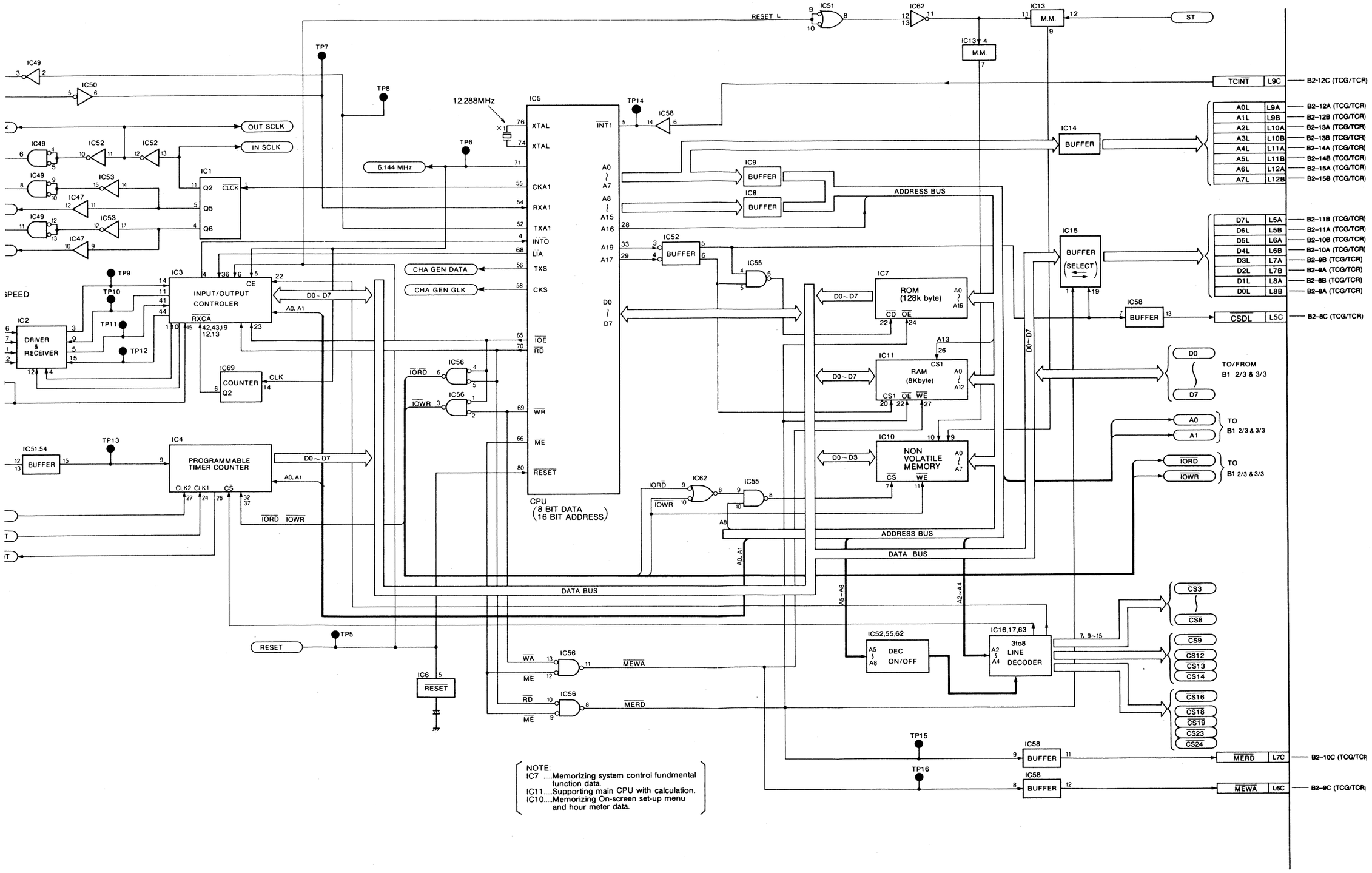

NOTE:
IC7 .....Memorizing system control fundmental function data.
IC11.....Supporting main CPU with calculation.
IC10.....Memorizing On-screen set-up menu and hour meter data.

REVERSE SIDE SYSTEM CO
BLOCK DIA

B1 (SYSTEM CONTROL) BLOCK DIAGRAM 2/3 (I/O SECTION)

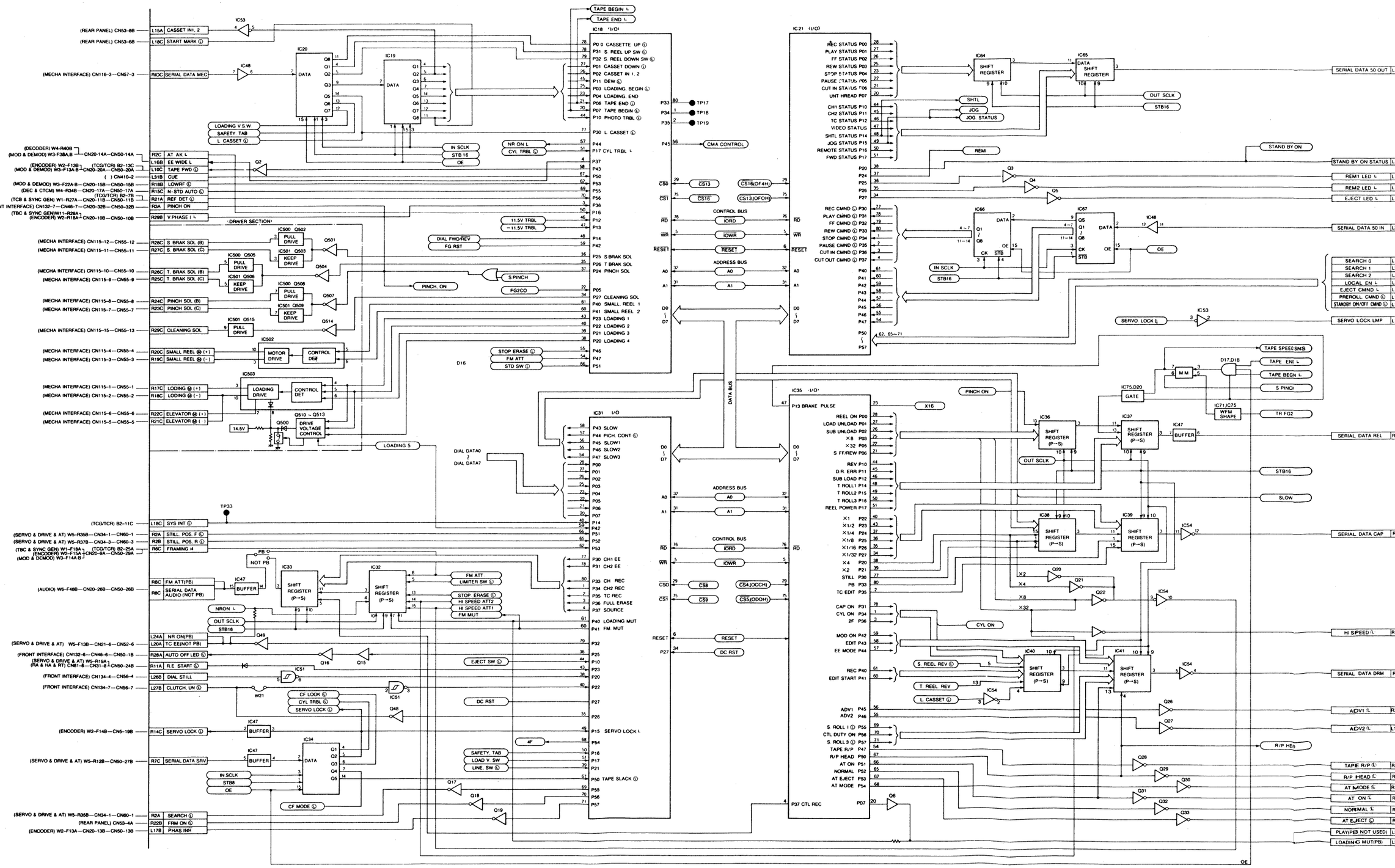
IC53
IC20
IC19
IC48
IC18 'I/O'
IC21 (I/O)
IC64 SHIFT REGISTER
IC65 DATA SHIFT REGISTER
IC66
IC67
IC35 'I/O'
IC31 I/O
IC36 SHIFT REGISTER (P→S)
IC37 SHIFT REGISTER (P→S)
IC38 SHIFT REGISTER (P→S)
IC39 SHIFT REGISTER (P→S)
IC40 SHIFT REGISTER (P→S)
IC41 SHIFT REGISTER (P→S)
IC32 SHIFT REGISTER (P→S)
IC33 SHIFT REGISTER (P→S)
IC34
IC47 BUFFER
IC500 Q502 PULL DRIVE
IC501 Q503 KEEP DRIVE
IC500 Q505 PULL DRIVE
IC501 Q506 KEEP DRIVE
IC500 Q508 PULL DRIVE
IC501 Q509 KEEP DRIVE
IC501 Q515 PULL DRIVE
IC502 MOTOR DRIVE
IC503 LOADING DRIVE
CONTROL DET
Q500 DRIVE VOLTAGE CONTROL
Q510 ~ Q513
DRIVER SECTION
TAPE BEGIN L
TAPE END L
SERIAL DATA 50 OUT
SERIAL DATA 50 IN
SERIAL DATA REL
SERIAL DATA CAP
SERIAL DATA DRM
STAND BY ON
STAND BY ON STATUS
REM1 LED L
REM2 LED L
EJECT LED L
SEARCH 0
SEARCH 1
SEARCH 2
LOCAL EN L
EJECT CMND L
PREROLL CMND
STANDBY ON/OFF CMND
SERVO LOCK
SERVO LOCK LMP
TAPE SPEED SNS
TAPE END L
TAPE BEGN L
S PINCH
TR FG2
HI SPEED
SLOW
ADV1
ADV2
R/P HEAD
TAPE R/P
AT MODE
AT ON
NORMAL
AT EJECT
PLAY(PB NOT USED)
LOADING MUT(PB)
OUT SCLK
STB16
IN SCLK
OE
CONTROL BUS
ADDRESS BUS
DATA BUS
CMA CONTROL
DC RST
RESET
PINCH ON
LOADING 5
CF MODE
CF LOCK
CYL TRBL
SERVO LOCK
SAFETY TAB
LOAD V. SW
LINE. SW
FM ATT
LIMITER SW
STOP ERASE
HI SPEED ATT2
HI SPEED ATT1
FM MUT
EJECT SW
DIAL FWD/REV
FG RST
S PINCH
FG2CO
STOP ERASE
FM ATT
STD SW
NR ON L
CYL TRBL
NRON L
SHTL
JOG
JOG STATUS
REMI
CYL ON
X16
TP17
TP18
TP19
TP33
PB
NOT PB
W21
Q1 Q2 Q3 Q4 Q5 Q6 Q7 Q8 Q9 Q10 Q11 Q12 Q13 Q14 Q15 Q16 Q17 Q18 Q19 Q20 Q21 Q22 Q26 Q27 Q28 Q29 Q30 Q31 Q32 Q33 Q48 Q49
D16 D17 D18
(REAR PANEL) CN53-8B
(REAR PANEL) CN53-6B
(MECHA INTERFACE) CN116-3—CN57-3
(DECODER) W4-R40B
(MOD & DEMOD) W3-F38A,B — CN20-14A—CN50-14A
(ENCODER) W2-F13B
(MOD & DEMOD) W3-F13A-B — CN20-20A—CN50-20A
( ) CN410-2
(MOD & DEMOD) W3-F22A-B—CN20-15B—CN50-15B
(DEC & CTCM) W4-R34B—CN20-17A—CN50-17A
(TCG/TCR) B2-7B
(TCB & SYNC GEN) W1-R27A—CN20-11B—CN50-11B
(FRONT INTERFACE) CN132-7—CN46-7—CN20-32B—CN50-32B
(TBC & SYNC GEN)W1-R29A
(ENCODER) W2-R18A — CN20-10B—CN50-10B
(MECHA INTERFACE) CN115-12—CN55-12
(MECHA INTERFACE) CN115-11—CN55-11
(MECHA INTERFACE) CN115-10—CN55-10
(MECHA INTERFACE) CN115-9—CN55-9
(MECHA INTERFACE) CN115-8—CN55-8
(MECHA INTERFACE) CN115-7—CN55-7
(MECHA INTERFACE) CN115-15—CN55-13
(MECHA INTERFACE) CN115-4—CN55-4
(MECHA INTERFACE) CN115-3—CN55-3
(MECHA INTERFACE) CN115-1—CN55-1
(MECHA INTERFACE) CN115-2—CN55-2
(MECHA INTERFACE) CN115-6—CN55-6
(MECHA INTERFACE) CN115-5—CN55-5
(TCG/TCR) B2-11C
(SERVO & DRIVE & AT) W5-R35B—CN34-1—CN60-1
(SERVO & DRIVE & AT) W5-R37B—CN34-3—CN60-3
(TBC & SYNC GEN) W1-F15A
(ENCODER) W2-F15A
(MOD & DEMOD) W3-F14A,B
(AUDIO) W6-F48B—CN20-26B—CN50-26B
(SERVO & DRIVE & AT) W5-F13B—CN21-6—CN52-6
(FRONT INTERFACE) CN132-6—CN46-6—CN50-1B
(SERVO & DRIVE & AT) W5-R19A
(RA & HA & RT) CN81-6—CN31-6
(FRONT INTERFACE) CN134-4—CN56-4
(FRONT INTERFACE) CN134-7—CN56-7
(ENCODER) W2-F14B—CN5-19B
(SERVO & DRIVE & AT) W5-R12B—CN50-27B
(SERVO & DRIVE & AT) W5-R35B—CN34-1—CN60-1
(REAR PANEL) CN53-4A
(ENCODER) W2-F13A—CN20-13B—CN50-13B
L15A CASSET IN1, 2
L18C START MARK
RIOC SERIAL DATA MEC
R2C AT AK L
L16B EE WIDE L
L10C TAPE FWD
L31B CUE
R18B LOWRF
R15C N-STD AUTO
R21A REF DET
R3A PINCH ON
R29B V PHASE I L
R26C S BRAK SOL (B)
R27C S BRAK SOL (C)
R26C T. BRAK SOL (B)
R25C T. BRAK SOL (C)
R24C PINCH SOL (B)
R23C PINCH SOL (C)
R29C CLEANING SOL
R20C SMALL REEL ⊕ (+)
R19C SMALL REEL ⊖ (-)
R17C LODING ⊕ (+)
R18C LODING ⊖ (-)
R22C ELEVATOR ⊕ (+)
R21C ELEVATOR ⊖ (-)
L18C SYS INT
R2A STILL. POS. F
R2B STILL. POS. R
R6C FRAMING
R8C FM ATT(PB)
R8C SERIAL DATA AUDIO (NOT PB)
L24A NR ON(PB)
L20A TC EE(NOT PB)
R28A AUTO OFF LED
R11A R.E START
L26B DIAL STILL
L27B CLUTCH. UN
R14C SERVO LOCK
R7C SERIAL DATA SRV
R2A SEARCH
R22B FRM ON
L17B PHAS INH
P00 CASSETTE UP
P31 S. REEL UP SW
P32 S. REEL DOWN SW
P01 CASSET DOWN
P02 CASSET IN 1, 2
P11 DEW
P03 LOADING. BEGIN
P04 LOADING. END
P06 TAPE END
P07 TAPE BEGIN
P10 PHOTO TRBL
P30 L CASSET
P44
P17 CYL TRBL L
P37
P43
P50
P53
P55
P56
P36
P16
P12
P13
P14
P42
P25 S BRAK SOL
P26 T BRAK SOL
P24 PINCH SOL
P05
P27 CLEANING SOL
P40 SMALL REEL 1
P41 SMALL REEL 2
P23 LOADING 1
P22 LOADING 2
P21 LOADING 3
P20 LOADING 4
P46
P47
P51
P43 SLOW
P44 PICH. CONT
P45 SLOW1
P46 SLOW2
P47 SLOW3
P00
P01
P02
P03
P04
P05
P06
P07
P14
P42
P51
P52
P53
P30 CH1 EE
P31 CH2 EE
P33 CH. REC
P34 CH2 REC
P35 TC REC
P36 FULL ERASE
P37 SOURCE
P40 LOADING MUT
P41 FM MUT
P32
P25
P10
P23
P20
P22
P27
P26
P15 SERVO LOCK L
P54
P16
P17
P21
P50 TAPE SLACK
P55
P56
P57
REC STATUS P00
PLAY STATUS P01
FF STATUS P02
REW STATUS P03
STOP STATUS P04
PAUSE STATUS P05
CUT IN STATUS P06
UNT HREAD P07
CH1 STATUS P10
CH2 STATUS P11
TC STATUS P12
VIDEO STATUS
SHTL STATUS P14
JOG STATUS P15
REMOTE STATUS P16
FWD STATUS P17
P20
P24
P25
P26
P27
REC CMND P30
PLAY CMND P31
FF CMND P32
REW CMND P33
STOP CMND P34
PAUSE CMND P35
CUT IN CMND P36
CUT OUT CMND P37
P40
P41
P42
P43
P44
P45
P46
P47
P50
P57
P13 BRAKE PULSE
REEL ON P00
LOAD UNLOAD P01
SUB UNLOAD P02
X8 P03
X32 P05
S FF/REW P06
REV P10
D.R ERR P11
SUB LOAD P12
T ROLL1 P14
T ROLL2 P15
T ROLL3 P16
REEL POWER P17
X1 P22
X1/2 P23
X1/4 P24
X1/8 P25
X1/16 P26
X1/32 P27
X4 P20
X2 P21
STILL P30
PB P33
TC EDIT P35
CAP ON P31
CYL ON P34
2F P36
MOD ON P42
EDIT P43
EE MODE P44
REC P40
EDIT START P41
ADV1 P45
ADV2 P46
S. ROLL 1 P55
CTL DUTY ON P56
S. ROLL 3 P57
TAPE R/P P47
R/P HEAD P50
AT ON P51
NORMAL P52
AT EJECT P53
AT MODE P54
P37 CTL REC
P07
S. REEL REV
T. REEL REV
L. CASSET
DIAL DATA0
DIAL DATA7
SAFETY. TAB
LOAD V. SW
LINE. SW
4F
IN.SCLK
STB8
OE
CS0 CS13 CS16(OF4H) CS13.(OFOH)
CS1 CS16 CS13.(OFOH)
RD IORD
WR IOWR
RESET
A0
A1
D0 ~ D7
P33 P34 P35 P45
TP33
PB
NOT PB
NRON L
OUT SCLK
STB16
IN SCLK
OE
W21
D16
D17 D18
IC75.D20 GATE
IC71.IC75 WFM SHAPE
IC54
IC53
IC48
IC47
IC54
IC54
IC54

DIAGRAM 2/3 (I/O SECTION)

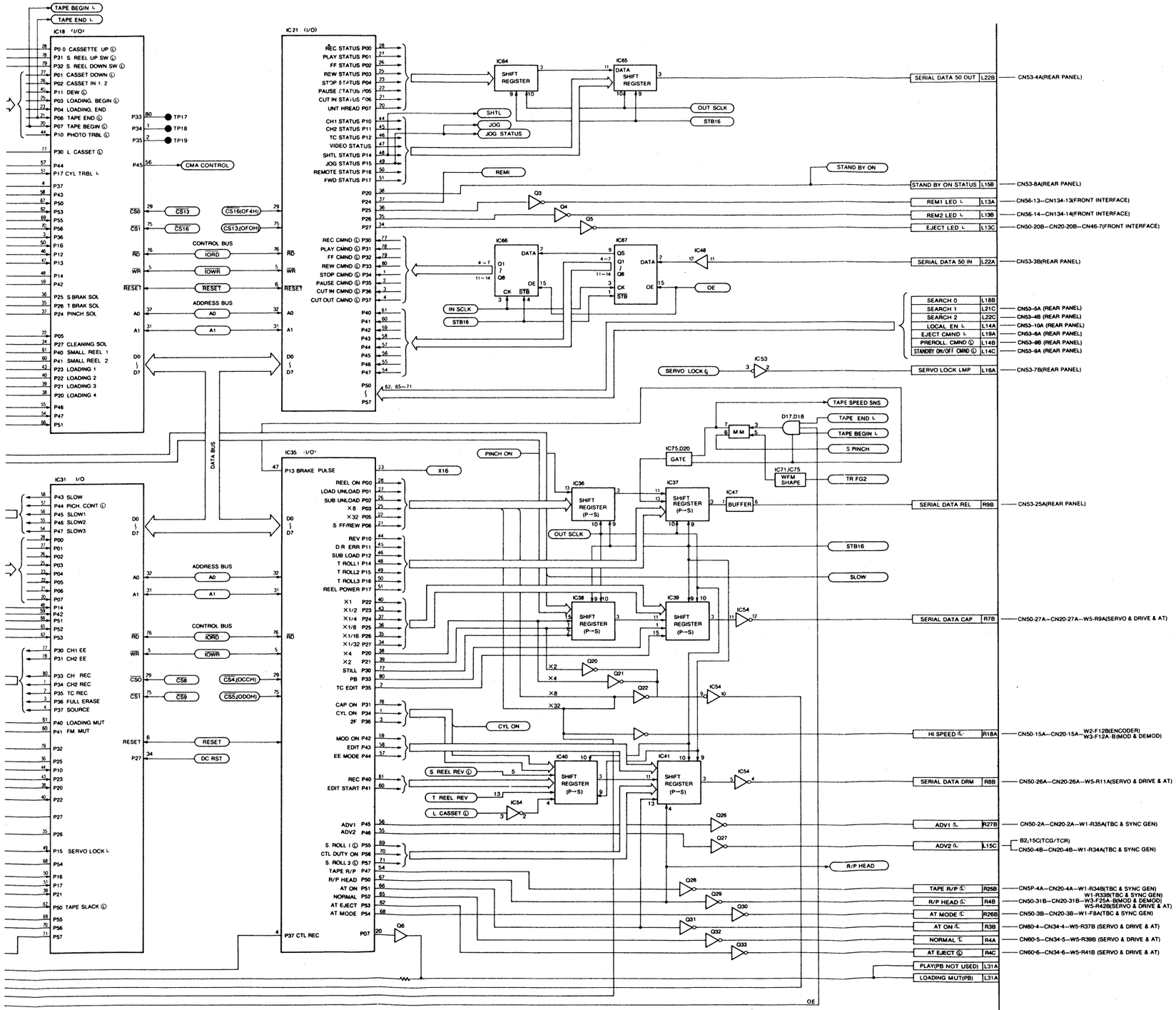

B1 (SYSTEM CONTROL) BLOCK DIAGRAM 3/3 (GATE ARRY & I/O S

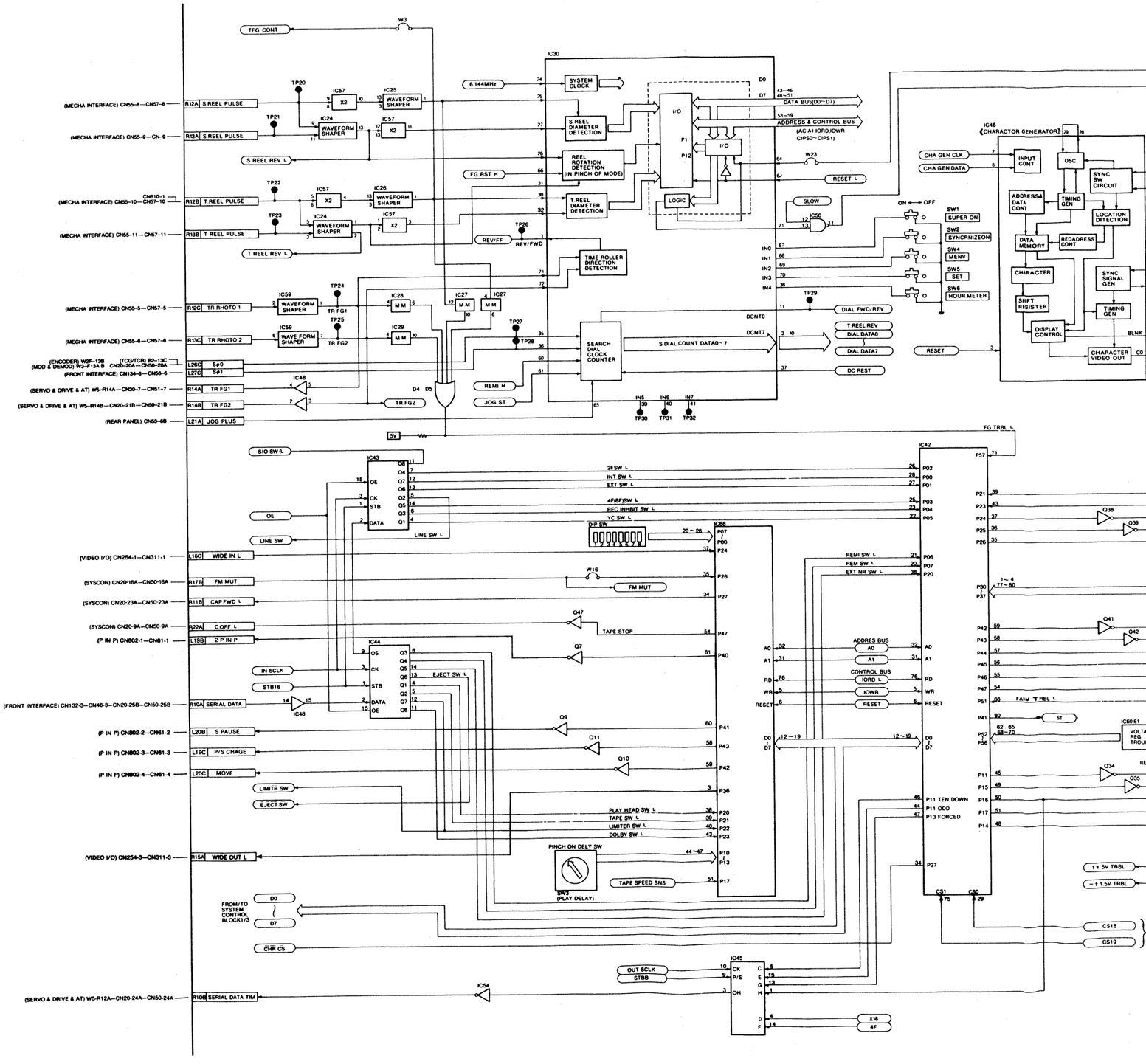

B1 (SYSTEM CONTROL) BLOCK DIAGRAM 3/3 (GATE ARRY & I/O SECTION)

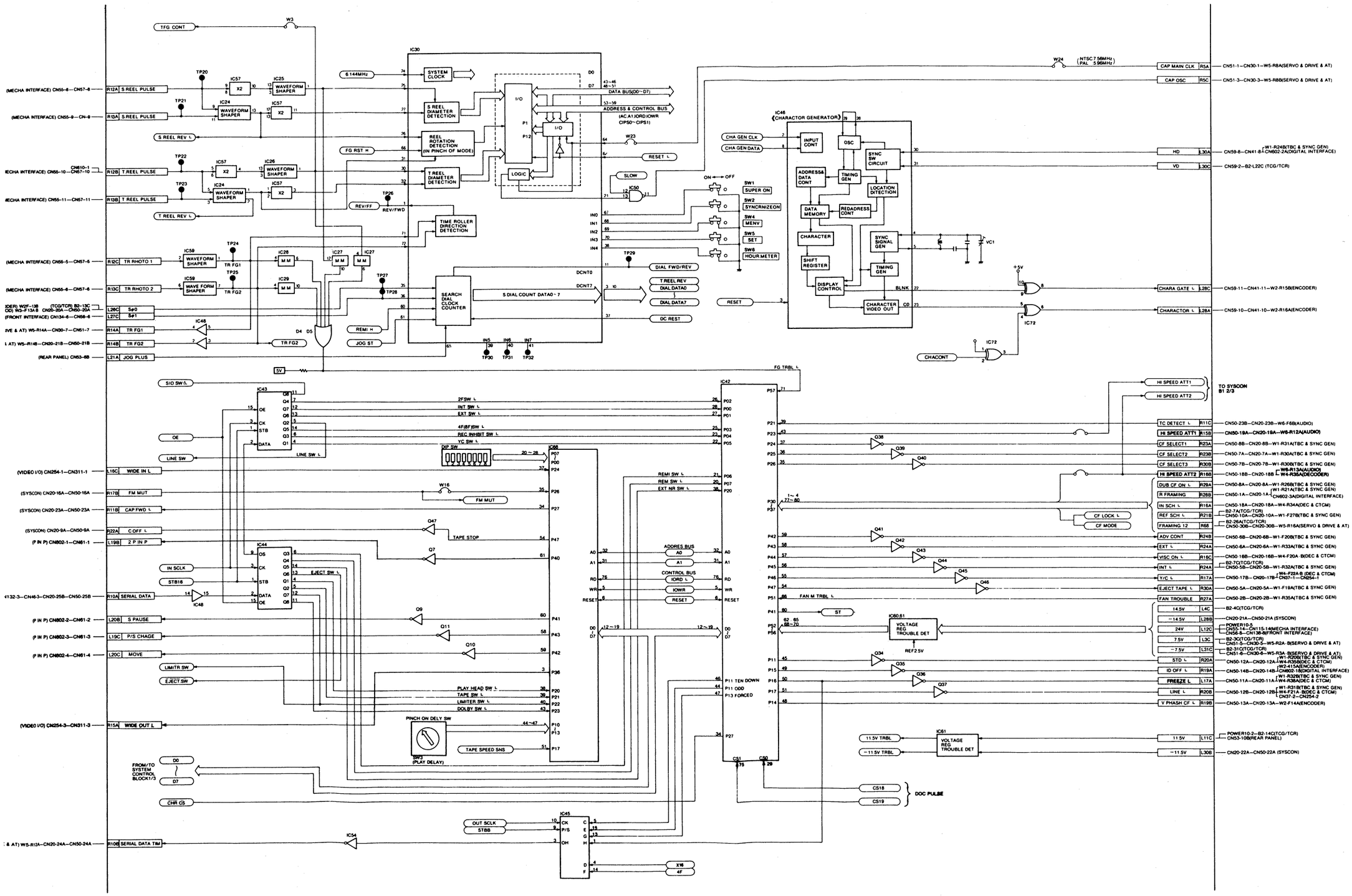

REVERSE SIDE FRONT PANEL BLOCK DIAG

FRONT PANEL A,B BLOCK DIAGRAM[FOR AU-65H]

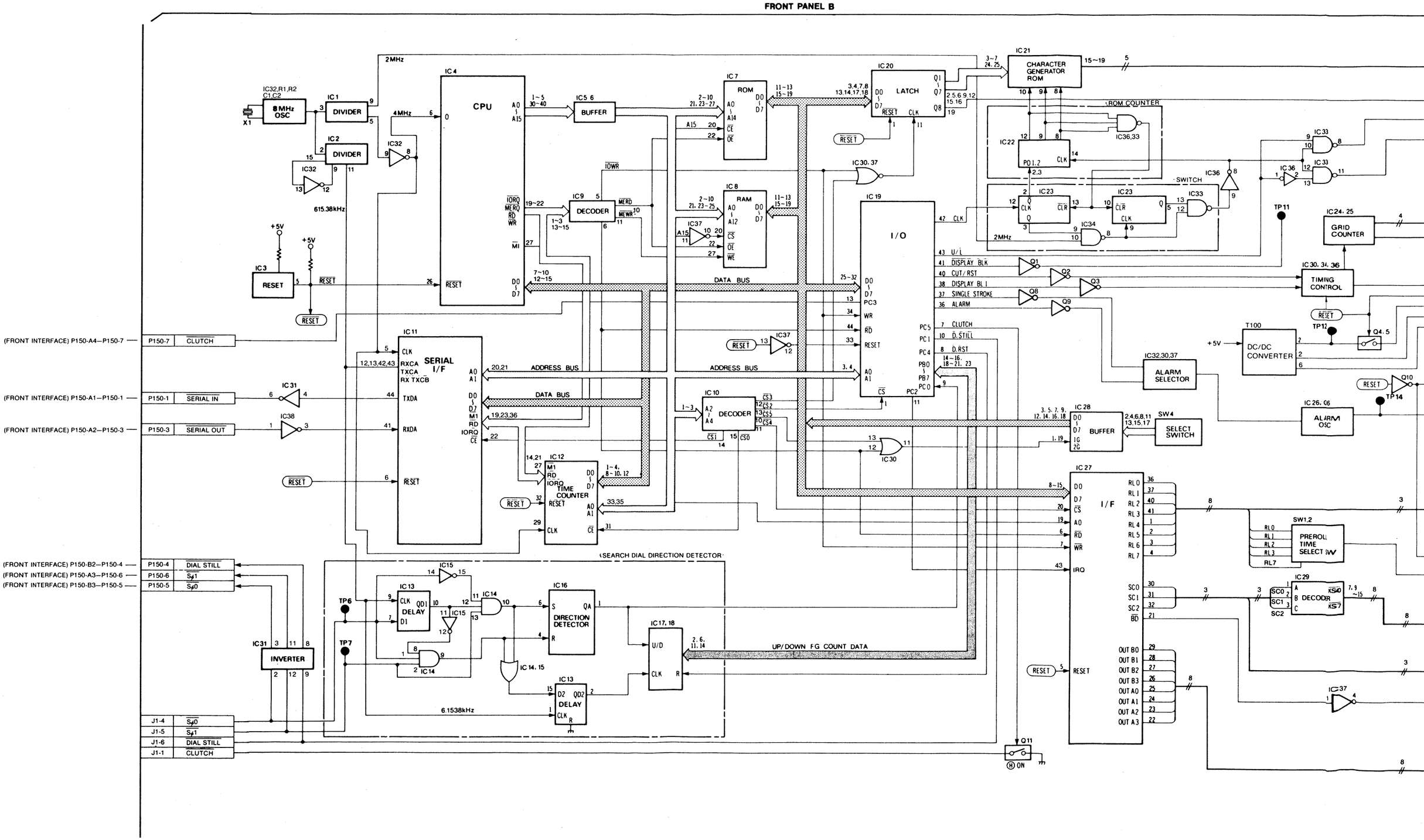

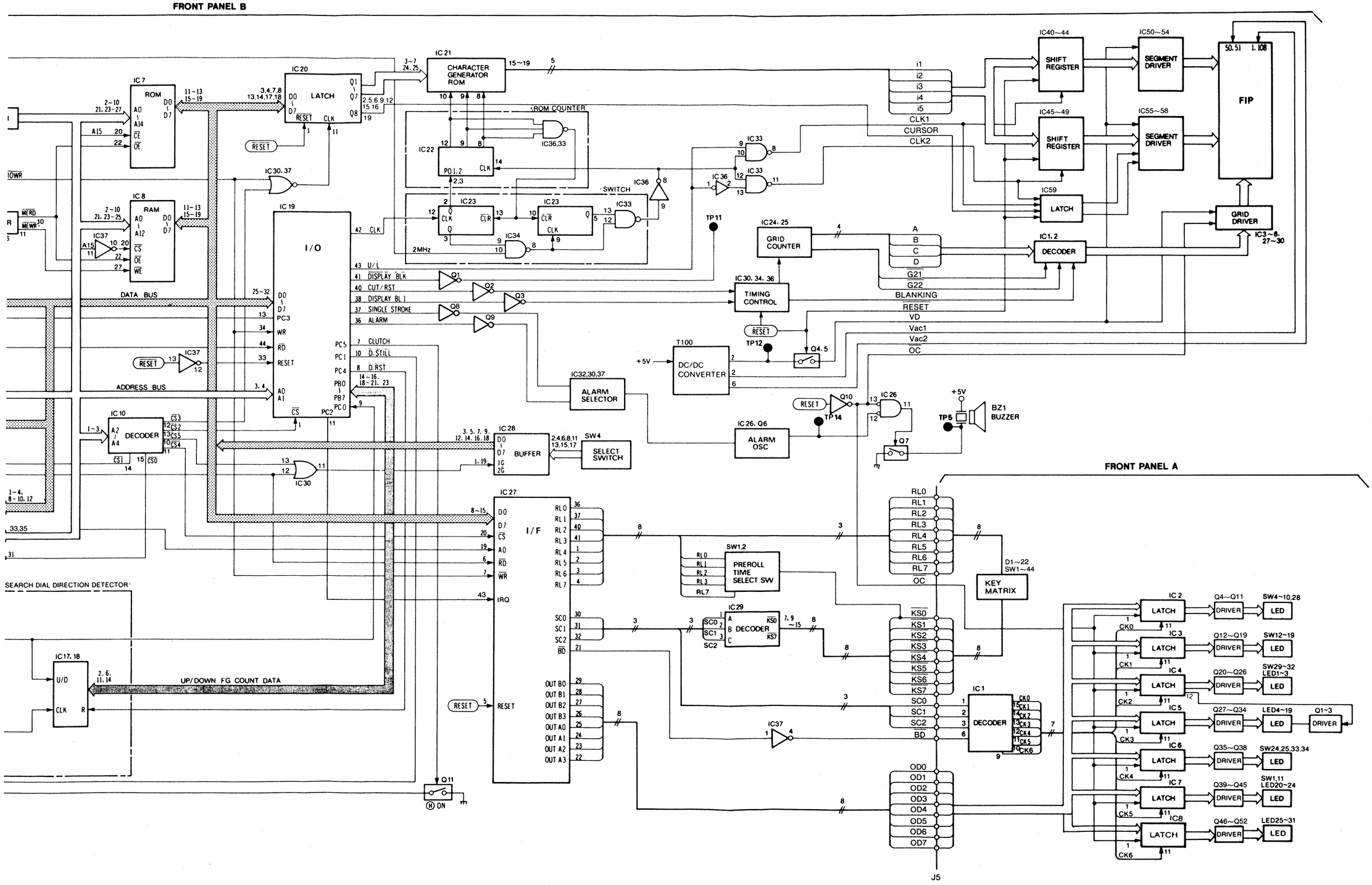
FRONT PANEL B
FRONT PANEL A
IC 7 ROM
IC 8 RAM
IC 20 LATCH
IC 21 CHARACTER GENERATOR ROM
IC 19 I/O
IC 10 DECODER
IC 28 BUFFER
IC 27 I/F
IC 22
IC 23
IC 33
IC 34
IC 36
IC 37
IC 30, 37
IC 30, 34, 36 TIMING CONTROL
IC 24, 25 GRID COUNTER
IC 32, 30, 37 ALARM SELECTOR
IC 26, Q6 ALARM OSC
IC 26
IC 29 DECODER
IC 17, 18
IC 40~44 SHIFT REGISTER
IC 45~49 SHIFT REGISTER
IC 50~54 SEGMENT DRIVER
IC 55~58 SEGMENT DRIVER
IC 59 LATCH
IC 1, 2 DECODER
IC 3~6, 27~30 GRID DRIVER
FIP
T100 DC/DC CONVERTER
BZ1 BUZZER
SW4 SELECT SWITCH
SW1, 2 PREROLL TIME SELECT SW
D1~22 SW1~44 KEY MATRIX
IC 1 DECODER
IC 2 LATCH
IC 3 LATCH
IC 4 LATCH
IC 5 LATCH
IC 6 LATCH
IC 7 LATCH
IC 8 LATCH
Q4~Q11 DRIVER
Q12~Q19 DRIVER
Q20~Q26 DRIVER
Q27~Q34 DRIVER
Q35~Q38 DRIVER
Q39~Q45 DRIVER
Q46~Q52 DRIVER
SW4~10, 28 LED
SW12~19 LED
SW29~32 LED1~3
LED4~19 LED
SW24, 25, 33, 34 LED
SW1, 11 LED20~24
LED25~31 LED
Q1~3 DRIVER
DATA BUS
ADDRESS BUS
SEARCH DIAL DIRECTION DETECTOR
UP/DOWN FG COUNT DATA
ROM COUNTER
SWITCH
2MHz
CLK1
CURSOR
CLK2
BLANKING
RESET
VD
Vac1
Vac2
OC
J5

VIDEO I/O BLOCK DIAGRAM 1/2

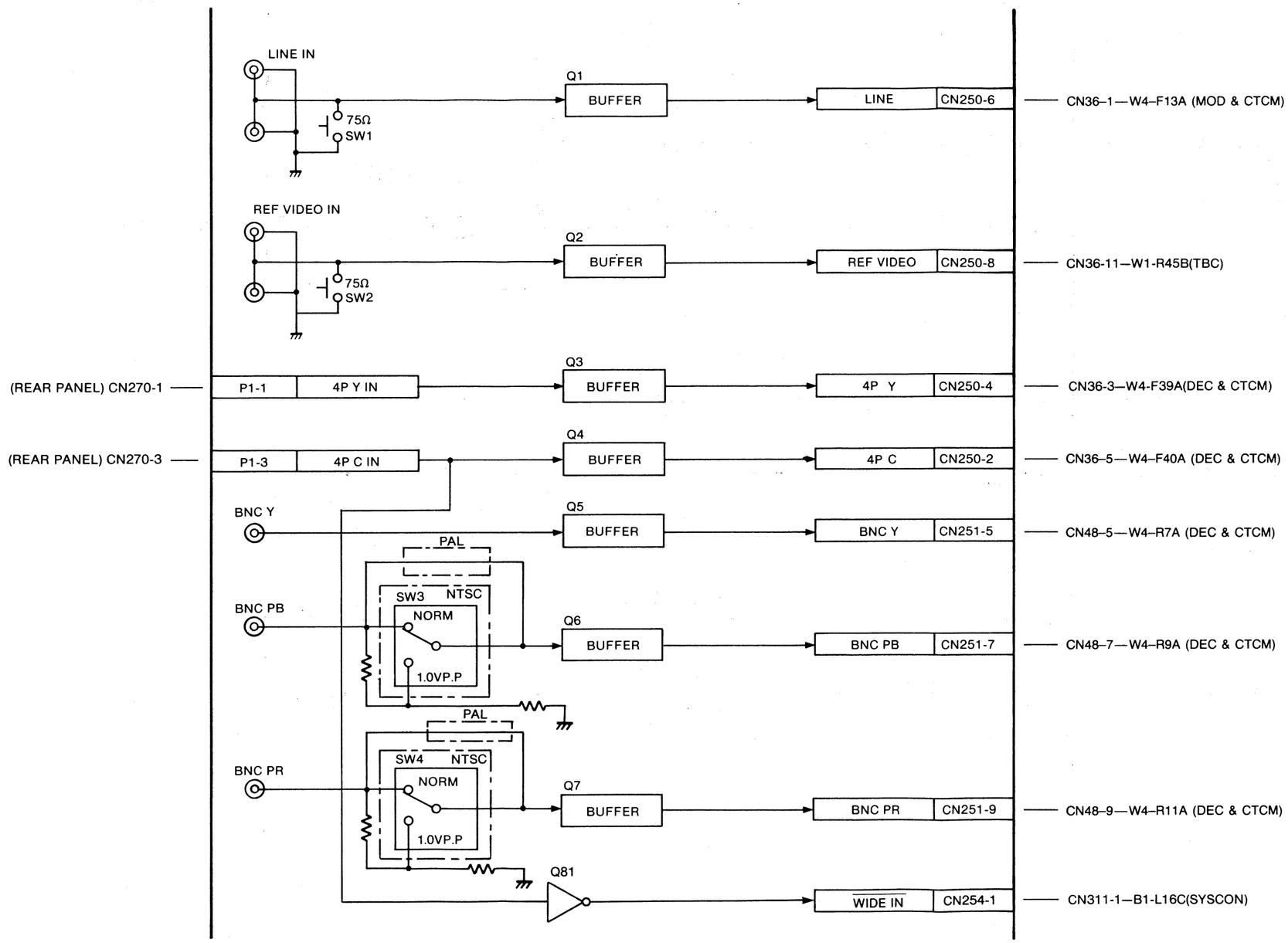

BLK-23

VIDEO I/O BLOCK DIAGRAM 2/2

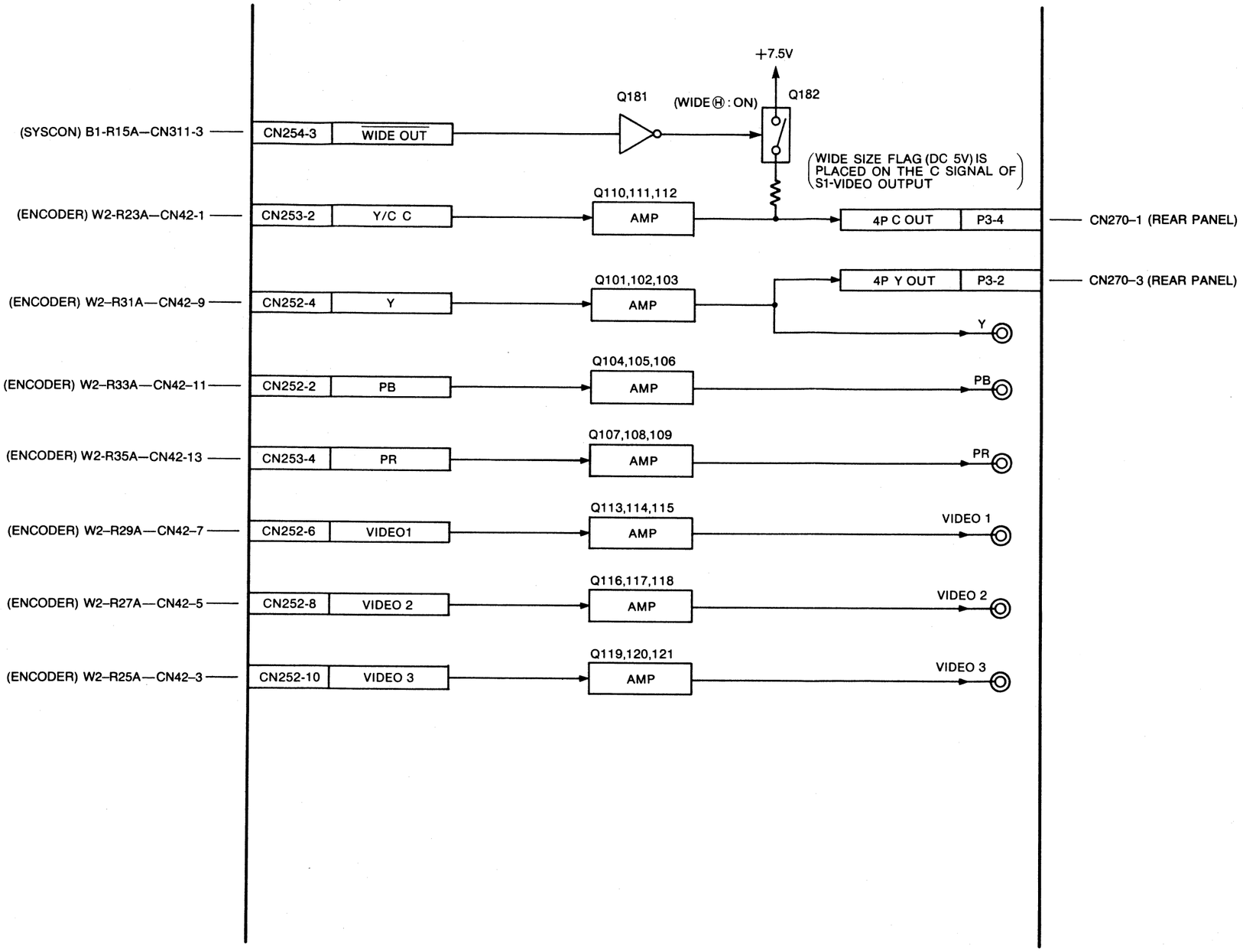

REVERSE SIDE VIDEO I/O BLOCK DIAGRAM

BLK-24

P.C.BOARD DIAGRAM

W0(MOTHER1) P.C.BOARD SCM-25
W1(TBC & SYNC GEN) P.C.BOARD SCM-26
W2(ENCODER) P.C.BOARD SCM-29
W4(DECODER) P.C.BOARD(NTSC) SCM-30
W4(DECODER) SUB P.C.BOARD SCM-30
W4(DECODER) P.C.BOARD(PAL) SCM-33
SENC & P IN P P.C.BOARD SCM-34
W6(AUDIO) P.C.BOARD SCM-35
B0(MOTHER2) P.C.BOARD SCM-36
B1(SYSTEM CONTROL) P.C.BOARD SCM-36
VIDEO I/O P.C.BOARD SCM-37
AUDIO I/O P.C.BOARD SCM-37
FRONT INTERFACE P.C.BOARD SCM-38
FRONT PANEL A P.C.BOARD(AU-65H) SCM-38
FRONT PANEL B P.C.BOARD(AU-65H) SCM-39
METER CHANGE SW P.C.BOARD SCM-39
METER LAMP P.C.BOARD SCM-39

INTERCONNECTION 1/4

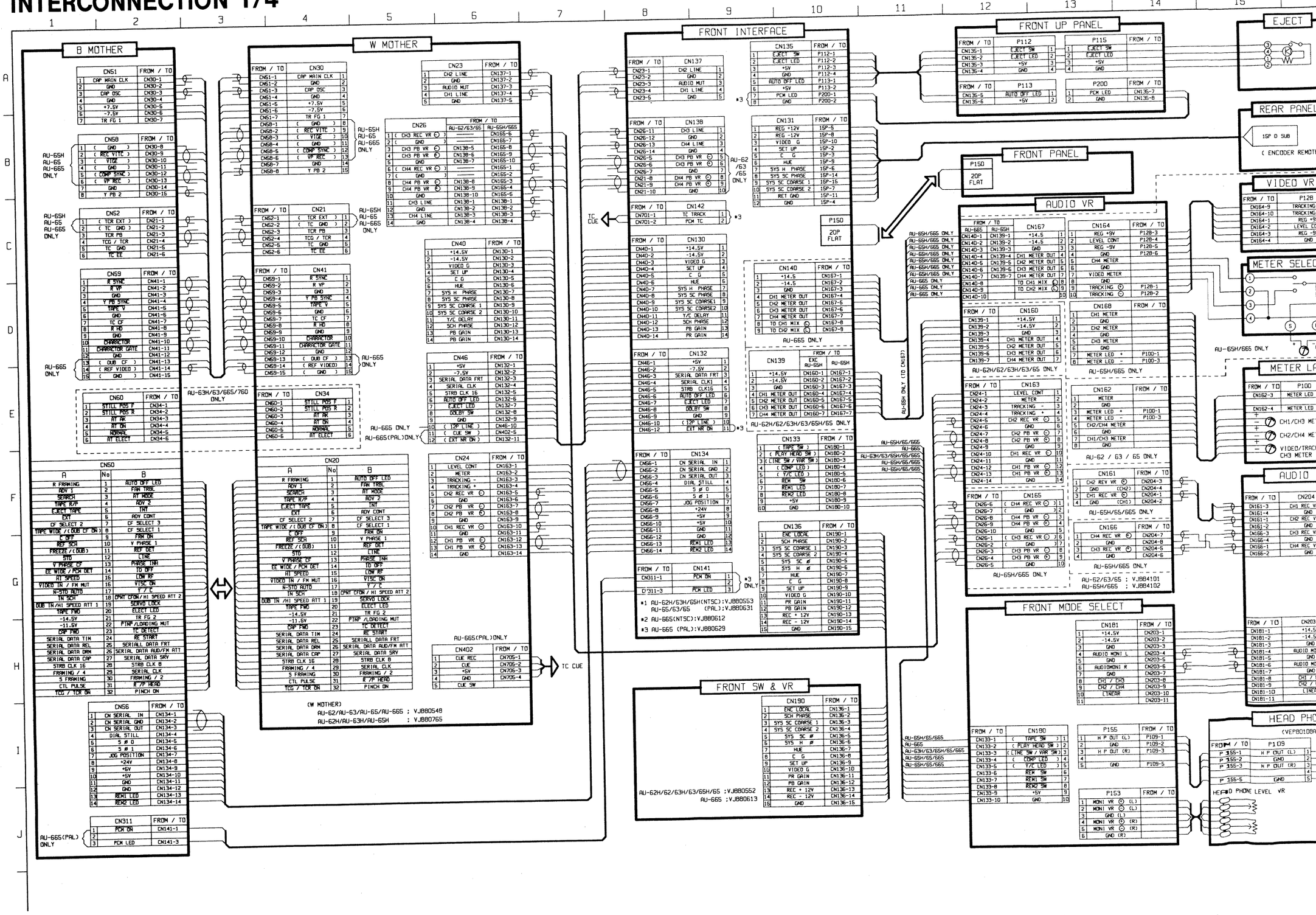

INTERCONNECTION 2/4

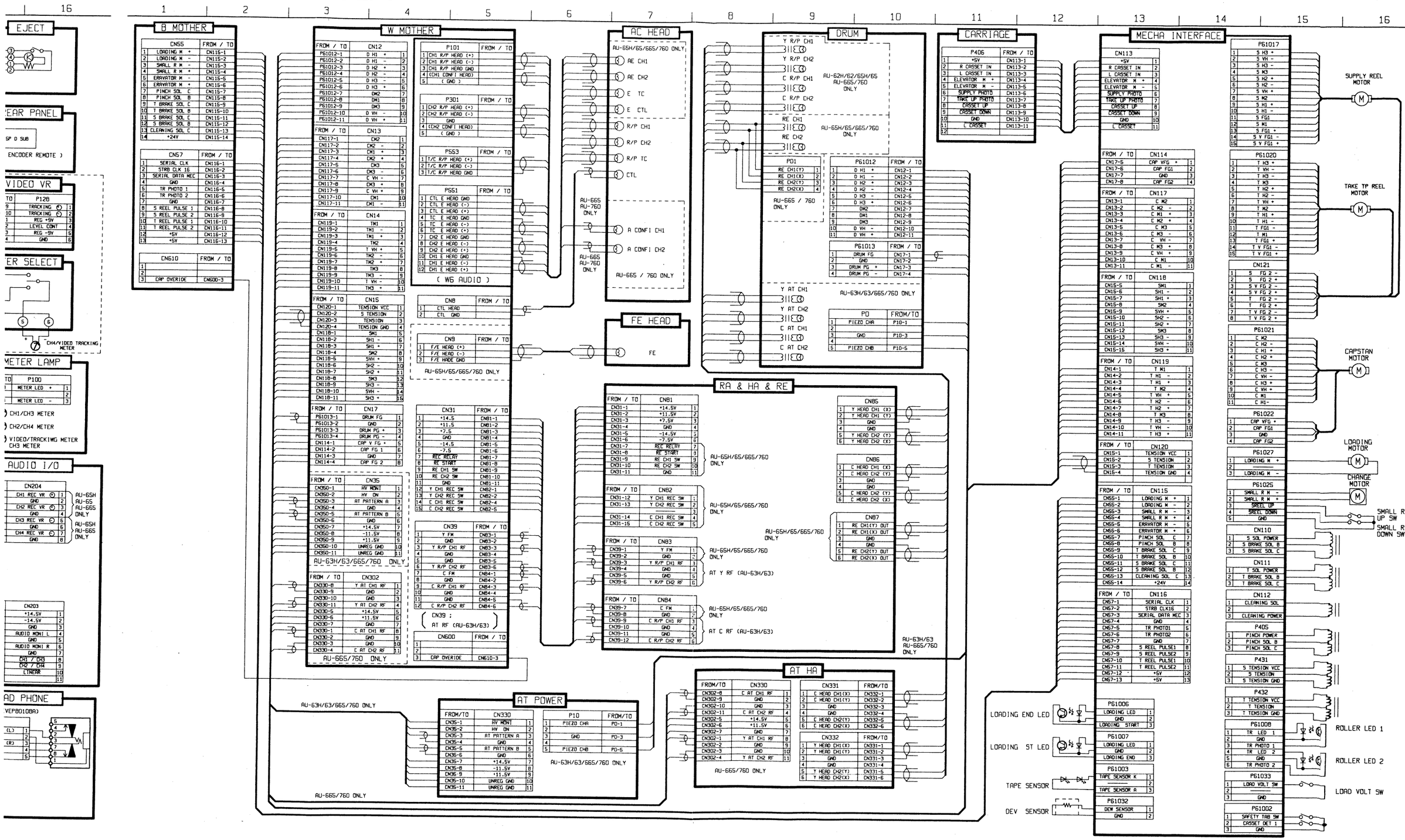

INTERCONNECTION 3/4

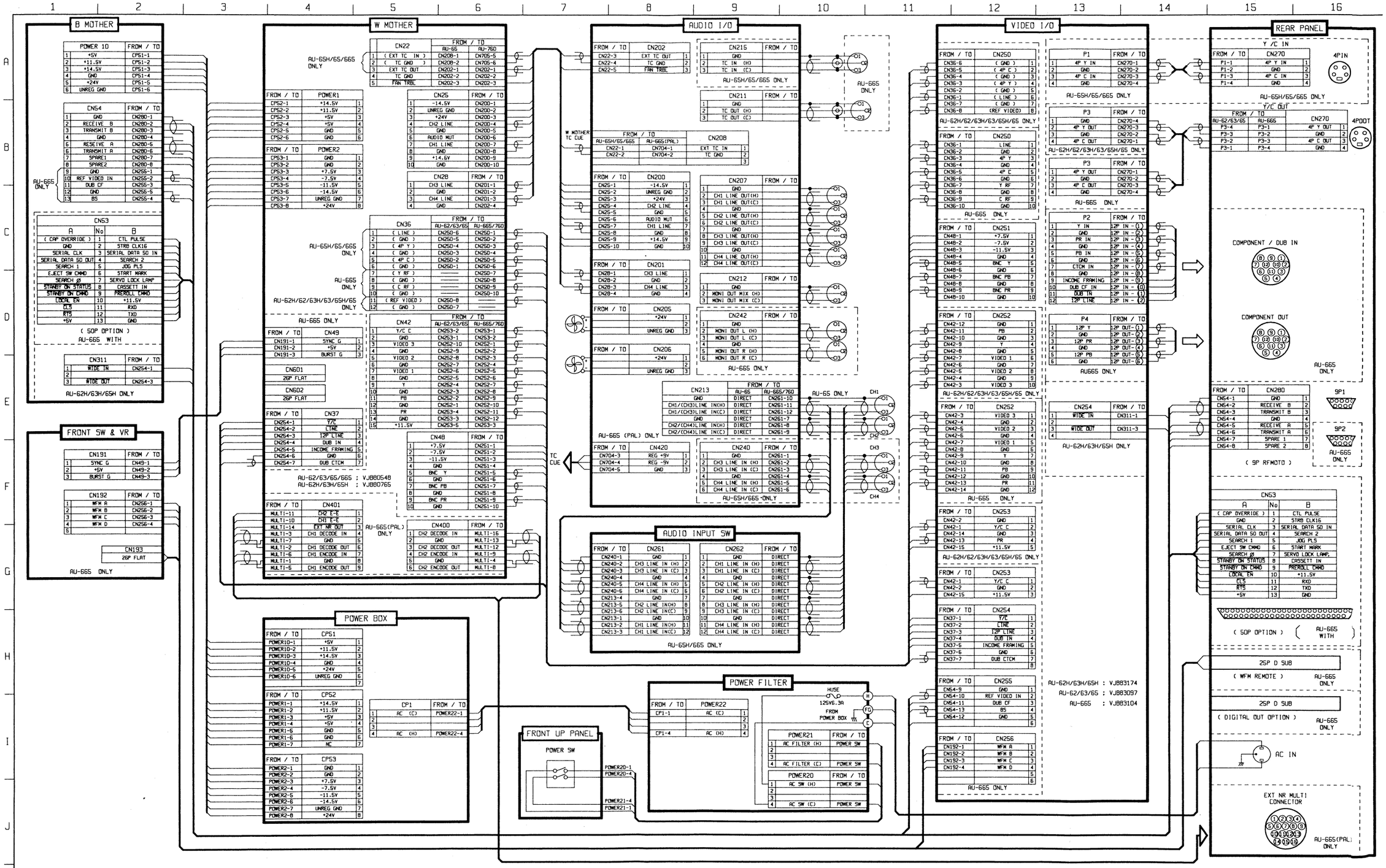

REVERSE SIDE **INTERCONNECTION SCHEMATIC DIAGRAM**

INTERCONNECTION 4/4

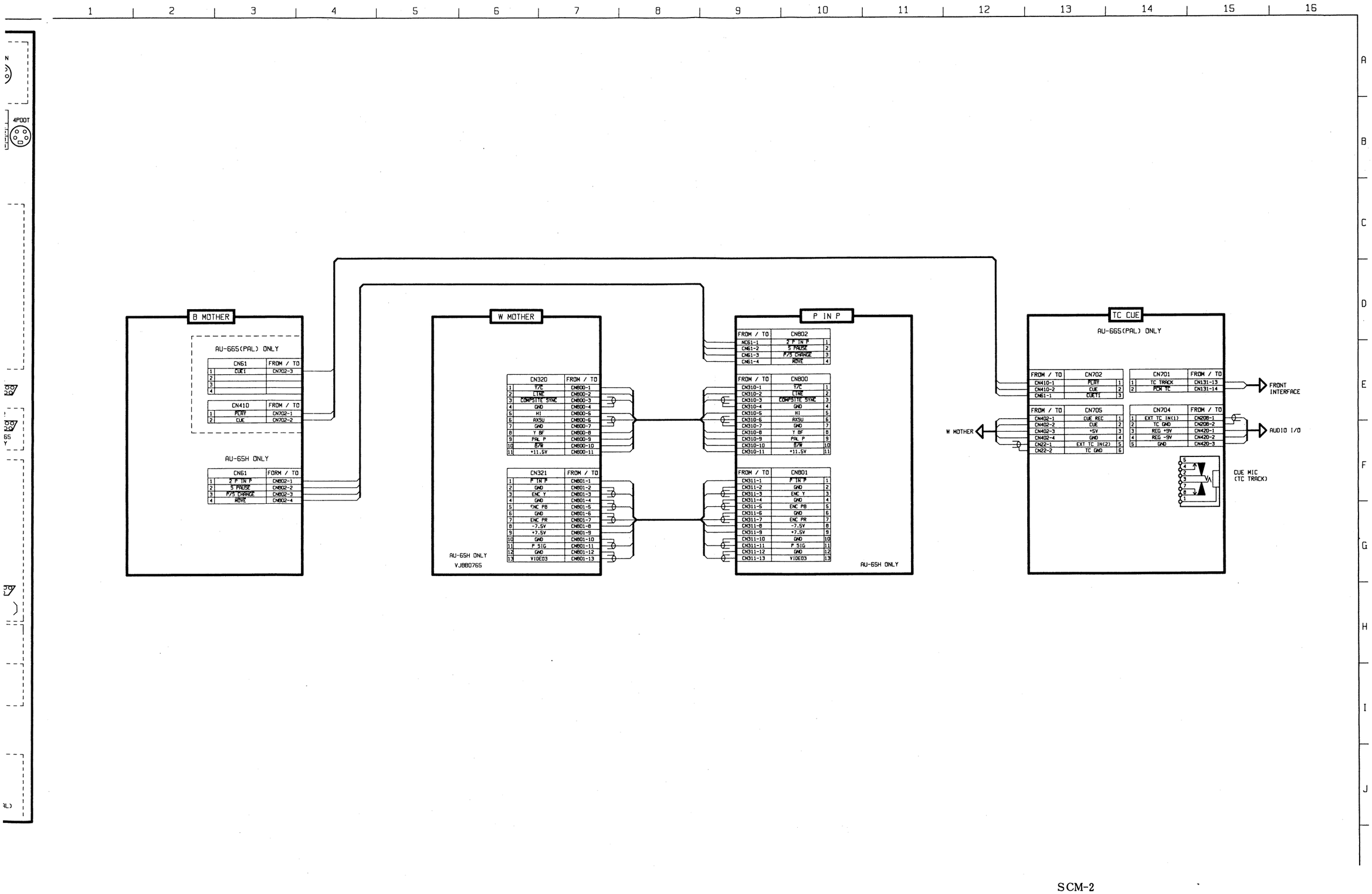

TYPE \ MODEL	AU-65H	AU-63H	AU-62H
NTSC	VEP80765A	VEP80765C	VEP80765B
PAL	VEP80765A	VEP80765C	VEP80765B

W0(W,MOTHER) SCHEMATIC DIAGRAM 1/4

W1-F
VJS2898A100

TBC & SYNC GEN (FRONT)

< W1 > FROM / TO				A	NO	B	FROM / TO			
				GND	1	←				
				+5V	2	←				
				+5V	3	←				
				+11.5V	4	←				
				+11.5V	5	←				
W2-F20A				Y BST	6	GND				
				GND	7	C BST	W2-F20B			
CN20-3B				AT MODE	8	Y/C DELAY	CN40-11			
W5-R40A				H CONT 3	9	H CONT 4	W5-R39A			
W5-R42A				H CONT 1	10	H CONT 2	W5-R41A			
W5-F46A	W3-F22A,B			Y HEAD SW	11	SEARCH	CN20-3A			
W2-F12A				SEARCH ON	12	PB FRAMING 2	W5-R35A			
W5-R36A	W3-F19A,B			Y DOP	13	GND				
W5-R38A	W3-F20A,B	W5-F44A		C DOP	14	GND	CN41-6			
CN41-5				TAPE V	15	Y PB SYNC	W5-F49A	CN41-4	W2-F18A	
W2-F17A				Y CP	16	C PB SYNC	W5-F49B	W2-F18B		
W2-F17B	W3-F17A,B			C CP	17	AGC CP	W3-F16A,B			
CN20-9A	W2-F15A	W3-F14A,B	CN602-1A	C OFF	18	VIDEO IN	W3-R29A,B	W4-R38B	CN20-16A	W5-F32A
CN20-5A				EJECT TAPE	19	E E	W2-F15B	W3-F15A,B	W5-R27B	W5-F46B
				Y SW	20	ADV CONT	CN20-6B			
					21					
W2-F22A				GND	22	←	W2-F22B			
W2-F23A				C DATA 7	23	C DATA 8	W2-F23B			
W2-F24A				C DATA 5	24	C DATA 6	W2-F24B			
W2-F25A				C DATA 3	25	C DATA 4	W2-F25B			
W2-F26A				C DATA 1	26	C DATA 2	W2-F26B			
W2-F27A				C WCK	27	GND	W2-F27B			
W2-F28A				GND	28	←	W2-F28B			
W2-F29A				Y DATA 9	29	Y DATA 9	W2-F29B			
W2-F30A				Y DATA 7	30	Y DATA 7	W2-F30B			
W2-F31A				Y DATA 5	31	Y DATA 5	W2-F31B			
W2-F32A				Y DATA 3	32	Y DATA 3	W2-F32B			
W2-F33A				Y WCK	33	Y DATA 1	W2-F33B			
W2-F34A				GND	34	←	W2-F34B			
CN601-13B				Y 8	35	Y 9				
CN601-12B				Y 6	36	Y 7	CN601-13A			
CN601-11B				Y 4	37	Y 5	CN601-12A			
CN601-10B				Y 2	38	Y 3	CN601-11A			
CN602-2B				Y RCLK	39	Y 1	CN601-10A			
				GND	40	←	CN601-9B			
CN601-8B				PR 7	41	PR 8	CN601-9A			
CN601-7B				PR 5	42	PR 6	CN601-8A			
CN601-6B				PR 3	43	PR 4	CN601-7A			
CN601-5B				PR 1	44	PR 2	CN601-6A			
				GND	45	GND				
CN601-4B				PB 7	46	PB 8	CN601-5A			
CN601-3B				PB 5	47	PB 6	CN601-4A			
CN601-2B				PB 3	48	PB 4	CN601-3A			
CN601-1B				PB 1	49	PB 2	CN601-2A			
				GND	50	←	CN601-1A			

W2-F
VJS2898A100

ENCODER (FRONT)

< W2 > FROM / TO				A	NO	B	FROM / TO			
				GND	1	←				
				+5V	2	←				
				+5V	3	←				
				+11.5V	4	←				
				+11.5V	5	←				
				GND	6	←				
CN500-1	W3-F7A,B			Y PB 1	7	GND				
CN500-2				GND	8	←				
CN500-3	W3-F10A,B			C PB	9	GND				
CN500-4				GND	10	←				
					11					
W1-F12A				SEARCH ON	12	AT SPEED	W3-F12A,B	CN20-15A		
CN20-13B				PHASE INH	13	TAPE FWD	W3-F13A,B	CN20-20A		
CN20-13A				V PHASE CF	14	SERVO LOCK	CN20-19B			
CN20-9A	W1-F18A	W3-F14A,B	CN602-1A	C OFF	15	E E	W5-R27B	W1-F19B	W3-F15A,B	W5-F46B
				GND	16	←				
W1-F16A				Y CP	17	C CP	W1-F17A	W3-F17A,B		
W1-F15B	W5-F49A	CN41-4		C PB SYNC	18	C PB SYNC	W1-F16B	W5-F49B		
					19					
W1-F6A				Y BST	20	C BST	W1-F7B			
					21					
W1-F22A				GND	22	←	W1-F22B			
W1-F23A				C DATA 7	23	C DATA 8	W1-F23B			
W1-F24A				C DATA 5	24	C DATA 6	W1-F24B			
W1-F25A				C DATA 3	25	C DATA 4	W1-F25B			
W1-F26A				C DATA 1	26	C DATA 2	W1-F26B			
W1-F27A				C WCK	27	GND	W1-F27B			
W1-F28A				GND	28	←	W1-F28B			
W1-F29A				Y DATA 9	29	Y DATA 9	W1-F29B			
W1-F30A				Y DATA 7	30	Y DATA 7	W1-F30B			
W1-F31A				Y DATA 5	31	Y DATA 5	W1-F31B			
W1-F32A				Y DATA 3	32	Y DATA 3	W1-F32B			
W1-F33A				Y WCK	33	Y DATA 1	W1-F33B			
W1-F34A				GND	34	←	W1-F34B			
					35					
					36					
					37					
					38					
					39					
				GND	40	←				
					41					
					42					
					43					
W1-R7A				R45C	45	GND				
					46					
					47					
					48					
					49					
				GND	50	←				

W3-F
VJS2898A100

MOD & DEMOD (FRONT)

< W3 > FROM / TO				A	NO	B	FROM / TO			
				GND	1	←				
				+5V	2	←				
				+5V	3	←				
				+11.5V	4	←				
				+11.5V	5	←				
				GND	6	←				
W2-F7A	CN500-1			Y PB 1	7	DUB Y OUT	(DUB OUT 1OPIN 1) (AU-662)			
CN30-1S				Y PB 2	8	←				
CN30-14	CN500-2			GND	9	←	(DUB OUT 1OPIN 2) (AU-662)			
W2-F9A	CN500-3			C PB	10	DUB C OUT	(DUB OUT 1OPIN 5) (AU-662)			
CN50G-4				GND	11	←	(DUB OUT 1OPIN 6) (AU-662)			
CN20-15A	W2-F12B			AT SPEED	12	←				
CN20-20A	W2-F13B			TAPE FWD	13	←				
CN20-9A	W2-F15A	W1-F18A	CN602-1A	C OFF	14	←				
W1-F19B	W2-F15B	W5-R27B	W5-F46B	E E	15	←				
W1-F17B				AGC CP	16	←				
W1-F17A	W2-F17B			C CP	17	←				
				GND	18	←				
W5-R36A	W1-F13A			Y DOP	19	←				
W5-R38A	W1-F14A	W5-F44A		C DOP	20	←				
				GND	21	←	(DUB OUT 1OPIN 4) (AU-662)			
CN20-15B				LOW RF	22	←				
				Y DOP OUT	23	←	(DUB OUT 1OPIN 3) (AU-662)			
				C DOP OUT	24	←	(DUB OUT 1OPIN 7) (AU-662)			
					25	→	R/P HEAD	W1-R33B	W6-R42B	CN20-31B
					26	→	GND	(DUB OUT 1OPIN 8) (AU-662)		
					27	→	Y HEAD SW	W1-F11A	W5-F46A	
					28	→	Y AT HSW	W6-F46B		
					29	→	Y R/P HSW	W6-F47A		
					30	→	GND			
					31	→	C HEAD SW	W5-F47B	W6-F47B	
					32	→	C AT HSW	W6-F48A		
					33	→	C R/P HSW	W6-F48B		
					34	→	GND			
					35	→				
					36	→	Y RF	CN36-7		
					37	→	GND	CN36-8		
					38	→	EE WIDE (PCM DET)	CN20-14A	W4-R40B	
					39	→	GND			
					40	→	Y R/P PB SYNC	W5-F44B		
					41	→	Y R/P RF DET	W5-F45B		
				GND	42	←	GND			
				GND	43	←	(C PCM AT RF)	CN304-1		
				GND	44	←	(GND)	CN304-2		
				GND	45	←	C AT RF	W5-F44A		
				GND	46	←	GND	W5-F45A		
				GND	47	←	C RF	CN36-9	W6-F44B	
				GND	48	←	GND	CN36-10		
				GND	49	←	(Y PCM AT RF)	CN304-3		
				GND	50	←	(GND)	CN304-4		

W1-R
VJS2898A100

TBC & SYCN GEN (REAR)

< W1 > FROM / TO				A	NO	B	FROM / TO			
				GND	1	←				
				+7.5V	2	←				
				-7.5V	3	←				
				-11.5V	4	←				
				-11.5V	5	←				
W2-R9A				ASC	6	GND				
W2-F45A				R45C	7	GND				
W2-R8A				LAG LP	8	Y DOP 2	W2-R8B			
CN40-3	W2-R9A			VIDEO G	9	LEAD LP	W2-R9B			
CN40-5	W2-R10A			C G	10	FRM ON	CN20-9B			
CN40-14				PR GAIN	11	PB GAIN	CN40-13			
				INRDX 2	12					
					13					
W3-R21A,B				INCOME FH	14	COMP SYNC	W4-R27A	W3-R28A,B	CN30-12	CN320-3
W4-R36A				LINE CF	15	COMPNT CF	W4-R36B			
CN41-7				Y/C CF	16	REF CF	W2-R12B	W5-R15A	CN602-6A	
				(EXT CF)	17	(DUB CF)	CN41-13			
CN304-5		(DUB FRAMING SUB P-3)		(HD)	18	(INCOME FRAMING)	CN37-5			
CN304-6			(AU-662)	GND	19	GND	CN41-9			
W5-R15B				FRAMING	20					
CN20-1A	CN602-3A	(DUB FRAMING SUB P-4)		R FRAMING	21	PAL SW	W2-R12A			
CN41-2				R VP	22	RST	W2-R13B			
W2-R13A				R BLK	23	R SYNC	W2-R14B	CN41-1		
W2-R14A				R BP	24	R HD	CN41-8	CN602-2A		
				GND	25	←	CN41-9	CN601-25AB		
				(S SER)	26	TAPE WIDE (DUB CF ON)	CN20-8A			
CN20-11B				REF DET	27	REF SCH	CN20-10A			
W2-R19A				VSC CONT	28	STD	W4-R35B	CN20-12A		
W2-R18A	CN20-10B			V PHASE 1	29	V PHASE 2	W2-R18B			
CN20-7A				CF SELECT 2	30	CF SELECT 3	CN20-7B			
CN20-8B				CF SELECT 1	31	LINE	W4-F21A,B	CN20-12B	CN37-2	
CN20-5B				INT	32	FREEZE / (DUB)	CN20-11A	W4-R38A		
CN20-6A				EXT	33	R/P HEAD	CN20-31B	W5-R42B	W3-F25A,B	
CN20-4B				ADV 2	34	TAPE R/P	CN20-4A			
CN20-2A				ADV 1	35	SYS H PHASE	CN40-7			
CN40-8				SYS SC PHASE	36	SYS SC COARSE 2	CN40-10			
				(SCH COARSE 2)	37	SYS SC COARSE 1	CN40-9			
				(SCH COARSE 1)	38	SCH PHASE	CN40-12			
W2-R39A				D/A PR	39	GND				
				GND	40	D/A PB	W2-R41A			
				GND	41	←				
W2-R43A				D/A Y	42	GND				
				GND	43	←				
					44	GND	CN36-12	CN41-15		
				GND	45	REF VIDEO	CN36-11	CN41-14		
				+11.5V	46	←				
				+11.5V	47	←				
				+5V	48	←				
				+5V	49	←				
				GND	50	←				

W2-R
VJS2898A100

ENCODER (REAR)

< W2 > FROM / TO				A	NO	B	FROM / TO			
				GND	1	←				
				+7.5V	2	←				
				-7.5V	3	←				
				-11.5V	4	←				
				-11.5V	5	←				
W1-R6A				ASC	6	GND				
				GND	7	←				
W1-R8A				LAG LP	8	Y DOP 2	W1-R8B			
CN40-3	W1-R9A			VIDEO G	9	LEAD LP	W1-R9B			
CN40-5	W1-R10A			C G	10					
CN49-1				SYNC G	11	BURST G	CN49-3			
W1-R21B				PAL SW	12	REF CF	W1-R16B	W5-R15A	CN602-5A	
W1-R23A				R BLK	13	RST	W1-R22B			
W1-R24A				R BP	14	R SYNC	W1-R23B	CN41-1		
CN602-1B				TD OFF	15	CHARACTOR GATE	CN41-11			
CN41-10				CHARACTOR	16	GND	CN41-12			
CN41-12				GND	17	←				
W1-R29A	CN20-10B			V PHASE 1	18	V PHASE 2	W1-R29B			
W1-R28A				VSC CONT	19					
CN40-6				HUE	20	SET UP	CN40-4			
					21					
					22					
CN42-1				Y/C C	23	GND				
CN42-2				GND	24	GND				
(CN42-3)	CN321-11			P SIG/(VIDEO3)	25	GND				
(CN42-4)	CN321-10			GND	26	GND				
CN42-5				VIDEO 2	27	GND				
CN42-6				GND	28	GND				
CN42-7				VIDEO 1	29	GND				
CN42-8				GND	30	GND				
CN42-9				Y	31	GND				
CN42-10				GND	32	GND				
CN42-11				PB	33	GND				
CN42-12				GND	34	GND				
CN42-13				PR	35	GND				
CN42-14				GND	36	GND				
				GND	37	GND				
				GND	38	GND				
W1-R39A				D/A PR	39	GND				
				GND	40	GND				
W1-R40B				D/A PB	41	GND				
				GND	42	GND				
W1-R42A				D/A Y	43	GND				
				GND	44	GND				
				GND	45	GND				
CN42-15				+11.5V	46	←				
				+11.5V	47	←				
				+5V	48	←				
				+5V	49	←				
				GND	50	←				

W3-R
VJS2898A100

MOD & DEMOD (REAR)

< W3 > FROM / TO				A	NO	B	FROM / TO			
				GND	1	←				
				+7.5V	2	←				
				-7.5V	3	←				
				-11.5V	4	←				
				-11.5V	5	←				
				GND	6	←				
CN39-3				Y R/P CH1 RF	7	←				
CN39-6				Y R/P CH2 RF	8	←				
CN39-4,5				GND	9	←				
(CN302-1)				(Y AT CH1 RF)	10	←				
(CN302-4)				(Y AT CH2 RF)	11	←				
(CN302-2,3)				(GND)	12	←				
CN39-9				C R/P CH1 RF	13	←				
CN39-12				C R/P CH2 RF	14	←				
CN39-10,11				GND	15	←				
(CN302-8)				(C AT CH1 RF)	16	←				
(CN302-11)				(C AT CH2 RF)	17	←				
(CN302-9)	(CN302-10)			(GND)	18	←				
					19					
					20					
W1-R14A				INCOME FH	21	←				
				GND	22	←				
W4-R23A				Y	23	←				
CN30-8				GND	24	←				
CN30-9				REC VITC	25	←				
CN30-10				VIDE	26	←				
CN30-11				GND	27	←				
CN30-12	W1-R14B	W4-R27A	CN310-3	COMP SYNC	28	←				
CN20-16A	W1-F18B	W4-R38B	W6-F32A	VIDEO IN	29	←				
CN24-2				METER	30	←				
W6-R27A				MOD	31	←				
				GND	32	←				
CN39-1				Y FM	33	←				
CN39-2				GND	34	←				
CN39-8				GND	35	←				
CN39-7				C FM	36	←				
				GND	37	←				
W6-F42B				FM AUDIO	38	←				
				GND	39	←				
					40					
				GND	41	←				
W4-F37B				C CLAMP	42	←				
				GND	43	←				
W4-R44A				CTCM	44	←				
				GND	45	←				
				+11.5V	46	←				
				+11.5V	47	←				
				+5V	48	←				
				+5V	49	←				
				GND	50	←				

W0(W,MOTHER) SCHEMATIC DIAGRAM 2/4

W4-F
VJS2898A10D (AU-65/665/662 ONLY)

< W4 > DEC & CTCM (FRONT)

FROM / TO				A	NO	B	FROM / TO			
				GND	1	←				
				+5V	2	←				
				+5V	3	←				
				+11.5V	4	←				
				+11.5V	5	←				
				GND	6	←				
				GND	7	←				
				GND	8	←				
				GND	9	←				
				GND	10	←				
					11					
CN36-2				GND	12	GND				
CN36-1				LINE	13	GND				
				LINE	14	GND				
					15					
					16					
					17					
				GND	18	←				
CN24-1				LEVEL CONT	19	←				
CN20-16B				VISC ON	20	←				
CN20-12B	(CN37-2)	W1-R31B	CN320-2	LINE	21	←				
CN20-17B	(CN37-1)		CN320-1	Y/C	22	←				
				GND	23	←				
					24					
					25					
					26					
					27					
					28					
					29					
					30					
					31					
					32					
					33					
					34					
					35					
					36					
				GND	37	GND				
CN36-3				4P Y	38	GND				
CN36-4				GND	39	GND				
CN36-5				4P C	40	GND				
CN36-6				GND	41	GND				
				GND	42	GND				
				GND	43	GND				
				GND	44	GND				
				GND	45	GND				
				GND	46	GND				
				GND	47	GND				
				GND	48	GND				
				GND	49	GND				
				GND	50	GND				

W5-F
VJS2898A10D

< W5 > SERVO & DRIVE & AT (FRONT)

FROM / TO				A	NO	B	FROM / TO			
				GND	1	←				
				+5V	2	←				
				+5V	3	←				
				+11.5V	4	←				
				+11.5V	5	←				
CN15-2				S TENSION	6	T TENSION	CN15-3			
CN15-1				TENSION VCC	7	TENSION GND	CN15-4			
				UNREG GND	8	←				
CN15-5				S M1	9	←				
CN15-6				S M1-	10	S M1+	CN15-7			
CN15-8				S M2	11	←				
CN15-9				S VH+	12	←				
CN15-10				S M2-	13	S M2+	CN15-11			
CN15-12				S M3	14	←				
CN15-14				S VH-	15	←				
CN15-13				S M3-	16	S M3+	CN15-15			
CN14-1				T M1	17	←				
CN14-2				T M1-	18	T M1+	CN14-3			
CN14-4				T M2	19	←				
CN14-5				T VH+	20	←				
CN14-6				T M2-	21	T M2+	CN14-7			
CN14-8				T M3	22	←				
CN14-10				T VH-	23	←				
CN14-9				T M3-	24	T M3+	CN14-11			
				UNREG GND	25	←				
CN13-1				C M2	26	←				
CN13-2				C M2-	27	C M1+	CN13-3			
CN13-5				C M3	28	←				
CN13-4				C M2+	29	C M3-	CN13-6			
CN13-7				C VH-	30	←				
CN13-9				C VH+	31	←				
CN13-8				C M3+	32	C M1-	CN13-11			
CN13-10				C M1	33	←				
				UNREG GND	34	←				
CN12-1				D M1+	35	D M1-	CN12-2			
CN12-3				D M2+	36	D M2-	CN12-4			
CN12-5				D M3+	37	D M3-	CN12-6			
CN12-7				D M2	38	←				
CN12-8				D M1	39	←				
CN12-9				D M3	40	←				
CN12-10				D VH-	41	←				
CN12-11				D VH+	42	←				
				UNREG GND	43	←				
W3-F4SB				C AT RF	44	Y R/P PB SYNC	W3-F40A,B			
W3-F46B				GND	45	Y R/P RF DET	W3-F41A,B			
W3-F27A,B	W1-F11A			Y HEAD SW	46	Y AT HSW	W3-F29A,B			
W3-F29A,B				Y R/P HSW	47	C HEAD SW	W3-F31A,B	W6-F47B		
W3-F32A,B				C AT HSW	48	C R/P HSW	W3-F33A,B			
W1-F15B	CN41-4	W2-F18A		Y PB SYNC	49	C PB SYNC	W1-F16B	W2-F18B		
				GND	50	←				

W6-F
VJS2898A10D

< W6 > AUDIO (FRONT)

FROM / TO				A	NO	B	FROM / TO			
CN402-4				GND	1	←				
CN402-3				+5V	2	←				
				+5V	3	←				
				+11.5V	4	←				
				+11.5V	5	←				
CN20-32A				TCG/TCR ON	6	TC DETECT	CN20-23B			
CN402-1				CUE REC	7	CUE	CN402-2			
CN21-3				TCR PB	8	TCR EXT	CN21-1			
CN21-2,5				TC GND	9	TCG/TCR	CN21-4			
CN22-3				EXT TC OUT	10	EXT TC IN	CN22-1			
CN22-4				TC GND	11	TC GND	CN22-2			
				GND	12	GND				
					13	TC EE	CN21-6			
					14					
					15					
					16					
					17					
					18					
					19					
					20					
					21					
					22					
					23					
					24					
					25					
					26					
					27					
					28					
					29					
		(B1 CN41D-2)	(JUMPER)	TAPE N FNT	30	SEARCH	(W6-R13B)	(JUMPER)		
				GND	31	GND				
W1-F18B	W3-R29A,B	W4-R38B	CN20-16A	FM MUT	32					
				GND	33	GND				
CN26-2,5				GND	34	CH3 REC VR (-)	CN26-1			
CN26-4				CH3 PB VR (+)	35	CH3 PB VR (-)	CN26-3			
CN26-12	CN28-2			GND	36	CH3 LINE	CN26-11	CN28-1		
				GND	37	GND				
CN26-7,10				GND	38	CH4 REC VR (-)	CN26-6			
CN26-9				CH4 PB VR (+)	39	CH4 PB VR (-)	CN26-8			
CN26-14	CN28-4			GND	40	CH4 LINE	CN26-13	CN28-3		
				GND	41	GND				
				GND	42	FM AUDIO	W3-R38A,B			
				GND	43	GND				
W1-F14A	W3-F20A,B	W5-R38A		C DOF	44	C RF	W3-F47B	CN36-9		
				GND	45	GND				
W5-R15B	CN31-7			REC RELAY	46	E-E	W1-F19B	W2-F15B	W3-F15A,B	W5-R27B
				GND	47	C HEAD SW	W6-F47B	W3-F31A,B		
W5-R9B	CN20-29B	CN46-4		SERIAL CLK	48	SERIAL DATA AUD/FM ATT	CN20-26B			
W5-R10B	CN20-28A	CN46-5		STRB CLK 16	49	←				
				GND	50					

W4-R
VJS2898A10D (AU-65/665/662 ONLY)

< W4 > DEC & CTCM (REAR)

FROM / TO				A	NO	B	FROM / TO			
				GND	1	←				
CN48-1	CN321-9			+7.5V	2	←				
CN48-2	CN321-8			-7.5V	3	←				
CN48-3				-11.5V	4	←				
				-11.5V	5	←				
CN48-4				GND	6	GND				
CN48-5				BNC Y	7	GND				
CN48-6				GND	8	GND				
CN48-7				BNC PB	9	GND				
CN48-8				GND	10	GND				
CN48-9				BNC PR	11	GND				
CN48-10				GND	12	GND				
					13	GND				
CN321-2				GND	14	GND				
CN321-3				ENC Y	15	GND				
CN321-4				GND	16	GND				
CN321-5				ENC PB	17	GND				
CN321-6				GND	18	GND				
CN321-7				ENC PR	19	GND				
					20					
					21	GND				
				GND	22	GND				
W3-R23A,B				Y	23	GND				
				GND	24	GND				
					25	GND				
					26	GND				
CN30-12	W1-R14B	W3-R28A,B	CN320-3	COMP SYNC	27	GND				
CN30-11	CN320-4			GND	28	GND				
W5-R25A				(DUB Y DOP)	29	GND				
W5-R26A				(DUB C DOP)	30	GND	CN320-7			
CN320-5				H1	31	RXSU	CN320-5			
CN320-8				Y BF	32	PXLP	CN320-9			
CN30-11				GND	33	GND				
CN20-18A				TN SCH	34	N-STD AUTO	CN20-17A			
CN20-18B	W6-R13A			CPNT CF ON	35	STD	CN20-12A	W1-R28B		
W1-R15A				LINE CF	36	COMPNT CF	W1-R15B			
CN30-13				VP REC	37	C CLAMP	W3-R42A,B			
CN20-11A	W1-R32B			FREEZE /(DUB)	38	VIDEO IN	W3-R29A,B	CN20-16A	W1-F18B	W6-F32A
CN320-10				B/W	39					
					40	EE WIDE /(PCM DET)	W3-F38AB	CN20-14A		
				GND	41	GND				
(CN37-7)				(DUB CTCM)	42	GND				
(CN37-6)				GND	43	GND				
W3-R44A,B				CTCM	44	GND				
				GND	45	GND				
(CN302-5)				+14.5V	46	←				
(CN302-6)	CN320-11			+11.5V	47	←				
				+5V	48	←				
				+5V	49	←				
(CN302-7)				GND	50	←				

W5-R
VJS2898A10D

< W5 > SERVO & DRIVE & AT (REAR)

FROM / TO				A	NO	B	FROM / TO			
CN3D-2	CN31-4			GND	1	←	CN30-4			
CN31-3	CN30-5			+7.5V	2	←				
CN31-6	CN30-6	CN46-2		-7.5V	3	←				
CN35-8				-11.5V	4	←				
CN31-5	CN40-2			-14.5V	5	←				
CN35-10,11				UNREG GND	6	←				
CN20-30A				S FRAMING	7	+24V				
CN30-1				CAP MAIN CLK	8	CAP OSC	CN30-3			
CN20-27A				SERIAL DATA CAP	9	SERIAL CLK	CN20-29B	W6-F48A	CN46-4	
CN20-25A				SERIAL DATA REL	10	STRB CLK 16	CN20-28A	W6-F49A	CN46-5	
CN20-26A				SERIAL DATA DRM	11	STRB CLK 8	CN20-28B			
CN20-24A				SERIAL DATA TIM	12	SERIAL DATA SRV	CN20-27B			
CN600-3				S REEL PULSE 1	13	T REEL PULSE 1	CN600-1			
CN30-7					14	TR FG 2	CN20-21B			
W1-R16B	W2-R12B	CN602-6A		REF CF	15	FRAMING	W1-R20A			
CN20-30B				FRAMING /2	16	FRAMING /4	CN20-29A			
CN24-4				TRACKING +	17	CAP FWD	CN20-23A			
CN24-3				TRACKING -	18	CTL PULSE	CN20-31A			
CN31-8	CN20-24B				19	REC RELAY	CN31-7	W6-F46A		
CN31-9					20	RE CH2 SW	CN31-10			
CN31-12					21	Y CH1 REC SW	CN31-14			
CN31-13					22	Y CH2 REC SW	CN31-15			
CN300-1					23	(Y CH1 PCM GATE)	CN300-4			
CN300-2					24	(Y CH2 PCM GATE)	CN300-5			
W4-29A					25	(PCM HSW)	CN301-1			
W4-30A					26	(PCM GATE)	CN301-2			
W3-R31A,B					27	REC	W6-F46B	W2-F15B	W1-F19B	W3-F15A,B
CN600-3					28	DRUM FG	CN17-1			
CN300-3,6	CN301-3				29	GND	CN17-2			
CN17-5					30	DRUM PG +	CN17-3			
CN17-6					31	DRUM PG -	CN17-4			
CN17-7					32	CTL GND	CN8-2			
CN17-8					33	CTL HEAD	CN8-1			
					34	CTL GND	CN8-2			
W1-F12B				PB FRAMING 2	35	(STILL POS F)	CN34-1			
W1-F13A	W3-F19A,B				36	(STILL POS R)	CN34-2			
					37	(AT AK)	CN34-3			
W1-F14A	W3-F20A,B	W6-F44A			38	PINCH ON	CN20-32B			
W1-F9B				H CONT 4	39	(AT ON)	CN34-4			
W1-F9A				H CONT 3	40	(NORMAL)	CN34-5			
W1-F10B				H CONT 2	41	(AT EJECT)	CN34-6			
W1-F10A				H CONT 1	42	R/P SPEED	W1-R33B	W3-F25A,B	CN20-31B	
CN35-1				(HV ON)	43	(HV MON1)	CN35-2			
CN35-3					44	(AT PATTERN A)	CN35-5			
CN35-4				GND	45	←	CN35-6			
CN31-1	CN35-7	CN40-1		+14.5V	46	←				
CN31-2	CN35-9			+11.5V	47	←				
				+5V	48	←				
				+5V	49	←				
				GND	50	←				

W6-R
VJS2898A10D

< W6 > AUDIO (REAR)

FROM / TO				A	NO	B	FROM / TO			
				GND	1	←				
				+7.5V	2	←				
				-7.5V	3	←				
				-11.5V	4	←				
CN25-1				-14.5V	5	←				
CN25-2				UNREG GND	6	←				
CN25-3				+24V	7	←				
				GND	8	GND				
CN9-1				F/E HEAD (+)	9	F/E HEAD (-)	CN9-2			
CN9-3				F/E HEAD GND	10	←				
				GND	11	GND				
CN20-19A	CN37-4			HI SPEED ATT 1	12	DOLBY SW	CN46-8			
CN20-18B	W4-R35A			HI SPEED ATT 2	13	PINP /LOADING MUT	CN20-22B	CN321-1		
				GND	14	GND				
					15					
					16					
					17					
					18					
					19					
					20					
					21					
					22					
					23					
					24					
					25					
					26					
					27					
				GND	28	GND				
CN400-2				GND	29	CH2 DECODE IN	CN400-1			
				GND	30	CH2 DECODE OUT	CN400-3			
CN400-5				GND	31	CH2 ENCODE IN	CN400-4			
				GND	32	CH2 ENCODE OUT	CN400-6			
CN24-6,9				GND	33	CH2 REC VR (-)	CN24-5			
CN24-8				CH2 PB VR (+)	34	CH2 PB VR (-)	CN24-7			
CN23-2	CN25-5			GND	35	CH2 LINE	CN25-4	CN23-1		
CN23-3	CN25-6			AUDIO MUT	36	CH2 E-E	CN401-1			
CN401-3				EXT NR OUT	37	CH1 E-E	CN401-2			
CN46-12				EXT NR ON	38	CH1 DECODE IN	CN401-4			
CN401-5				GND	39	CH1 DECODE OUT	CN401-6			
CN401-8				GND	40	CH1 ENCODE IN	CN401-7			
				GND	41	CH1 ENCODE OUT	CN401-9			
CN24-11,14				GND	42	CH1 REC VR (-)	CN24-10			
CN24-13				CH1 PB VR (+)	43	CH1 PB VR (-)	CN24-12			
CN23-5	CN25-8			GND	44	CH1 LINE	CN25-7	CN23-4		
				GND	45	←				
CN303-1	CN25-9			+14.5V	46	←	CN25-9			
CN303-2				+11.5V	47	←				
				+5V	48	←				
				+5V	49	←				
CN303-3				GND	50	←	CN25-10			

W,MOTHER
SCHEMATIC DIAGRAM

TYPE \ MODEL	AU-65H	AU-63H	AU-62H
NTSC	VEP80765A	VEP80765C	VEP80765B
PAL	VEP80765A	VEP80765C	VEP80765B

WO(W,MOTHER) SCHEMATIC DIAGRAM 3/4

FRONT

VJP1232T

CN23		FROM / TO		
1	CH2 LINE	W6-R36B		
2	GND	W6-R35A		
3	AUDIO MUT	W6-R36R		
4	CH1 LINE	W6-R44B		
5	GND	W6-R44A		

VJP1931T

CN24		FROM / TO			
1	LEVEL CONT	W4-F19A,B			
2	METER	W3-R30A,B			
3	TRACKING -	W6-R19A			
4	TRACKING +	W6-R17A			
5	(CH2 REC VR ⊖)	W6-R33B			AU-65H AU-65/665/662/760 ONLY
6	(GND)	W6-R33A			
7	CH2 PB VR ⊖	W6-R34B			
8	CH2 PB VR ⊕	W6-R34A			
9	GND	W6-R33A			
10	(CH1 REC VR ⊖)	W6-R42B			AU-65H AU-65/665/662/760 ONLY
11	(GND)	W6-R42R			
12	CH1 PB VR ⊖	W6-R43B			
13	CH1 PB VR ⊕	W6-R43A			
14	GND	W6-R42A			

VJP1931T

CN26		FROM / TO			
1	(CH3 REC VR ⊖)	W6-F34B			AU-65H AU-665/662/760 ONLY
2	(GND)	W6-F34R			
3	CH3 PB VR ⊖	W6-F36B			
4	CH3 PB VR ⊕	W6-F35A			
5	GND	W6-F34R			
6	(CH4 REC VR ⊖)	W6-F38B			AU-65H AU-665/662/760 ONLY
7	(GND)	W6-F38R			
8	CH4 PB VR ⊖	W6-F39B			
9	CH4 PB VR ⊕	W6-F39R			
10	GND	W6-F38R			
11	CH3 LINE	W6-F36B	CN28-1		
12	GND	W6-F36R	CN28-2		
13	CH4 LINE	W6-F40B	CN28-3		
14	GND	W6-F40R	CN28-4		

VJP1929T

CN40		FROM / TO		
1	+14.5V	W5-R46A		
2	-14.5V	W5-R5R,B		
3	VIDEO G	W1-R5B	W2-R9A	
4	SET UP	W2-R20B		
5	C G	W1-R10A	W2-R10A	
6	HUE	W2-R20R		
7	SYS H PHASE	W1-R35B		
8	SYS SC PHASE	W1-R36A		
9	SYS SC COARSE 1	W1-R37B		
10	SYS SC COARSE 2	W1-R36B		
11	Y/C DELAY	W1-F8B		
12	SCH PHASE	W1-R38B		
13	PB GAIN	W1-R11B		
14	PR GAIN	W1-R11A		

VJP1252T

CN46		FROM / TO		
1	+5V	W5-F2A,B		
2	-7.5V	W5-R3A,B		
3	SERIAL DATA FRT	CN20-25B		
4	SERIAL CLK	CN20-29B	W5-R3B	W6-F48A
5	STRB CLK 1B	CN20-26A	W5-R10B	W6-F49A
6	AUTO OFF LED	CN20-1B		
7	REMOT LED	CN20-20B		
8	DOLBY SW	W6-R12B		
9	GND			
10	(12P LINE)	(CN37-3)		RU-665/662/760 ONLY
11	(COIL SW)	CN402-5		RU-760 ONLY
12	(EXT NR ON)	W6-R38A	CN132-11	

VJP1243T (AU-665/662 ONLY)

CN49		FROM / TO		
1	SYNC G	W2-R11A		
2	+5V			
3	BURST G	W2-R11B		

MECHA

VJP1229T

CN8		FROM / TO		
1	CTL HEAD	W5-R33B		
2	CTL GND	W5-R32B	W5-R34B	

VJP1230T (AU-65H/65/665/662/760 ONLY)

CN9		FROM / TO		
1	F/E HEAD ⊕	W6-R9A		
2	F/E HEAD ⊖	W6-R9B		
3	F/E HEAD GND	W6-R10A,B		

VJP1511T

CN12		FROM / TO		
1	D H1+	W6-F35A		
2	D H1-	W6-F35B		
3	D H2+	W6-F36A		
4	D H2-	W6-F36B		
5	D H3-	W6-F37A		
6	D H3+	W6-F37B		
7	D M2	W6-F38A,B		
8	D M1	W6-F39A,B		
9	D M3	W6-F40A,B		
10	D VH-	W6-F41A,B		
11	D VH+	W6-F42A,B		

VJP1511T

CN13		FROM / TO		
1	C M2	W6-F26A,B		
2	C H2-	W6-F27A		
3	C H1+	W6-F27B		
4	C H2+	W6-F29A		
5	C M3	W6-F28A,B		
6	C H3-	W6-F29B		
7	C VH-	W6-F30A,B		
8	C H3+	W6-F32A		
9	C VH+	W6-F31A,B		
10	C M1	W6-F33A,B		
11	C H1-	W6-F32B		

VJP1511T

CN14		FROM / TO		
1	T M1	W6-F17A,B		
2	T H1-	W6-F18A		
3	T H1+	W6-F18B		
4	T M2	W6-F19A,B		
5	T VH+	W6-F20A,B		
6	T H2-	W6-F21A		
7	T H2+	W6-F21B		
8	T M3	W6-F22A,B		
9	T H3-	W6-F24A		
10	T VH-	W6-F23A,B		
11	T H3+	W6-F24B		

VJP1932T

CN15		FROM / TO		
1	TENSION VCC	W5-F7A		
2	S TENSION	W5-F6A		
3	T TENSION	W5-F6B		
4	TENSION GND	W5-F7B		
5	S M1	W6-F9A,B		
6	S H1-	W6-F10A		
7	S H1+	W6-F10B		
8	S M2	W6-F11A,B		
9	S VH+	W6-F12A,B		
10	S H2-	W6-F13A		
11	S H2+	W6-F13B		
12	S M3	W6-F14A,B		
13	S H3-	W6-F16A		
14	S VH-	W6-F15A,B		
15	S H3+	W6-F16B		

VJP1235T

CN17		FROM / TO		
1	DRUM FG	W5-R28B		
2	GND	W5-R29B		
3	DRUM PG+	W5-R30B		
4	DRUM PG-	W5-R31B		
5	CAP V FG+	W5-R30A		
6	CAP FG 1	W5-R31A		
7	GND	W5-R32A		
8	CAP FG 2	W5-R33A		

REAR

VJP1232T

CN22		FROM / TO			
1	(EXT TC IN)	W6-F10B			AU-65H AU-65/665/662/760 ONLY
2	(TC GND)	W6-F11B			
3	EXT TC OUT	W6-F10A			
4	TC GND	W6-F11A			
5	FAN TRBL	CN20-28			

VJP1237T

CN25		FROM / TO		
1	-14.5V	W6-R5A,B		
2	UNREG GND	W6-R6A,B		
3	+24V	W6-R7A,B		
4	CH2 LINE	W6-R36B	CN23-1	
5	GND	W6-R35A	CN23-2	
6	AUDIO MUT	W6-R36A	CN23-3	
7	CH1 LINE	W6-R44B	CN23-4	
8	GND	W6-R44A	CN23-5	
9	+14.5V	W6-R46A,B	CN303-1	
10	GND	W6-R50A,B	CN303-3	

VJP1231T

CN28		FROM / TO		
1	CH3 LINE	W6-F36B	CN26-11	
2	GND	W6-F36A	CN26-12	
3	CH4 LINE	W6-F40B	CN26-13	
4	GND	W6-F40A	CN26-14	

VJP1239T

CN36		FROM / TO			
1	(LINE)	W4-F13A			AU-65H AU-65/665/662/760 ONLY
2	(GND)	W4-F12A			
3	(4P Y)	W4-F38A			
4	(GND)	W4-F39A			
5	(4P C)	W4-F40A			
6	(GND)	W4-F41A			
7	(Y RF)	W3-F36B			
8	(GND)	W3-F37B			AU-665/662/760 ONLY
9	(C RF)	W3-F47B	W6-F44B		
10	(GND)	W3-F48B			
11	(REF VIDEO)	W1-R45B	CN41-15		AU-65H/63H/62H AU-65/63/62 ONLY
12	(GND)	W1-R44B	CN41-14		

VJP1234T (AU-665/662 ONLY) (VJB80548 ONLY)

CN37		FROM / TO		
1	Y/C	W4-F22R,B	CN20-17B	
2	LINE	W4-F21A,B	CN20-12B	W1-R31B
3	12P LINE	CN46-10		
4	DUB IN /W1 SPEED ATT 1	W6-R12A	CN20-19A	
5	INCOME FRAMING	W1-R18B		
6	GND	W4-R43A		
7	DUB CTCM	W4-R42A		

VJP1932T

CN42		FROM / TO		
1	Y/C C	W2-R23A		
2	GND	W2-R24A		
3	P SIG(VIDEO 3)	(W2-R25A)	CN311-11	
4	GND	W2-R26A		
5	VIDEO 2	W2-R29A		
6	GND	W2-R28A		
7	VIDEO 1	W2-R29A		
8	GND	W2-R30A		
9	Y	W2-R31A		
10	GND	W2-R32A		
11	PB	W2-R33A		
12	GND	W2-R34A		
13	PR	W2-R35A		
14	GND	W2-R36A		
15	+11.5V	W2-R46A		

VJP1237T

CN48		FROM / TO		
1	+7.5V	W4-R2A,B		
2	-7.5V	W4-R3A,B		
3	-11.5V	W4-R4A,B		
4	GND	W4-R5A,B		
5	(BNC Y)	W4-R7A		
6	(GND)	W4-R8A		
7	(BNC PB)	W4-R9A		
8	(GND)	W4-R10A		
9	(BNC PR)	W4-R11A		
10	(GND)	W4-R12A		

RU-65H AU-65/665/662/760 ONLY

VJP1233T (PAL ONLY)

CN400		FROM / TO		
1	CH2 DECODE IN	W6-R29B		
2	GND	W6-R29A		
3	CH2 DECODE OUT	W6-R30B		
4	CH2 ENCODE IN	W6-R31B		
5	GND	W6-R31A		
6	CH2 ENCODE OUT	W6-R32B		

VJP1236T (PAL ONLY)

CN401		FROM / TO		
1	CH2 EE	W6-R36B		
2	CH1 EE	W6-R37B		
3	EXT NR OUT	W6-R37A		
4	CH1 DECODE IN	W6-R38B		
5	GND	W6-R39A		
6	CH1 DECODE OUT	W6-R39B		
7	CH1 ENCODE IN	W6-R40B		
8	GND	W6-R40A		
9	CH1 ENCODE OUT	W6-R41B		

VJP1232T (PAL ONLY)

CN402		FROM / TO		
1	CUE REC	W6-F7A		
2	CUE	W6-F7B		
3	+5V	W6-F2A,B		
4	GND	W6-F1A,B		
5	CUE SW	CN46-11		

VJP1231T (SPARE)

CN500		FROM / TO		
1	Y PB 1	W3-F7A,B	W2-F7A	
2	GND	W3-F9A,B	W2-F8A,B	CN30-14
3	C PB	W3-F10A,B	W2-F9A	
4	GND	W3-F11A,B	W2-F10A,B	

PCM

VJP1230T (PCM ONLY)

CN301		FROM / TO		
1	PCM H SW	W6-R25B		
2	PCM GATE	W6-R26B		
3	GND	W6-R29A		

VJP1230T

CN303		FROM / TO		
1	+14.5V	W6-R46A,B		
2	+11.5V	W6-R47A,B		
3	GND	W6-R50A,B		

VJP1233T

CN304		FROM / TO		
1	C PCM AT RF	W3-F43B		
2	GND	W3-F44B		
3	Y PCM AT RF	W3-F49B		
4	GND	W3-F50B		
5	MD	W1-R18A		
6	GND	W1-R19A		

AT H.A

VJP1511T (AU-665/662/760 ONLY)

CN302		FROM / TO		
1	Y AT CH1 RF	W3-R10A,B		
2	GND	W3-R12A,B		
3	GND	W3-R12A,B		
4	Y AT CH2 RF	W3-R11A,B		
5	+14.5V	W4-W46A,B		
6	+11.5V	W4-R47A,B		
7	GND	W4-R5QA,B		
8	C AT CH1 RF	W3-R16A,B		
9	GND	W3-R18A,B		
10	GND	W3-R18A,B		
11	C AT CH2 RF	W3-R17A,B		

(VJB80548 ONLY)

P IN P

VJP3079 (AU-65H ONLY)

CN320		FROM / TO		
1	Y/C			
2	LINE			
3	COMPOSITE SYNC	W4-R27A		
4	GND	W4-R28A,B		
5	HI	W4-R31A		
6	AXSW	W4-R31B		
7	GND	W4-R30B		
8	Y RF	W4-R32A		
9	PAL P	W4-R32B		
10	B/W	W4-R39A		
11	+11.5V	W4-R47A,B		

VJP3081 (AU-65H ONLY)

CN321		FROM / TO		
1	PINP	W6-R13B	CN20-22B	
2	GND	W4-R14AB		
3	ENC Y	W4-R15A		
4	GND	W4-R16AB		
5	ENC PB	W4-R17A		
6	GND	W4-R18A,B		
7	ENC PR	W4-W19A		
8	-7.5V	W4-R3A,B		
9	+7.5V	W4-R2A,B		
10	GND	W2-R25A,B		
11	P SIG	W4-R25A		
12	GND	W2-R26A,B		
13	VIDEO 3	CN42-3		

(VJB80765 ONLY)

AU-62H/63H ONLY

AT POWER

VJP1251T (AU-63H/63/665/662/760 ONLY)

CN35		FROM / TO		
1	HV MONI	W6-R43B		
2	HV ON	W6-R43B		
3	AT PATTERN A	W6-R44A		
4	GND	W6-R45A		
5	AT PATTERN B	W6-R44B		
6	GND	W6-R45B		
7	+14.5V	W6-R46A		
8	-11.5V	W6-R4A,B		
9	+11.5V	W6-R47A,B		
10	UNREG GND	W6-R6A,B		
11	UNREG GND	W6-R6A,B		

RA.HA.RE

VJP1932T

CN31		FROM / TO		
1	+14.5V	W6-R46A	CN35-7	
2	+11.5V	W6-R47A	CN35-9	
3	+7.5V	W6-R2A,B	CN30-5	
4	GND	W6-R1A,B	CN30-4	
5	-14.5V	W6-R5A,B		
6	-7.5V	W6-R3A,B	CN30-6	
7	REC RELAY	W6-R19B	W6-F46A	
8	RE START	W6-R19A	CN20-24B	
9	RE CH1 SW	W6-R20A		
10	RE CH2 SW	W6-R20B		
11	GND			
12	Y CH1 REC SW	W6-R21A		
13	Y CH2 REC SW	W6-R22A		
14	C CH1 REC SW	W6-R21B		
15	C CH2 REC SW	W6-R22B		

VJP1239T

CN39		FROM / TO		
1	Y FM	W3-R33A,B		
2	GND	W3-R34A,B		
3	Y R/P CH1 RF	W3-R7A,B		
4	GND	W3-R9A,B		
5	GND	W3-R9A,B		
6	Y R/P CH2 RF	W3-R8A,B		
7	C FM	W3-R36A,B		
8	GND	W3-R35A,B		
9	C R/P CH1 RF	W3-R13A,B		
10	GND	W3-R15A,B		
11	GND	W3-R15A,B		
12	C R/P CH2 RF	W3-R14A,B		

VJP1233T (PCM ONLY)

CN300		FROM / TO		
1	Y CH1 PCM GATE	W6-R23A		
2	Y CH2 PCM GATE	W6-R24A		
3	GND	W6-R29A		
4	C CH1 PCM GATE	W6-R23B		
5	C CH2 PCM GATE	W6-R24B		
6	GND	W6-R29A		

POWER BOX

VJP1709

POWER1		FROM / TO		
1	+14.5V			
2	+11.5V			
3	+5V			
4	+5V			
5	GND			
6	GND			

VJP1627

POWER2		FROM / TO		
1	GND			
2	GND			
3	+7.5V			
4	-7.5V			
5	-11.5V			
6	-14.5V			
7	UNREG GND			
8	+24V			

+5V C1 16V220 C2 16V220

REVERSE SIDE W, MOTHER SCHEMATIC DIAGRAM

WO(W,MOTHER) SCHEMATIC DIAGRAM 4/4

B MOTHWER

VJP1232T

CN21		FROM / TO			
1	(TCR EXT)	W6-F8B			AU-65H AU-665/665/662/760 ONLY
2	(TC GND)	W6-F9A			
3	TCR PB	W6-F8A			
4	TCG/TCR	W6-F9B			
5	TC GND	W6-F9A			
6	TC EE	W6-F13B			

VJP1932T

CN30		FROM / TO			
1	CAP MAIN CLK	W5-R8A			
2	GND	W5-R1A,B	CN31-4	CN30-4	
3	CAP DSC	W5-R9B			
4	GND	W5-R1A,B	CN31-4	CN30-2	
5	+7.5V	W5-R2A,B			
6	-7.5V	W5-R3A,B			
7	TR FG 1	W5-R14A			
8	(GND)	W5-R24A,B			
9	(REC VITC)	W5-R25A,B			
10	(VICE)	W5-R26A,B			
11	(GND)	W3-R27A,B	W4-R33A	W4-R20A	CN320-4
12	(COMP SYNC)	W1-R14B	W4-R27A	W3-R20A,B	CN320-3
13	(VP REC)	W4-R37A			AU-65H AU-65/665 AU-662/760 ONLY
14	GND	W3-F9A,B	CN500-2		
15	Y PB 2	W3-F8A,B			

VJP1234T (AU-665/662/63 ONLY)

CN34		FROM / TO		
1	STILL POS F	W5-R35B		
2	STILL POS R	W5-R36B		
3	AT AR	W5-R37B		
4	AT ON	W5-R39B		
5	NORMAL	W5-R40B		
6	AT EJECT	W5-R41B		

VJP1932T

CN41		FROM / TO		
1	R SYNC	W2-R14B	W1-R23B	
2	R VP	W1-R22A		
3	GND			
4	Y PB SYNC	W1-F15B	W2-F18A	W5-F49A
5	TAPE V	W1-F15A		
6	GND	W1-F14B		
7	TC CF	W1-F16A		
8	R HD	W1-R24B	CN602-2A	
9	GND	W1-R19B	W1-R25A,B	
10	CHARACTOR	W2-R16A		
11	CHARACTOR GATE	W2-R15B		
12	GND	W2-R176,B	W2-R16B	
13	(DUB CF)	W1-R17B	CN47-3	
14	(REF VIDEO)	W1-R45B	CN36-11	AU-665/662/760 ONLY
15	(GND)	W1-R44B	CN36-12	

VJP1230T

CN600		FROM / TO		
1	T REEL PULSE 1	W5-R13B		
2	S REEL PULSE 1	W5-R13A		
3	CAP OVERRIDE	W5-R28A		

VJP2893A064

CN20				A	NO	B				
FROM / TO							FROM / TO			
W1-R21A	CN602-3A			R FRAMING	1	AUTO OFF LED	CN46-6			
W1-R35A				ADV 1	2	FAN TRBL	CN22-5			
W1-F11B				SEARCH	3	AT MODE	W1-F8A			
W1-R34B				TAPE R/P	4	ADV 2	W1-R34A			
W1-F19A				EJECT TAPE	5	INT	W1-R32A			
W1-R33A				EXT	6	ADV CONT	W1-F20B			
W1-R30A				CF SELECT 2	7	CF SELECT 3	W1-R30B			
W1-R26B				TAPE WIDE /(DUB CF ON)	8	CF SELECT 1	W1-R31A			
W1-F18A	W2-F15A	W3-F14A,B		C OFF	9	FAN ON	W1-R10B			
W1-F27B				REF SCH	10	V PHASE 1	W1-R29A	W2-R18A		
W1-R32B	W4-R3BA			FREEZE /(DUB)	11	REF DET	W1-R27A			
W1-R28B	W4-R35B			SYO	12	LINE	W1-R31B	W4-F21A,B	CN37-2	
W2-F14A				V PHASE CF	13	PHASE INH	W2-F13A			
W3-F38A,B	W4-R4DB			EE WIDE /(PCM DET)	14	ID OFF	W2-R15A	CN602-1B		
W3-F12A,B	W2-F12B			AT SPEED	15	LOW RF	W3-F22A,B			
W3-R29A,B	W1-F10B	W4-R38B	W6-F32A	VIDEO IN /FM MUT	16	VISC ON	W4-F20A,B			
W4-R34B				A-SYO AUTO	17	I2C	W4-F22A,B	CN37-1		
W4-R34A				IN SCH	18	CPNT CFON /HI SPEED ATT 2	W4-R35A	W6-R13A		
W6-R12A	CN37-4			DUB IN /HI SPEED ATT 1	19	SERVO LOCK	W2-F14B			
W3-F13A,B	W2-F13B			TAPE FWD	20	EJECT LED	CN46-7			
				-14.5V	21	TR FG 2	W5-R14B			
W5-R17B				-11.5V	22	PINP /LONDING MUT	W5-R13B	CN321-1		
W5-R12A				CAP FWD	23	TC DETECT	W6-F6B			
W5-R10A				SERIAL DATA TIM	24	RE START	W5-R19A	CN31-8		
W5-R11A				SERIAL DATA REL	25	SERIAL DATA FRT	CN46-3			
W5-R9A				SERIAL DATA DRM	26	SERIAL DATA AUD/FM ATT	W6-F4BB			
W5-R10B	W6-F49A	CN46-5		SERIAL DATA CAP	27	AERIAL DATA SRV	W5-R12B			
W5-R16B				STRB CLK 16	28	STRB CLK 8	W5-R11B			
W5-R7A				FRAMING /4	29	SERIAL CLK	W5-R9B	W6-F4BA	CN46-4	
W5-R18B				S FRAMING	30	FRAMING /2	W5-R16A			
W6-F6A				CTL PULSE	31	R/P HEAD	W5-R42B	W1-R33B	W3-F25A,B	
				TCG/TCR ON	32	PINCH ON	W5-R38B			

DIGITAL INTERFACE

(AU-665/760 OPTION)

CN601

FROM / TO				A	NO	B	FROM / TO			
W1-S08				GND	1	PB 1	W1-F49A			
W1-F49B				PB 2	2	PB 3	W1-F48A			
W1-F48B				PB 4	3	PB 5	W1-F47A			
W1-F47B				PB 6	4	PB 7	W1-F46A			
W1-F46B				PB 8	5	PR 1	W1-F44A			
W1-F44B				PR 2	6	PR 3	W1-F43A			
W1-F43B				PR 4	7	PR 5	W1-F42A			
W1-F42B				PR 6	8	PR 7	W1-F41A			
W1-F41B				PR 8	9	GND	W1-F40A,B			
W1-F39B				Y 1	10	Y 2	W1-F38A			
W1-F38B				Y 3	11	Y 4	W1-F37A			
W1-F37B				Y 5	12	Y 6	W1-F36A			
W1-F36B				Y 7	13	Y 8	W1-F35A			

CN602

FROM / TO				A	NO	B	FROM / TO			
W1-F18A	W2-F15A	W3-F14A,B	CN20-9A	C OFF	1	ID OFF	W2-R15A	CN20-14B		
W1-R24B	CN41-8			R HD	2	Y RCLK	W1-F39A			
W1-R21A	CN20-1A			R FRAMING	3	+7.5V	POWER2-4			
				+5V	4	←	POWER1-3,4			
				GND	5	←	POWER1-5,6			
W1-R16B	W2-R12B	W5-R15A		REF CF	6	+11.5V	POWER1-2			
					7					

MODEL / TYPE	AU-65H	AU-63H	AU-62H
NTSC	VEP88091A	VEP88091A	VEP88091A
PAL	VEP88091C	VEP88091C	VEP88091C

W1(TBC & SYNC GEN) SCHEMATIC DIAGRAM 1/6

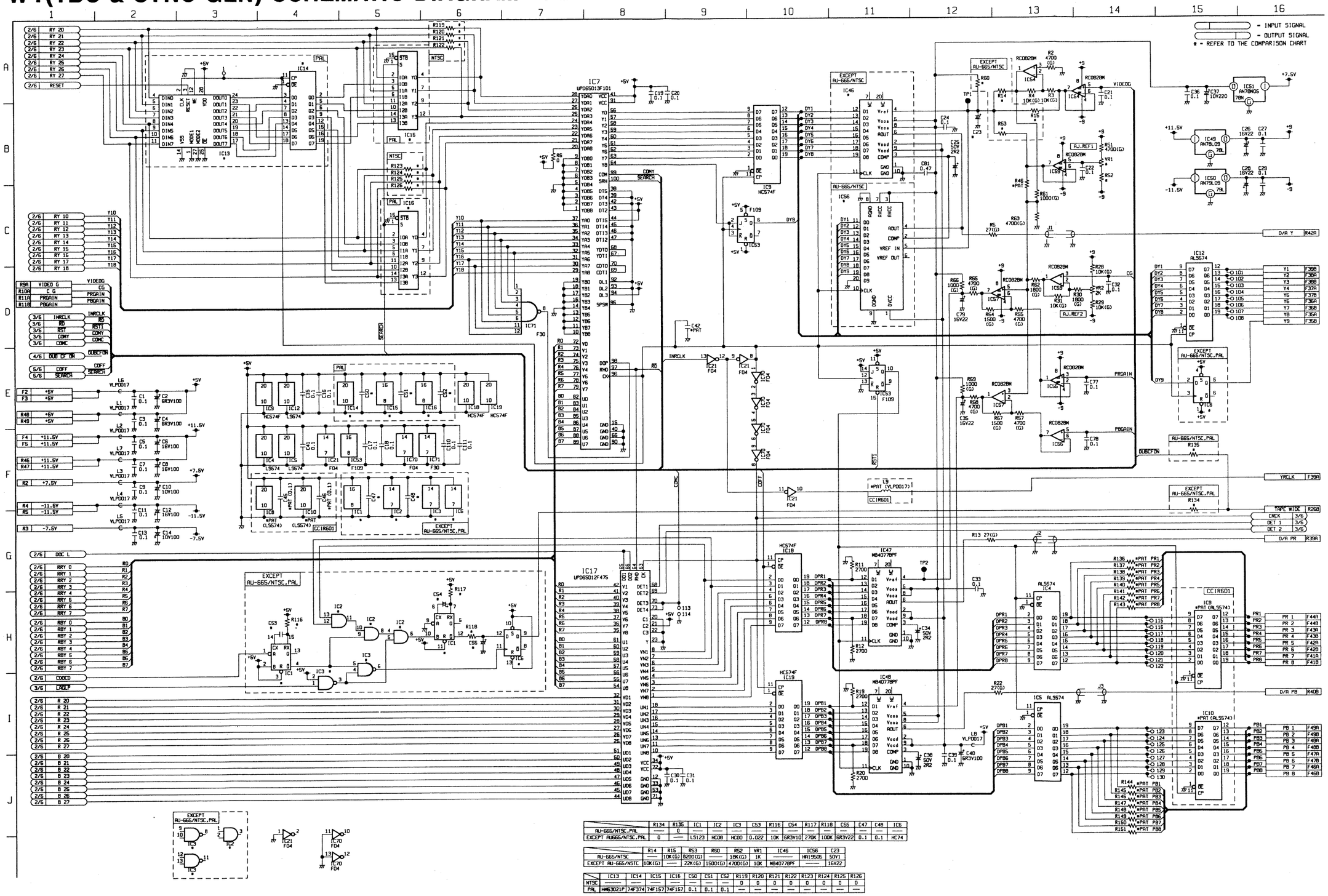

	R134	R135	IC1	IC2	IC3	CS3	R116	CS4	R117	R118	CS5	C47	C48	IC6
AU-66S/NTSC,PAL	——	0	——	——	——	——	——	——	——	——	——	——	——	——
EXCEPT AU66S/NTSC,PAL	0	——	LS123	HC08	HC00	0.022	10K	6R3V10	270K	100K	6R3V22	0.1	0.1	HC74

	R14	R15	R53	R60	R52	VR1	IC46	IC56	C23
AU-66S/NTSC	——	10K(G)	B200(G)	——	18K(G)	1K	——	HA19505	50V1
EXCEPT AU-66S/NTSC	10K(G)	——	22K(G)	1500(G)	4700(G)	10K	M64078FP	——	16V22

	IC13	IC14	IC15	IC16	C50	C51	C52	R119	R120	R121	R122	R123	R124	R125	R126
NTSC	——	——	——	——	——	——	——	0	0	0	0	0	0	0	0
PAL	HM63021P	74F374	74F157	74F157	0.1	0.1	0.1	——	——	——	——	——	——	——	——

W1(TBC & SYNC GEN) SCHEMATIC DIAGRAM 2/6

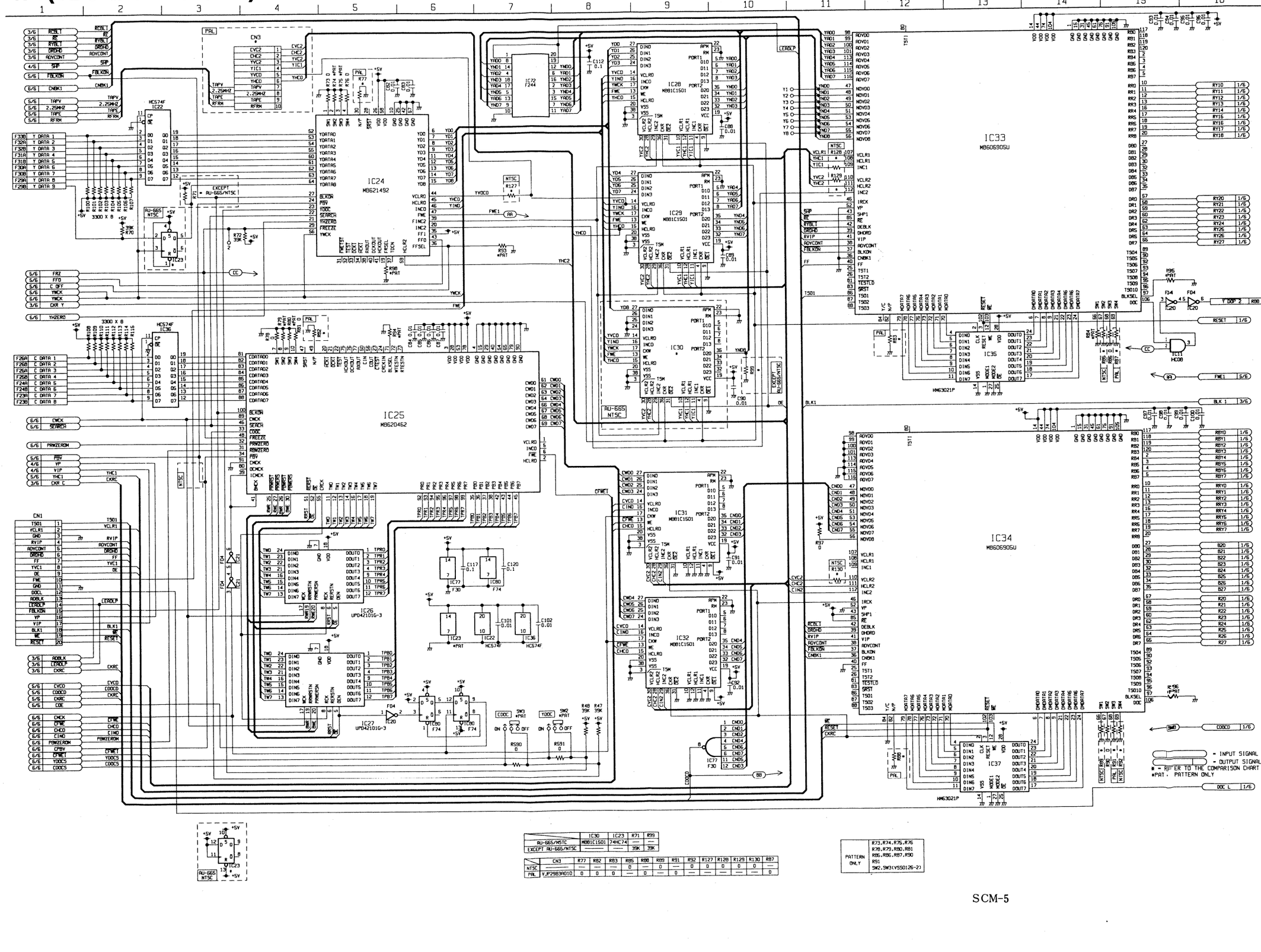

	IC30	IC23	R71	R99
RU-665/NTSC	MB81C1501	74HC74	—	—
EXCEPT RU-665/NTSC	——	——	39K	39K

	CN3	R77	R82	R83	R85	R88	R89	R91	R92	R127	R120	R123	R130	R87
NTSC	——	—	—	—	0	—	0	—	0	0	0	—	—	—
PAL	V_P29B3A010	0	0	0	—	0	—	0	—	—	—	—	—	0

PATTERN ONLY
R73,R74,R75,R76 R78,R79,R80,R81 R86,R86,R87,R90 R91 SW2,SW3(VS50126-2)

TYPE \ MODEL	AU-65H	AU-63H	AU-62H
NTSC	VEP88091A	VEP88091A	VEP88091A
PAL	VEP88091C	VEP88091C	VEP88091C

W1(TBC & SYNC GEN) SCHEMATIC DIAGRAM 3/6

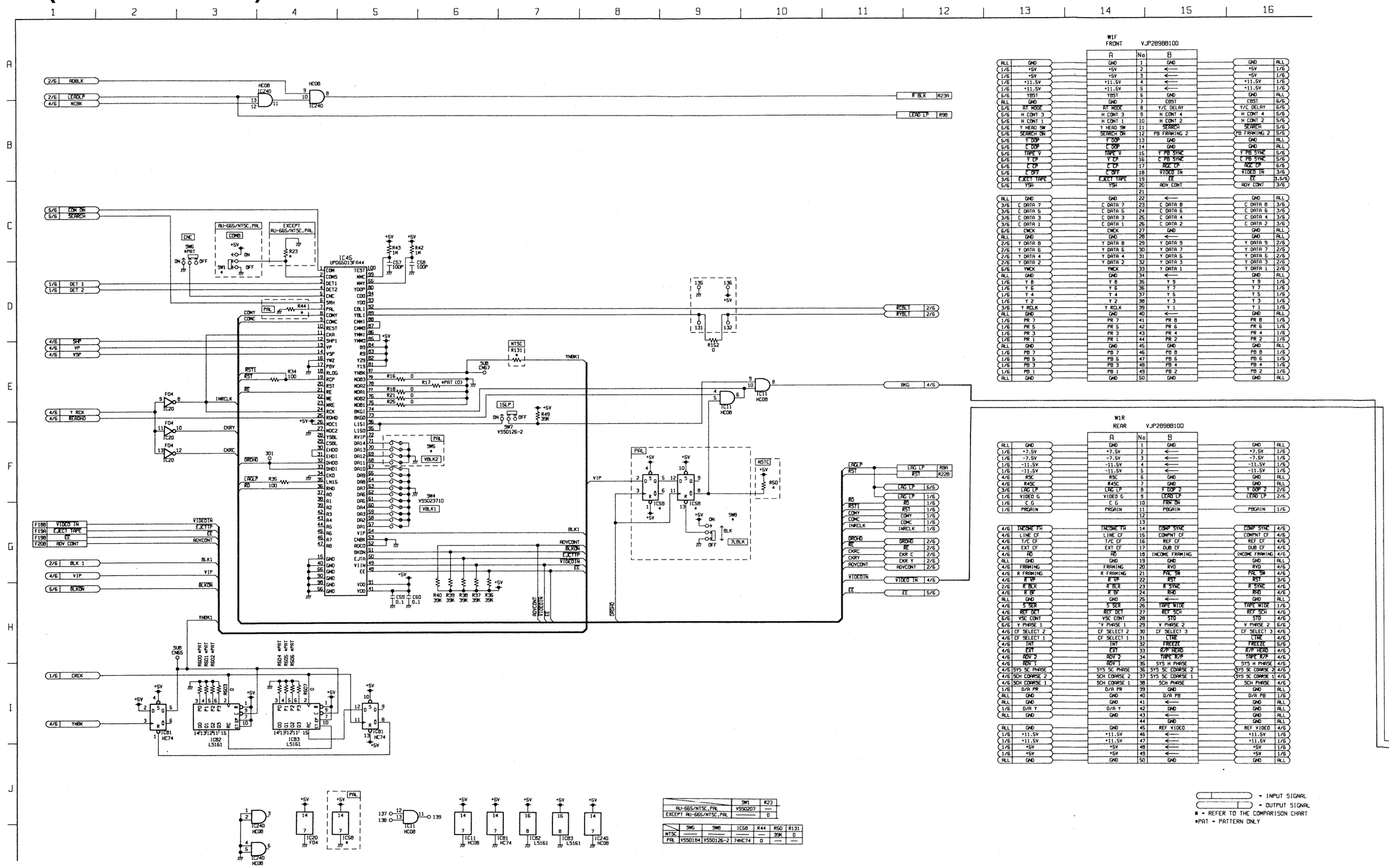

	SW1	R23
AU-66S/NTSC,PAL	VSS0207	—
EXCEPT AU-66S/NTSC,PAL	—	0

	SW5	SW6	IC58	R44	R50	R131
NTSC	—	—	—	—	39K	0
PAL	VSS0184	VSS0126-2	74HC74	0	—	—

REVERSE SIDE **TBC & SYNC GEN SCHEMATIC DIAGRAM**

W1(TBC & SYNC GEN) SCHEMATIC DIAGRAM 4/6

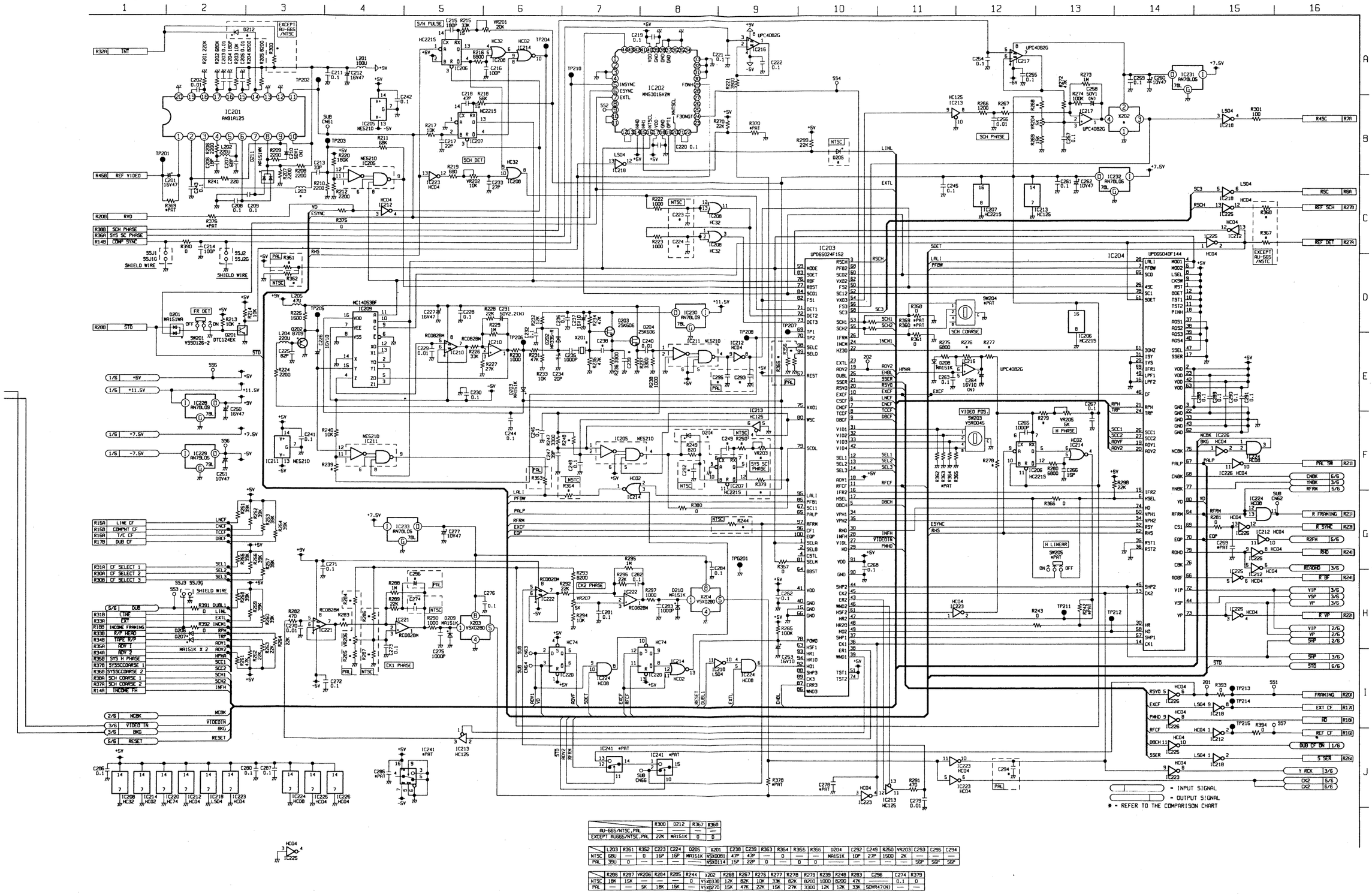

	R300	D212	R367	R368
AU-G6S/NTSC,PAL	—	—	—	—
EXCEPT AU6GS/NTSC,PAL	22K	MA151K	0	0

	L203	R351	R352	C223	C224	D205	X201	C238	C239	R353	R354	R355	R356	D204	C252	C249	R250	VR203	C293	C295	C294
NTSC	68U	—	0	15P	15P	MA151K	VSX0081	47P	47P	—	0	—	—	MA151K	10P	27P	150Ω	2K	—	—	—
PAL	39U	0	—	—	—	—	VSX0114	15P	22P	0	—	0	0	—	—	—	—	—	56P	56P	56P

	R286	R287	VR206	R284	R285	R244	X202	R268	R267	R276	R277	R278	R279	R239	R248	R283	C296	C274	R379
NTSC	10K	15K	—	—	—	0	VSX0138	12K	82K	10K	33K	82K	8200	1000	8200	47K	———	0.1	0
PAL	—	—	5K	18K	15K	—	VSX0270	15K	47K	22K	15K	27K	3300	12K	12K	33K	SDVR47(N)	—	—

TYPE \ MODEL	AU-65H	AU-63H	AU-62H
NTSC	VEP88091A	VEP88091A	VEP88091A
PAL	VEP88091C	VEP88091C	VEP88091C

W1(TBC & SYNC GEN) SCHEMATIC DIAGRAM 5/6

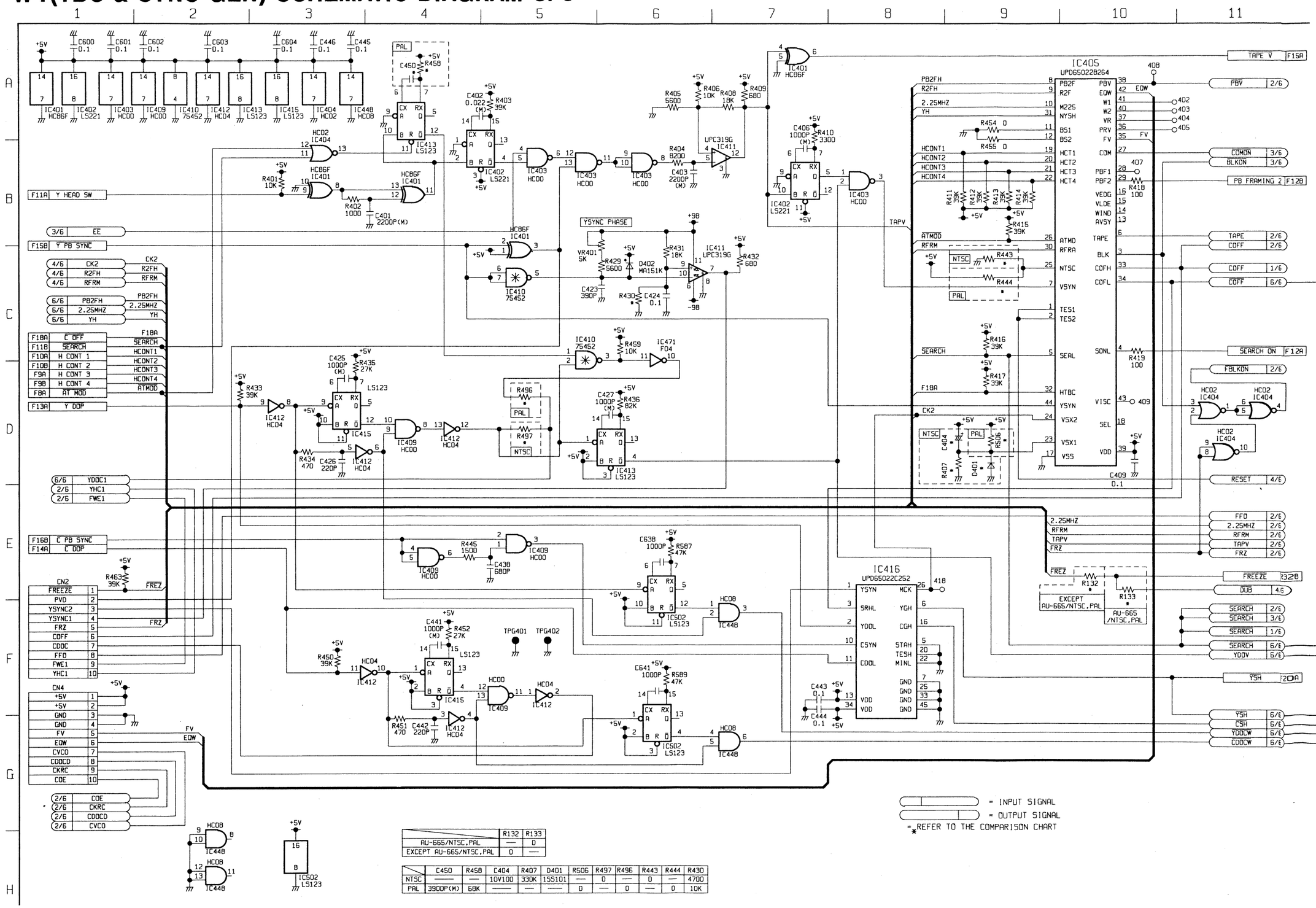

	R132	R133
AU-665/NTSC,PAL	—	0
EXCEPT AU-665/NTSC,PAL	0	—

	C450	R458	C404	R407	D401	R506	R497	R496	R443	R444	R430
NTSC	——	——	10V100	330K	1SS101	——	0	——	0	——	470Ω
PAL	3900P(M)	68K	——	——	——	0	——	0	——	0	10K

W1(TBC & SYNC GEN) SCHEMATIC DIAGRAM 6/6

1 2 3 4 5 6 7 8 9 10 11 12 13 14 15 16

- INPUT SIGNAL
- OUTPUT SIGNAL
* = REFER TO THE COMPARISON CHART

	R438	R500	IC473	R478	C103
NTSC	—	—	74HC164F	1200	—
PAL	0	0	——	5600	180P

ENCODER SCHEMATIC DIAGRAM

TYPE \ MODEL	AU-65H	AU-63H	AU-62H
NTSC	VEP88063P	VEP88063G	VEP88063G
PAL	VEP88063M	VEP88063N	VEP88063Q

W2 (ENCODER) SCHEMATIC DIAGRAM 1/4 (FOR NTSC)

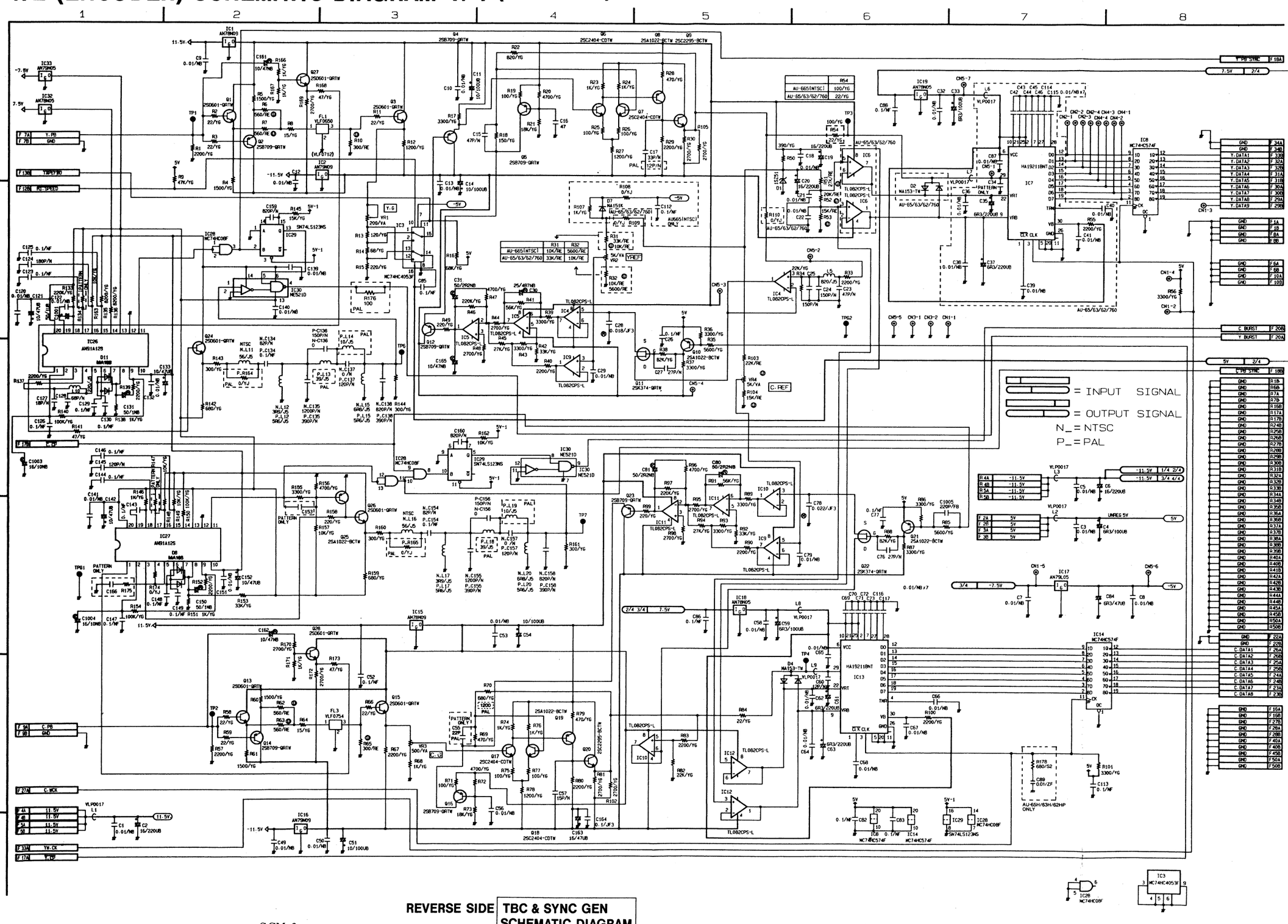

REVERSE SIDE **TBC & SYNC GEN SCHEMATIC DIAGRAM**

W2 (ENCODER) SCHEMATIC DIAGRAM 2/4 (FOR NTSC)

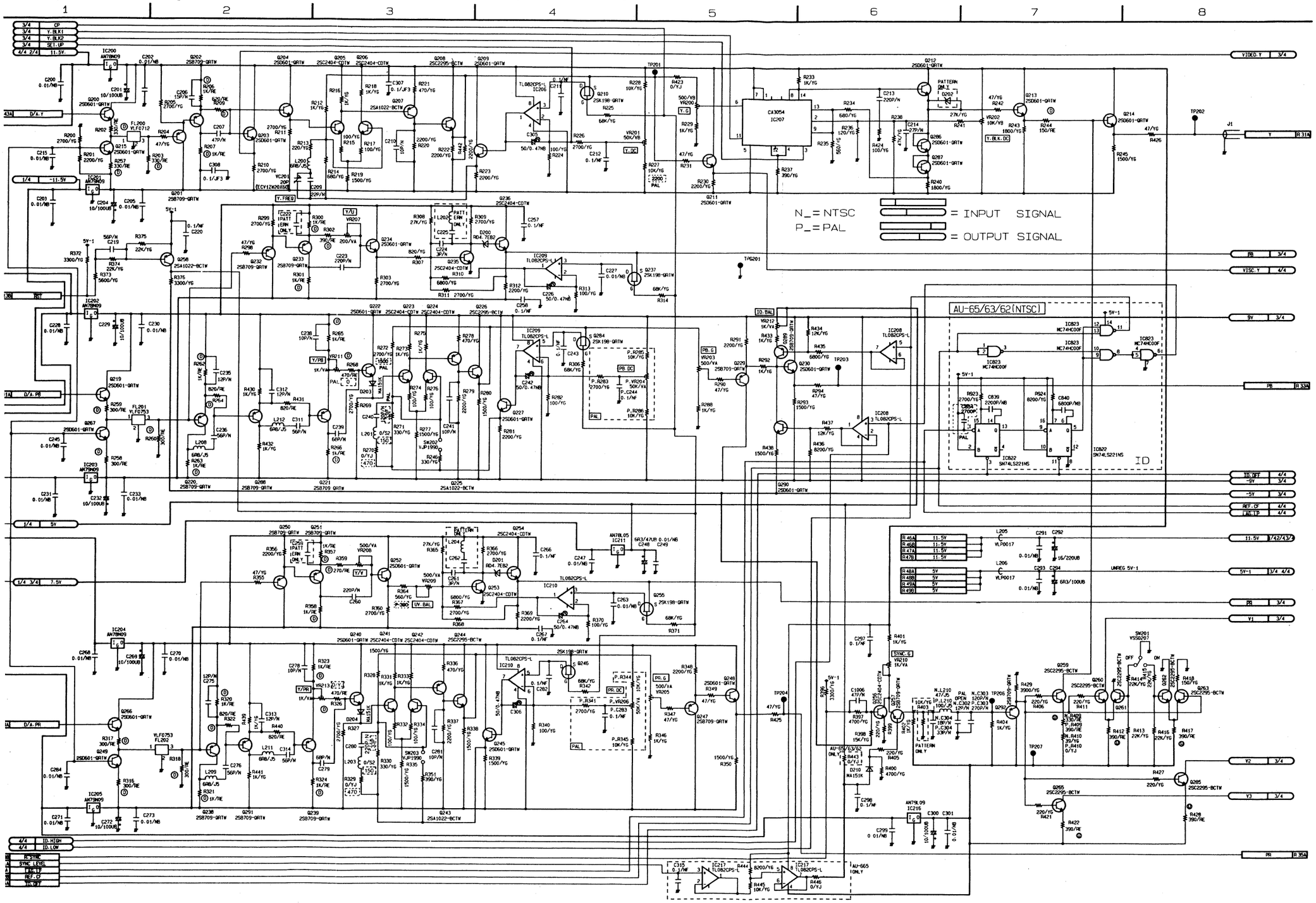

TYPE \ MODEL	AU-65H	AU-63H	AU-62H
NTSC	VEP88063P	VEP88063G	VEP88063G
PAL	VEP88063C	VEP88063D	VEP88063C

W2 (ENCODER) SCHEMATIC DIAGRAM 3/4 (FOR NTSC)

= INPUT SIGNAL

= OUTPUT SIGNAL

N_= NTSC

P_= PAL

SCM-9

W2(ENCODER) SCHEMATIC DIAGRAM 4/4(FOR AU-65H PAL)

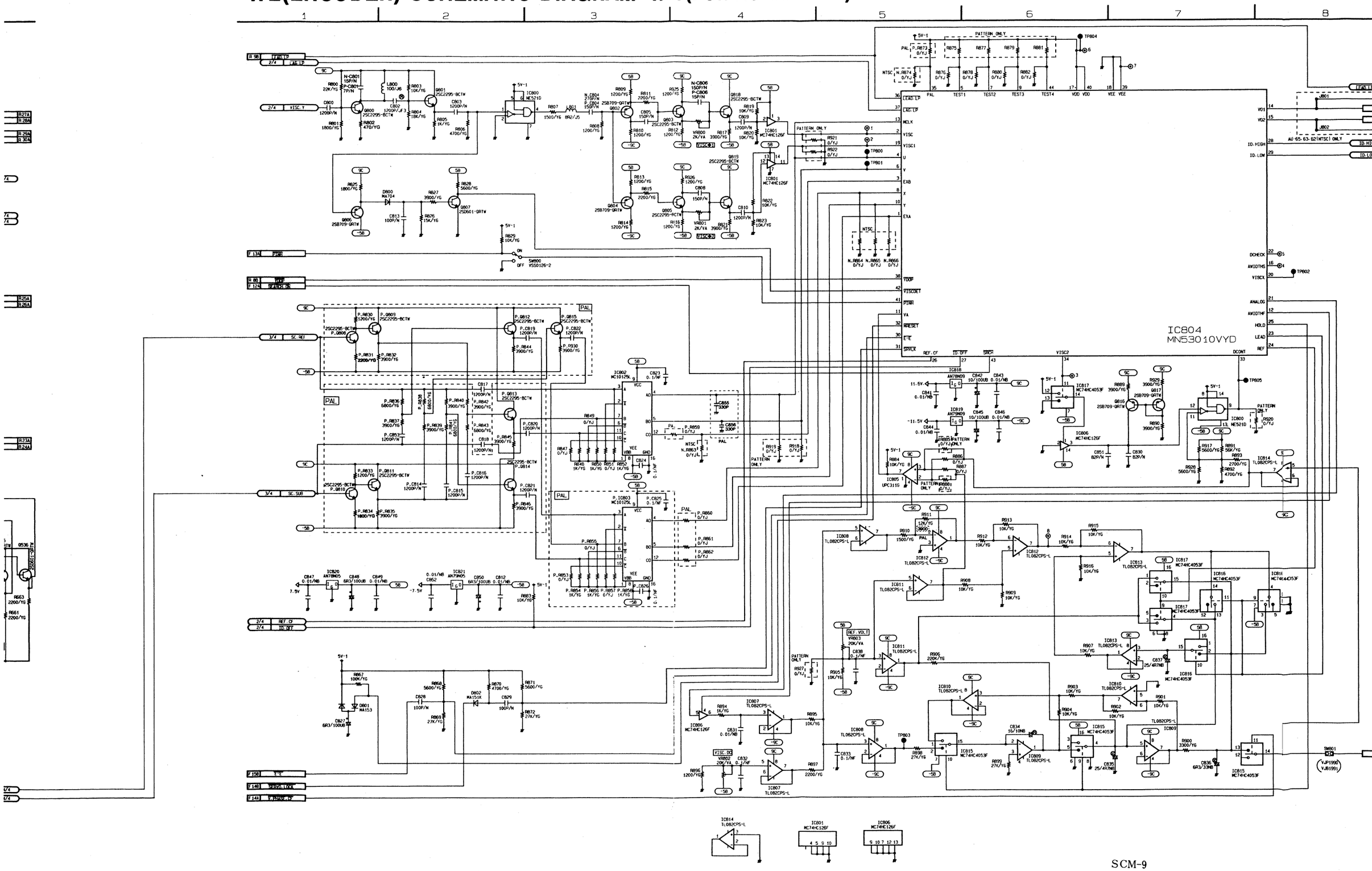

DECODER
SCHEMATIC DIAGRAM

TYPE \ MODEL	AU-65H	AU-63H	AU-62H
NTSC	VEP83172A	Not Used	Not Used
PAL	SCM-12,13	Not Used	Not Used

W4(DECODER) SCHEMATIC DIAGRAM 1/4(FOR AU-65H NTSC)

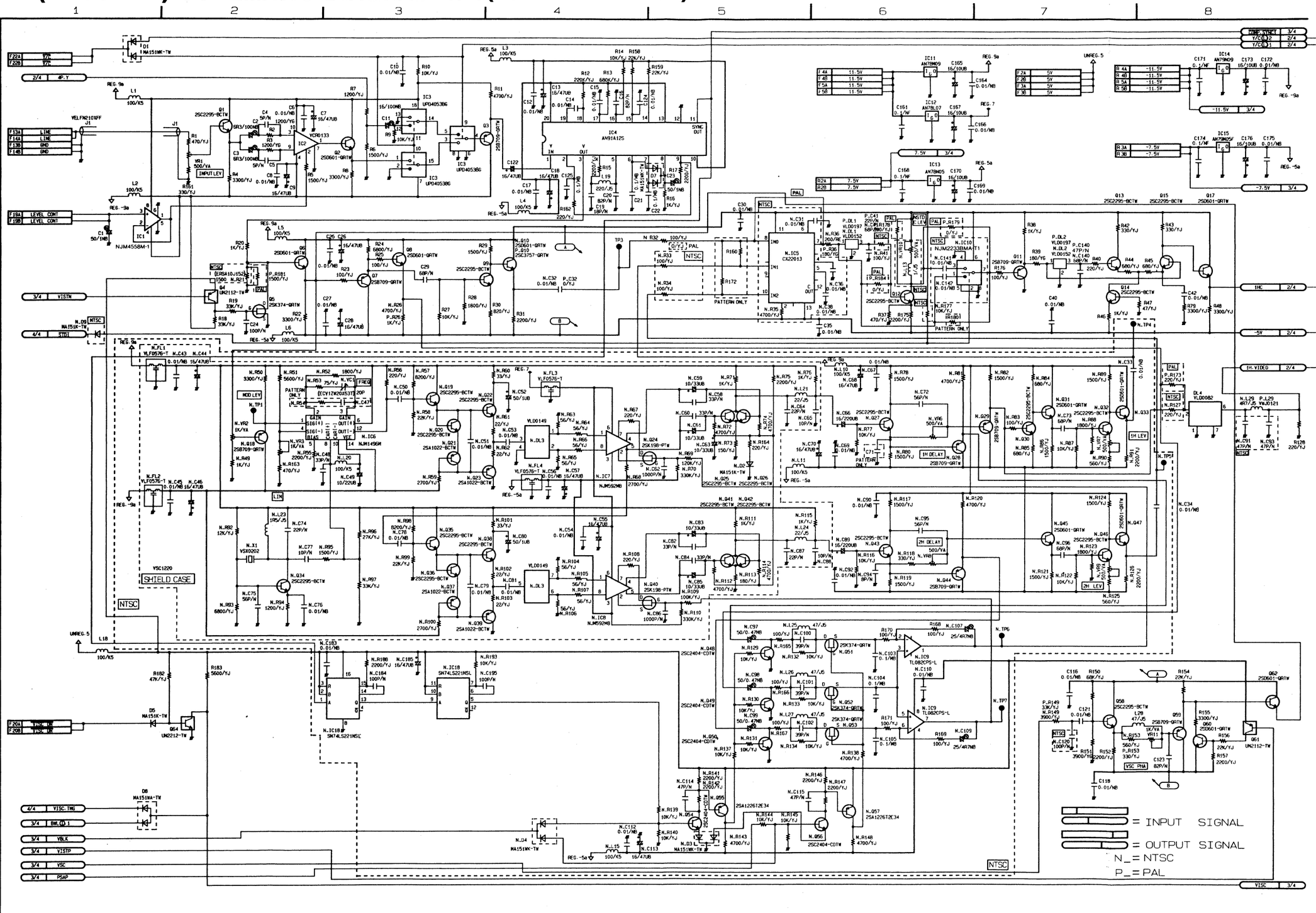

REVERSE SIDE **ENCODER SCHEMATIC DIAGRAM**

W4(DECODER) SCHEMATIC DIAGRAM 2/4(FOR AU-65H NTSC)

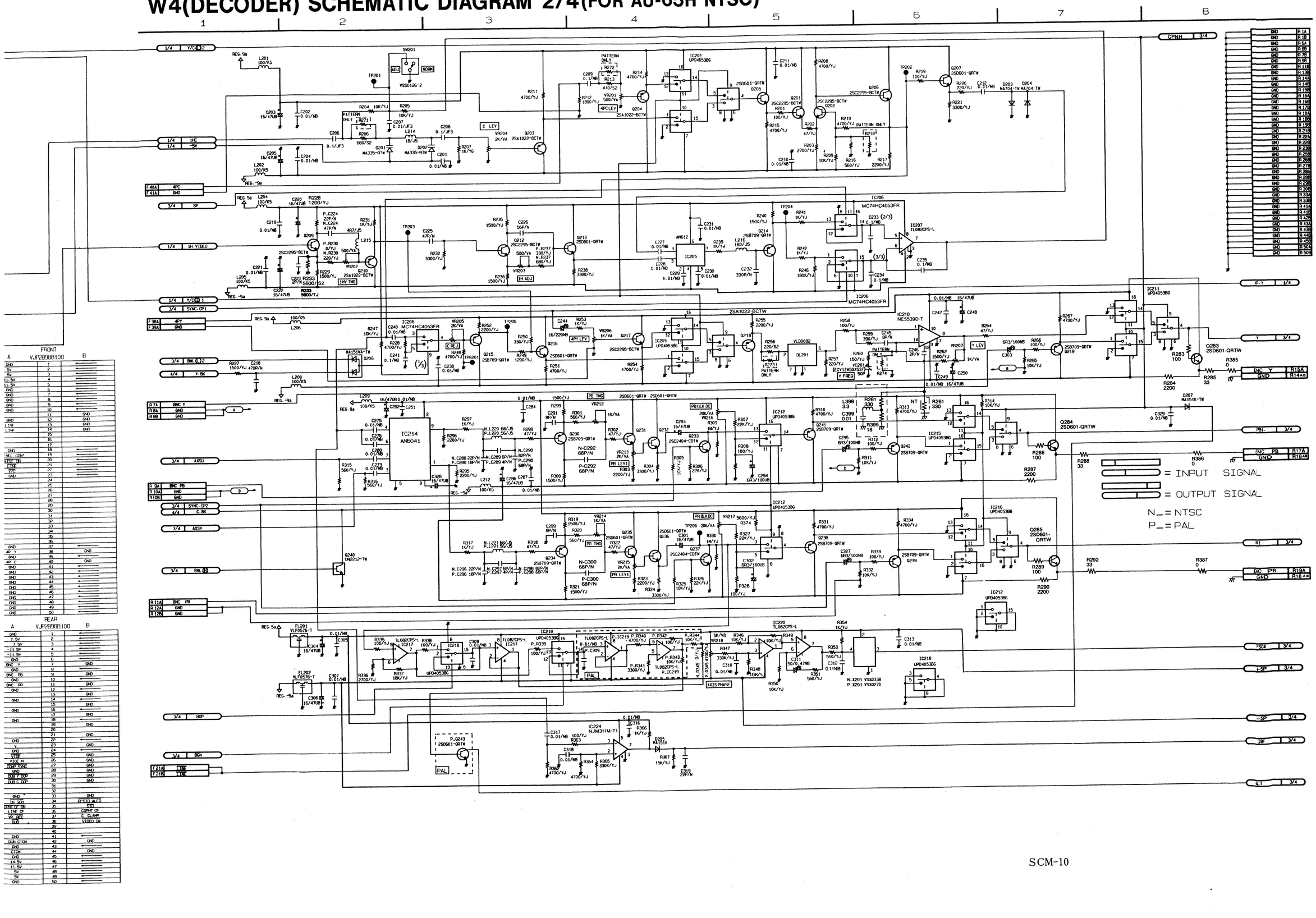

MODEL / TYPE	AU-65H	AU-63H	AU-62H
NTSC	VEP83172A	Not Used	Not Used
PAL	SCM-12,13	Not Used	Not Used

W4(DECODER) SCHEMATIC DIAGRAM 3/4(FOR AU-65H NTSC)

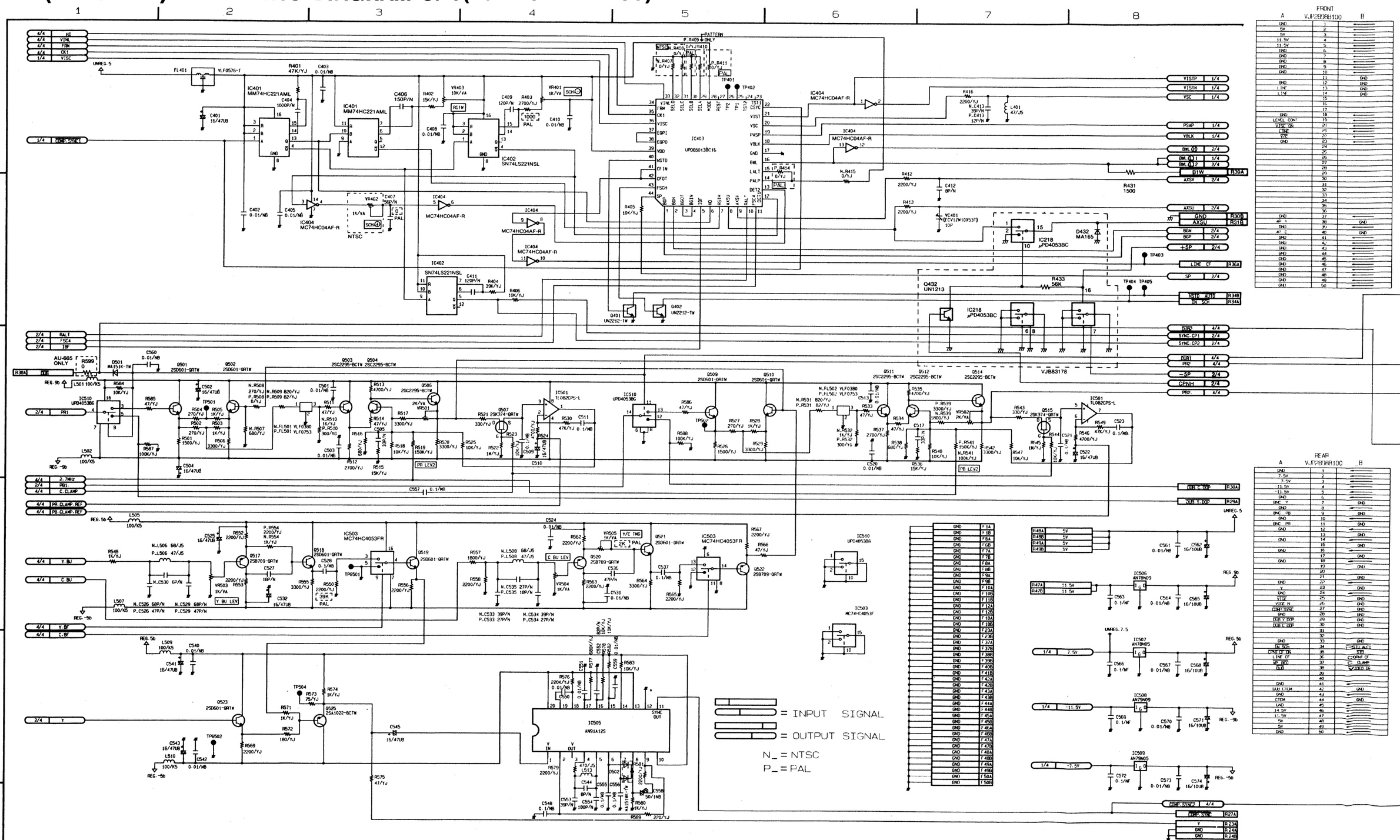

W4(DECODER) SCHEMATIC DIAGRAM 4/4(FOR AU-65H NTSC)

N_ = NTSC
P_ = PAL

= INPUT SIGNAL

= OUTPUT SIGNAL

IC713
UPD65013FC25

DECODER SCHEMATIC DIAGRAM

TYPE \ MODEL	AU-65H	AU-63H	AU-62H
NTSC	SCM-10·11	Not Used	Not Used
PAL	VEP83173A	Not Used	Not Used

W4(DECODER) SCHEMATIC DIAGRAM 1/4(FOR AU-65H PAL)

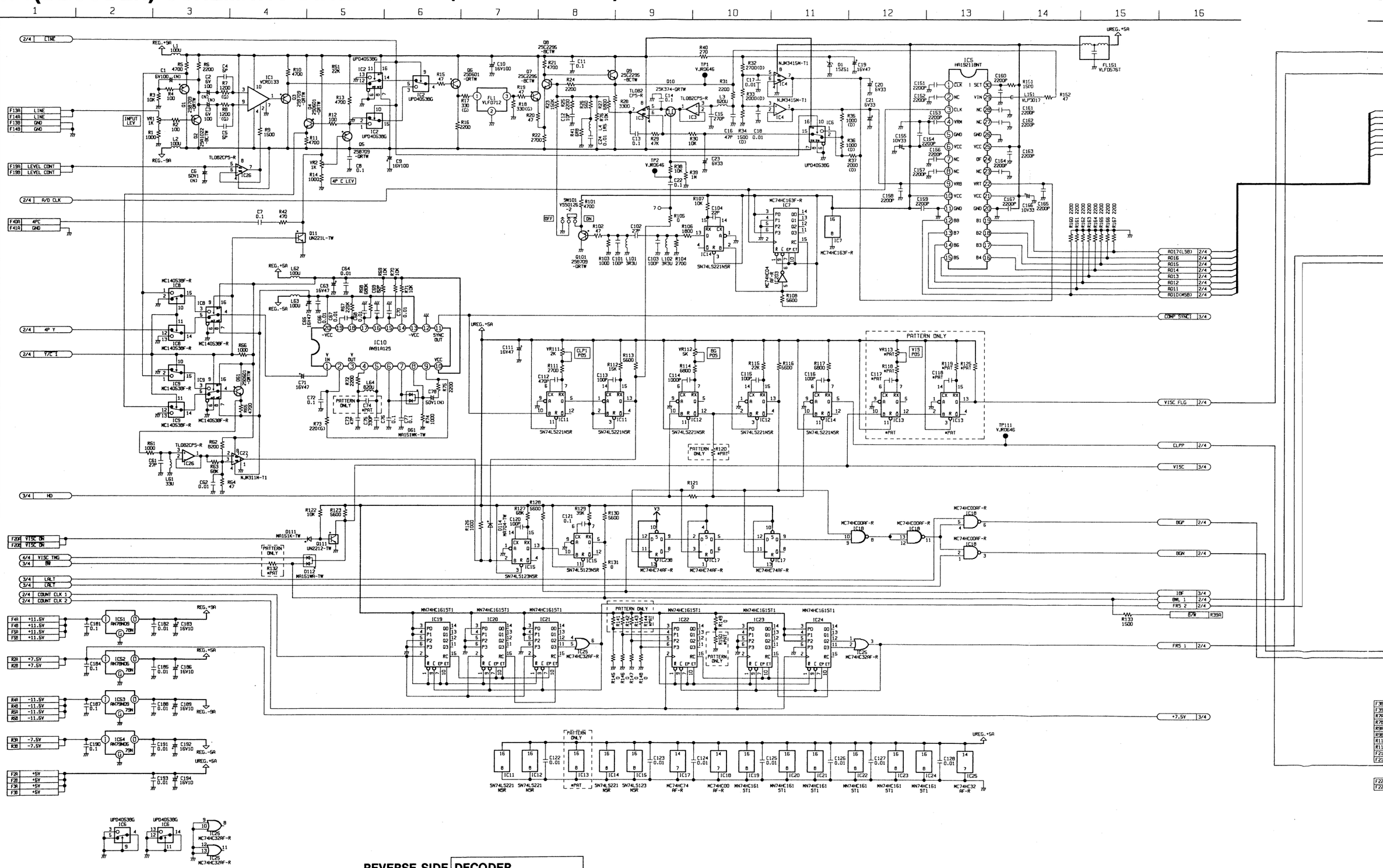

REVERSE SIDE **DECODER SCHEMATIC DIAGRAM**

W4(DECODER) SCHEMATIC DIAGRAM 2/4(FOR AU-65H PAL)

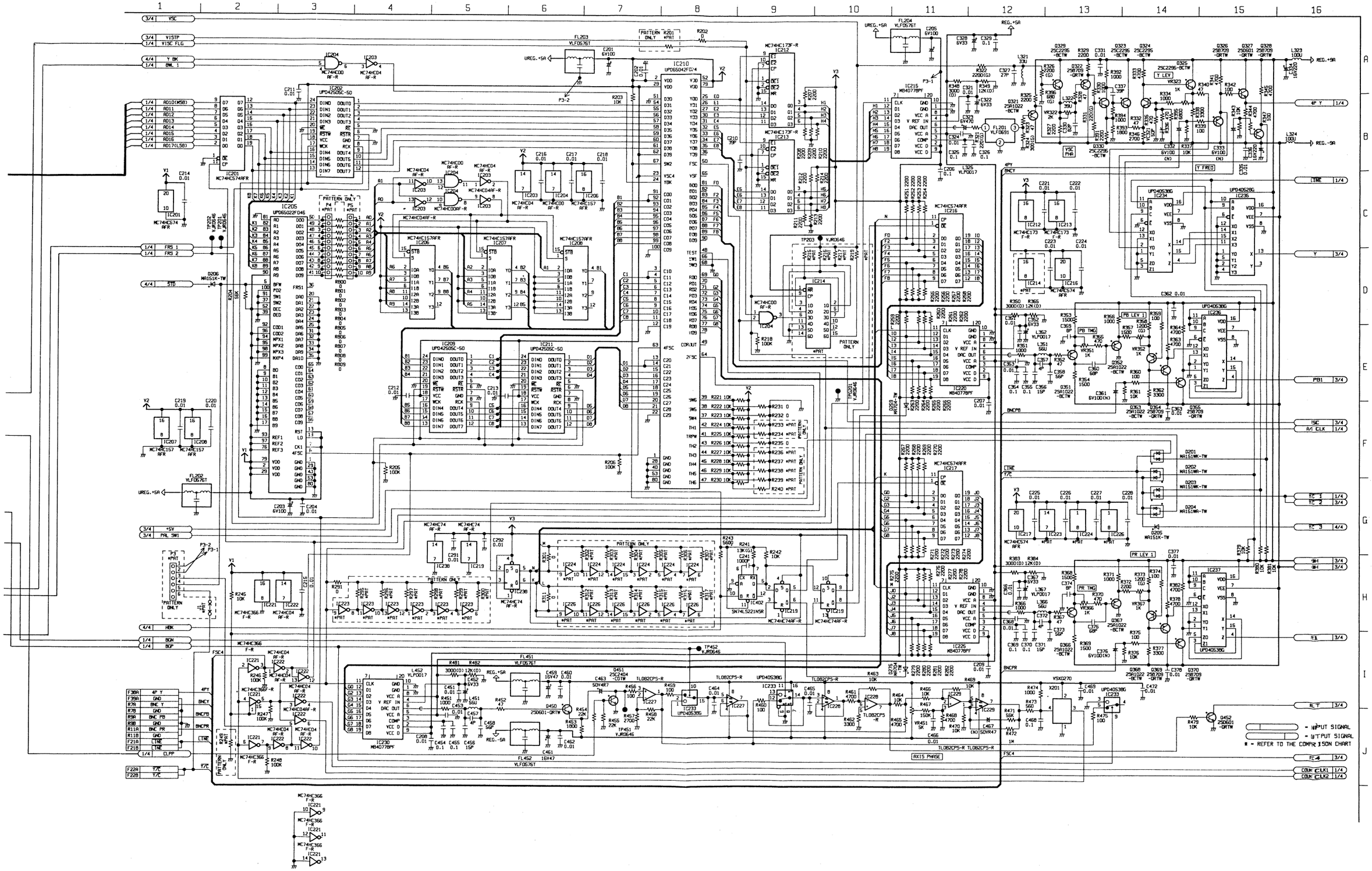
3/4 VSC
3/4 V15TP
1/4 VISC FLG
4/4 Y BK
1/4 BWL 1
1/4 AD10(MSB)
1/4 AD11
1/4 AD12
1/4 AD13
1/4 AD14
1/4 AD15
1/4 AD16
1/4 AD17(LSB)
1/4 FRS 1
1/4 FRS 2
4/4 STB
3/4 +5V
3/4 PAL SW1
4/4 HBK
1/4 BGN
1/4 BGP
1/4 CLPP
F38A 4P Y
F39A GND
R7A BNC Y
R7B GND
R8A BNC PB
R8B GND
R11A BNC PR
R11B GND
F21A LINE
F21B LINE
F22A Y/C
F22B Y/C
4PY
BNCY
BNCPB
BNCPR
LINE
Y/C
IC201 MC74HC574AFR
IC202 UPD42505C-SD
IC203 MC74HC04 AF-R
IC204 MC74HCD0 AF-R
IC205 UPD65022F046
IC206 MC74HC157AFR
IC207 MC74HC157 AFR
IC208 MC74HC157 AFR
IC209 UPD42505C-SD
IC210 UPD65042FD74
IC211 UPD42505C-SD
IC212 MC74HC173F-R
IC213 MC74HC173F-R
IC214 MC74HCD0 AF-R
IC215 MB40778PF
IC216 MC74HC574AFR
IC217 MC74HC574AFR
IC220 MB40778PF
IC225 MB40778PF
IC230 MB40778PF
IC233 UPD40S38G
IC234 UPD40S38G
IC235 UPD40S28G
IC236 UPD40S38G
IC237 UPD40S38G
IC238 MC74HC74 AF-R
IC239 MC74HC74AF-R
IC240 MC74HC74AF-R
IC401 5N74L5221NSR
IC402 5N74L5221NSR
FL201 VLF0691
FL202 VLF0576T
FL203 VLF0576T
FL204 VLF0576T
FL451 VLF0576T
FL452 VLF0576T
L451 VLP0017
L452 VLP0017
L321 33U
L322 2200(G)
L323 100U
L324 100U
L325 VLP0017
L326 2SC2295-BCTW
L327 2SC2295-BCTW
L328 6V33
L329 0.1
L330 2SC2295-BCTW
L331 2SC2295-BCTW
L332 2SC2295-BCTW
L333 6V100
L334 2SC2295-BCTW
L335 2SC2295-BCTW
L336 2SC2295-BCTW
L337 6V100
L338 2SC2295-BCTW
L339 2SC2295-BCTW
L340 2SC2295-BCTW
L341 2SC2295-BCTW
L342 2SC2295-BCTW
L343 2SC2295-BCTW
L344 2SC2295-BCTW
L345 2SC2295-BCTW
L346 2SC2295-BCTW
L347 2SC2295-BCTW
L348 2SC2295-BCTW
L349 2SC2295-BCTW
L350 2SC2295-BCTW
L351 56U
L352 VLP0017
L353 6V33
L354 6V100(N)
L355 6V100(N)
L356 6V100(N)
L357 6V100(N)
L358 6V100(N)
L359 6V100(N)
L360 6V100(N)
L361 6V100(N)
L362 6V100(N)
L363 6V100(N)
L364 6V100(N)
L365 6V100(N)
L366 6V33
L367 VLP0017
L368 6V100(N)
L369 6V100(N)
L370 6V100(N)
L371 6V100(N)
L372 6V100(N)
L373 6V100(N)
L374 6V100(N)
L375 6V100(N)
L376 6V100(N)
L377 6V100(N)
L378 6V100(N)
L379 6V100(N)
L380 6V100(N)
L381 6V100(N)
L382 6V100(N)
L383 6V100(N)
L384 6V100(N)
L385 6V100(N)
L386 6V100(N)
L387 6V100(N)

TYPE \ MODEL	AU-65H	AU-63H	AU-62H
NTSC	SCM-10-11	Not Used	Not Used
PAL	VEP83173A	Not Used	Not Used

W4(DECODER) SCHEMATIC DIAGRAM 3/4(FOR AU-65H PAL)

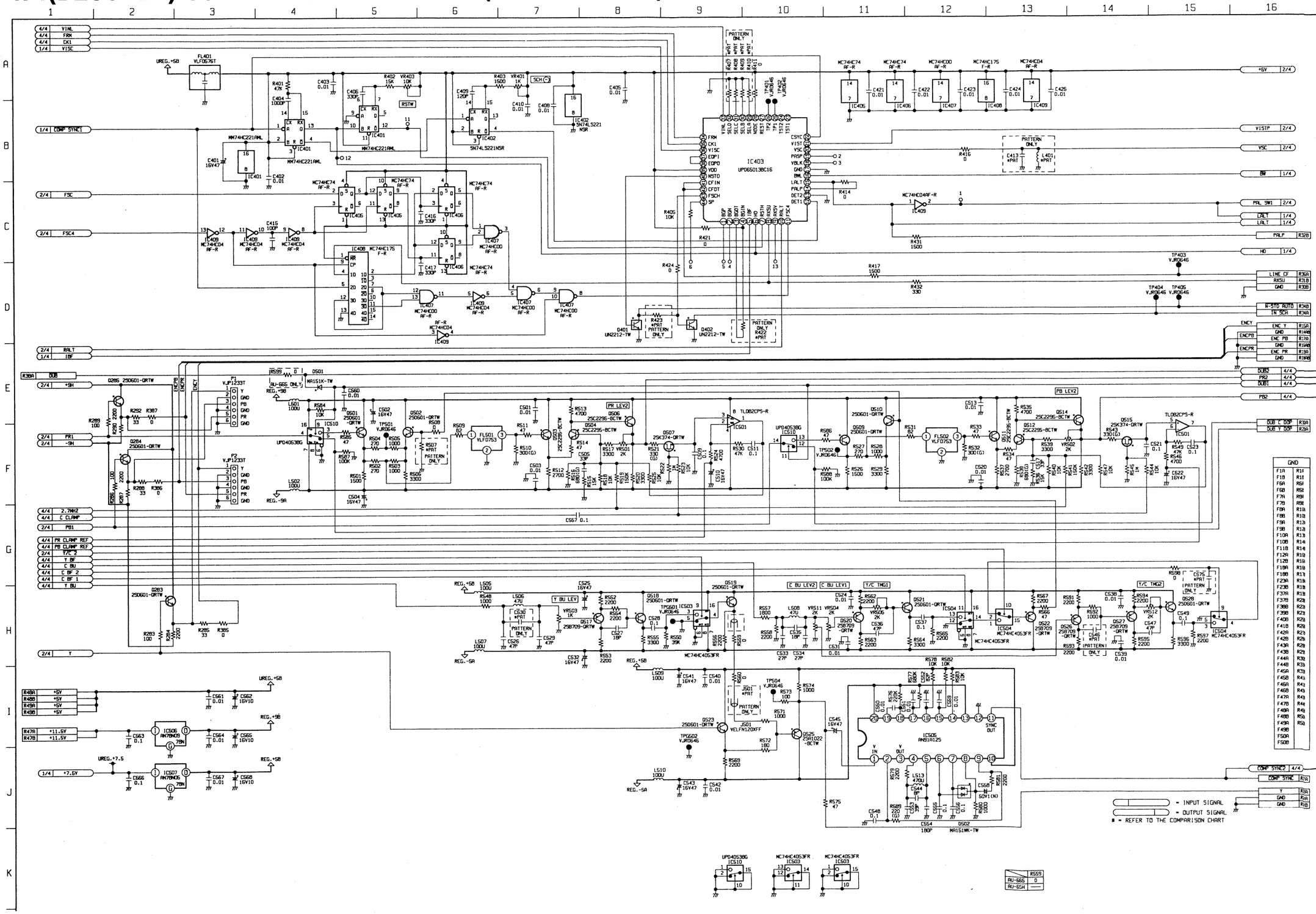

W4(DECODER) SCHEMATIC DIAGRAM 4/4(FOR AU-65H PAL)

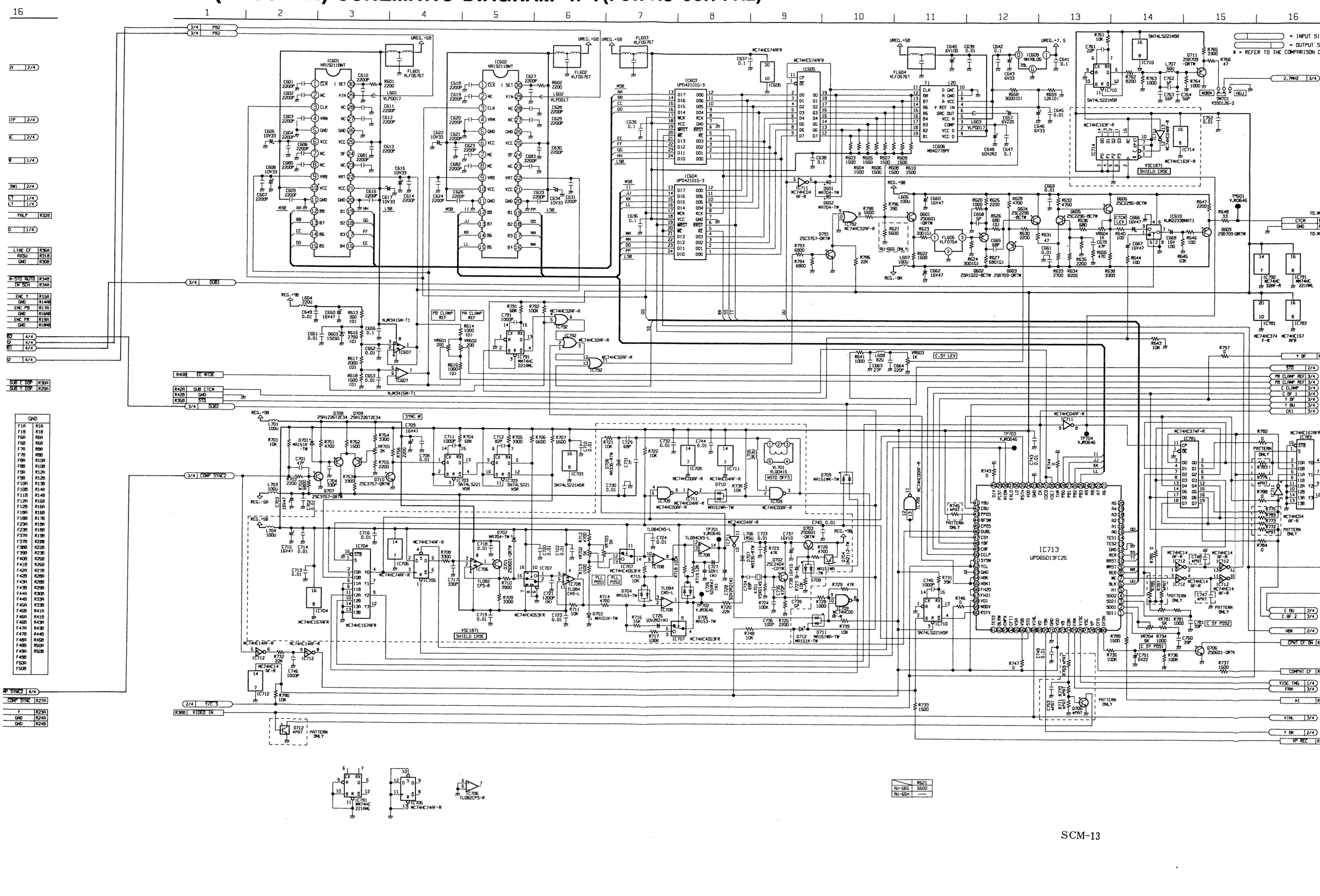
IC601 HA19211BNT
IC602 HA19211BNT
IC603 UPD42101G-3
IC604 UPD42101G-3
IC605 MC74HC574AFR
IC606 MB4077BPF
IC609 AN78L05
IC610 NJM2230BRAT1
IC611 MC74HC4066AF-R
IC612 MC74HC14AF-R
IC613 UPD6SD13FC25
IC701 NJM4558M-T1
IC703 SN74LS221NSR
IC704 MC74HC157AFR
IC705 MC74HC74AF-R
IC706 TL082CPS-R
IC707 MC74HC4053FR
IC708 TL084CNS-L
IC709 MC74HC04AF-R
IC710 SN74LS221NSR
IC711 MC74HC4066AF-R
IC712 MC74HC14AF-R
IC714 MC74HC163F-R
IC781 MC74HC374F-R
IC782 MC74HC32AF-R
IC783 MC74HC157AFR
IC791 MM74HC221AML
FL601 VLF0576T
FL602 VLF0576T
FL603 VLF0576T
FL604 VLF0576T
L601 VLP0017
L602 VLP0017
L603 VLP0017
L605 1R5U
L606 100U
L607 100U
L701 100U
L703 100U
L704 100U
D601 MA704-TW
D602 2SA1022-BCTW
D603 2SD601-QRTW
D604 2SC2295-BCTW
D605 2SC2295-BCTW
D606 2SC2295-BCTW
D607 MA153-TW
D701 2SD601-QRTW
D702 MA704-TW
D703 MA151K-TW
D704 MA153-TW
D705 MA153-TW
D706 2SD601-QRTW
D707 2SC3757-QRTW
D708 2SA1226T2E34
D709 2SA1226T2E34
D710 2SC3757-QRTW
D711 MA151WA-TW
D712 MA151K-TW
D720 MA151WA-TW
D721 MA151WA-TW
D722 MA151WA-TW
D723 MA151WA-TW
D724 MA151WA-TW
D725 MA151WA-TW
D726 MA151WA-TW
D727 MA151WA-TW
D728 MA151WA-TW
D729 MA151WA-TW
D730 MA151WA-TW
D731 MA151WA-TW
D732 MA151WA-TW
D733 MA151WA-TW
D734 MA151WA-TW
D735 MA151WA-TW
D736 MA151WA-TW
D737 MA151WA-TW
D738 MA151WA-TW
D739 MA151WA-TW

SENC & P IN P
SCHEMATIC DIAGRAM

TYPE \ MODEL	AU-65H	AU-63H	AU-62H
NTSC	VEP83170A	Not Used	Not Used
PAL	VEP83170B	Not Used	Not Used

SENC & P IN P SCHEMATIC DIAGRAM 1/2(FOR AU-65H)

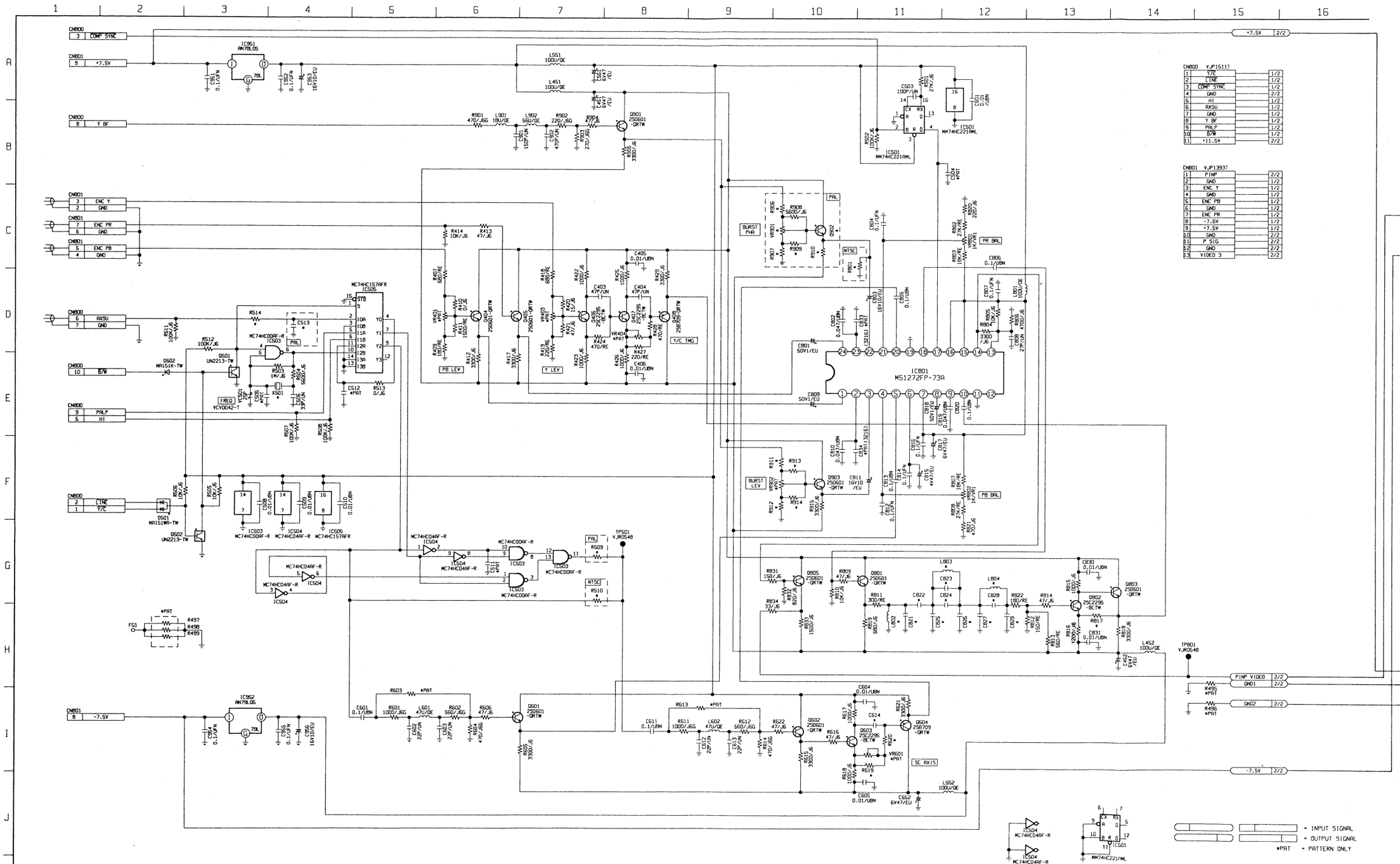

REVERSE SIDE **DECODER SCHEMATIC DIAGRAM**

SENC & P IN P SCHEMATIC DIAGRAM 2/2(FOR AU-65H)

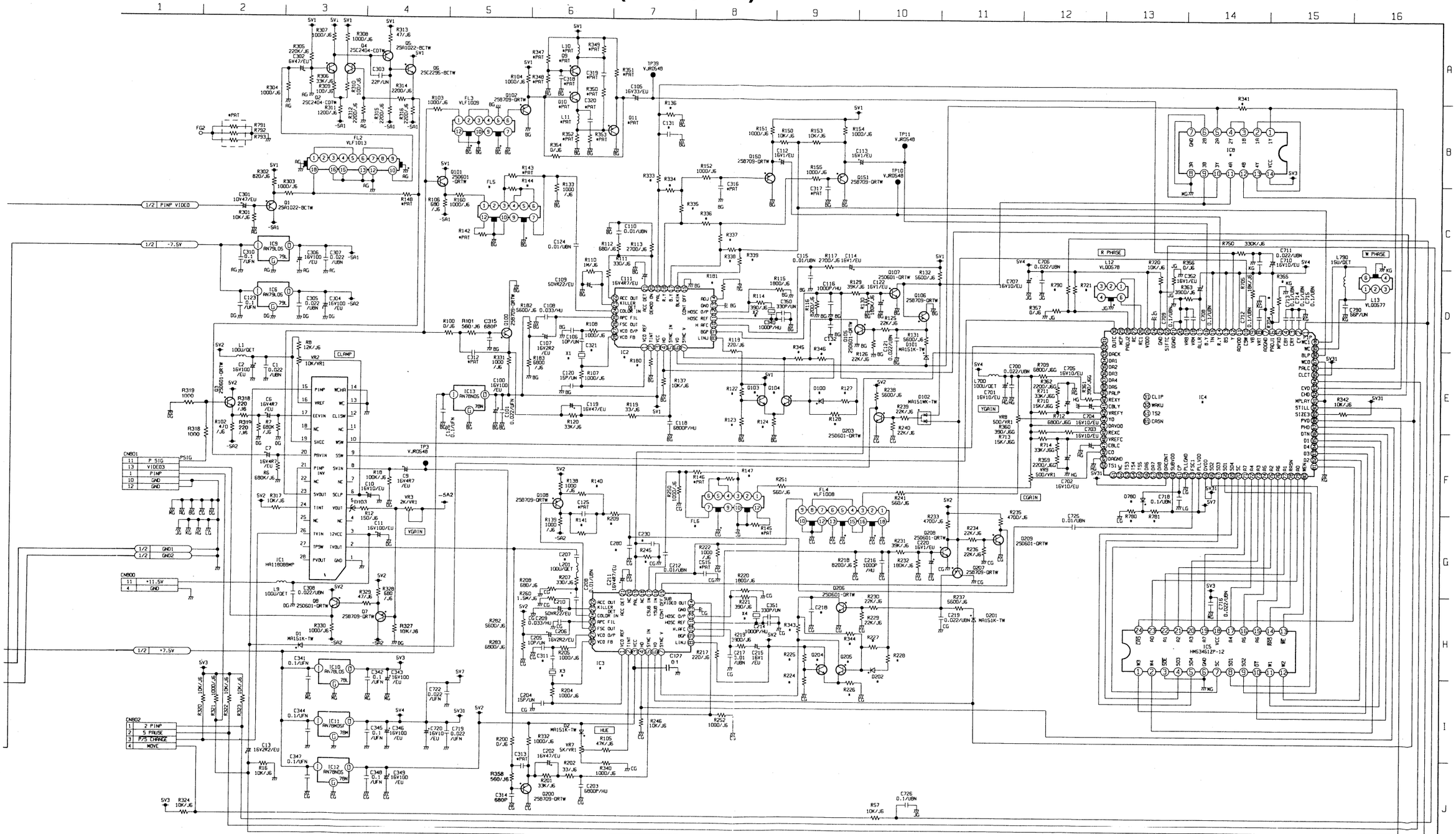

MODEL / TYPE	AU-65H	AU-63H	AU-62H
NTSC	VEP84095J	VEP84095C	VEP84095C
PAL	VEP84095K	VEP84095E	VEP84095E

W6(AUDIO) SCHEMATIC DIAGRAM 1/4 (LINEAR AUDIO)

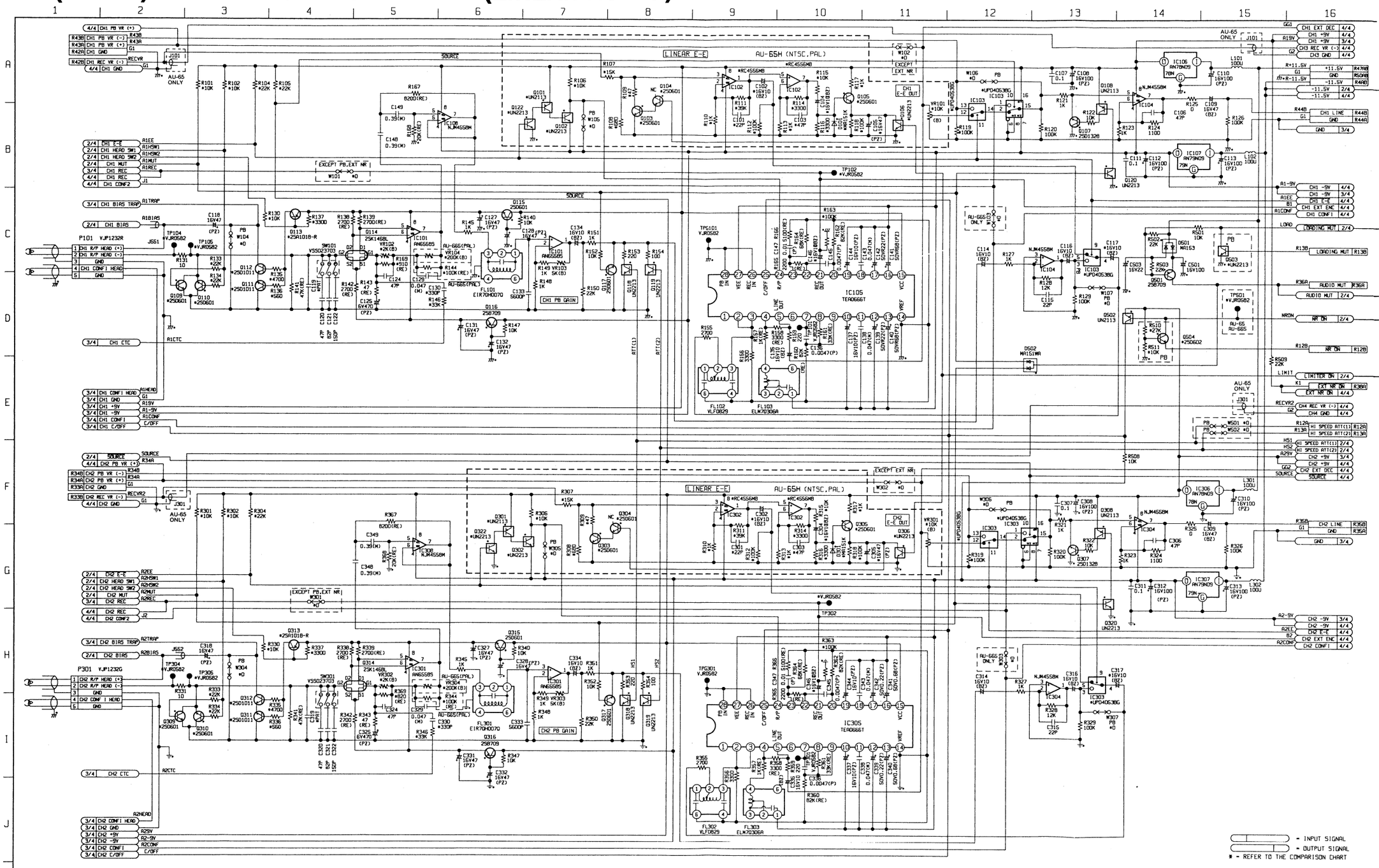

W6(AUDIO) SCHEMATIC DIAGRAM 2/4 (REC, TC)

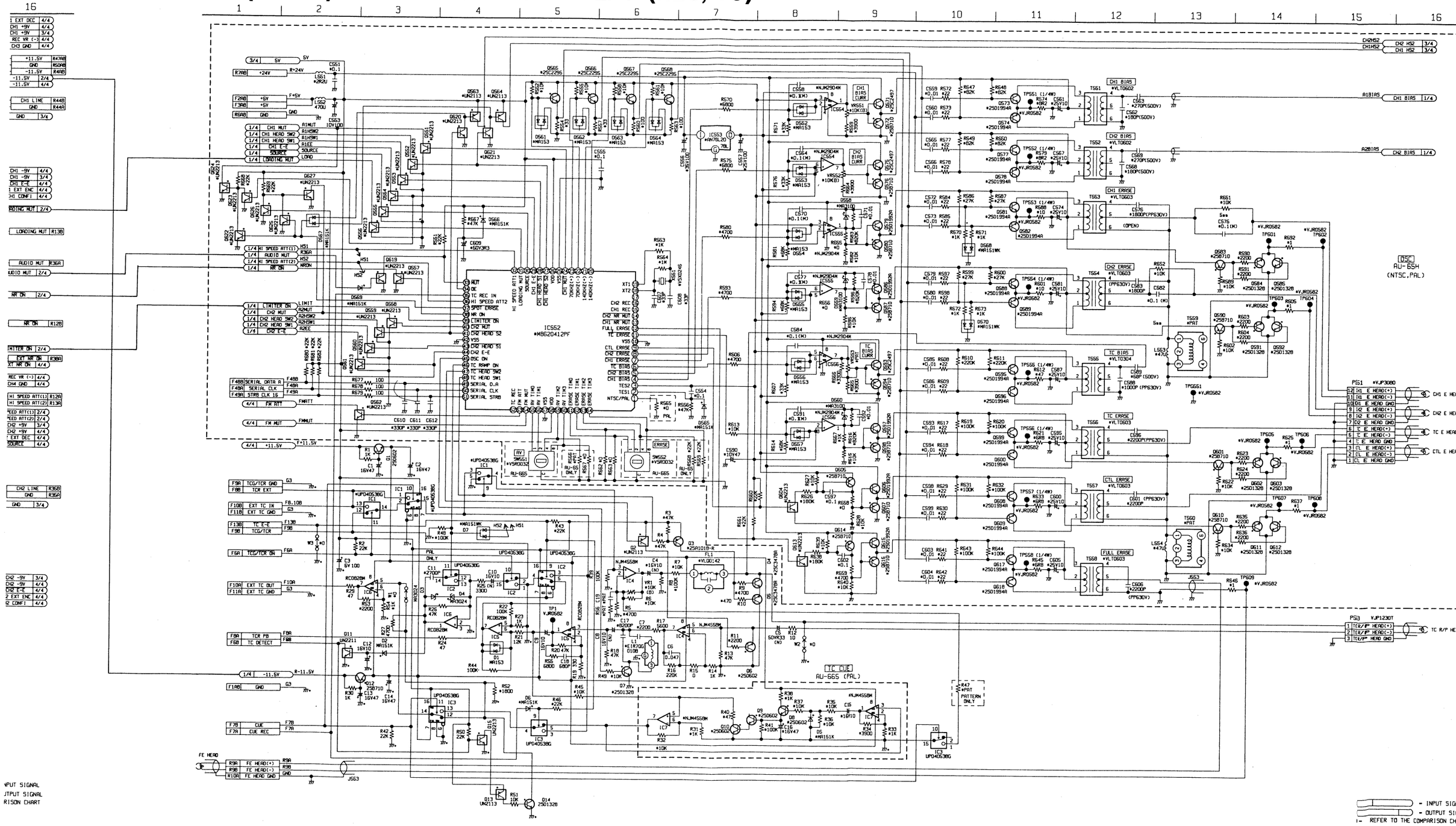

TYPE \ MODEL	AU-65H	AU-63H	AU-62H
NTSC	VEP84095J	VEP84095C	VEP84095C
PAL	VEP84095K	VEP84095E	VEP84095E

W6(AUDIO) SCHEMATIC DIAGRAM 3/4 (CTL REC)

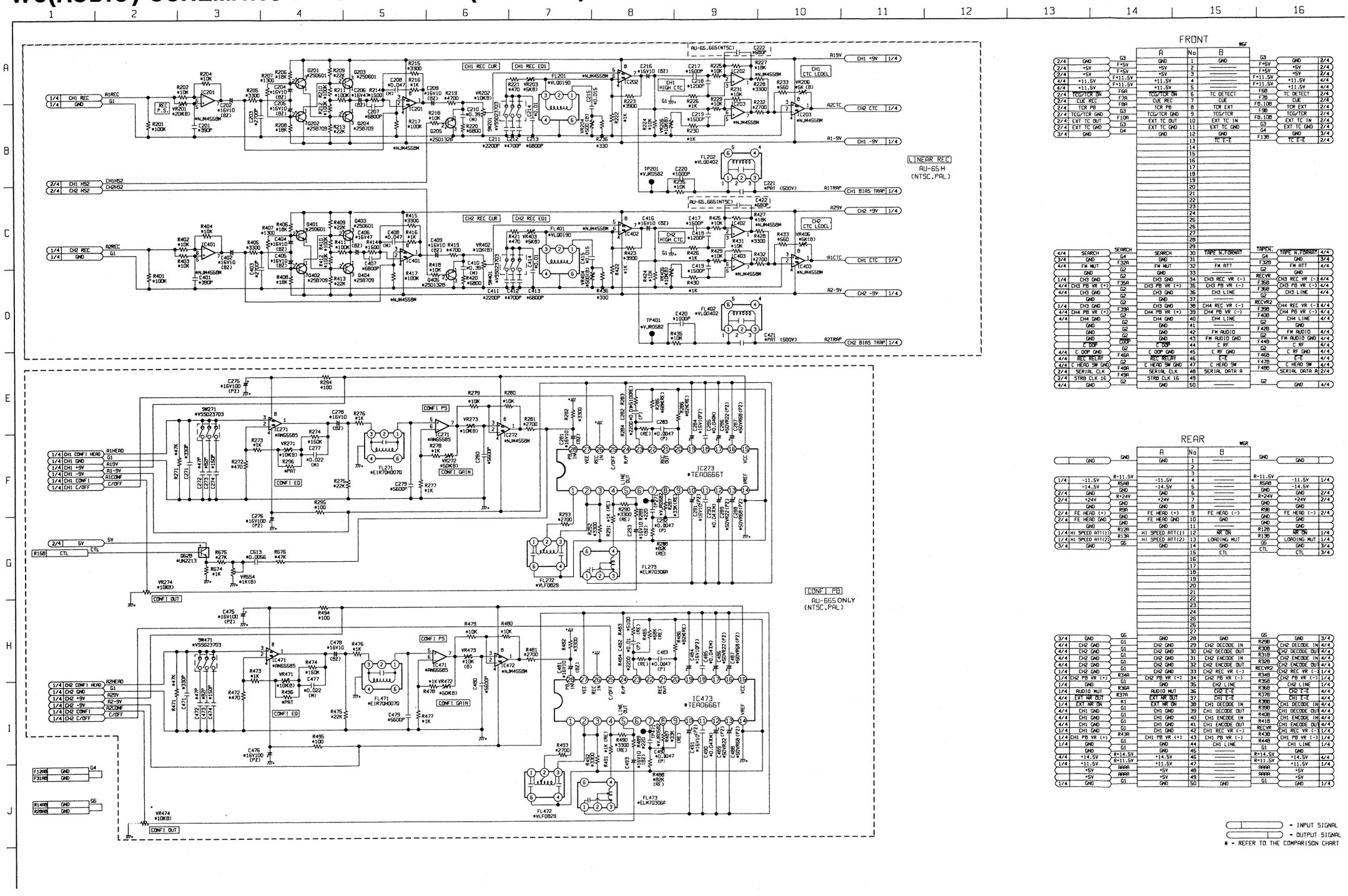

- = INPUT SIGNAL
- = OUTPUT SIGNAL
* = REFER TO THE COMPARISON CHART

REVERSE SIDE AUDIO SCHEMATIC DIAGRAM

W6(AUDIO) SCHEMATIC DIAGRAM 4/4 (FM AUDIO)

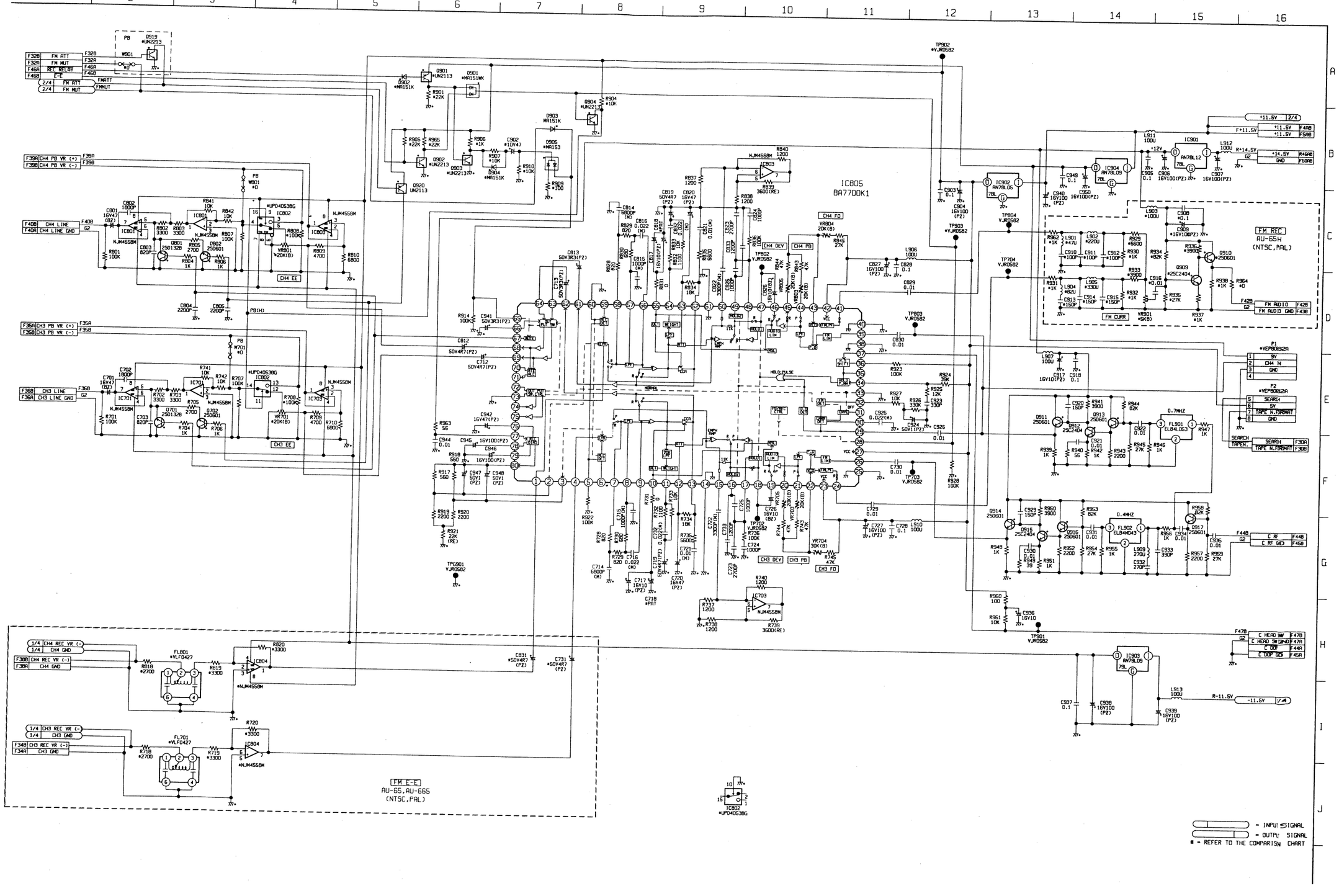

B0(B,MOTHER) SCHEMATIC DIAGRAM 1/2

TYPE \ MODEL	AU-65H	AU-63H	AU-62H
NTSC	VEP80549H	VEP80549K	VEP80549J
PAL	VEP80549H	VEP80549K	VEP80549J

VJP1233T

CN51		FROM / TO		
1	CAP MAIN CLK	B1-R5A		
2	GND	B1-R5B		
3	CAP OSC	B1-R5C		
4	GND	B1-R5B		
5	+7.5V	B1-L3C		
6	-7.5V	B1-L31C		
7	TR FG 1	B1-R14A		

VJP1233T

CN52		FROM / TO			
1	(TCR EXT)	B2-L20A			AU-65H AU-65/665/662/760 ONLY
2	(TC GND)	B2-L30C			
3	TCR PB	B2-L26C			
4	TCG/TCR	B2-L30A			
5	TC GND	B2-L30C			
6	TC EE	B1-L20A			

VJP1394T

CN54		FROM / TO			
1	GND	B1-L24B			
2	RECEIVE B	B1-L23C			
3	TRANSMIT B	B1-L24C			
4	GND	B1-L23B			
5	RECEIVE A	B1-L23A			
6	TRANSMIT A	B1-L24A			
7	SPARE 1 EDIT SEARCH	B1-L25A			AU-662 ONLY
8	SPARE 2 DUB SW	B1-L25C			AU-662 ONLY
9	(GND)	B2-L4A,B			AU-665/662/760 ONLY
10	(REF VIDEO IN)	B2-L3A			
11	(DUB CF)	B2-L3B			
12	(GND)	B2-L4A,B			
13	(BS)	B2-L5A			

VJP1929T

CN56		FROM / TO		
1	CN SERIAL IN	B1-L26A		
2	CN SERIAL GND	B1-L25B		
3	CN SERIAL OUT	B1-L27A		
4	DIAL STILL	B1-L26B		
5	S≠0	B1-L26C		
6	S≠1	B1-L27C		
7	JOG POSITION	B1-L27B		
8	+24V	POWER10-5		
9	+5V	POWER10-1		
10	+5V	POWER10-1		
11	GND	POWER10-4		
12	GND	POWER10-4		
13	REM1 LED	B1-L13A		
14	REM2 LED	B1-L13B		

VJP1248T

CN58		FROM / TO		
1	(GND)	B2-L19A,C		AU-65/665/662/760 ONLY
2	(REC VITC)	B2-L17A		
3	(VITC)	B2-L17C		
4	(GND)	B2-L19A,C		
5	(COMP SYNC)	B2-L18A		
6	(VP REC)	B2-L18C		
7	GND	B2-L21A		
8	Y PB 2	B2-L20A		

VJP1930T

CN59		FROM / TO		
1	R SYNC	B2-L22A		
2	R VP	B1-L30C	B2-L22C	
3	GND	B1-L29B,C	B2-L23C	B2-L25C
4	Y PB SYNC	B2-L24C		
5	TAPE V	B2-L24A		
6	GND	B1-L29B,C	B2-L23C	B2-L25C
7	TC CF	B2-L23A		
8	R HD	B1-L30A		
9	GND	B1-L29B,C		
10	CHARACTOR	B1-L28A		
11	CHARACTOR GATE	B1-L28C		
12	GND			
13	(DUB CF)	B2-L5B		AU-663/662/760 ONLY
14	(REF VIDEO)	B2-L5C		
15	(GND)	B2-L6C		

VJP1246T (AU-665/63/63H ONLY)

CN60		FROM / TO		
1	STILL POS F	B1-R2A		
2	STILL POS R	B1-R2B		
3	AT AK	B1-R2C		
4	AT ON	B1-R3B		
5	NORMAL	B1-R4A		
6	AT EJECT	B1-R4C		

VJP1244T (AU-65H ONLY)

CN61		FROM / TO		
1	2 PINP	B1-L19B		
2	5 PAUSE	B1-L20B		
3	P/S CHANGE	B1-L19C		
4	MOVE	B1-L20C		

VJP2856A026

CN53

FROM / TO			A	NO	B	FROM / TO		
CN610-3			CAP OVERIDE	1	CTL PULSE	B1-R3C	CN50-31A	B2-L26C
B1-R1A,B,C			GND	2	STRB CLK 16	B1-R8A	CN310-2	CN57-2
B1-R7A	CN50-29B	CN57-1	CN310-1	3	SERIAL DATA SO IN	B1-L22A		
B1-L22B			SERIAL DATA SO OUT	4	SEARCH 2	B1-L22C		
B1-L21C			SEARCH 1	5	JOG PLS	B1-L21A		
B1-L19A			EJECT SW CMND	6	START MARK	B1-L18C		
B1-L18B			SEARCH ø	7	SERVO LOCK LAMP	B1-L16A		
B1-L15B			STANBY ON STATUS	8	CASSETT IN	B1-L15A		
B1-L14C			STANBY ON CMND	9	PREROLL CMND	B1-L14B		
B1-L14A			LOCAL EN	10	+11.5V	B1-L11C	POWER10-2	B2-L14C
B1-L4B			CTS	11	RXD	B1-L4A		
B1-L3B			RTS	12	TXD	B1-L3A		
B1-L2A,B,C			+5V	13	GND	B1-L1A,B,C		

B1-L
VJS2899A096

B1 SYSCON

L (LEFT)	A			B		C		
1	GND			←	CN53-13B	←	POWER10-4	
2	+5V			←	CN53-13A	←	POWER10-1	
3	TXD	CN53-12B		RTS	CN53-12A	+7.5V	CN61-5	B2-3C
4	RXD	CN53-11B		CTS	CN53-11A	+14.5V	POWER10-3	B2-4C
5	D7L	B2-11B		D6L	B2-11A	CSDL	B2-8C	
6	D5L	B2-10B		D4L	B2-10A	WE WR	B2-9C	
7	D3L	B2-9B		D2L	B2-9A	WE RD	B2-10C	
8	D1L	B2-8B		D0L	B2-8A	SYS INT	B2-11C	
9	A0L	B2-12A		A1L	B2-12B	TC INT	B2-12C	
10	A2L	B2-13A		A3L	B2-13B	TAPE FWD	B2-13C	CN50-20A
11	A4L	B2-14A		A5L	B2-14B	+11.5V	POWER10-2	CN53-10B B2-14C
12	A6L	B2-15A		A7L	B2-15B	+24V	POWER10-5	CN56-8 CN55-14
13	REM1 LED	CN56-13		REM2 LED	CN56-14	EJECT LED	CN50-20B	
14	LOCAL EN	CN53-10A		PREROLL CMND	CN53-9B	STANBY ON CMND	CN53-9A	
15	CASSETT IN	CN53-8B		STANBY ON STATUS	CN53-8A	ADV 2	CN50-4B	B2-15C
16	SERVO LOCK LAMP	CN53-7B		EE WIDE / (PCM DET)	CN50-14A	WIDE IN / (DIGITAL SW)	CN311-1	
17	FREEZE / (DUB)	CN50-11A		PHASE INH	CN50-13B	(ANALOG SW)	CN311-2	
18				SEARCH ø	CN53-7A	START MARK	CN53-6B	
19	EJECT SW CMND	CN53-6A		2 PINP	CN61-1	P/S CHANGE	CN61-3	
20	TC EE	CN52-6		5 PAUSE	CN61-2	MOVE	CN61-4	
21	JOG PLS	CN53-5B				SEARCH 1	CN53-5A	
22	SERIAL DATA SO IN	CN53-3B		SERIAL DATA SO OUT	CN53-4A	SEARCH 2	CN53-4B	
23	RECEIVE A	CN54-5		GND	CN54-4	RECEIVE B	CN54-2	
24	TRANSMIT A	CN54-6		GND	CN54-1	TRANSMIT B	CN54-3	
25	SPARE 1	CN54-7		CN SERIAL GND	CN56-2	SPARE 2	CN54-8	
26	CN SERIAL IN	CN56-1		DIAL STILL	CN56-4	S≠0	CN56-5	
27	CN SERIAL OUT	CN56-3		JOG POSITION	CN56-7	S≠1	CN56-6	
28	CHARACTOR	CN59-10		-14.5V	CN50-21A	CHARACTOR GATE	CN59-11	
29	GND	CN59-3,6,9		←	CN59-3,6,9	←	CN59-3,6,9	
30	R HD	CN59-8		-11.5V	CN50-22A	R VP	CN59-2	B2-22C
31	PLAY/(LOADING MUT)	CN50-22B	CN410-1	CUE	CN410-2	-7.5V	CN51-6	B2-31C
32	GND			←		←	POWER10-4	

B1-R
VJS2899A096

B1 SYSCON

R (RIGHT)	A				B			C		
1	GND				←			←	POWER10-4	
2	STILL POS F	CN60-1			STILL POS R	CN60-2		AT AK	CN60-3	
3	PINCH ON	CN50-32B			AT ON	CN60-4		CTL PULSE	CN50-31A	B2-26C CN53-13B
4	NORMAL	CCN60-5			R/P HEAD	CN60-31B		AT EJECT	CN60-7	
5	CAP MAIN CLK	CN61-1			GND	CN61-2,4		CAP OSC	CN61-3	
6	S FRAMING	CN50-30A	B2-20C		FRAMING /2	CN50-30B	B2-26A	FRAMING /4	CN50-29A	B2-25A
7	SERIAL CLK	CN50-29B	CN310-1	CN57-1,CN53-3A	SERIAL DATA CAP	CN50-27A		SERIAL DATA SRV	CN50-27B	
8	STRB CLK 16	CN50-28A	CN310-2	CN57-2,CN53-2B	SERIAL DATA DRM	CN50-26A		SERIAL DATA AUD/FM ATT	CN50-26B	
9	STRB CLK 8	CN50-26B			SERIAL DATA REL	CN50-25A		SERIAL DATA PCM	CN310-3	
10	SERIAL DATA FRT	CN50-25B			SERIAL DATA TIM	CN50-24A		SERIAL DATA REC	CN57-3	
11	RE START	CN50-24B			CAP FWD	CN50-23A		TC DETECT	CN50-23B	
12	S REEL PULSE 1	CN57-8	CN610-2		T REEL PULSE 1	CN57-10	CN610-1	TR PHOTO 1	CN57-5	
13	S REEL PULSE 2	CN57-9			T REEL PULSE 2	CN57-11		TR PHOTO 2	CN57-6	
14	TR FG 1	CN51-7			TR FG 2	CN50-21B		SERVO LOCK	CN50-19B	
15	WIDE OUT / (PCM LED)	CN311-3			(DUB IN)/(HI SPEED ATT1)	CN50-19A		N-STD AUTO	CN50-17A	
16	IN SCH	CN50-18A			(CPNT CF ON) /(HI SPEED ATT2)	CN50-18B		VISC ON	CN50-16B	
17	Y/C	CN50-17B			(VIDEO IN) /(FM MUT)	CN50-16A		LOADING M +	CN55-1	
18	HI SPEED	CN50-15A			LOW RF	CN50-15B		LOADING M -	CN55-2	
19	TG OFF	CN50-14B			V PHASE CF	CN50-13A		SMALL R M -	CN55-3	
20	STD	CN50-12A			LINE	CN50-12B		SMALL R M +	CN55-4	
21	REF DET	CN50-11B	B2-7B		REF SCH	CN50-10A	B2-7A	ELAVATOR M -	CN55-5	
22	C OFF	CN50-9A			FRM ON	CN50-9B		ELAVATOR M +	CN55-6	
23	CF SELECT 1	CN50-8B			CF SELECT 2	CN50-7A		PINCH SOL C	CN55-7	
24	EXT	CN50-6A			ADV CONT	CN50-6B		PINCH SOL B	CN55-8	
25	INT	CN50-5B	B2-7C		TAPE R/P	CN50-4B		T BRAKE SOL C	CN55-9	
26	SEARCH	CN50-3A			AT MODE	CN50-3B		T BRAKE SOL B	CN55-10	
27	FAN TRBL	CN50-2B			ADV 1	CN50-2A		S BRAKE SOL C	CN55-11	
28	AUTO OFF LED	CN50-1B			R FRAMING	CN50-1A		S BRAKE SOL B	CN55-12	
29	TAPE WIDE / (DUB CF ON)	CN50-8A			V PHASE 1	CN50-10B		CLEANING SOL C	CN55-13	
30	EJECT TAPE	CN50-5A			CF SELECT 3	CN50-7B		UNREG GND	POWER10-6	
31	+5V				←			←	POWER10-1	
32	GND				←			←	POWER10-4	

VJP1393T

CN57		FROM / TO			
1	SERIAL CLK	CN50-29B	CN310-1	CN53-3A	B1-R7A
2	STRB CLK 16	CN50-28A	CN310-2	CN53-2B	B1-R8A
3	SERIAL DATA REC	B1-R10C			
4	GND				
5	TR PHOTO 1	B1-R12C			
6	TR PHOTO 2	B1-R13C			
7	GND				
8	S REEL PULSE 1	B1-R12A	CN610-1		
9	S REEL PULSE 2	B1-R13A			
10	T REEL PULSE 1	B1-R12B	CN610-2		
11	T REEL PULSE 2	B1-R13B			
12	+5V	POWER10-1			
13	+5V	POWER10-1			

VJP1391T

CN55		FROM / TO		
1	LOADING M +	B1-R17C		
2	LOADING M -	B1-R18C		
3	SMALL R M -	B1-R19C		
4	SMALL R M +	B1-R20C		
5	ELAVATOR M -	B1-R21C		
6	ELAVATOR M +	B1-R22C		
7	PINCH SOL C	B1-R23C		
8	PINCH SOL B	B1-R24C		
9	T BRAKE SOL C	B1-R25C		
10	T BRAKE SOL B	B1-R26C		
11	S BRAKE SOL C	B1-R27C		
12	S BRAKE SOL B	B1-R28C		
13	CLEANING SOL C	B1-R29C		
14	+24V	POWER10-5		

B0(B,MOTHER) SCHEMATIC DIAGRAM 2/2

VJP1230T (PCM ONLY)

CN310		FROM / TO			
1	SERIAL CLK	CN50-29B	CN57-1	CN53-3A	B1-R7A
	OPEN SOL ON	P46S-3			AU-662 ONLY
2	STRB CLK 16	CN50-28A	CN57-2	CN53-2B	B1-R8A
	OPEN SOL OFF	P46S-2			AU-662 ONLY
3	SERIAL DATA PCM	B1-R9C			
	+11.5V	P46S-1			

VJP1230T (AU-65H/AU-63H/AU-62H ONLY)

CN311		FROM / TO		
1	WIDE IN /(DIGITAL SW)	B1-L16C	CN311-1	
2	(ANALOG SW) .	B1-L17C		
3	WIDE OUT /(PCM LED)	B1-R15A	CN311-3	

VJP1229T (PAL ONLY)

CN410		FROM / TO			
1	PLAY	CN50-22B	B1-L31A		
	SEARCH				AU-662 ONLY
2	CUE	B1-L31B			
	TAPE N FWT	MG F30R	(JUMPER)		AU-662 ONLY
3	CUE I	B1-L19B			

VJP1230T

CN610		FROM / TO		
1	T REEL PULSE 1	CN57-10	B1-R12B	
2	S REEL PULSE 1	CN57-8	B1-R12A	
3	CAP OVERIDE	CN53-1A		

VJP1709

POWER10		FROM / TO		
1	+5V			
2	+11.5V			
3	+14.5V			
4	GND			
5	+24V			
6	UNREG GND			

B2
VJS2899A096

B2 TCG/TCR (OPTION)

L (LEFT)	A				B				C			
1	GND				←				←			
2*	+5V				←				←			
3	RE: VIDEO IN	CN54-10			DUB CF IN	CN54-11			+7.5V	B1-L3C	CN51-5	
4	GND	CN54-9,12			GND	CN54-9,12			+14.5V	B1-L4C		
5	BS	CN54-13			DUB CF	CN59-13			REF VIDEO	CN59-14		
6	GND				GND				GND	CN59-15		
7	REF SCH	B1-R21B	CN50-10A		REF DET	B1-R21A	CN50-11B		INT	B1-R25A	CN50-5B	
8	D0L	B1-L8B			D1L	B1-L8A			CS DL	B1-L5C		
9	D2L	B1-L7B			D3L	B1-L7A			RE WR	B1-L6C		
10	D4L	B1-L6B			D5L	B1-L6A			RE RD	B1-L7C		
11	D6L	B1-L5B			D7L	B1-L5A			SYS INT	B1-L8C		
12	A0L	B1-L9A			A1L	B1-L9B			TC INT	B1-L9C		
13	A2L	B1-L10A			A3L	B1-L10B			TAPE PWD	B1-L10C	CN50-20A	
14	A4L	B1-L11A			A5L	B1-L11B			+11.5V	B1-L11C	CN53-10B	POWER10-2
15	A6L	B1-L12A			A7L	B1-L12B			ADV 2	B1-L15C	CN50-4B	
16	GND				GND				GND			
17	REF VITC	CN58-2							VITCE	CN58-3		
18	COMP SYNC	CN58-5							VP REC	CN58-6		
19	GND	CN58-1,4							GND	CN58-1,4		
20	Y PB 2	CN58-8							RVP	B1-R6A	CN50-30A	
21	GND	CN58-7							GND			
22	R SYNC	CN59-1							RVP	CN59-2	B1-L30C	
23	TC CF	CN59-7							GND	CN59-3,6		
24	TAPE V	CN59-5							Y PB SYNC	CN59-4		
25	FRAMING /4	B1-R5C	CN50-29A						GND	CN59-3,6		
26	FRAMING /2	B1-R5B	CN50-30B						CTL PULSE	B1-R3C	CN50-31A	CN53-1B
27	TCG/TCR DN	CN50-32A							GND			
28	TCR EXT	CN52-1							TCR PB	CN52-3		
29	GND								GND			
30	TCG/TCR	CN52-4							TCG/TCR GND	CN52-2,5		
31									-7.5V			
32	GND				←				←			

C2 0.047(M)

C1 6V220

VJP2893A064

CN50

FROM / TO				A	NO	B	FROM / TO			
B1-R28B				R FRAMING	1	AUTO OFF LED	B1-R28A			
B1-R27B				ADV 1	2	FAN TRBL	B1-R27A			
B1-R26A				SEARCH	3	AT MODE	B1-R26B			
B1-R25B				TAPE R/F	4	ADV2	B1-L15C	B2-L15C		
B1-R30A				EJECT TAPE	5	INT	B1-R25A	B2-L7C		
B1-R24A				EXT	6	ADV CONT	B1-R24B			
B1-R23B				CF SELECT 2	7	CF SELECT 3	B1-R30B			
B1-R29A				TAPE WIDE /(DUB CF ON)	8	CF SELECT 1	B1-R29A			
B1-R22A				C OFF	9	FAN ON	B1-R22B			
B1-R21B	B2-L7A			REF SCH	10	V PHASE 1	B1-R23B			
B1-L17A				FREEZE /(DUB)	11	REF DET	B1-R21A	B2-L7B		
B1-R20A				STD	12	LINE	B1-R20B			
B1-R19B				V PHASE CF	13	PHASE INH	B1-L17B			
B1-L18B				EE WIDE /(PCM DET)	14	ID OFF	B1-R19A			
B1-R18A				AT SPEED	15	LOW RF	B1-R18B			
B1-R17B				(VIDEO IN)/(FM MOT)	16	VISC ON	B1-R16C			
B1-R15C				N-STD AUTO	17	Y/C	B1-R17A			
B1-R16A				IN SCH	18	(CMNT CF ON)/(HI SPEED ATT2)	B1-R16B			
B1-R15B				(DUB IN)/(HI SPEED ATT1)	19	SERVO LOCK	B1-R14C			
B1-L10C	B2-L13C			TAPE TWO	20	EJECT LED	B1-L13C			
B1-L20B				-14.5V	21	TR FG2 ▬	B1-R14B			
B1-L30B				-11.5V	22	PINP/ (LOADING MOT)/(PLAY)	B1-L31A	CN410-1		
B1-R11B				CAP TWO	23	TC DETECT	B1-R11C			
B1-R10B				SERIAL DATA TIM	24	RE START	B1-R11A			
B1-R9B				SERIAL DATA REL	25	SERIAL DATA FRT	B1-R10A			
B1-R8B				SERIAL DATA DRM	26	SERIAL DATA AUD/FM ATT	B1-R8C			
B1-R7B				SERIAL DATA CAP	27	SERIAL DATA SRV	B1-R7C			
B1-R8A	CN310-2	CN53-2B	CN57-2	STRB CLK 16	28	STRB CLK 8	B1-R9B			
B1-R6C	B2-L25A			FRAMING /4	29	SERIAL CLK	B1-R7A	CN310-1	CN53-3A	CN57-1
B1-R6A	B2-L20C			S FRAMING	30	FRAMING /2	B1-R6B	B2-26A		
B1-R3C	B2-L26C	CN53-1B		CLT PULSE	31	R/P HEAD	B1-R4B			
B2-27A				TCG/TCR DN	32	PINCH DN	B1-R3A			

FROM / TO			
-29B	CN310-1	CN53-3A	B1-R7A
-28A	CN310-2	CN53-2B	B1-R8A
10C			
12C			
13C			
12A	CN610-1		
13A			
12B	CN610-2		
13B			
110-1			
110-1			

FROM / TO		
17C		
18C		
19C		
20C		
21C		
22C		
23C		
24C		
25C		
26C		
27C		
28C		
29C		
R10-6		

SYSTEM CONTROL
SCHEMATIC DIAGRAM

MODEL / TYPE	AU-65H	AU-63H	AU-62H
NTSC	VEP86121A	VEP86121C	VEP86121B
PAL	VEP86121D	VEP86121F	VEP86121E

B1(SYSTEM CONTROL) SCHEMATIC DIAGRAM 1/5

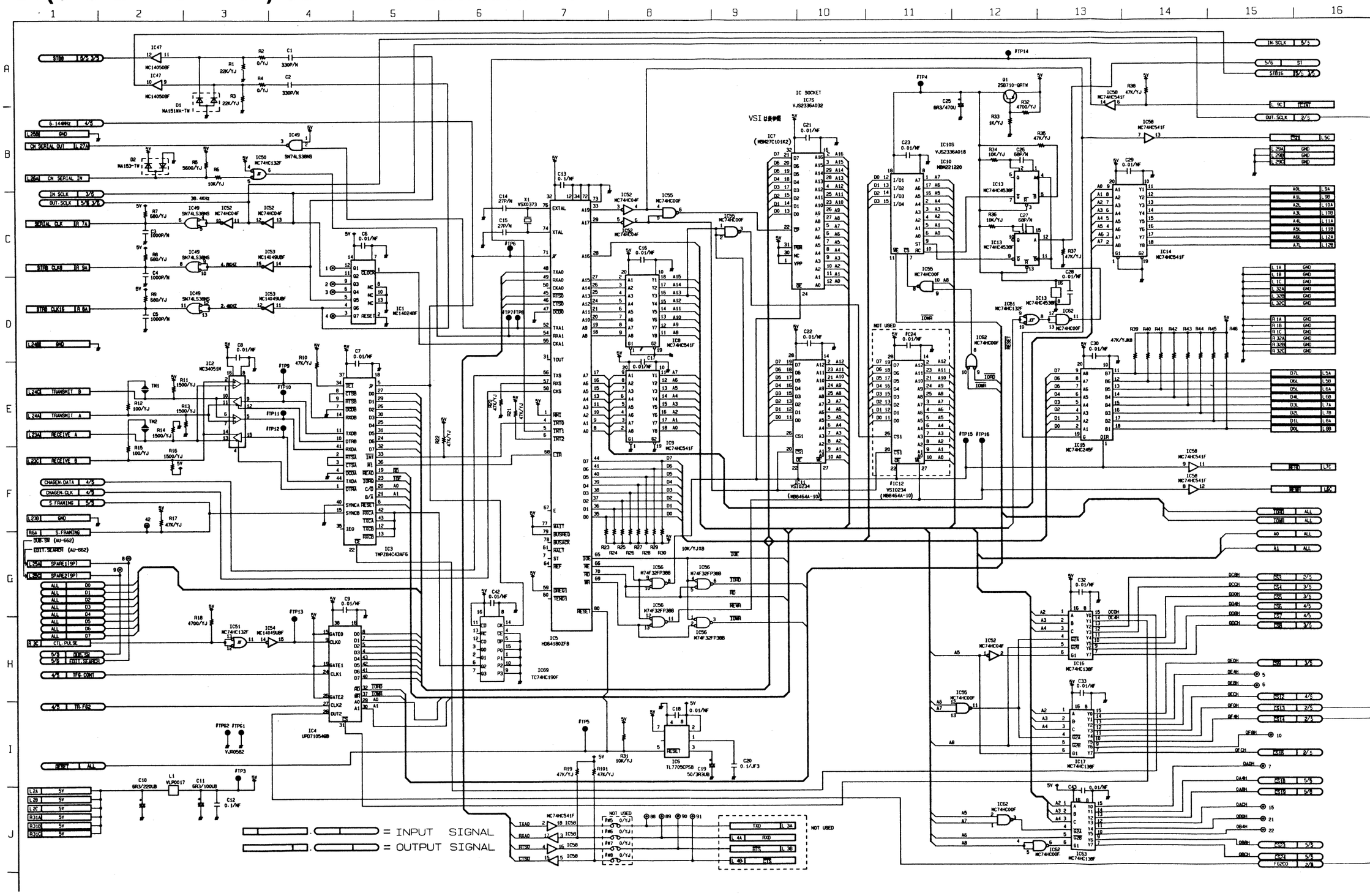

REVERSE SIDE **SYSTEM CONTROL SCHEMATIC DIAGRAM**

B1(SYSTEM CONTROL) SCHEMATIC DIAGRAM 2/5

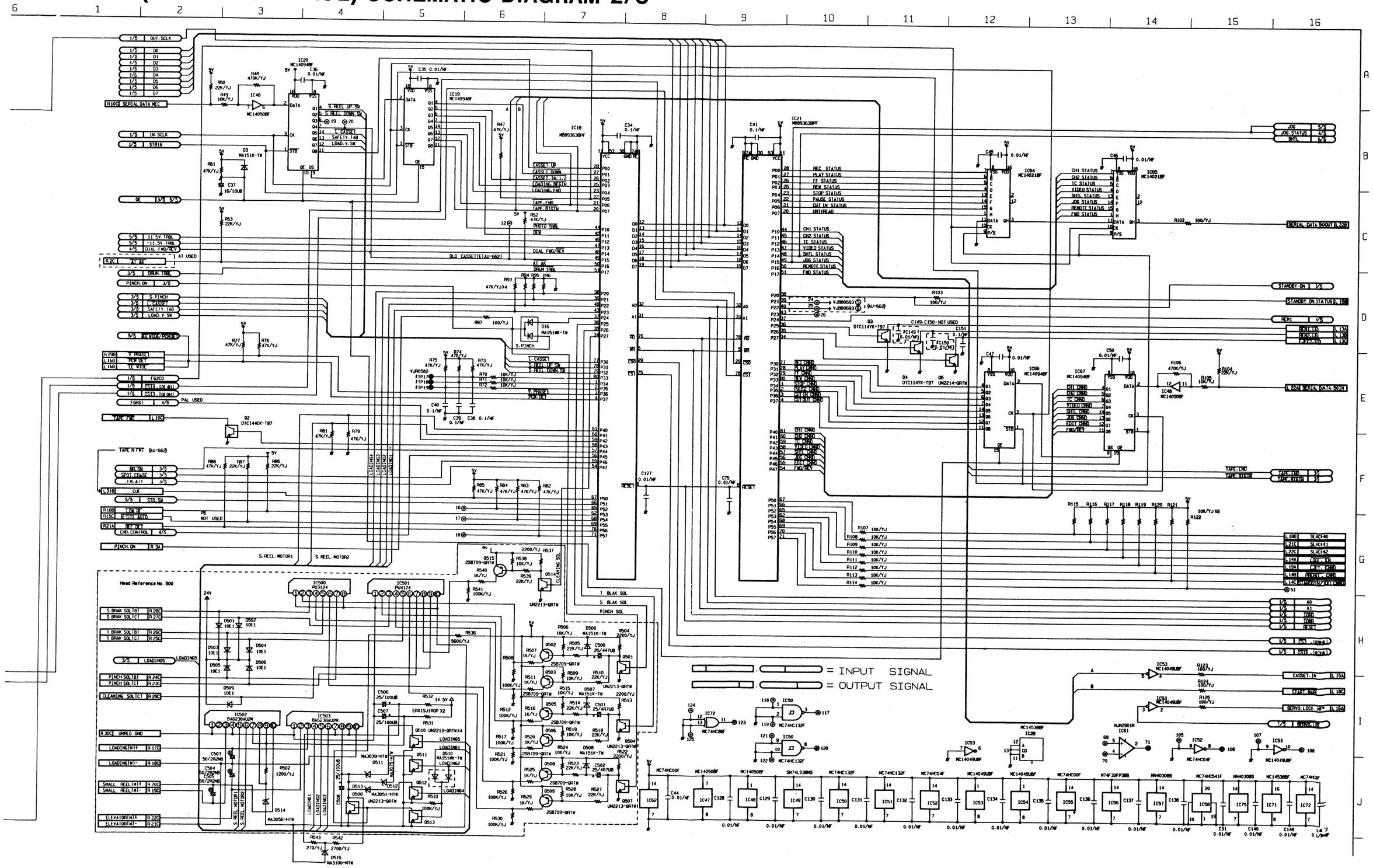

MODEL / TYPE	AU-65H	AU-63H	AU-62H
NTSC	VEP86121A	VEP86121C	VEP86121B
PAL	VEP86121D	VEP86121F	VEP86121E

B1(SYSTEM CONTROL) SCHEMATIC DIAGRAM 3/5

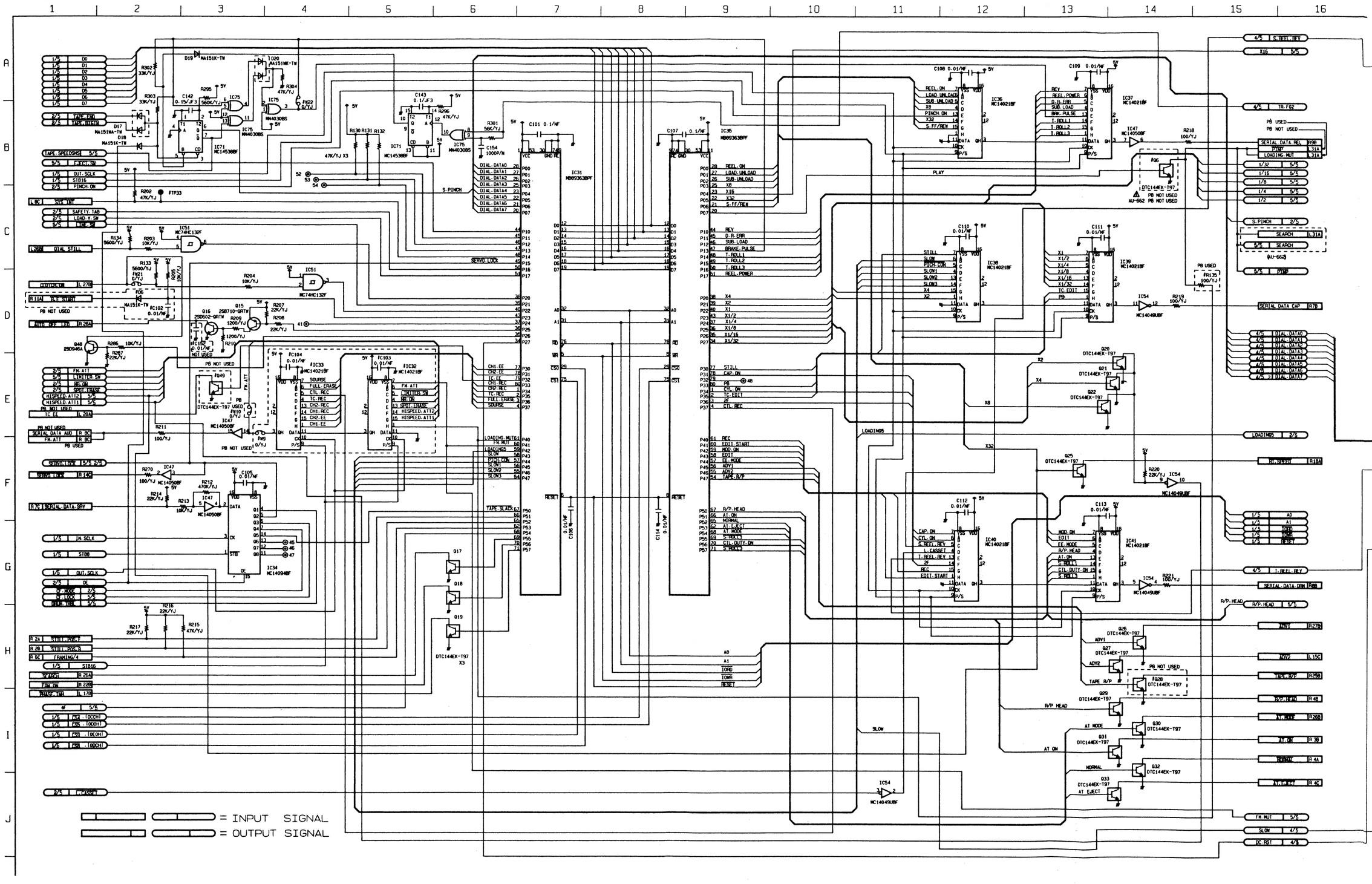

B1(SYSTEM CONTROL) SCHEMATIC DIAGRAM 4/5

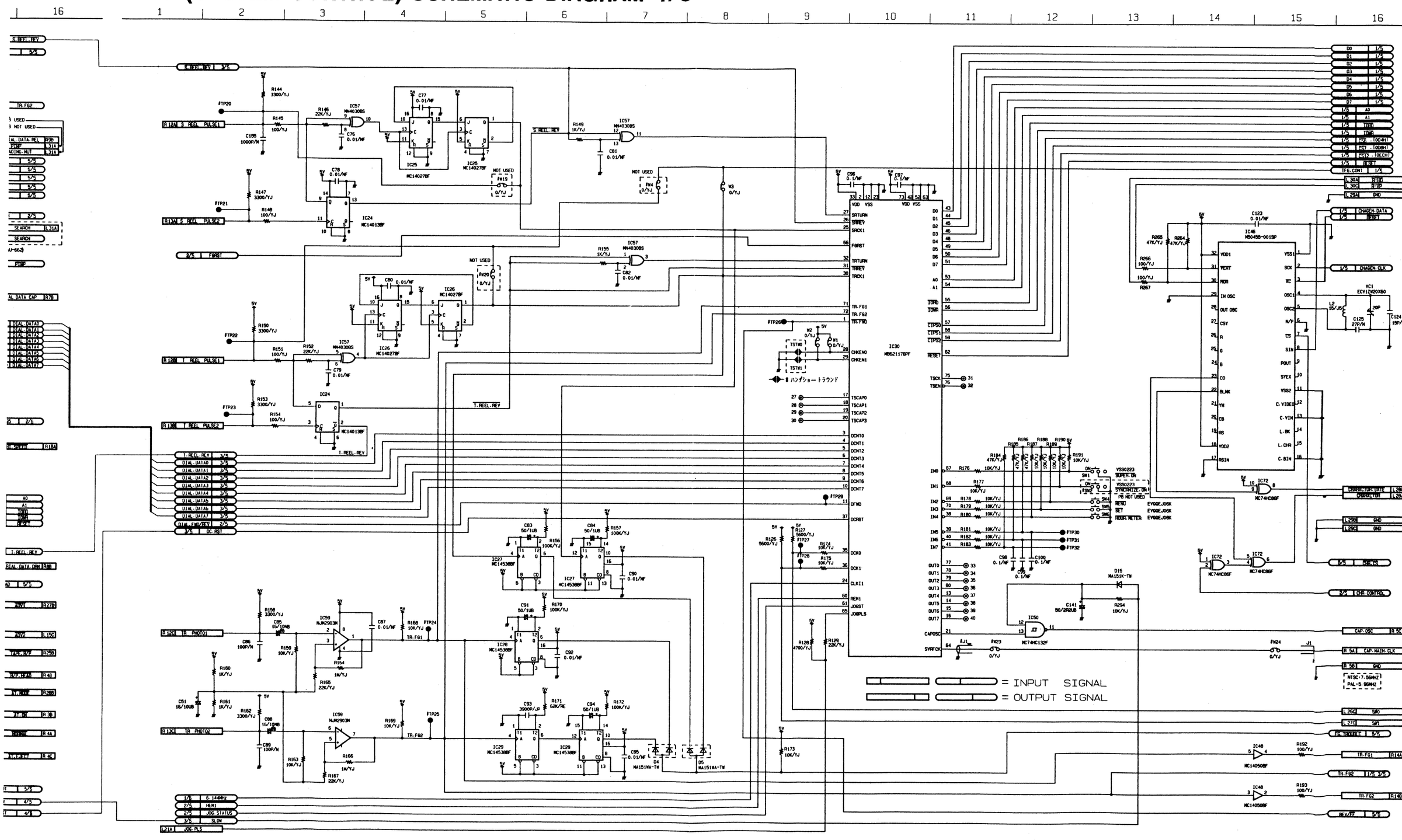

TYPE \ MODEL	AU-65H	AU-63H	AU-62H
NTSC	VEP86121A	VEP86121C	VEP86121B
PAL	VEP86121D	VEP86121F	VEP86121E

B1(SYSTEM CONTROL) SCHEMATIC DIAGRAM 5/5

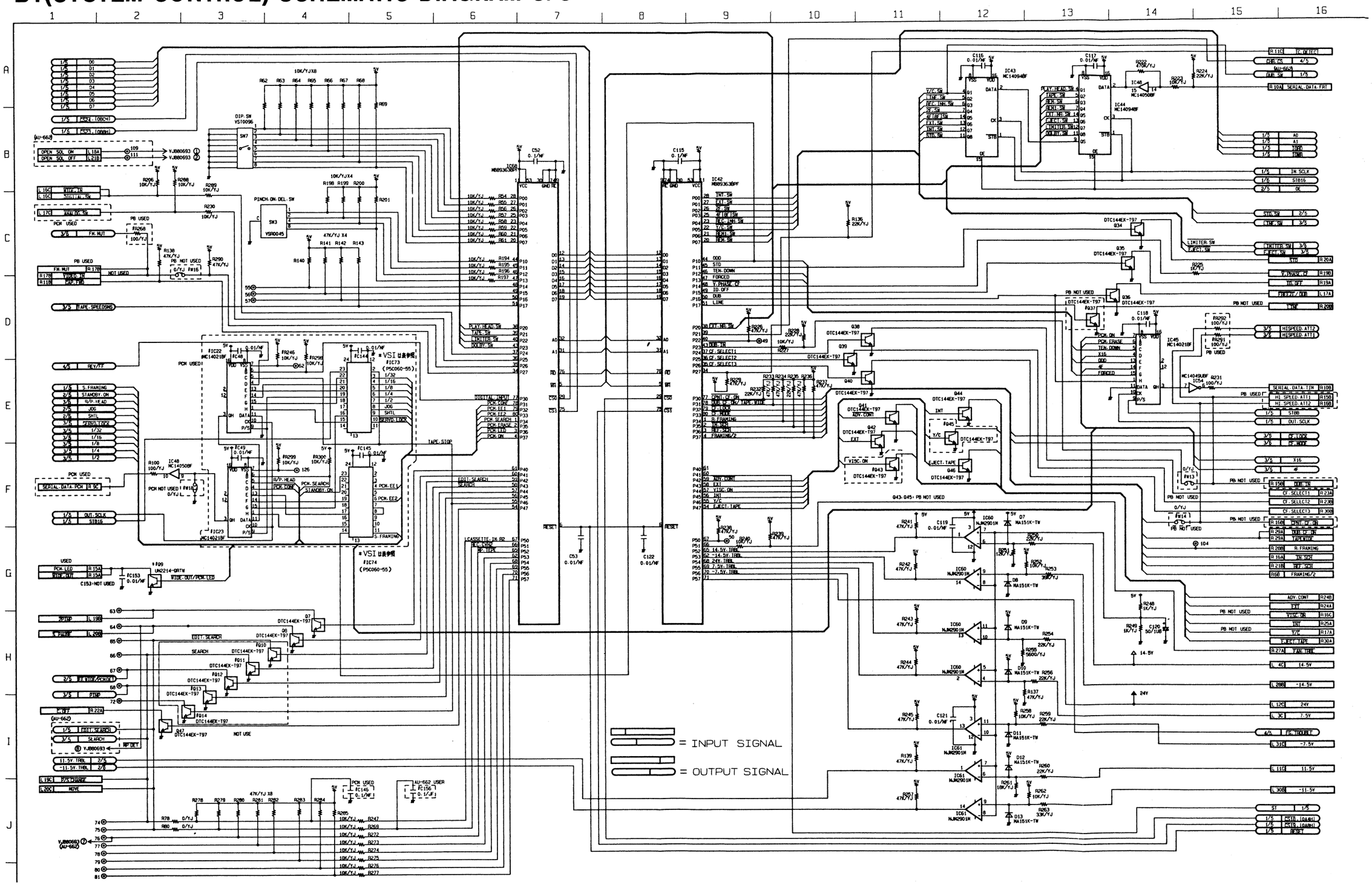

REVERSE SIDE SYSTEM CONTROL SCHEMATIC DIAGRAM

VIDEO I/O SCHEMATIC DIAGRAM

TYPE \ MODEL	AU-65H	AU-63H	AU-62H
NTSC	VEP83174A	VEP83174B	VEP83174B
PAL	VEP83174C	VEP83174B	VEP83174B

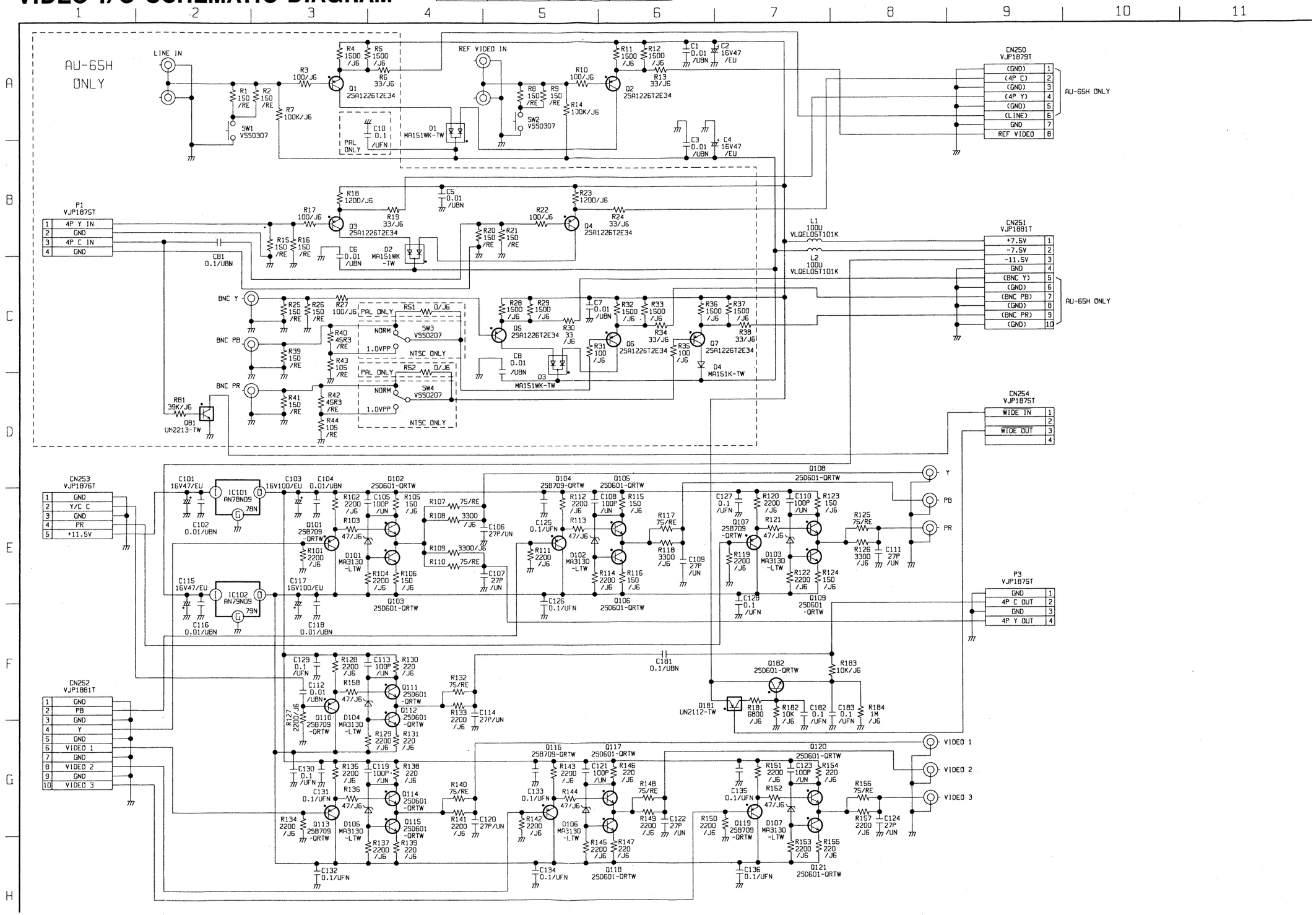

TYPE \ MODEL	AU-65H	AU-63H	AU-62H
NTSC	VEP84094G	VEP84094C	VEP84094C
PAL	VEP84094G	VEP84094C	VEP84094C

AUDIO I/O SCHEMATIC DIAGRAM 1/2

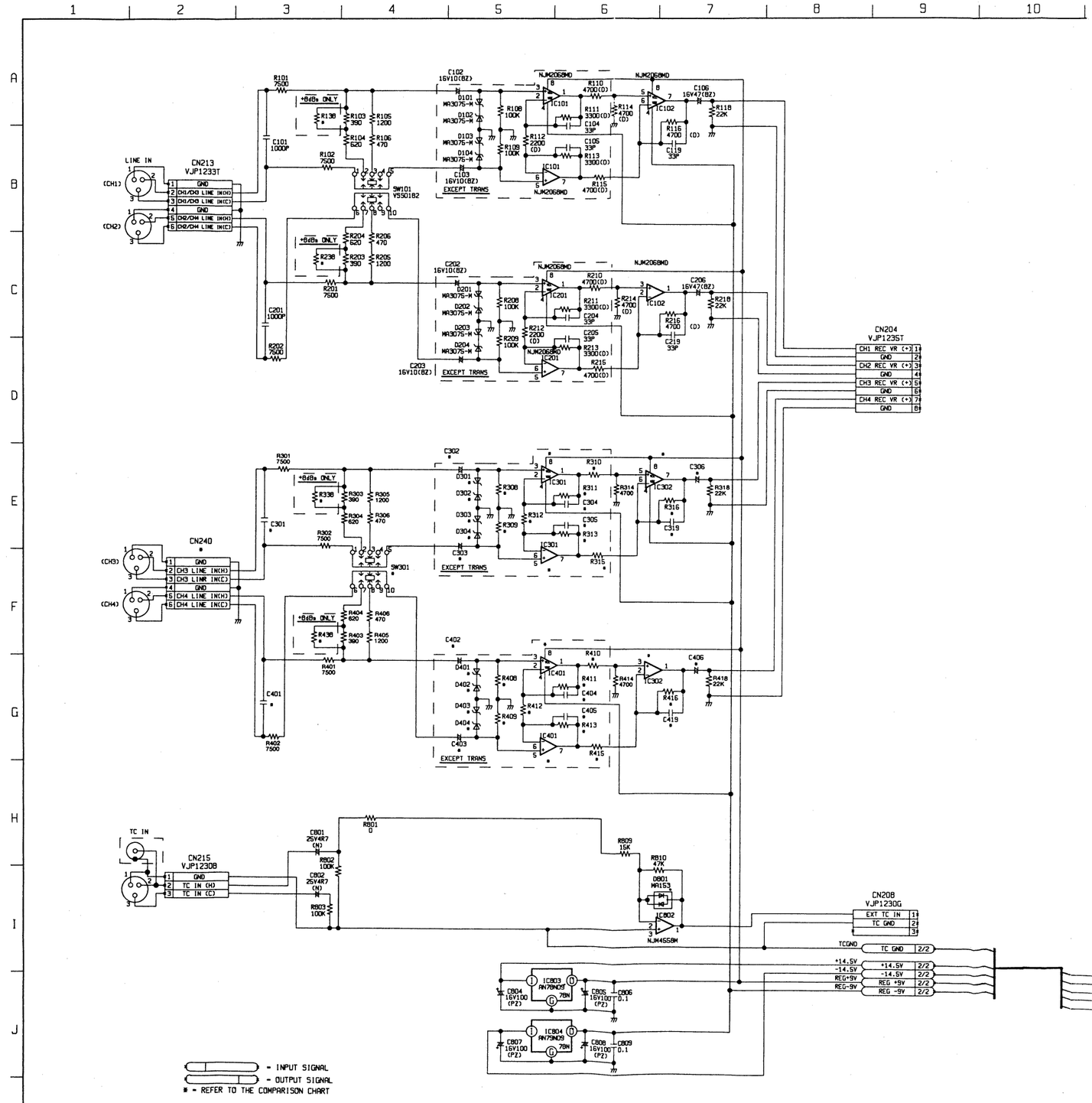

AUDIO I/O SCHEMATIC DIAGRAM 2/2

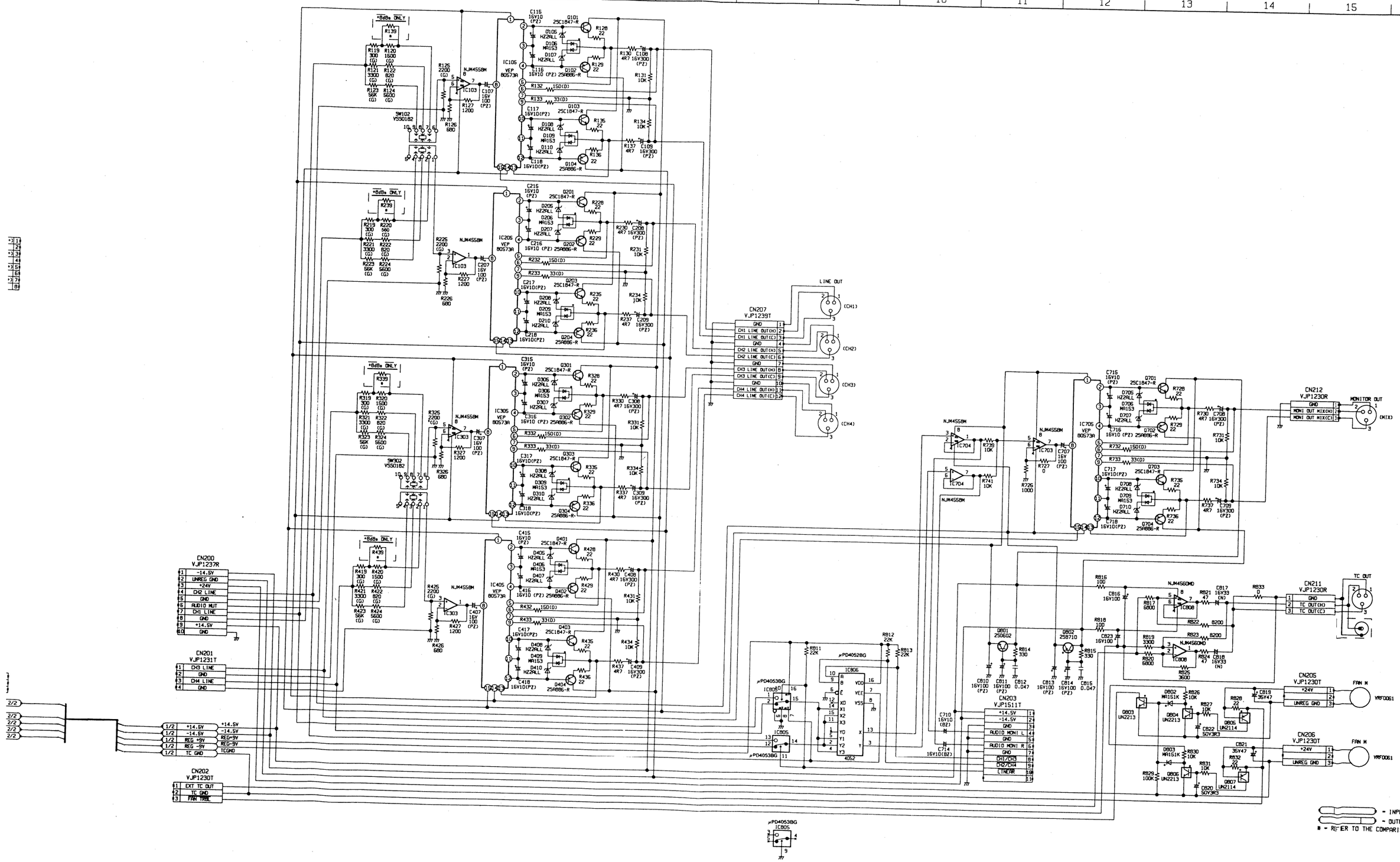

FRONT INTERFACE SCHEMATIC DIAGRAM

TYPE \ MODEL	AU-65H	AU-63H	AU-62H
NTSC	VEP80553D	VEP80553C	VEP80553B
PAL	VEP80631D	VEP80631B	VEP80631C

FRONT INTERFACE SCHEMATIC DIAGRAM (FOR NTSC)

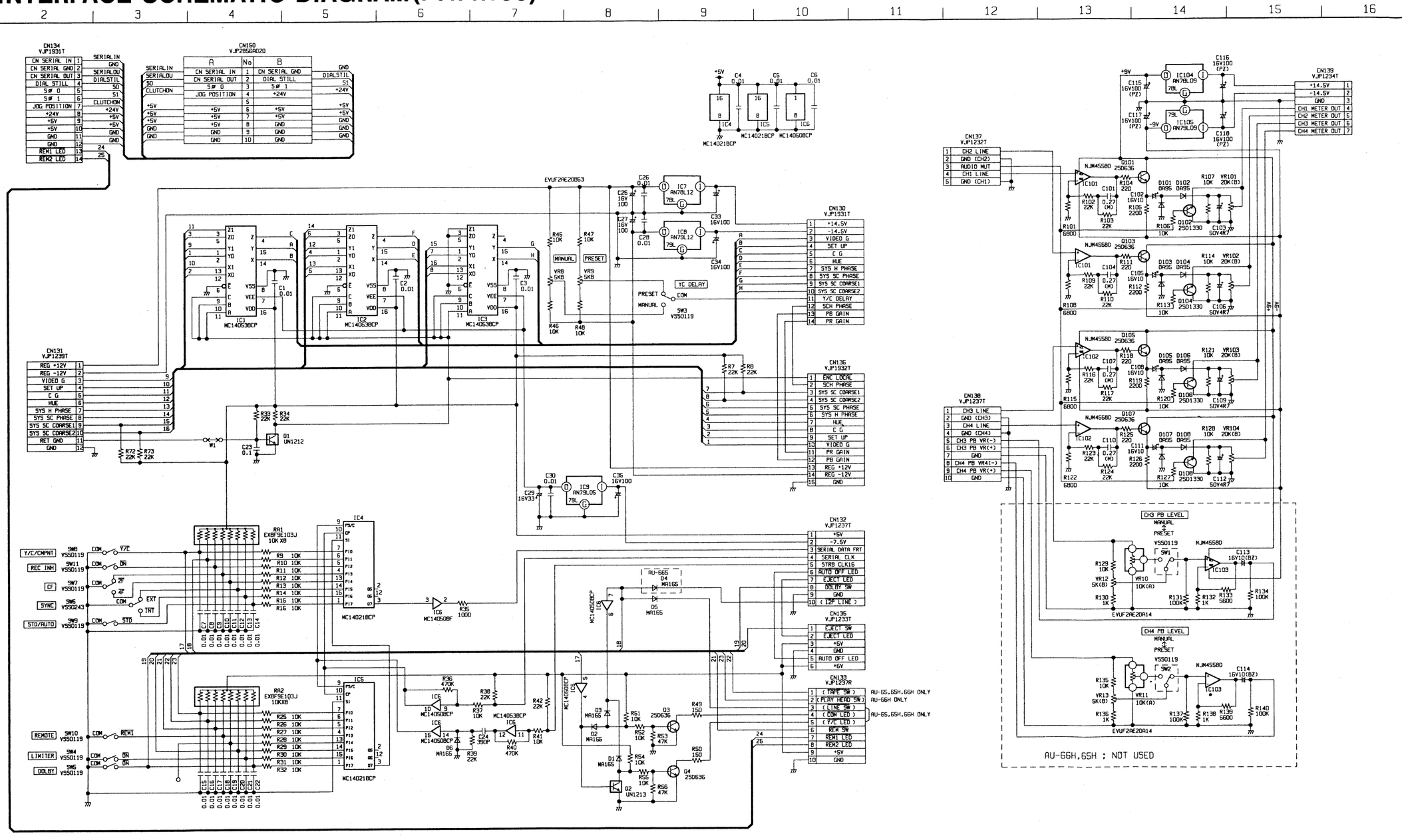

	AU-65 AU-65H AU-66H	AU-63 AU-63H	AU-62 AU-62H
C12	0.01	0	0
C16	0.01	0	0.01
C16	0.01	0	0
D5	MA165	——	——

REVERSE SIDE **AUDIO I/O SCHEMATIC DIAGRAM**

TYPE \ MODEL	AU-65H	AU-63H	AU-62H
NTSC	VEP80553D	VEP80553C	VEP80553B
PAL	VEP80631D	VEP80631B	VEP80631C

FRONT INTERFACE SCHEMATIC DIAGRAM (FOR PAL)

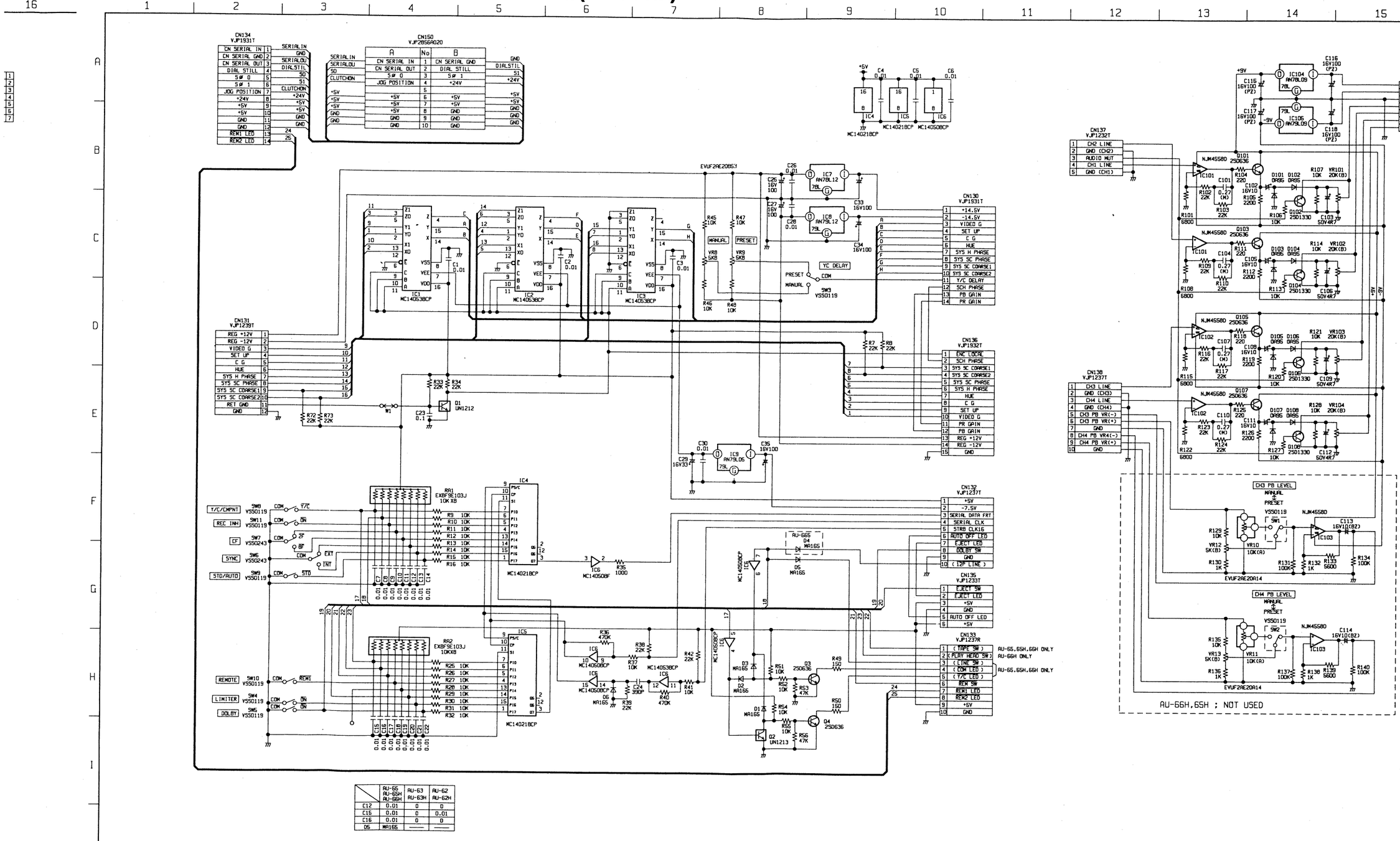

	AU-65 AU-65H AU-66H	AU-63 AU-63H	AU-62 AU-62H
C12	0.01	0	0
C16	0.01	0	0.01
C16	0.01	0	0
D5	MA165	——	——

TYPE \ MODEL	AU-65H	AU-63H	AU-62H
NTSC	VEP86107A	VEP86086A	VEP86086A
PAL	VEP86107B	VEP86086A	VEP86086A

FRONT PANEL A SCHEMATIC DIAGRAM 1/2

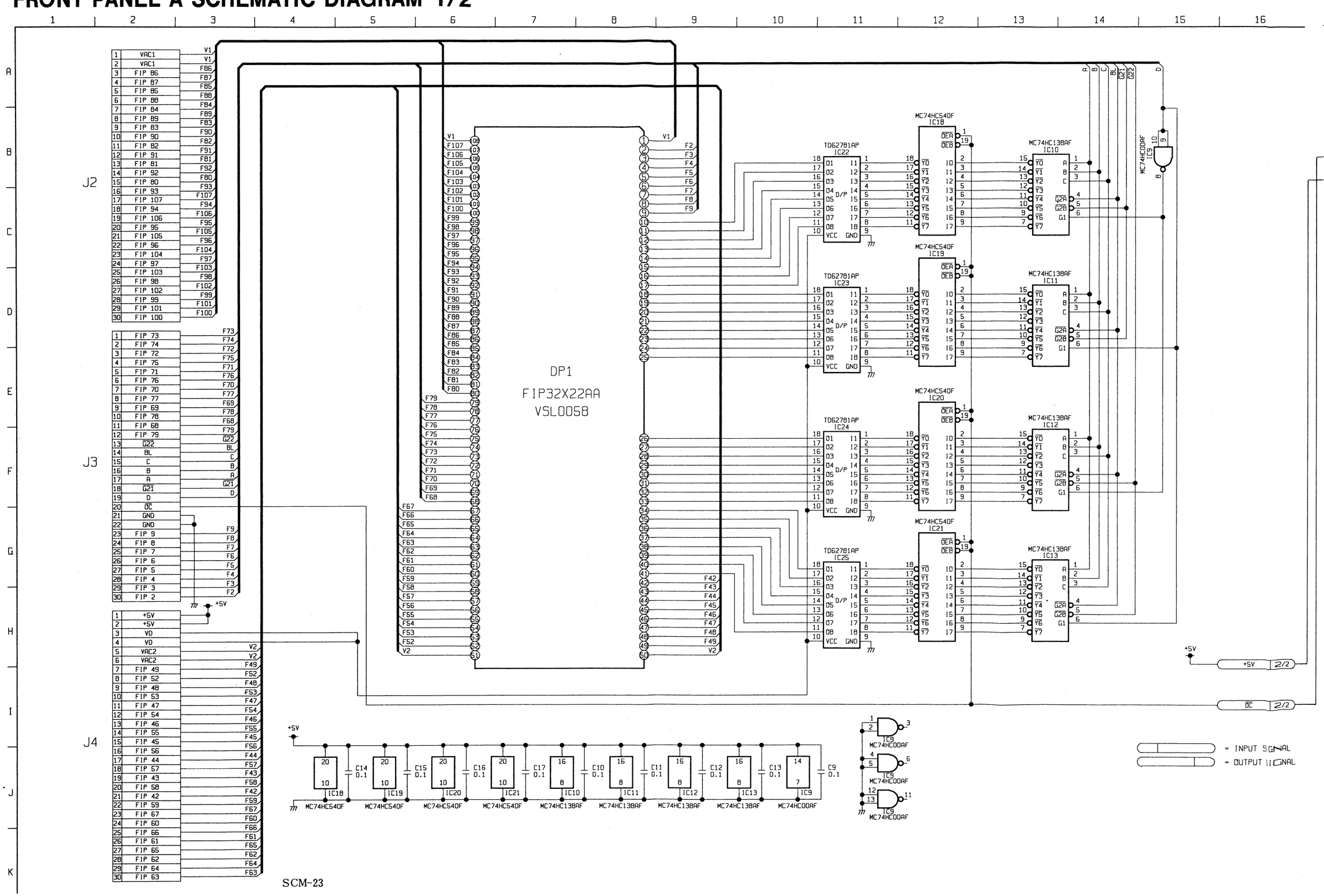

FRONT PANEL A SCHEMATIC DIAGRAM 2/2

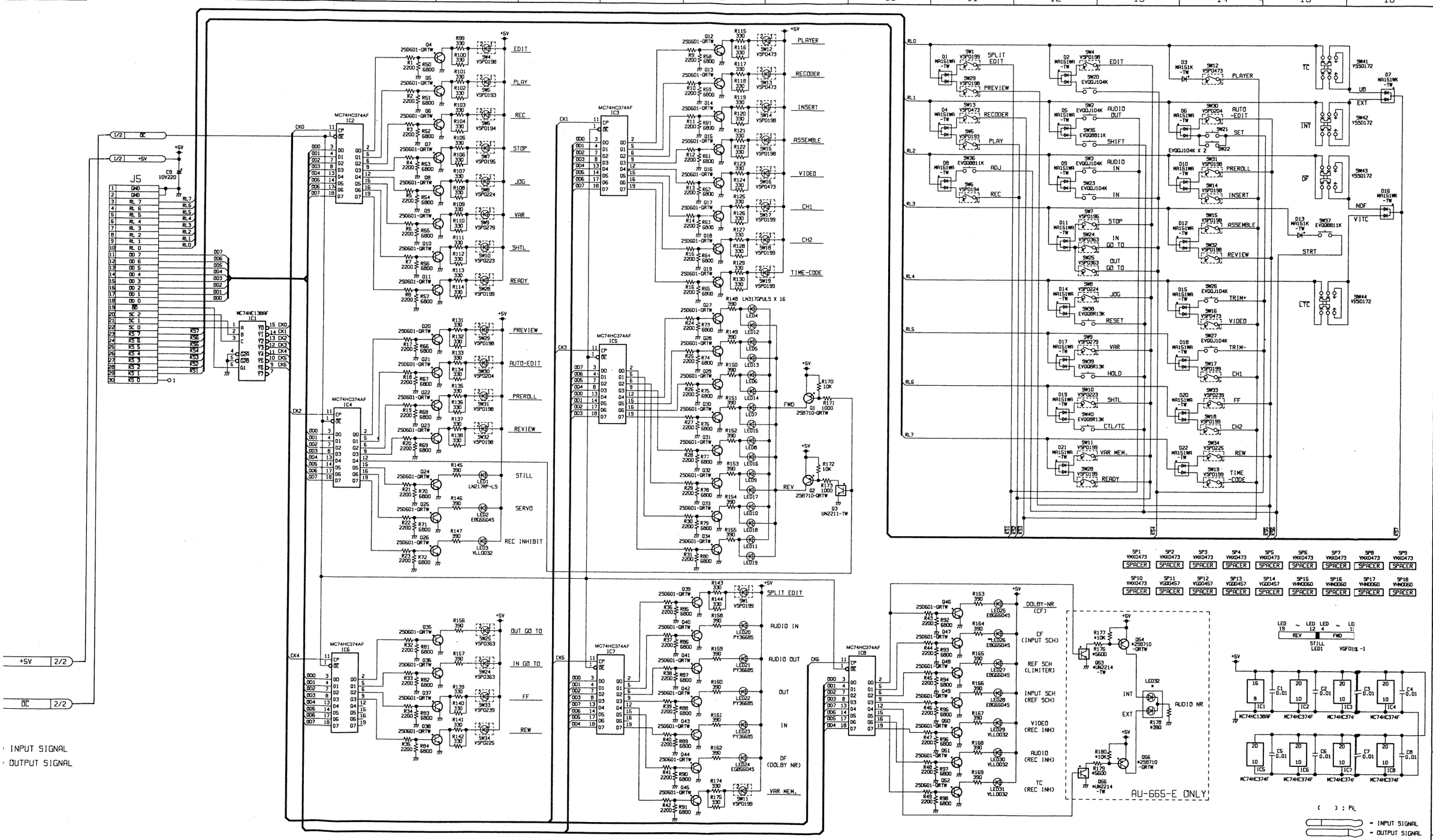

FRONT PANEL B
SCHEMATIC DIAGRAM

MODEL / TYPE	AU-65H	AU-63H	AU-62H
NTSC	VEP86108C	VEP86076E	VEP86076E
PAL	VEP86108D	VEP86076F	VEP86076F

FRONT PANEL B SCHEMATIC DIAGRAM 1/2

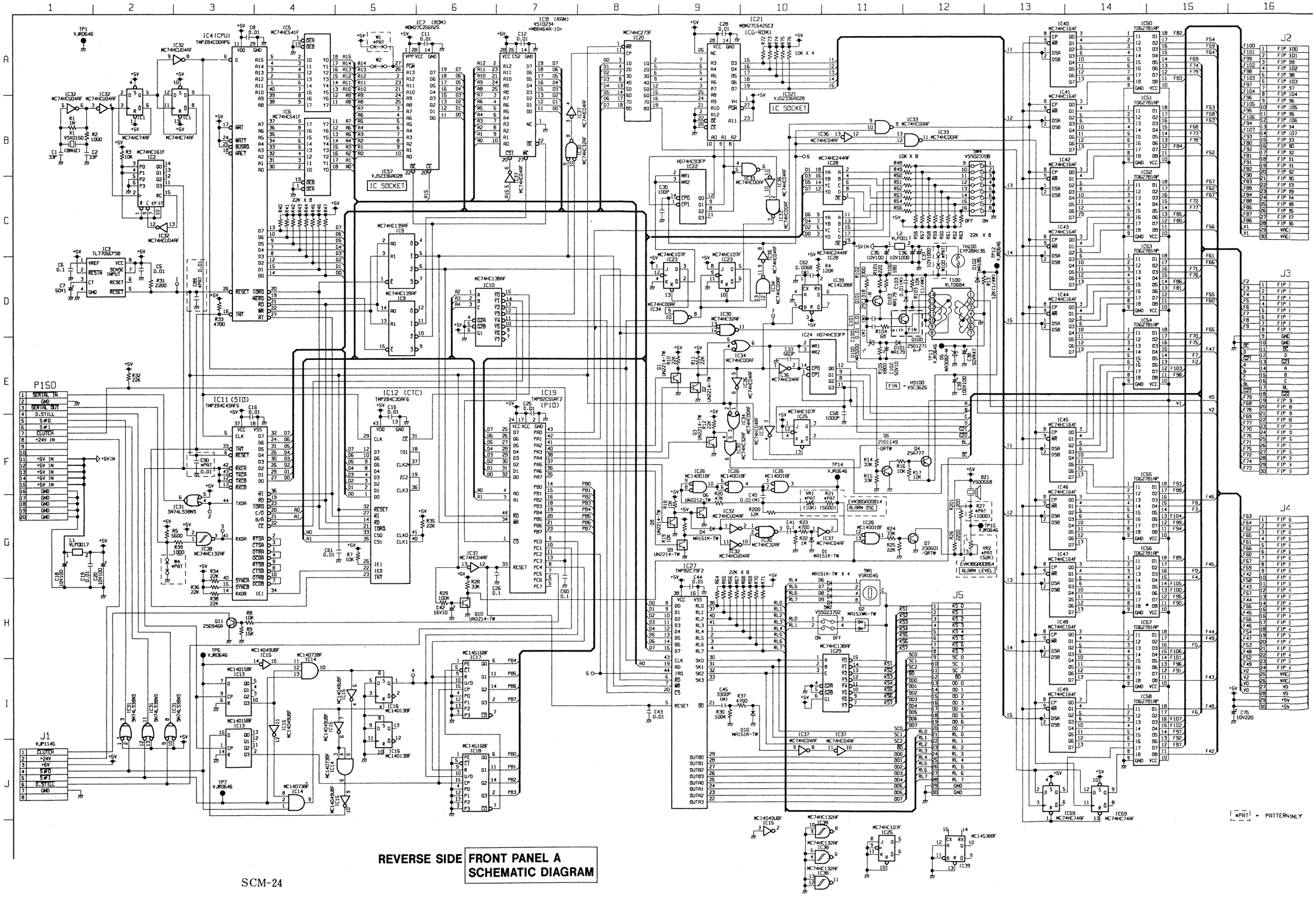

FRONT PANEL B SCHEMATIC DIAGRAM 2/2

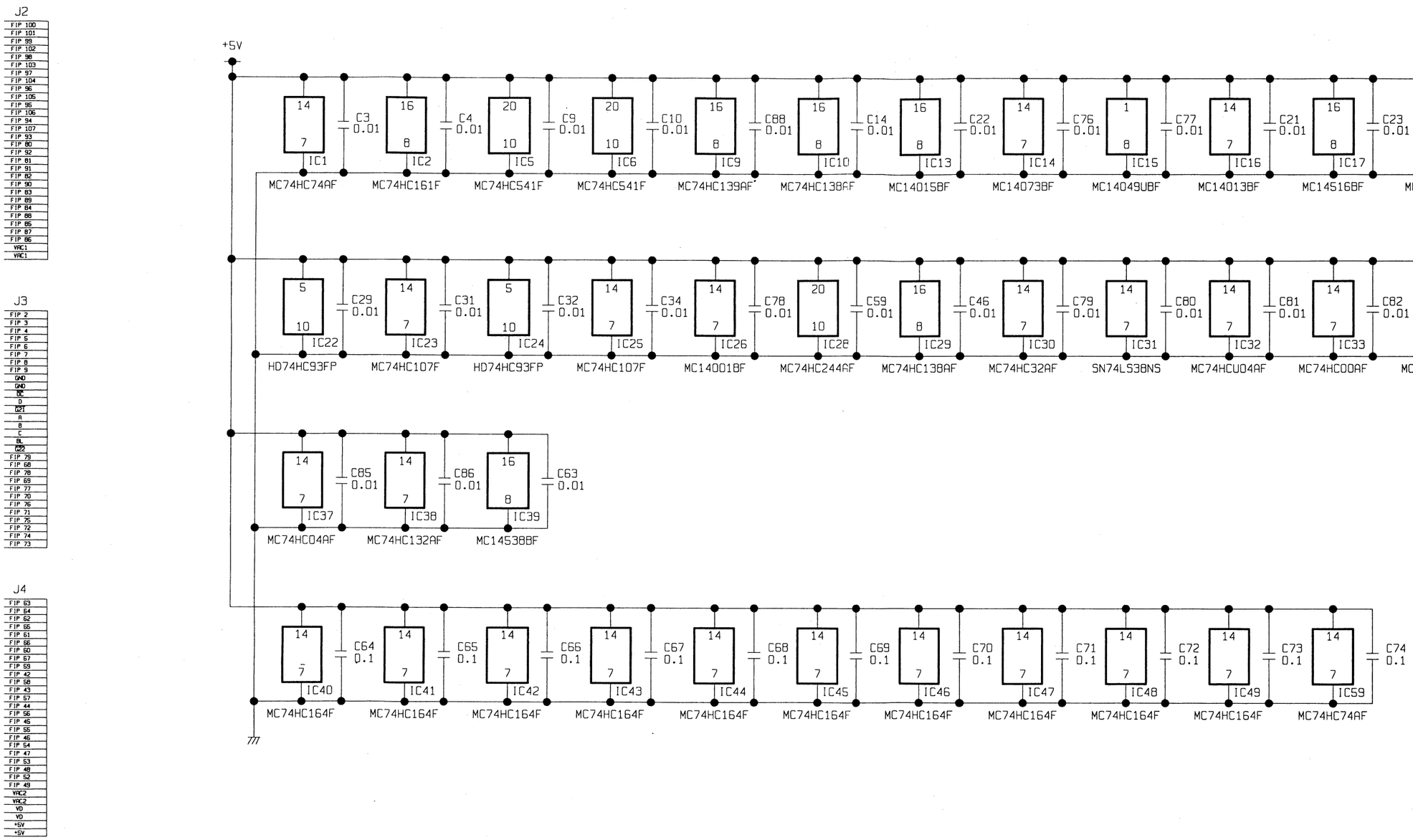

W0(MOTHER 1) P.C.BOARD

TYPE \ MODEL	AU-65H	AU-63H	AU-62H
NTSC	VEP80765A	VEP80765C	VEP80765B
PAL	VEP80765A	VEP80765C	VEP80765B

MOTHER
P. C. BOARD

COMPONENT SIDE			
CONNECTOR			
CN8	J-4	CN41	I-1
CN9	I-5	CN42	K-1
CN12	E-3	CN46	A-4
CN13	D-3	CN48	I-3
CN14	C-4	CN49	A-3
CN15	C-3	CN300	J-3
CN17	J-4	CN301	J-3
CN20	D-5	CN303	M-4
CN21	B-5	CN304	F-3
CN22	C-4	CN320	K-3
CN23	J-4	CN321	I-3
CN24	K-5	CN400	J-5
CN25	K-4	CN401	K-5
CN26	E-4	CN402	B-4
CN28	E-4	CN500	B-2
CN30	I-3	CN600	I-4
CN31	I-5	CN601	E-1
CN34	M-4	CN602	C-1
CN35	M-3		
CN36	E-3		
CN39	I-2		
CN40	A-2		

P.C. Board Location

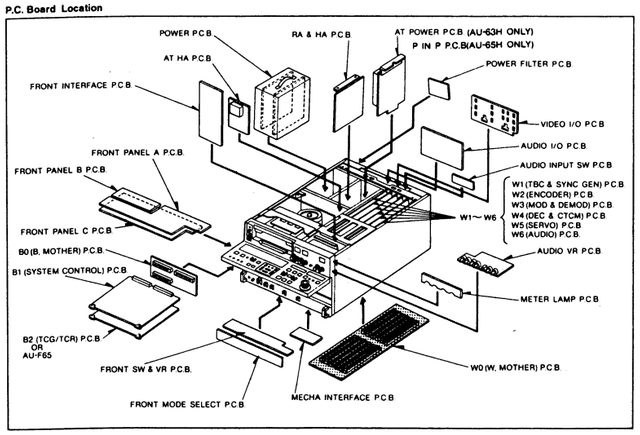

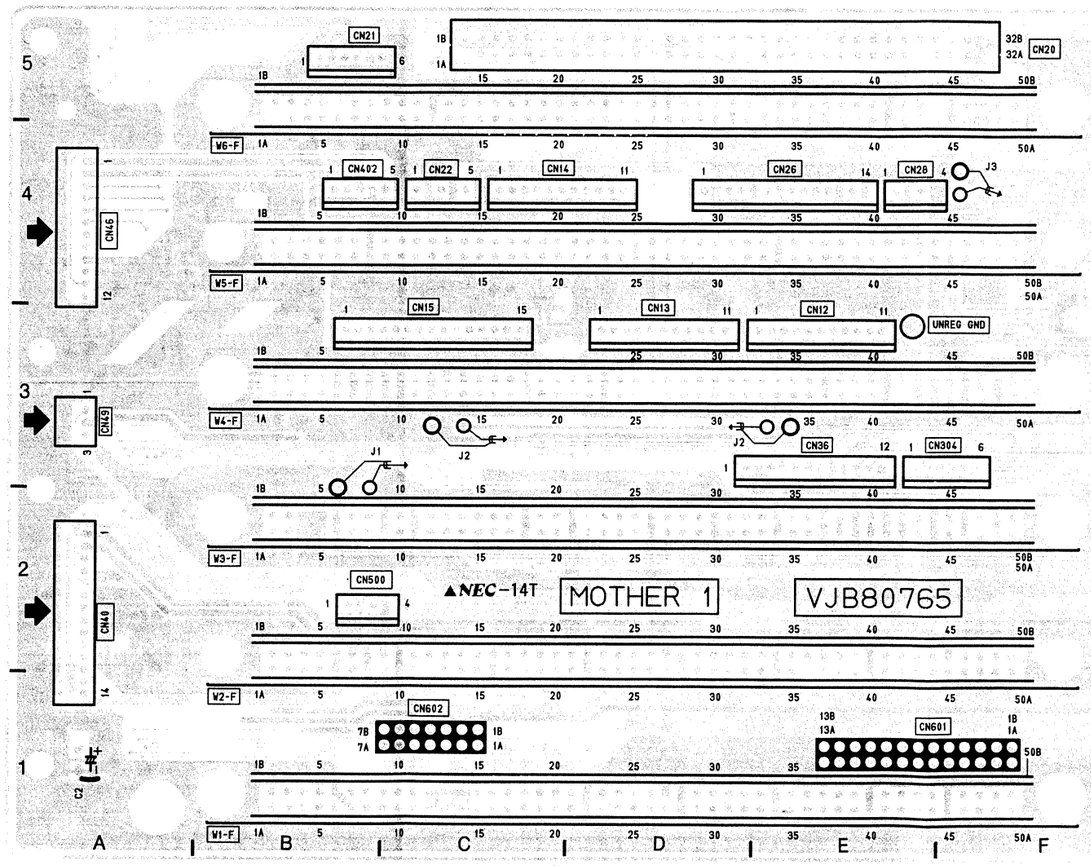

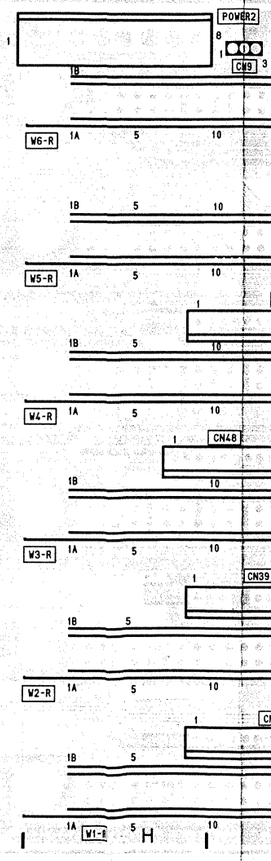

CHIP PART INFORMATION

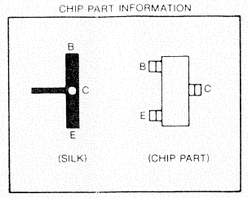

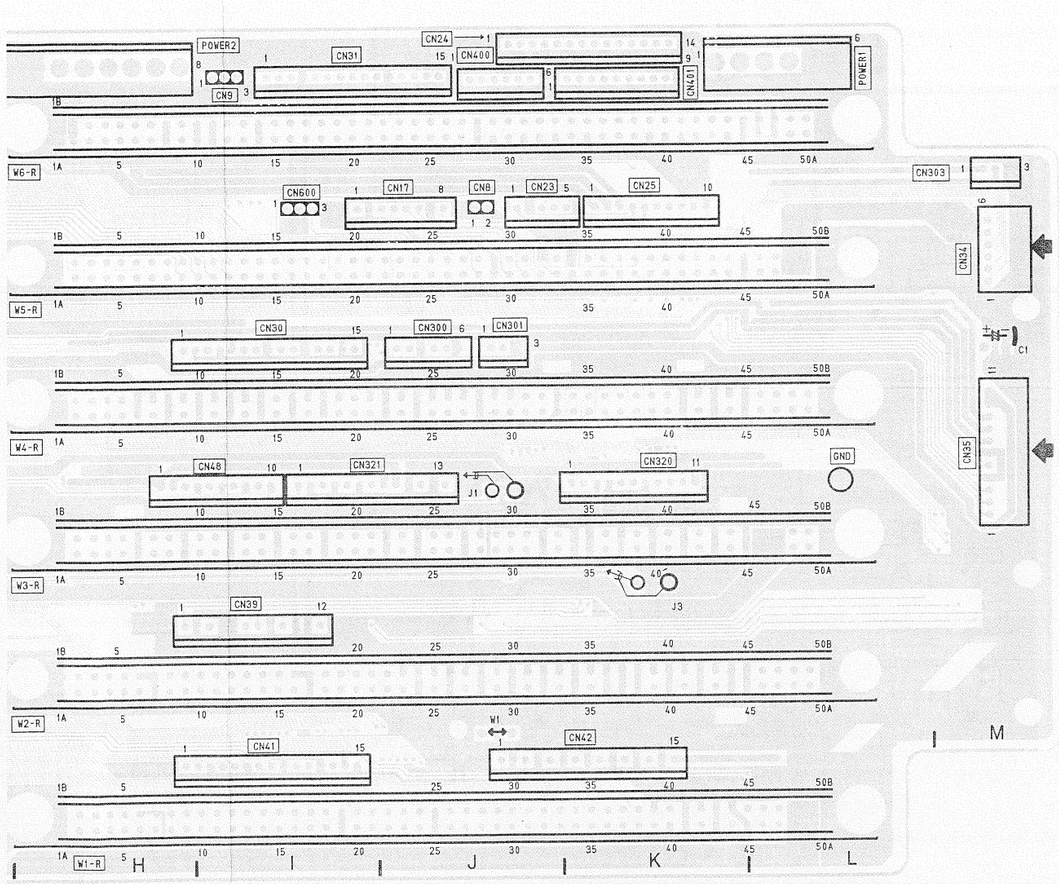

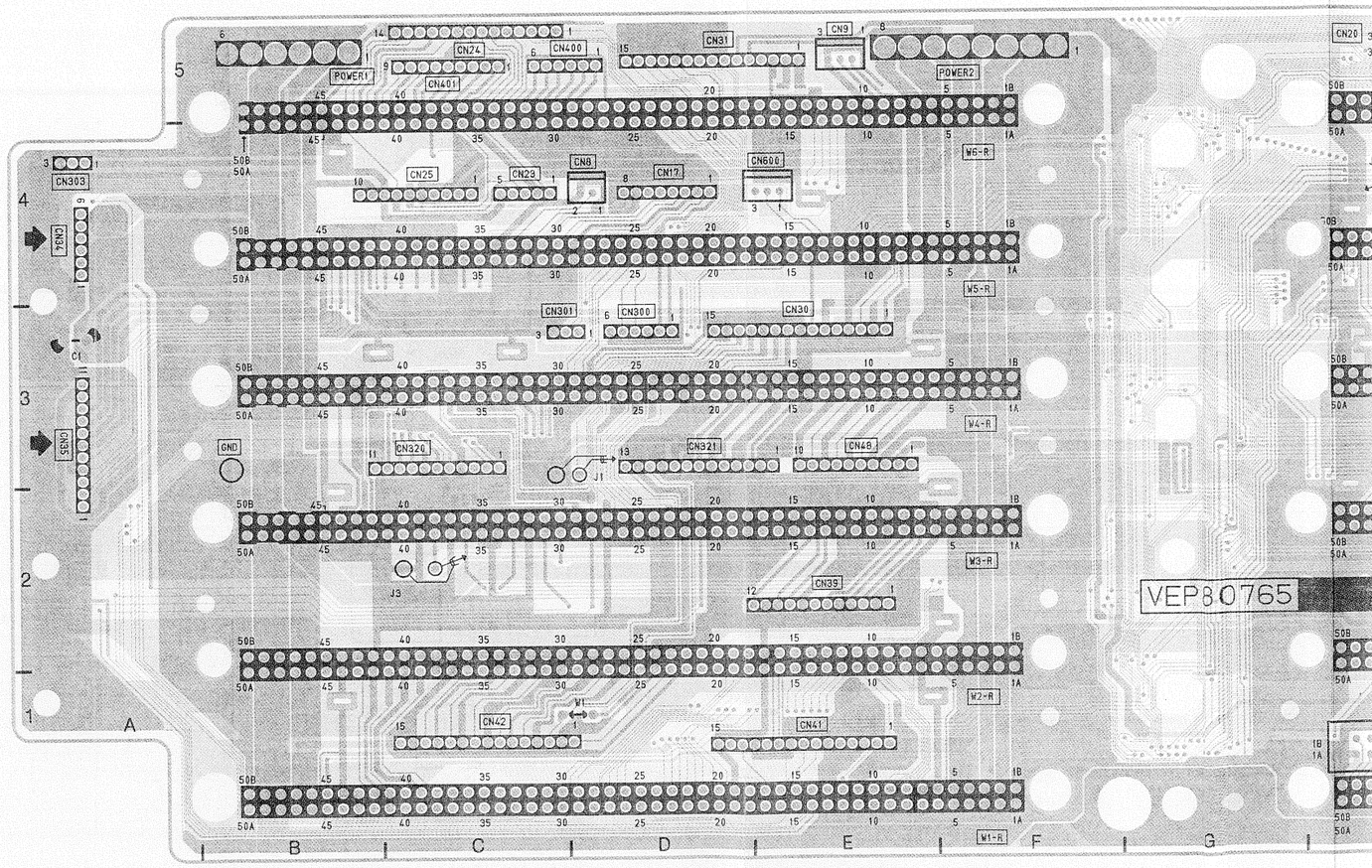

(COMPONENT SIDE)

CHIP PART INFORMATION

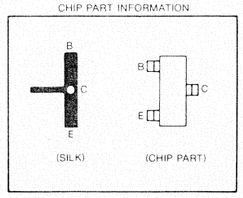

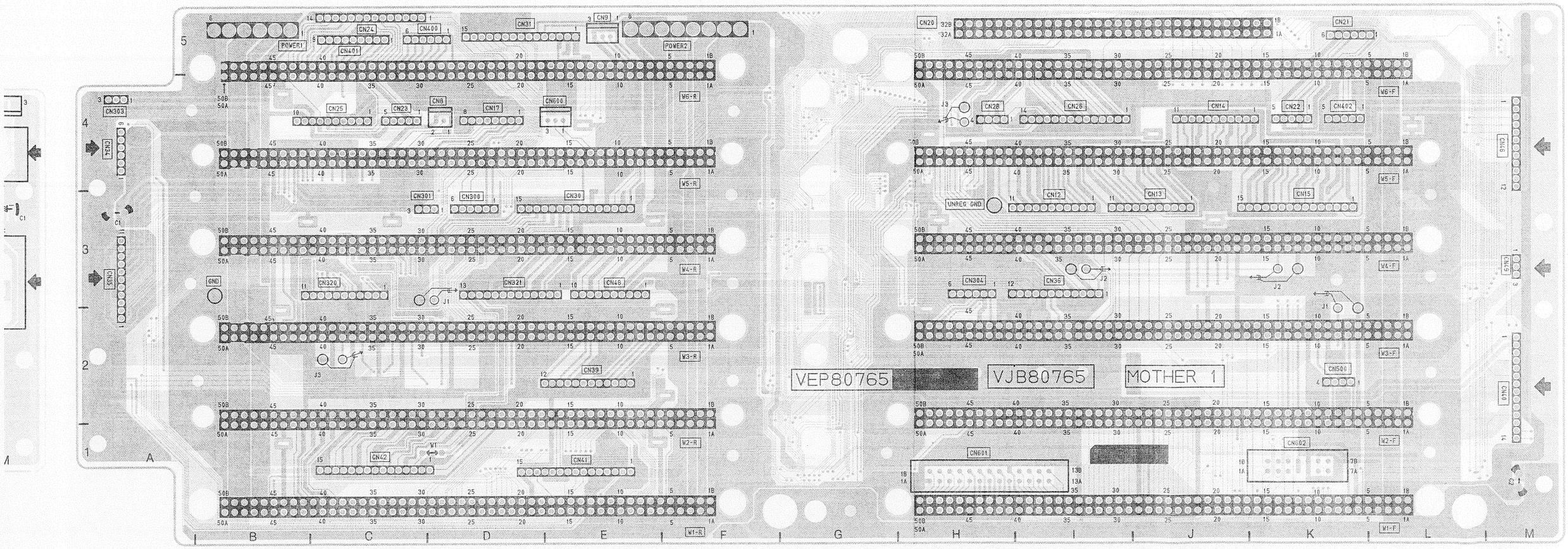

REVERSE SIDE

W1 TBC & SYNC GEN P.C.BOARD

W1(TBC & SYNC GEN) P.C.BOARD

TYPE \ MODEL	AU-65H	AU-63H	AU-62H
NTSC	VEP88091A	VEP88091A	VEP88091A
PAL	VEP88091C	VEP88091C	VEP88091C

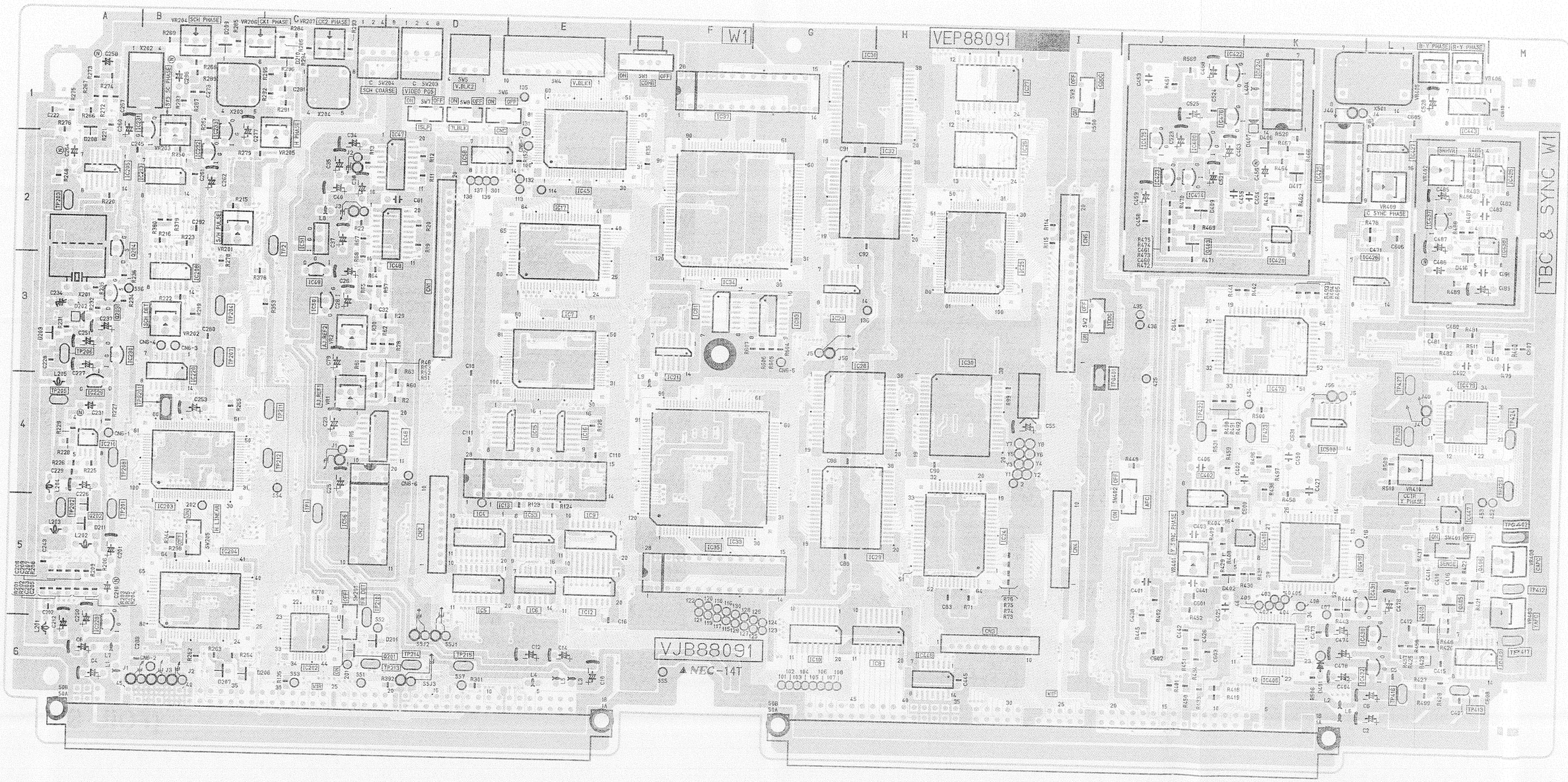

(COMPONENT SIDE)

CHIP PART INFORMATION

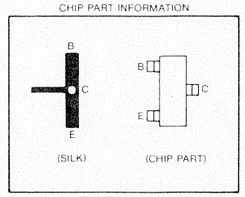

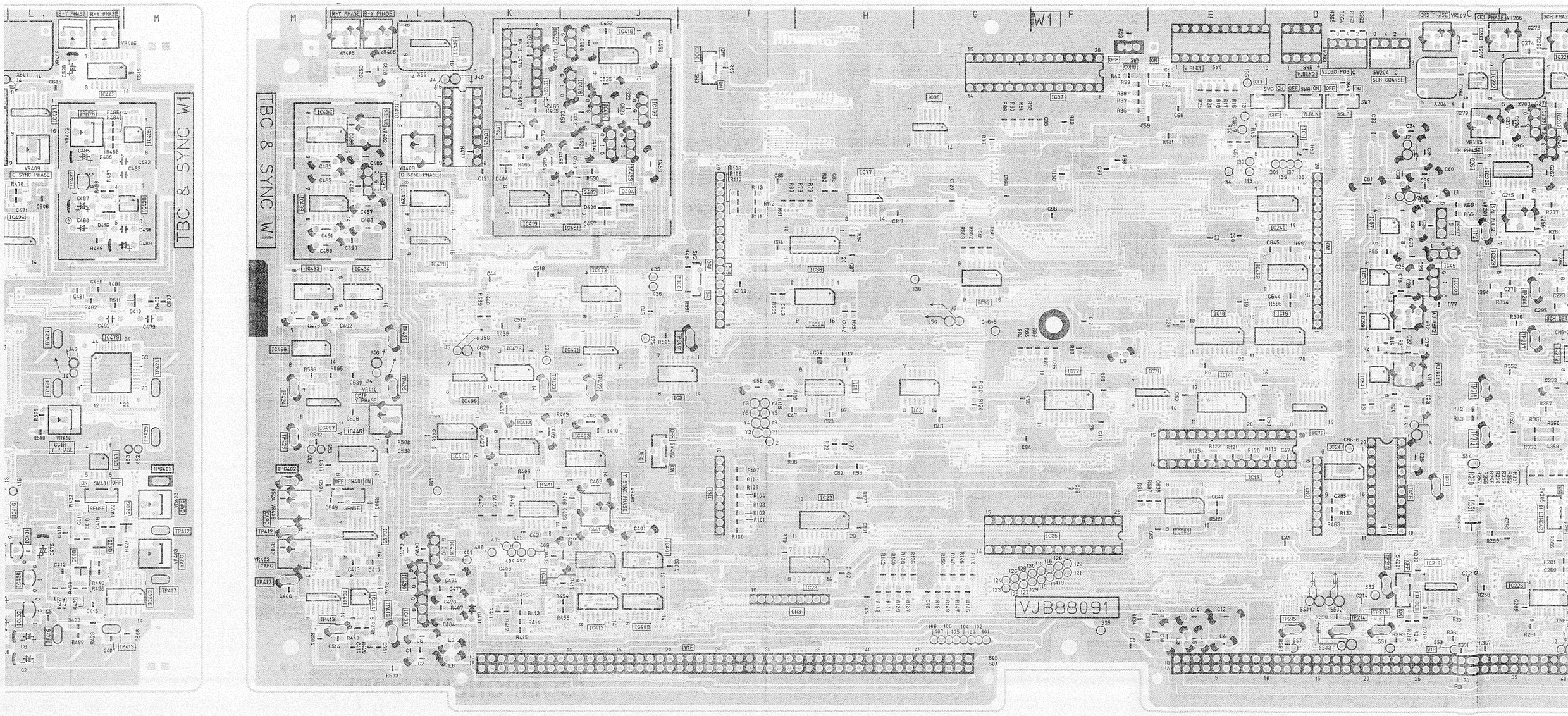

MPONENT SIDE)

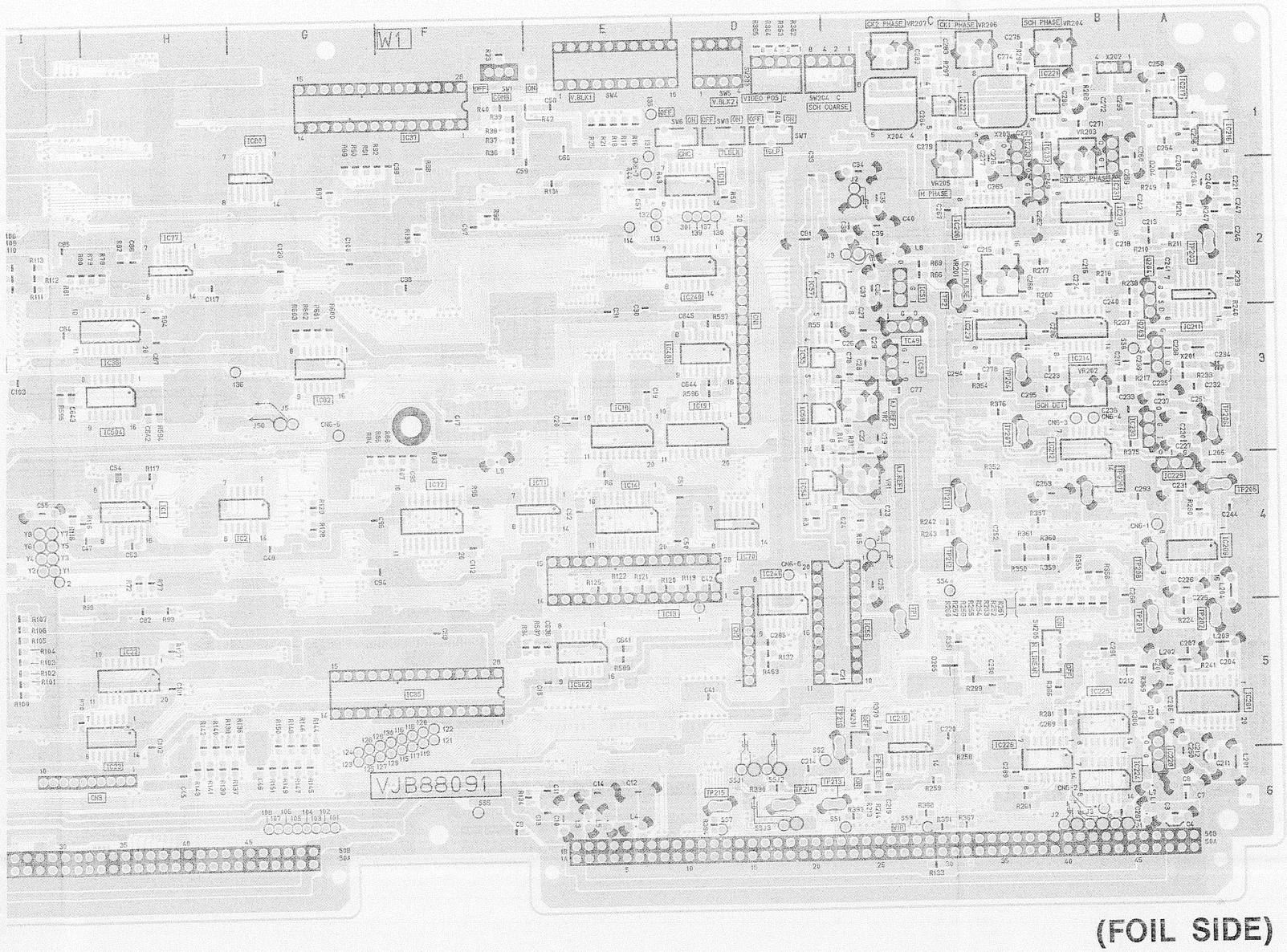

(FOIL SIDE)

P.C. Board Location

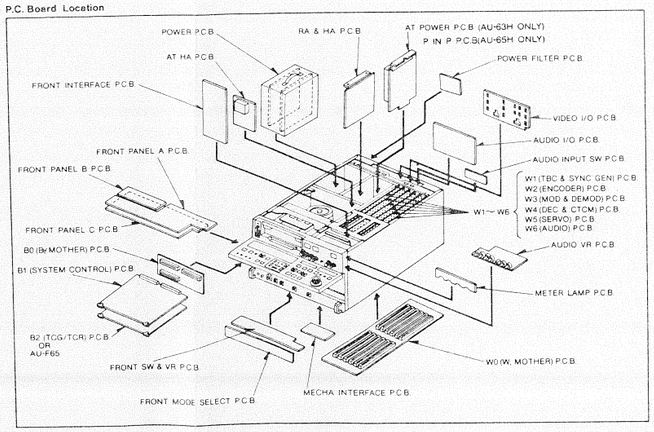

TBC & SYNC P.C.BOARD

COMPONENT SIDE

TRANSISTOR	
Q201	C-6
Q202	A-5
Q203	A-3
Q204	A-2
Q403	J-2
Q405	L-5
Q406	M-5
Q408	L-5

INTEGRATED CIRCUIT	
IC4	D-5
IC5	D-5
IC6	E-5
IC7	E-3
IC8	H-6
IC9	E-5
IC10	G-6
IC12	E-5
IC13	E-4
IC15	E-4
IC16	E-4
IC17	E-2
IC20	G-3
IC21	F-3
IC24	H-5
IC25	H-2
IC26	H-1
IC27	H-1
IC28	G-4
IC29	G-4
IC30	H-4
IC31	G-1
IC32	G-2
IC33	F-4
IC34	F-2
IC35	F-5
IC37	F-1
IC45	E-2
IC46	D-4
IC47	D-2
IC48	D-2
IC49	C-3
IC50	C-3
IC51	C-2
IC53	E-5
IC56	C-5
IC58	D-2
IC81	F-3
IC83	G-3
IC202	C-6
IC203	B-4
IC204	B-5
IC205	A-2
IC208	B-3
IC210	A-4
IC213	B-2
IC220	B-3
IC228	A-6
IC229	A-4
IC230	A-3
IC231	B-1
IC232	B-2
IC233	B-1
IC402	J-4
IC405	K-6
IC410	K-5
IC416	K-5
IC420	K-2
IC422	J-1
IC423	J-2
IC424	K-1
IC425	K-2
IC426	L-2
IC427	L-1
IC430	L-5
IC431	L-5
IC432	L-6
IC435	M-2
IC437	L-2
IC438	M-2
IC442	M-6
IC443	L-1
IC447	L-4
IC448	H-6
IC470	K-3
IC474	J-2
IC475	J-1
IC476	J-1
IC479	L-4
IC480	J-1
IC500	K-4

TESTR POINT	
TP1	C-5
TP2	C-2
TP201	A-5
TP202	A-5
TP203	A-2
TP204	B-3
TP205	A-4
TP206	A-3
TP207	B-3
TP208	A-4
TP210	C-5
TP211	C-4
TP212	C-4
TP213	D-6
TP214	D-6
TP215	D-6
TP412	M-5
TP413	L-6
TP416	L-6
TP417	M-5
TP422	J-4
TP423	K-4
TP424	M-4
TP425	M-4
TP426	L-4
TP427	L-3
TPG201	B-4
TPG401	I-3
TPG402	M-5

ADJUSTMENT	
VR1	C-4
VR2	C-3
VR201	B-2
VR202	B-3
VR203	B-2
VR204	B-1
VR205	C-2
VR206	B-1
VR207	C-1
VR401	J-5
VR402	L-2
VR403	M-5
VR405	L-1
VR406	L-1
VR408	M-5
VR409	L-2
VR410	L-4

CONNECTOR	
CN1	D-3
CN2	D-5
CN3	I-6
CN4	I-5
CN5	I-2

FOIL SIDE

TRANSISTOR	
Q402	J-2
Q404	J-2

INTEGRATED CIRCUIT	
IC1	H-4
IC2	G-4
IC3	I-4
IC11	D-2
IC14	E-4
IC18	E-3
IC19	D-3
IC22	H-5
IC23	H-5
IC36	H-3
IC54	D-4
IC55	D-3
IC57	C-2
IC59	D-3
IC70	D-4
IC71	E-4
IC72	F-4
IC77	H-2
IC80	G-2
IC82	G-3
IC201	A-5
IC206	B-2
IC207	B-2
IC209	A-4
IC211	A-2
IC212	B-3
IC214	B-3
IC216	A-1
IC217	A-1
IC218	C-5
IC221	B-1
IC222	C-1
IC223	B-3
IC224	B-6
IC225	B-5
IC226	B-6
IC240	D-2
IC241	D-4
IC401	J-5
IC403	J-4
IC404	K-4
IC409	J-6
IC411	K-5
IC412	J-6
IC413	K-4
IC415	J-5
IC418	J-1
IC419	K-2
IC421	K-2
IC428	L-3
IC429	L-2
IC433	M-3
IC434	L-3
IC436	M-2
IC439	M-2
IC441	L-6
IC444	L-6
IC445	L-5
IC446	L-4
IC471	J-3
IC472	L-3
IC473	K-4
IC477	L-1
IC478	L-1
IC481	J-2
IC489	D-3
IC497	M-4
IC498	M-3
IC499	K-4
IC502	E-5
IC504	H-3

W2 (ENCODER)

COMPONENT SIDE

Transistors

Q1	L-4
Q7	I-4
Q9	I-4
Q10	J-6
Q11	I-4
Q14	L-6
Q20	L-5
Q21	J-6
Q22	L-5
Q26	K-4
Q28	M-4
Q200	A-3
Q203	A-2
Q204	A-2
Q205	A-2
Q207	A-1
Q212	B-1
Q219	A-4
Q223	A-4
Q224	B-4
Q234	B-3
Q237	B-3
Q241	A-5
Q242	B-5
Q252	B-5
Q255	B-5
Q262	F-1
Q263	F-1
Q265	E-1
Q266	B-6
Q285	D-2
Q288	A-3
Q289	C-4
Q291	A-5
Q501	A-2
Q503	A-2
Q504	B-2
Q507	C-2
Q514	E-2
Q515	E-2
Q519	D-4
Q522	C-5
Q523	C-5
Q524	C-5
Q535	F-3
Q536	F-3
Q538	E-4
Q539	E-4
Q540	E-4
Q541	E-4
Q544	E-4
Q546	D-2
Q550	E-4
Q803	K-1
Q807	J-1
Q812	H-1
Q813	H-2
Q814	H-1
Q815	H-1

Integrated Circuits

IC1	M-4
IC2	I-3
IC4	I-4
IC7	H-5
IC8	I-6
IC10	L-5
IC13	K-5
IC14	I-6
IC15	M-6
IC16	J-6
IC17	L-6
IC18	J-6
IC19	G-6
IC26	L-3
IC27	L-3
IC28	K-3
IC29	K-3
IC30	J-3
IC32	I-3
IC33	I-3
IC200	B-2
IC201	B-2
IC202	C-4
IC203	C-3
IC204	C-5
IC205	C-5
IC207	B-1
IC208	C-4
IC209	B-4
IC210	B-5
IC211	G-6
IC216	G-1
IC217	F-2
IC502	C-1
IC503	E-1
IC505	D-4
IC506	F-1
IC507	F-5
IC508	F-4
IC509	F-2
IC512	E-3
IC513	G-4
IC516	E-3
IC517	C-3
IC518	C-3
IC519	F-6
IC520	G-6
IC521	E-3
IC522	E-2
IC823	E-5
IC800	J-1
IC802	H-2
IC803	H-1
IC804	L-1
IC805	I-1
IC807	L-2
IC809	K-2
IC810	J-2
IC811	J-2
IC813	I-2
IC814	I-1
IC817	I-2
IC818	M-2
IC819	I-3
IC820	J-3
IC821	J-3
IC822	M-2

Test Points

TP1	L-4
TP2	K-5
TP3	I-5
TP4	K-5
TP6	L-1
TP7	L-1
TP201	A-1
TP202	C-2
TP203	C-4
TP204	C-5
TP206	I-1
TP207	I-1
TP501	B-3
TP502	C-2
TP503	E-2
TP505	C-4
TP506	D-5
TP507	D-2
TP800	L-1
TP801	K-1
TP802	L-1
TP803	K-2
TP804	L-2
TP805	I-2

TP GND

TPG1	K-3
TPG2	I-5
TPG201	B-3
TPG501	E-2

Adjustments

VR1	K-4
VR2	K-4
VR3	M-5
VR4	K-5
VR200	B-1
VR201	B-1
VR202	B-1
VR203	B-4
VR204	B-4
VR205	B-5
VR206	B-6
VR207	B-3
VR208	B-5
VR209	B-5
VR210	G-1
VR211	A-3
VR212	C-4
VR213	A-5
VR501	B-2
VR502	B-3
VR503	C-1
VR504	E-1
VR505	D-1
VR506	E-1
VR507	C-5
VR508	C-5
VR509	D-5
VR510	F-5
VR511	E-5
VR512	J-1
VR513	F-3
VR514	F-3
VR515	F-4
VR516	E-4
VR517	J-1
VR800	K-1
VR801	K-1
VR802	L-2
VR803	J-2
VR805	K-2

Others

VC201	A-1
VC501	B-3
CN1	H-6
CN2	H-5
CN3	H-5
CN4	H-4
CN5	H-3

FOIL SIDE

Transistor

Q2	L-4
Q3	K-4
Q4	J-4
Q5	I-4
Q6	I-4
Q8	I-4
Q12	J-4
Q13	L-6
Q15	M-5
Q16	L-5
Q17	L-5
Q18	L-5
Q19	L-5
Q23	L-5
Q24	L-3
Q25	K-4
Q27	M-4
Q201	A-2
Q202	A-2
Q206	A-2
Q208	A-1
Q209	A-1
Q210	A-1
Q211	B-1
Q213	B-2
Q214	B-2
Q215	A-3
Q220	A-4
Q221	A-3
Q222	A-4
Q225	A-4
Q226	A-4
Q227	B-4
Q229	B-4
Q230	B-4
Q232	A-3
Q233	B-3
Q235	B-3
Q236	B-4
Q238	A-5
Q239	A-5
Q240	A-5
Q243	A-6
Q244	A-5
Q245	B-6
Q246	B-5
Q247	B-5
Q248	B-5
Q249	A-6
Q250	A-4
Q251	B-4
Q253	B-5
Q254	B-5
Q256	G-1
Q257	G-1
Q258	E-5
Q259	C-1
Q260	D-2
Q261	D-2
Q267	A-4
Q284	B-4
Q286	B-1
Q287	B-1
Q290	C-4
Q292	F-1
Q502	A-2
Q505	B-3
Q506	B-3
Q508	C-2
Q509	C-2
Q516	E-2
Q518	D-4
Q520	C-4
Q521	C-5
Q525	D-5
Q526	C-5
Q527	D-5
Q528	C-5
Q532	F-5
Q533	C-4
Q534	F-4
Q537	F-4
Q542	E-4
Q543	E-4
Q545	D-2
Q547	D-2
Q548	C-2
Q549	E-4
Q551	E-2
Q552	E-2
Q800	I-1
Q801	J-2
Q802	K-1
Q804	K-2
Q806	J-1
Q808	G-2
Q809	G-2
Q810	G-1
Q811	G-1
Q816	J-2
Q817	J-2
Q818	K-1
Q819	K-1

Integrated Circuits

IC3	J-4
IC5	J-4
IC6	I-5
IC9	K-5
IC11	L-5
IC12	K-5
IC206	A-2
IC215	C-3
IC501	B-3
IC504	D-4
IC510	G-5
IC511	E-5
IC514	G-5
IC524	E-5
IC801	K-1
IC806	L-2
IC808	L-2
IC812	J-2
IC815	K-2
IC816	I-2
IC823	M-2

W2(ENCODER) P.C.BOARD

TYPE \ MODEL	AU-65H	AU-63H	AU-62H
NTSC	VEP88063P	VEP88063G	VEP88063G
PAL	VEP88063M	VEP88063N	VEP88063Q

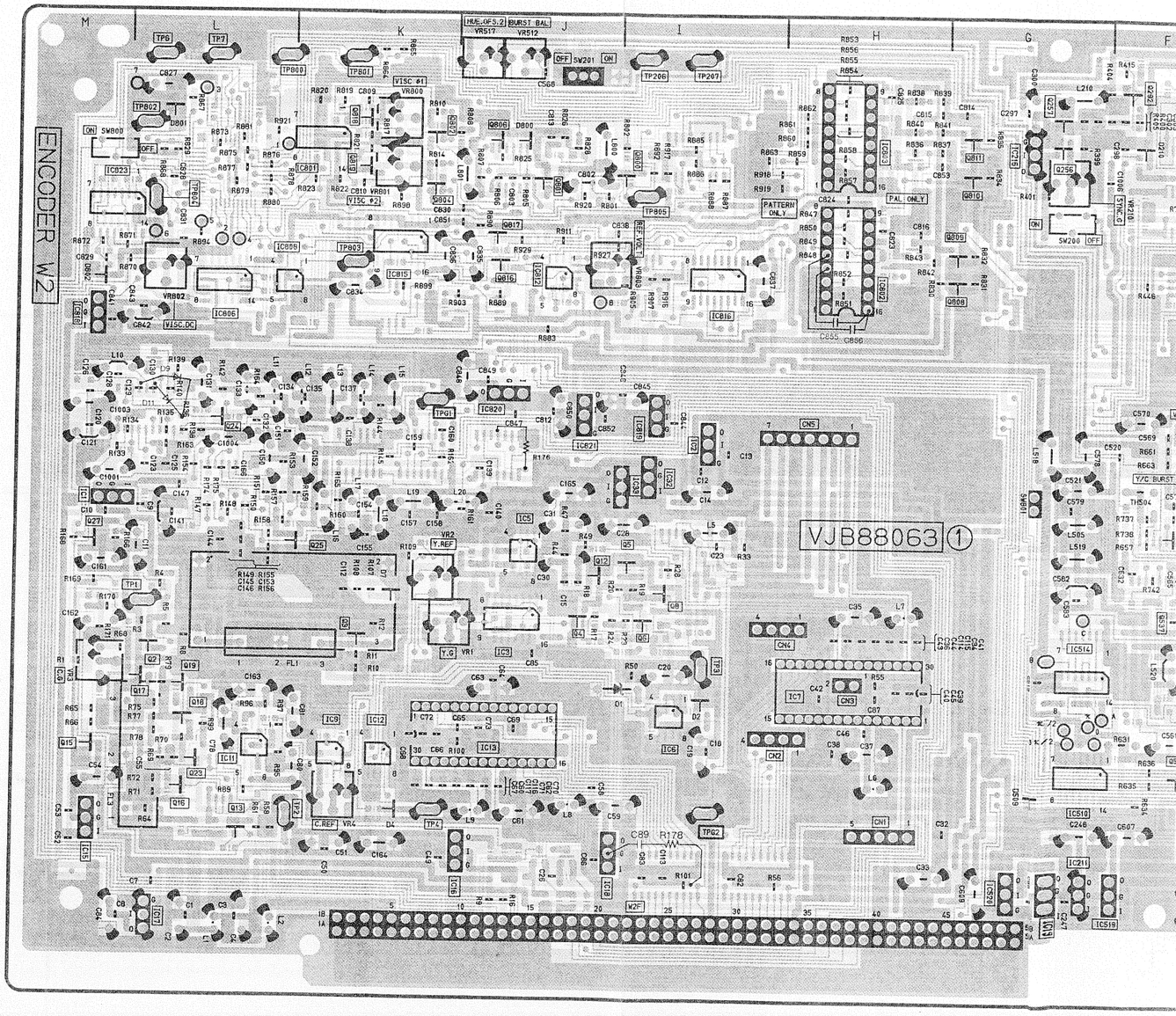

P.C. Board Location

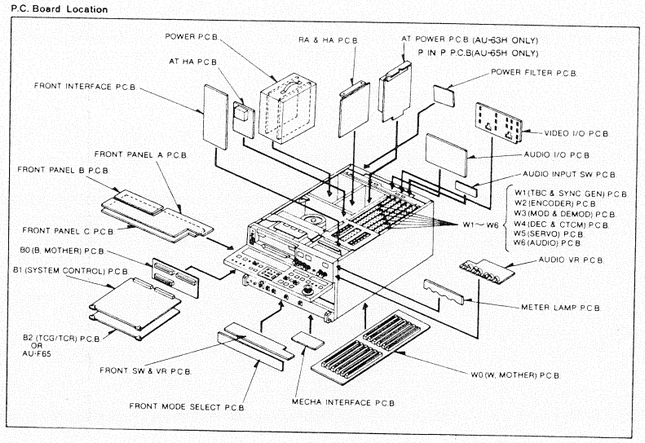

CHIP PART INFORMATION

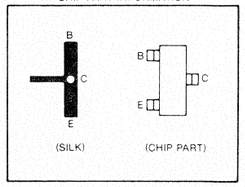

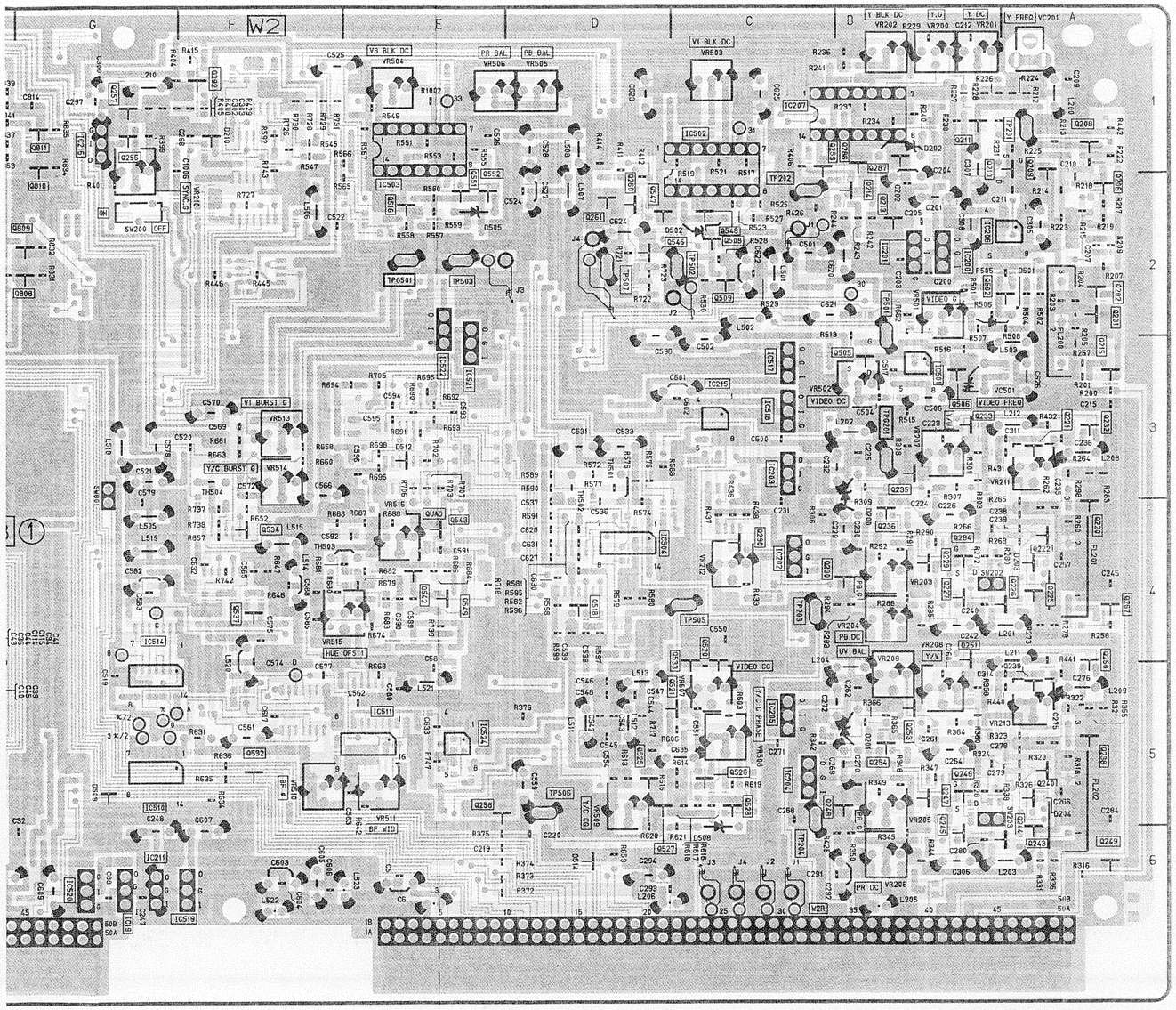

(FOIL SIDE)

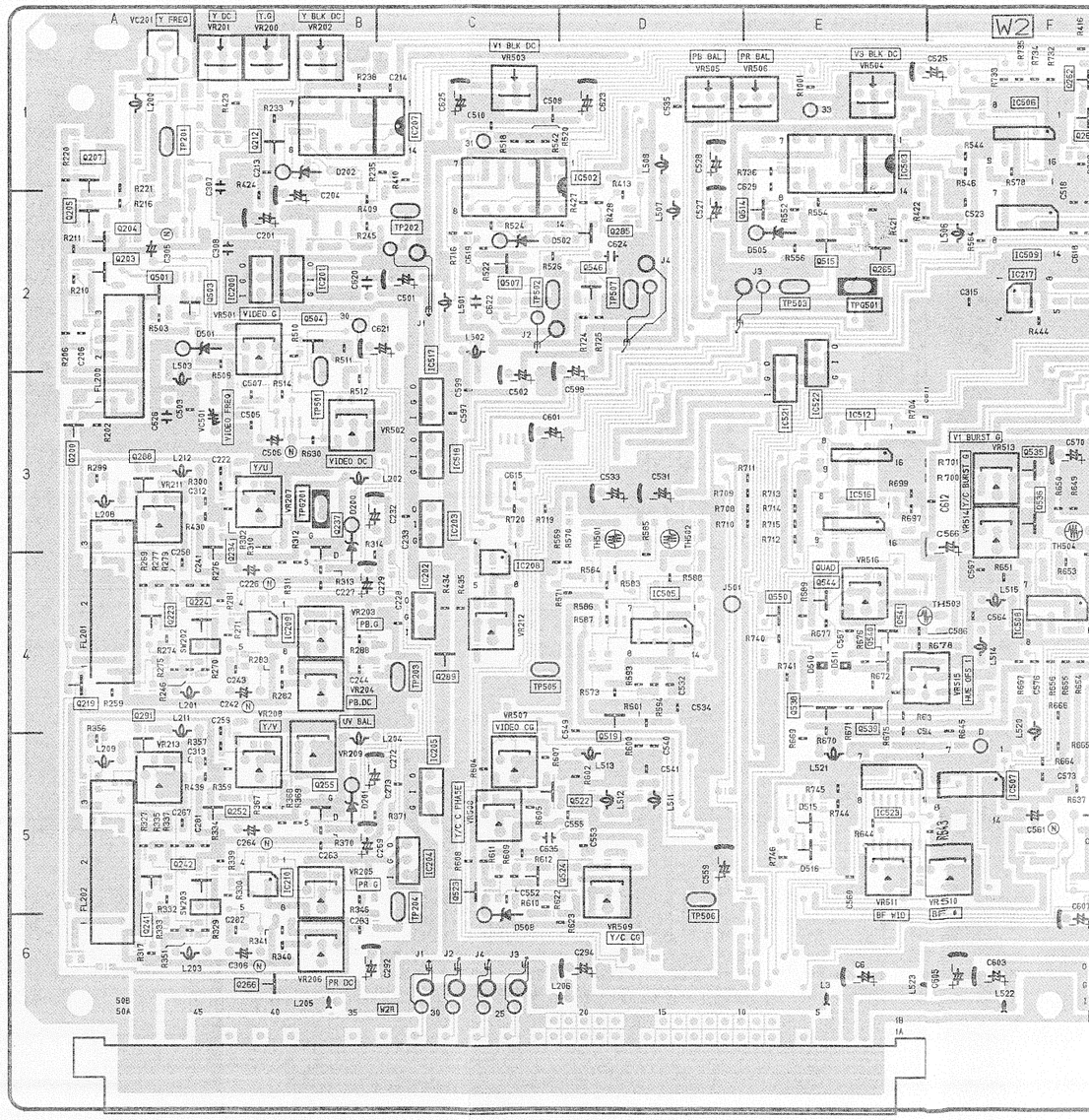

CHIP PART INFORMATION

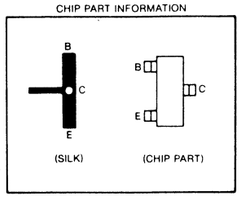

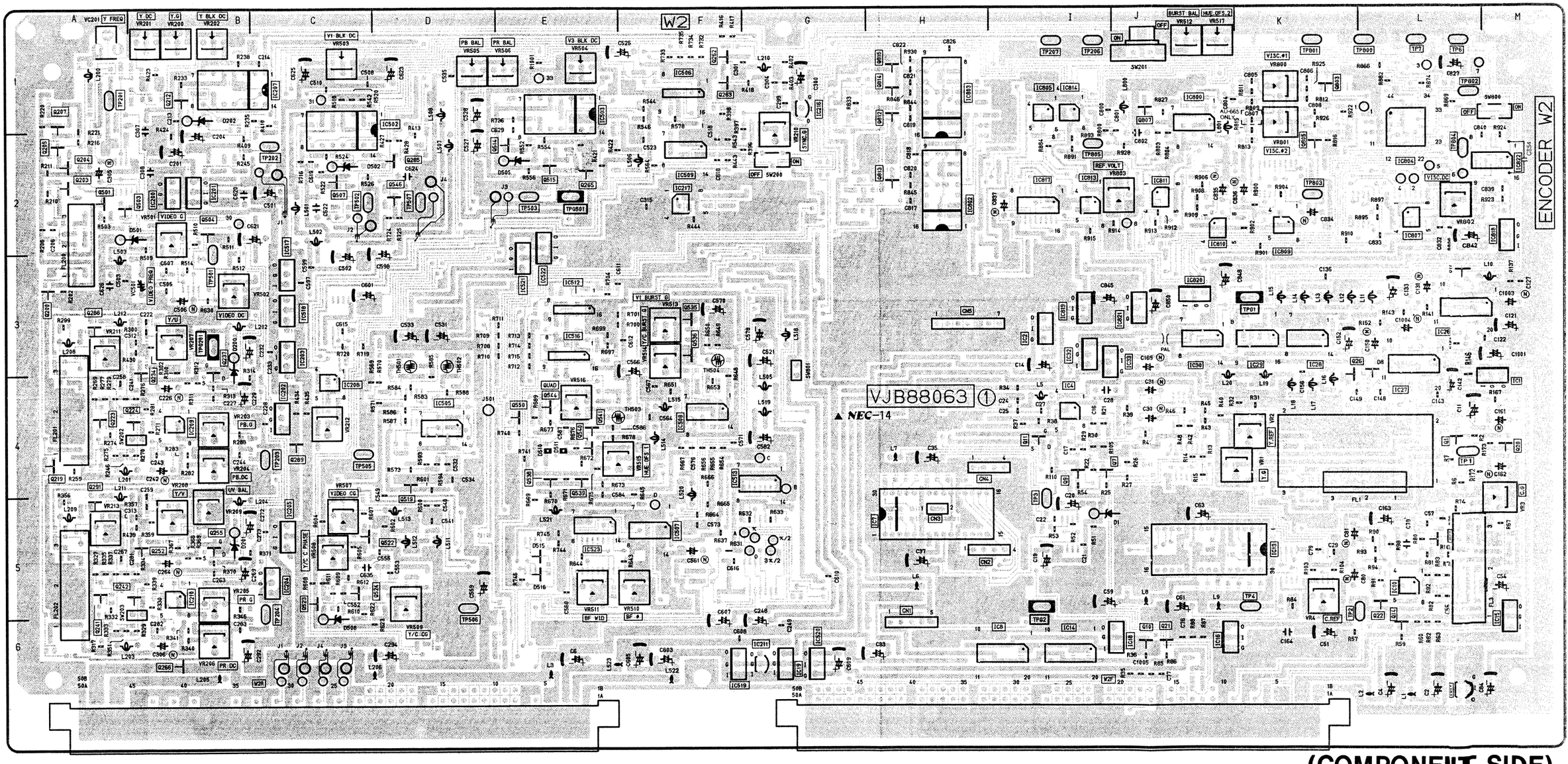

E)

REVERSE SIDE

W4 DECODER P.C.BOAR

W4(DECODER) P.C.BOARD(FOR NTSC)

TYPE \ MODEL	AU-65H	AU-63H	AU-62H
NTSC	VEP83172A	Not Used	Not Used
PAL	SCM-33	Not Used	Not Used

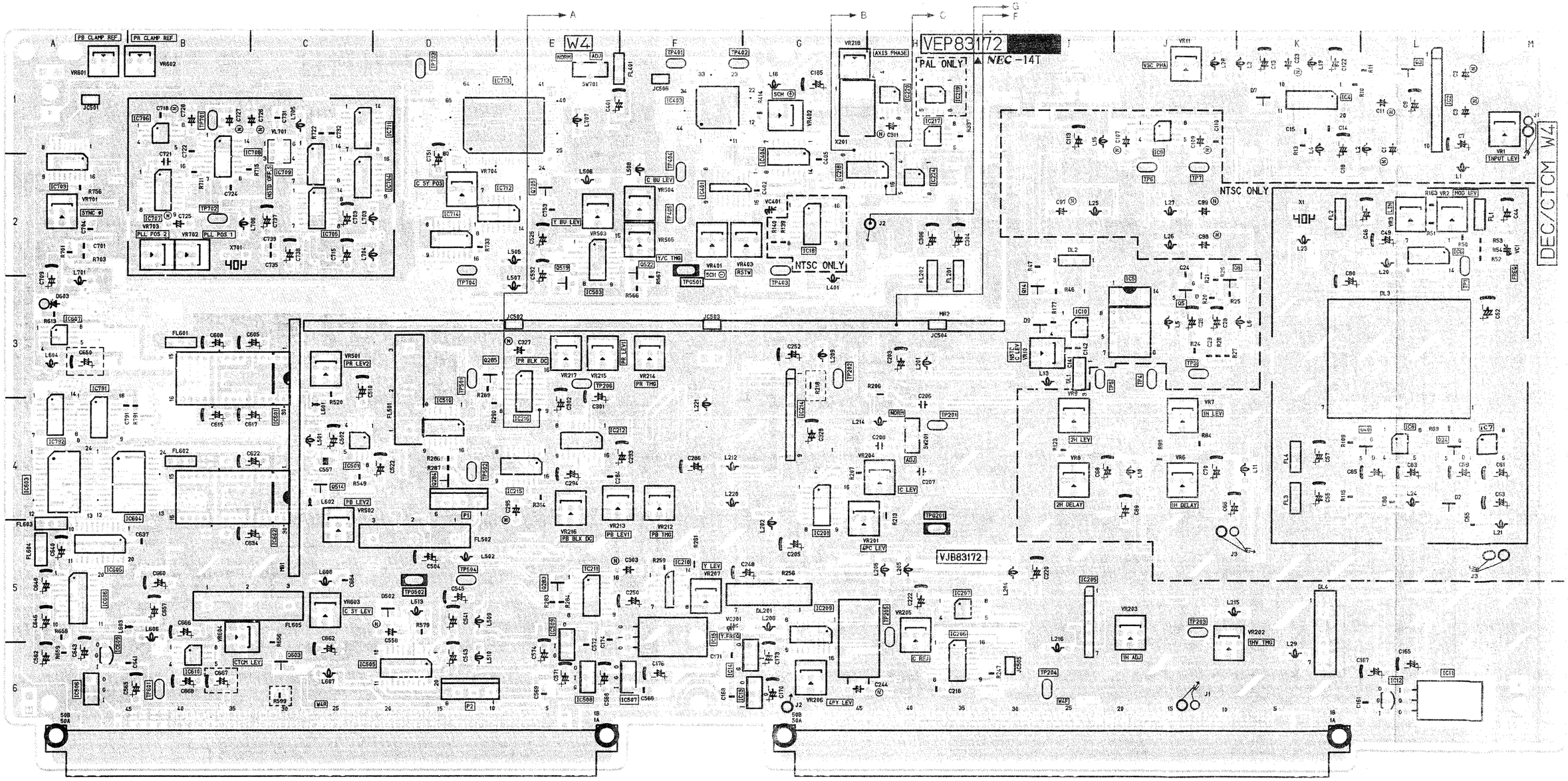

CHIP PART INFORMATION

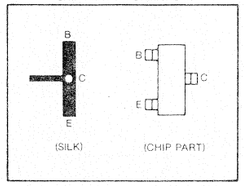

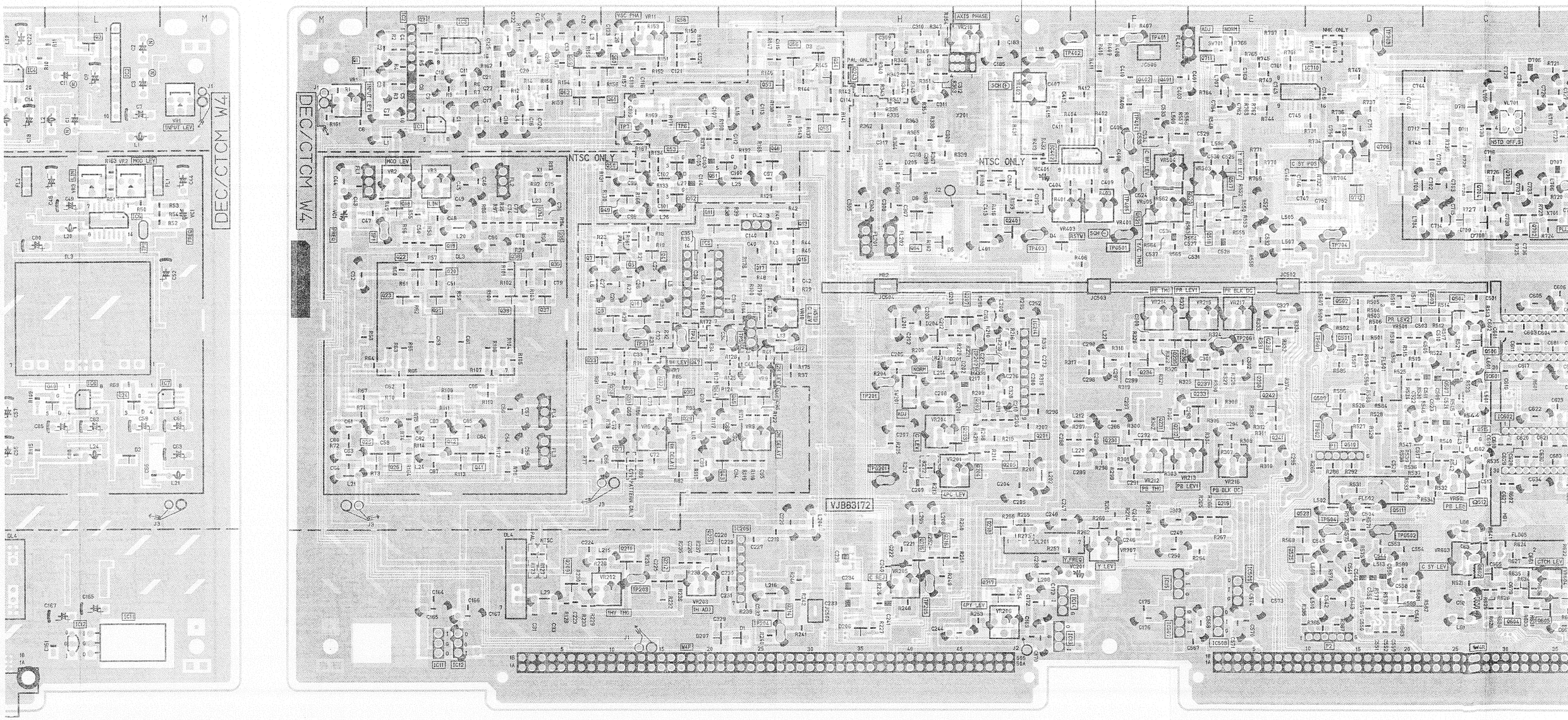

(COMPONENT SIDE)

W4 (DECODER) SUB P.C.BOARD (VEP83178A)

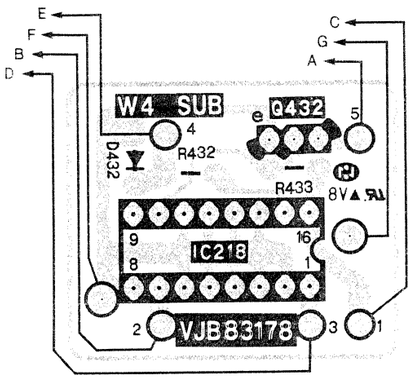

(FOIL SIDE)

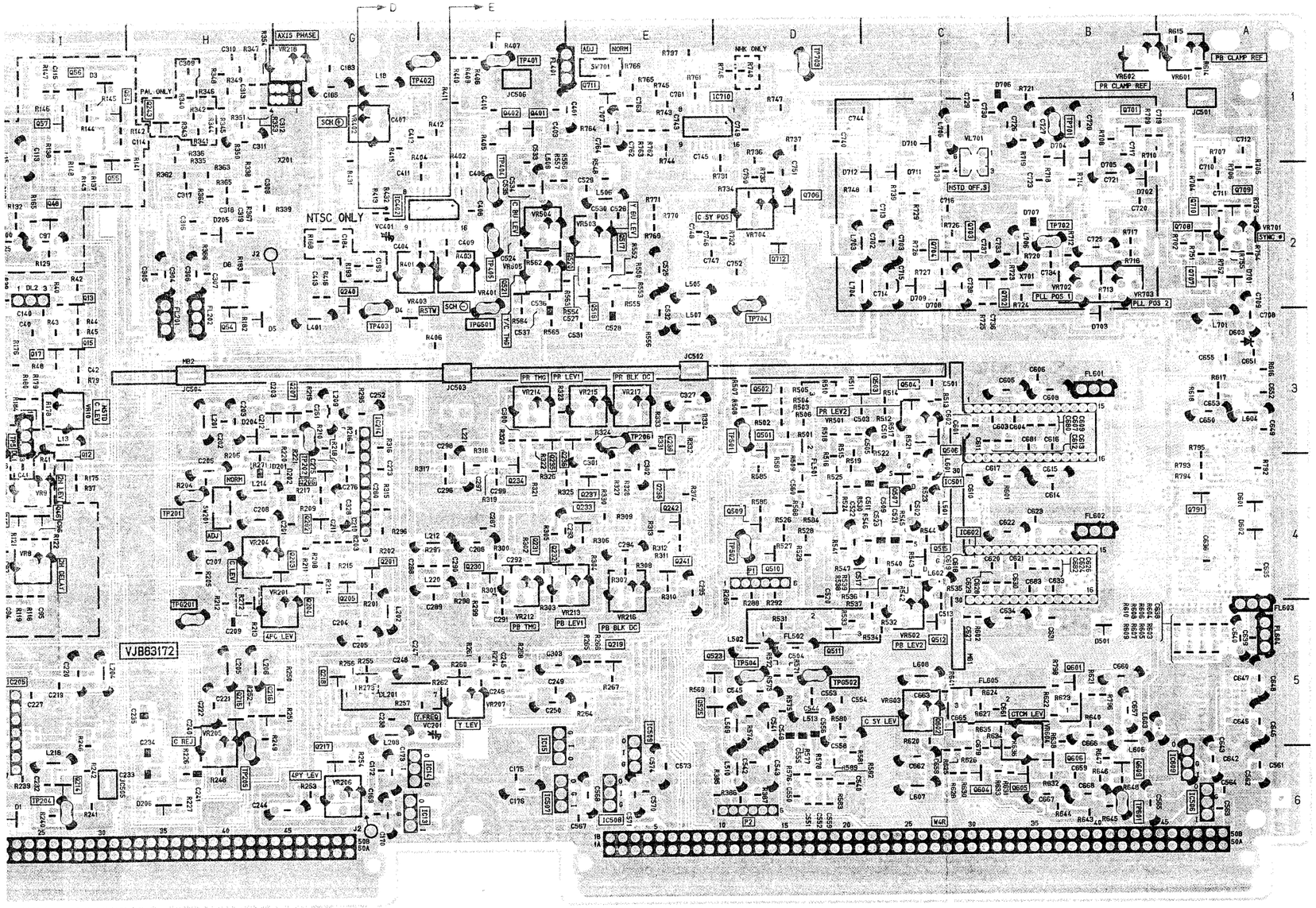

(FOIL SIDE)

P.C. Board Location

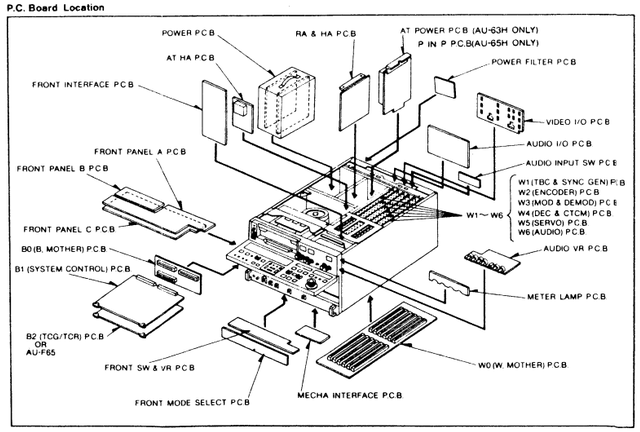

DEC/CTCM P.C.BOARD

COMPONENT SIDE

TRANSISTOR

Q3	L-1
Q5	J-3
Q8	J-3
Q14	I-3
Q24	L-4
Q40	L-4
Q283	E-5
Q284	D-4
Q285	D-3
Q514	C-4
Q519	E-3
Q522	F-2
Q603	C-6
Q705	E-2

INTEGRATED CIRCUIT

IC2	L-2
IC4	K-1
IC5	J-3
IC6	L-2
IC7	M-4
IC8	L-4
IC9	J-1
IC10	I-3
IC11	L-6
IC12	L-6
IC13	G-6
IC14	G-6
IC15	F-5
IC18	G-2
IC201	G-4
IC205	I-5
IC206	H-6
IC207	H-5
IC209	G-5
IC210	F-5
IC211	E-5
IC212	E-4
IC214	G-4
IC215	E-4
IC216	E-3
IC217	H-1
IC218	G-2
IC219	H-1
IC220	H-1
IC224	H-2
IC401	F-2
IC403	F-1
IC404	G-2
IC501	C-4
IC503	E-2
IC505	D-6
IC506	A-6
IC507	F-6
IC508	E-6
IC509	E-5
IC510	D-4
IC601	B-3
IC602	B-4
IC603	A-4
IC604	B-4
IC605	A-5
IC606	A-5
IC607	A-3
IC609	A-6
IC610	B-6
IC703	A-2
IC704	C-2
IC705	C-2
IC706	B-1
IC707	B-2
IC708	B-2
IC709	C-2
IC711	C-1
IC712	E-2
IC713	E-1
IC714	D-2
IC791	A-4
IC792	A-4

ADJUSTMENT

VR1	M-1
VR2	L-2
VR3	L-2
VR6	J-4
VR7	J-4
VR8	I-4
VR9	I-4
VR10	I-3
VR11	J-1
VR201	G-5
VR202	J-5
VR203	J-5
VR204	H-4
VR205	H-5
VR206	G-6
VR207	F-5
VR212	F-4
VR213	E-4
VR214	F-3
VR215	E-3
VR216	E-4
VR217	E-3
VR218	G-1
VR401	F-2
VR402	G-1
VR403	G-2
VR501	C-3
VR502	C-4
VR503	E-2
VR504	F-2
VR505	F-2
VR601	A-1
VR602	B-1
VR603	C-5
VR604	B-5
VR701	A-2
VR702	B-2
VR703	B-2
VR704	D-2
VC1	M-2
VR201	F-5
VR401	G-2

TEST POINT

TP1	L-1
TP3	J-3
TP4	J-3
TP5	I-3
TP6	J-2
TP7	J-2
TP201	H-4
TP202	G-3
TP203	J-5
TP204	I-6
TP205	H-5
TP206	E-3
TP401	F-1
TP402	F-1
TP403	G-2
TP404	F-2
TP405	F-2
TP501	D-3
TP502	D-4
TP504	D-5
TP601	B-6
TP701	B-1
TP702	B-2
TP703	D-1
TP704	D-2
TPG201	H-5
TPG501	F-2
TPG502	D-5

CONNECTOR

P1	D-4
P2	D-6

FOIL SIDE

TRANSISTOR

Q1	M-1
Q2	L-1
Q4	J-3
Q6	J-3
Q7	J-3
Q9	J-3
Q10	J-3
Q11	J-2
Q12	I-3
Q13	I-2
Q15	I-3
Q17	I-3
Q18	L-2
Q19	L-3
Q20	L-3
Q21	L-3
Q22	L-3
Q23	L-3
Q25	L-4
Q26	L-4
Q27	J-4
Q28	J-4
Q29	J-4
Q30	J-4
Q31	J-4
Q32	J-4
Q33	J-4
Q34	K-2
Q35	K-3
Q36	K-3
Q37	K-3
Q38	K-3
Q39	K-3
Q41	L-4
Q42	L-4
Q43	I-4
Q44	I-4
Q45	I-4
Q46	I-4
Q47	J-4
Q48	I-2
Q49	J-2
Q50	J-2
Q51	I-2
Q52	J-2
Q53	J-2
Q54	I-1
Q55	I-1
Q56	I-1
Q57	I-1
Q58	J-1
Q59	K-1
Q60	J-1
Q61	K-1
Q62	K-1
Q64	H-2
Q201	G-4
Q202	G-4
Q203	G-4
Q204	G-4
Q205	G-4
Q206	G-4
Q207	G-3
Q209	K-5
Q210	J-5
Q212	J-5
Q213	J-5
Q214	I-6
Q215	H-5
Q216	H-5
Q217	G-6
Q218	G-5
Q219	E-5
Q230	F-4
Q231	F-4
Q232	F-4
Q233	E-4
Q234	F-4
Q235	F-3
Q236	E-3
Q237	E-4
Q238	E-4
Q239	E-3
Q240	G-2
Q241	E-4
Q242	E-4
Q243	H-1
Q401	F-1
Q402	F-1
Q501	D-3
Q502	D-3
Q503	D-3
Q504	C-3
Q506	C-3
Q507	C-4
Q509	D-4
Q510	D-4
Q511	D-5
Q512	C-5
Q515	C-4
Q517	E-2
Q518	E-2
Q520	F-2
Q521	F-2
Q523	E-5
Q525	E-5
Q601	B-5
Q602	C-5
Q604	C-6
Q605	B-6
Q606	B-6
Q609	B-6
Q701	B-1
Q702	C-2
Q703	C-2
Q704	C-2
Q706	D-2
Q707	A-2
Q708	A-2
Q709	A-2
Q710	A-2
Q711	E-1
Q712	D-2
Q791	A-4

INTEGRATED CIRCUIT

IC1	L-1
IC3	L-1
IC402	F-2
IC710	D-1

DEC/CTCM P.C.BOARD

COMPONENT SIDE

TRANSISTOR

Q11	H-6
Q283	D-5
Q285	D-3
Q323	F-5
Q514	C-4
Q603	C-6

INTEGRATED CIRCUIT

IC1	J-6
IC2	J-5
IC3	J-6
IC4	K-5
IC5	L-5
IC6	K-6
IC8	H-6
IC9	H-6
IC10	G-6
IC11	L-1
IC12	L-2
IC13	L-2
IC14	M-1
IC15	L-2
IC17	L-1
IC18	L-1
IC21	K-1
IC22	L-1
IC24	K-1
IC25	K-2
IC26	I-5
IC27	H-5
IC51	L-6
IC52	E-6
IC53	F-6
IC54	E-6
IC201	M-5
IC202	L-4
IC203	K-3
IC204	K-3
IC205	L-3
IC206	K-4
IC207	K-3
IC208	K-3
IC209	K-5
IC210	J-4
IC211	K-4
IC212	H-4
IC213	I-4
IC214	I-3
IC215	G-5
IC216	H-3
IC217	H-3
IC219	H-2
IC220	G-4
IC221	J-2
IC222	J-2
IC223	J-2
IC224	J-2
IC225	G-3
IC226	I-2
IC227	I-1
IC228	J-1
IC229	J-1
IC230	H-1
IC233	J-1
IC234	E-4
IC235	E-4
IC236	E-4
IC237	E-3
IC238	I-2
IC401	G-2
IC402	G-2
IC403	G-1
IC405	H-5
IC406	H-5
IC407	H-4
IC409	H-4
IC501	C-4
IC503	F-2
IC504	F-1
IC505	D-6
IC506	A-6
IC507	E-6
IC510	D-4
IC601	B-3
IC602	B-4
IC603	A-4
IC604	B-4
IC605	A-5
IC606	A-5
IC607	A-3
IC609	A-6
IC610	B-6
IC703	A-2
IC704	C-2
IC705	C-2
IC706	B-1
IC707	B-2
IC708	B-2
IC709	C-2
IC711	C-1
IC713	E-1
IC781	D-2
IC783	D-2
IC791	A-4
IC792	A-4

TEST POINT

TP1	K-5
TP2	L-5
TP111	K-2
TP201	L-4
TP202	L-4
TP203	I-4
TP401	F-1
TP402	H-1
TP403	F-2
TP404	F-2
TP405	G-2
TP451	I-1
TP452	J-2
TP501	D-3
TP502	D-4
TP504	D-5
TP601	B-6
TP701	B-1
TP702	B-2
TP703	C-1
TP704	D-2
TPG201	K-4
TPG501	F-2
TPG502	D-5

ADJUSTMENT

VR1	I-6
VR2	J-6
VR111	L-1
VR112	L-2
VR113	L-2
VR322	F-4
VR323	E-4
VR351	F-4
VR352	E-4
VR366	F-3
VR367	E-3
VR401	G-2
VR403	F-2
VR451	J-1
VR501	C-3
VR502	C-5
VR503	F-2
VR504	F-1
VR505	F-1
VR511	F-1
VR512	F-2
VR601	A-1
VR602	B-1
VR603	C-5
VR604	B-5
VR701	A-2
VR702	B-2
VR703	B-2
VR704	D-2
VR781	D-2
VC321	F-4

CONNECTOR

P1	D-4
P2	D-6
P3	K-1
P4	L-3
P5	K-2

FOIL SIDE

TRANSISTOR

Q1	I-5
Q2	I-5
Q3	J-5
Q4	J-5
Q5	J-5
Q6	J-5
Q7	K-5
Q8	K-5
Q9	J-5
Q10	J-5
Q61	H-6
Q101	M-2
Q111	K-2
Q284	D-4
Q321	F-5
Q322	F-5
Q324	F-4
Q325	E-5
Q326	E-5
Q327	F-5
Q328	E-5
Q329	F-5
Q330	F-5
Q351	F-4
Q352	F-4
Q353	E-4
Q354	E-4
Q355	E-4
Q366	F-3
Q367	F-3
Q368	E-3
Q369	E-3
Q370	E-3
Q401	G-1
Q402	G-1
Q450	I-1
Q451	I-1
Q452	J-1
Q501	D-3
Q502	D-3
Q503	C-3
Q504	C-3
Q506	C-3
Q507	C-4
Q509	D-4
Q510	D-4
Q511	D-5
Q512	C-5
Q515	C-4
Q517	F-2
Q518	F-2
Q519	F-2
Q520	F-1
Q521	F-1
Q522	F-1
Q523	D-5
Q525	D-5
Q526	E-1
Q527	E-2
Q528	F-2
Q601	B-5
Q602	C-5
Q604	C-6
Q605	B-6
Q606	B-6
Q609	B-6
Q701	B-1
Q702	C-2
Q703	C-2
Q704	C-2
Q705	D-1
Q706	D-2
Q707	A-2
Q708	A-2
Q709	A-2
Q710	A-2
Q711	E-1
Q712	D-1
Q791	A-4

INTEGRATED CIRCUIT

IC7	M-3
IC19	K-1
IC20	K-1
IC23	L-1
IC710	E-1
IC712	D-2
IC714	D-1

W4(DECODER) P.C.BOARD(FOR PAL)

TYPE \ MODEL	AU-65H	AU-63H	AU-62H
NTSC	SCM-30	Not Used	Not Used
PAL	VEP83173A	Not Used	Not Used

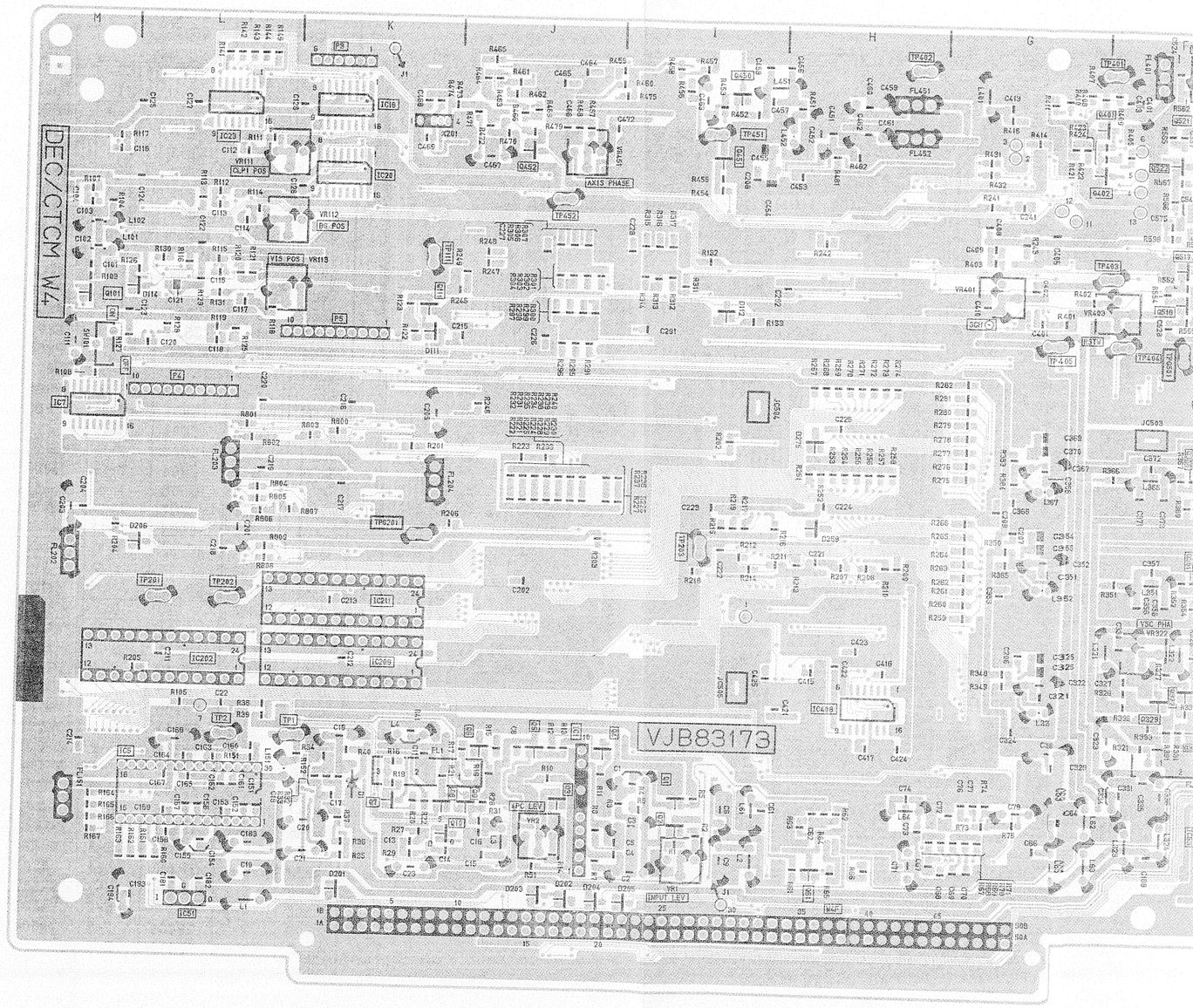

P.C. Board Location

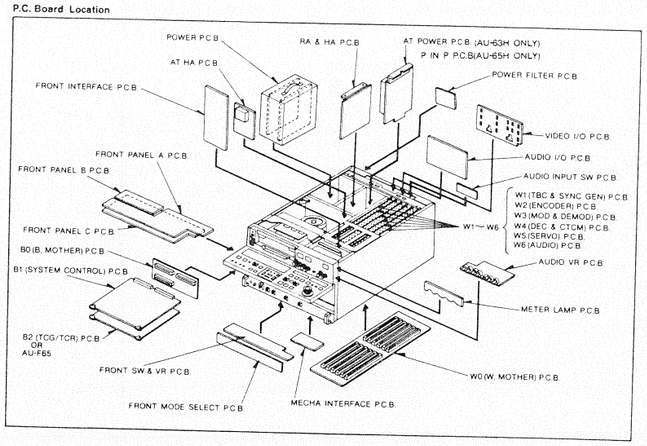

CHIP PART INFORMATION

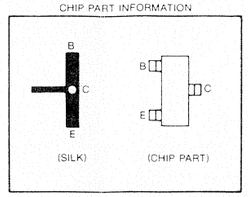

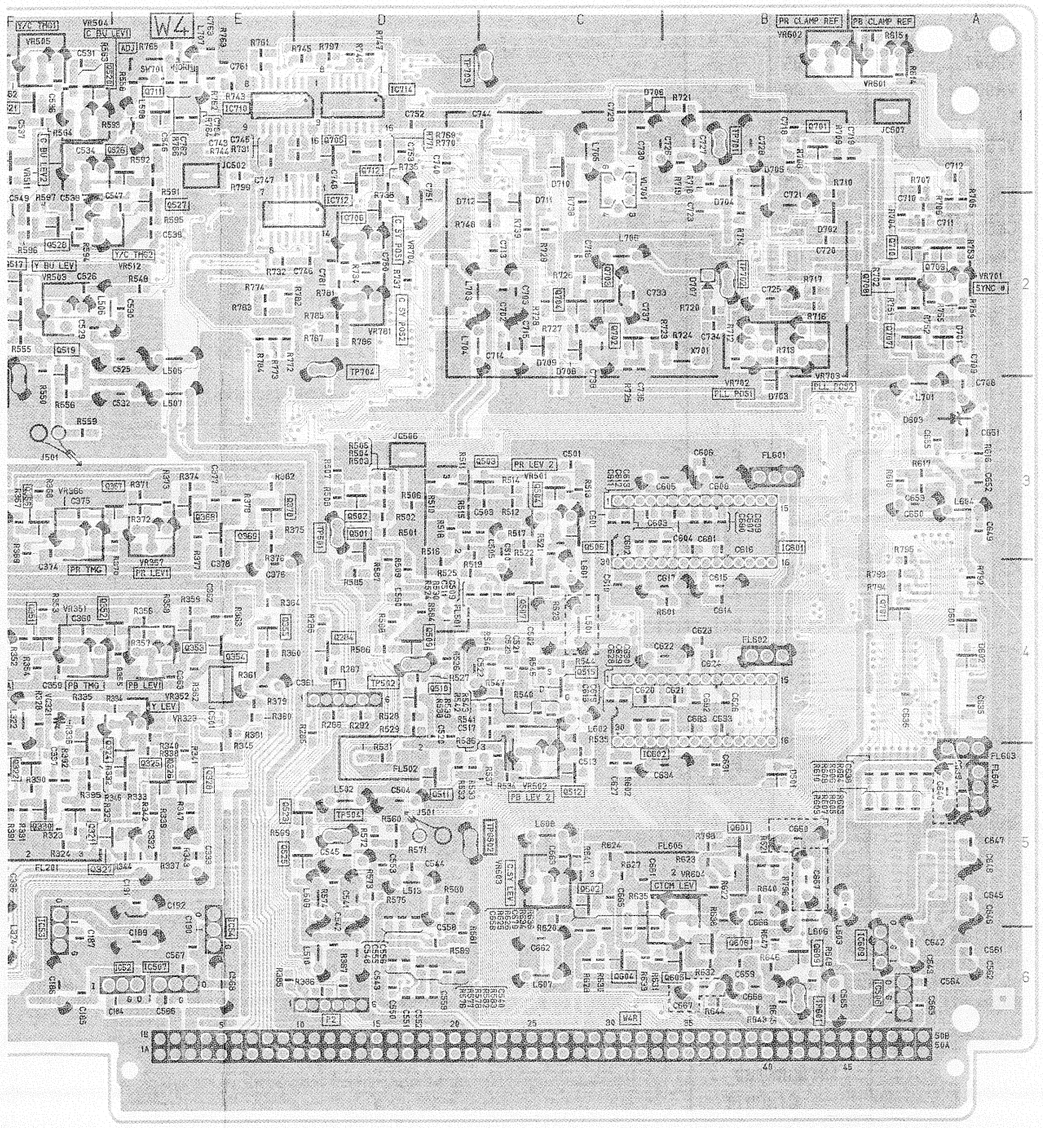

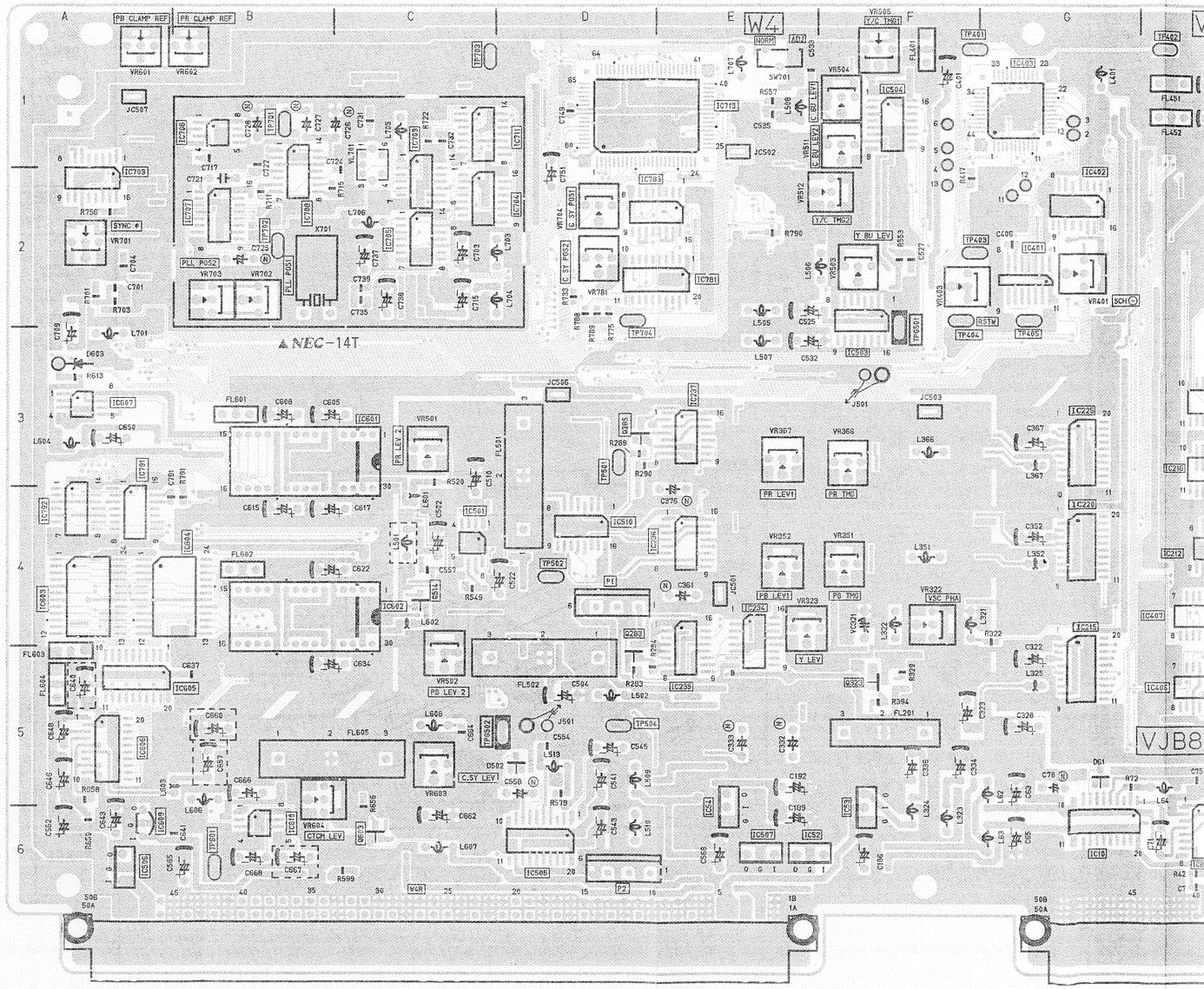

(FOIL SIDE)

CHIP PART INFORMATION

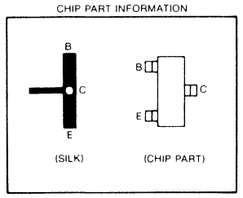

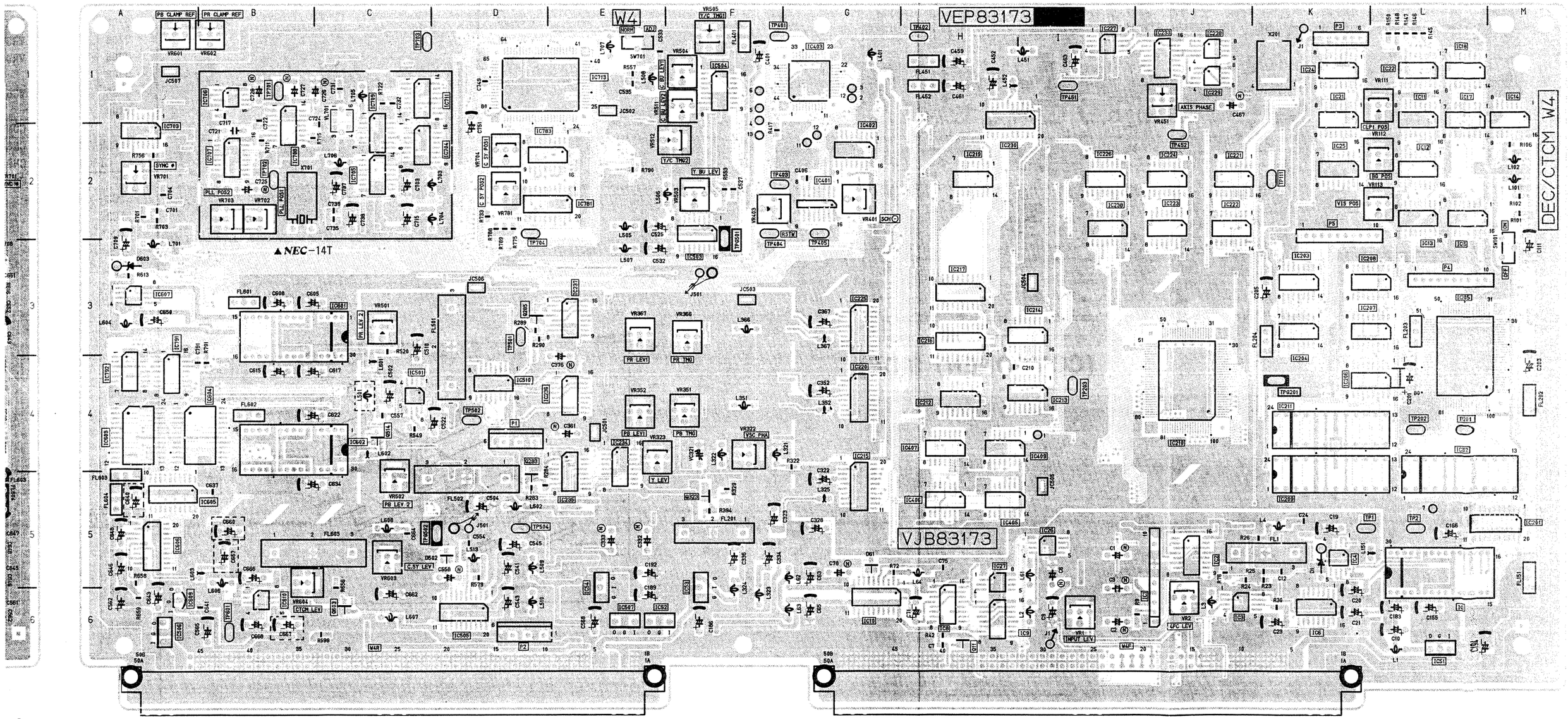

(COMPONENT SIDE)

REVERSE SIDE

SENC I P IN P P.C.BOA

W6(AUDIO) P.C.BOARD

TYPE \ MODEL	AU-65H	AU-63H	AU-62H
NTSC	VEP84095J	VEP84095C	VEP84095C
PAL	VEP84095K	VEP84095E	VEP84095E

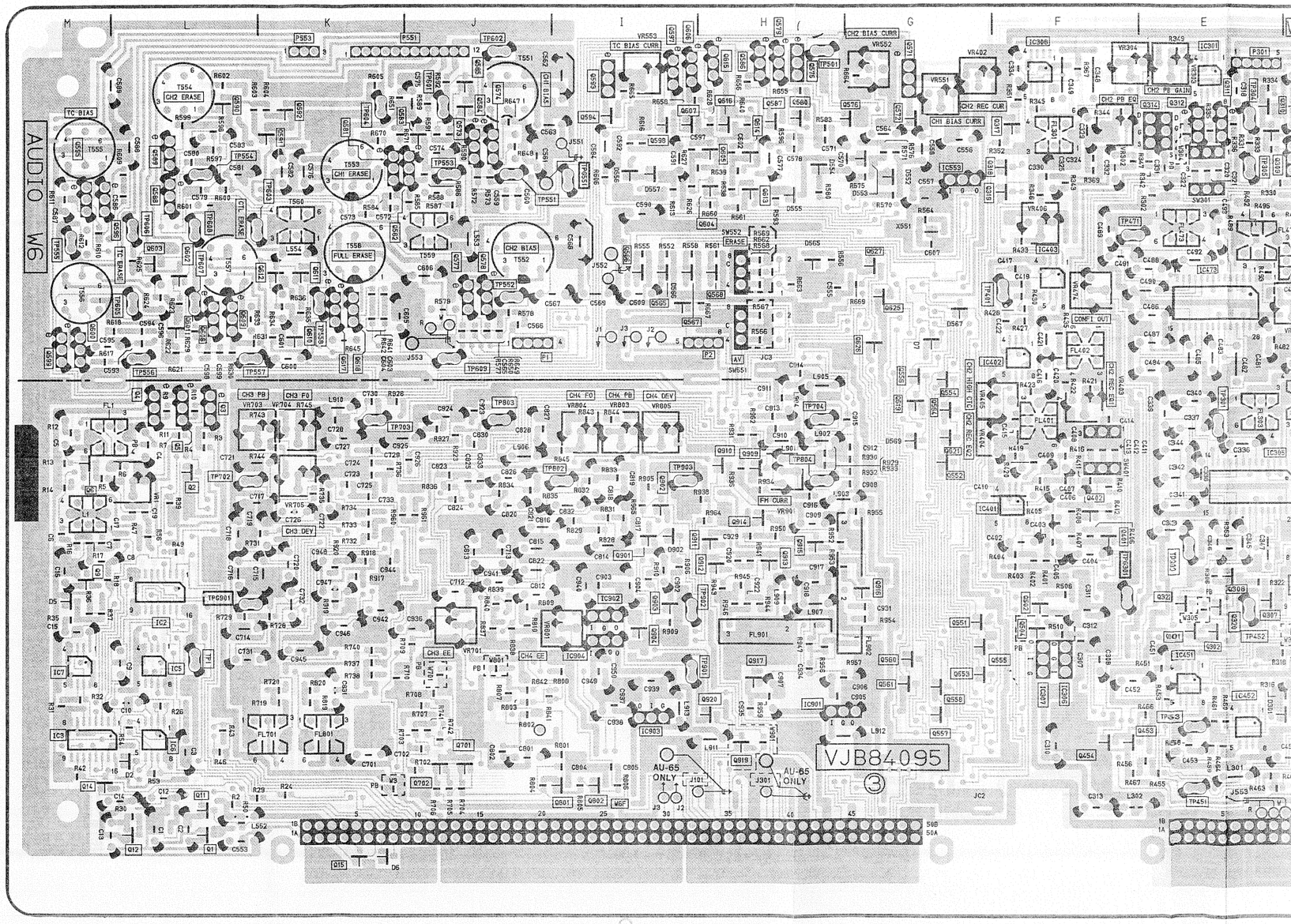

P.C. Board Location

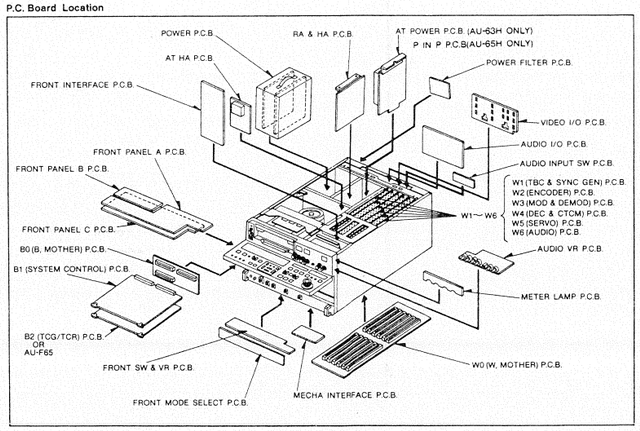

CHIP PART INFORMATION

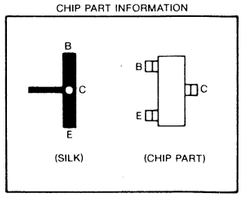

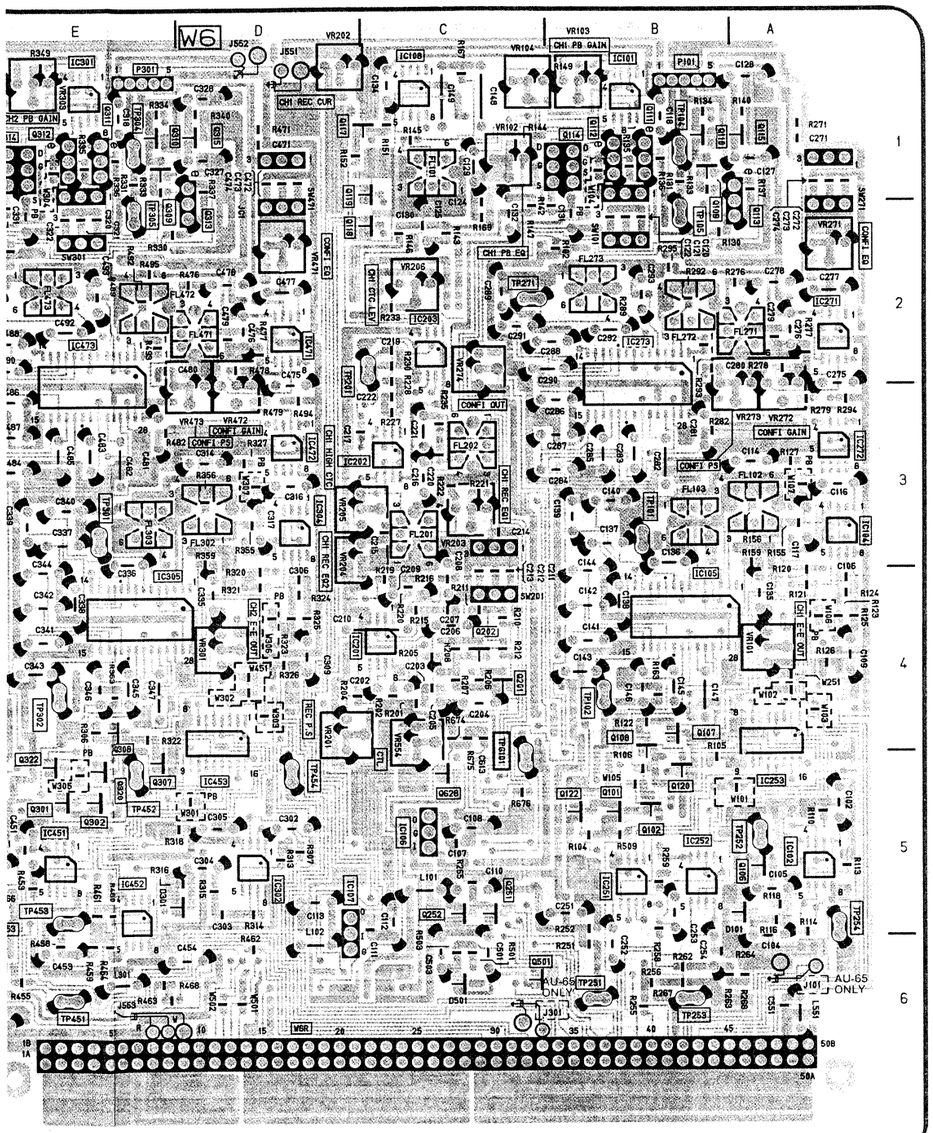

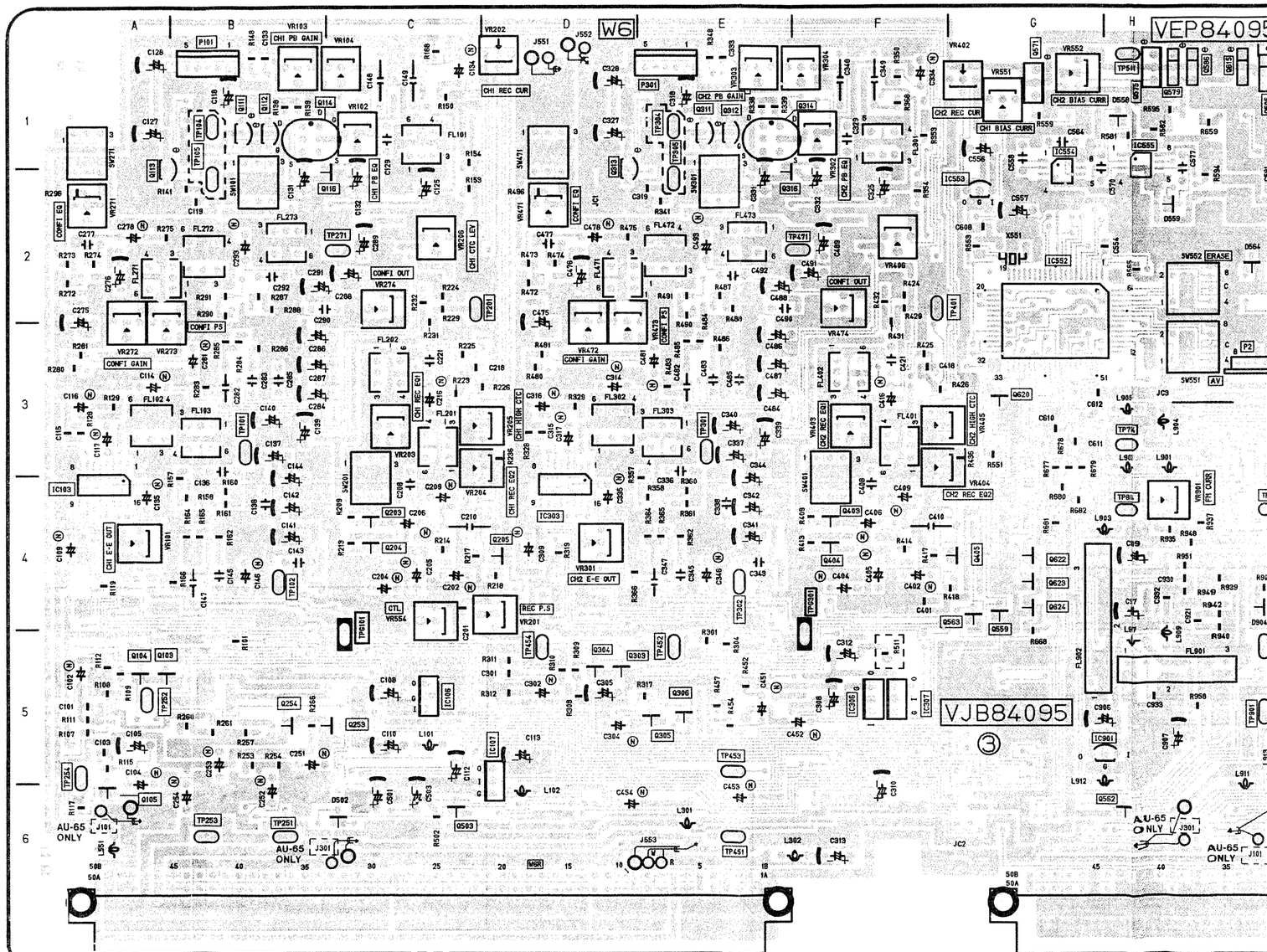

(FOIL SIDE)

CHIP PART INFORMATION

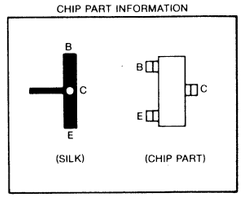

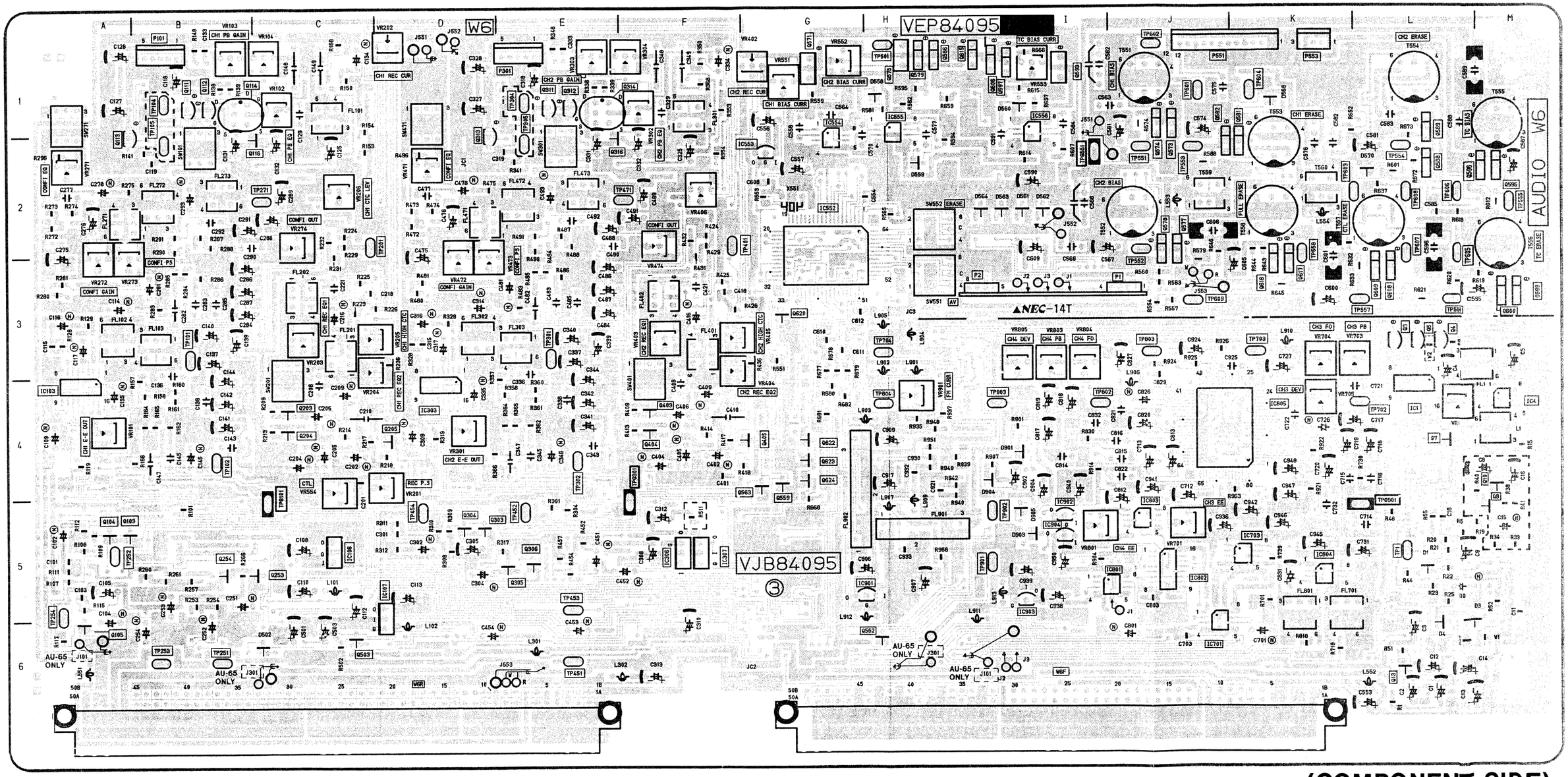

E)

(COMPONENT SIDE)

B0(MOTHER 2)P.C.BOARD

TYPE \ MODEL	AU-65H	AU-63H	AU-62H
NTSC	VEP80549H	VEP80549K	VEP80549J
PAL	VEP80549H	VEP80549K	VEP80549J

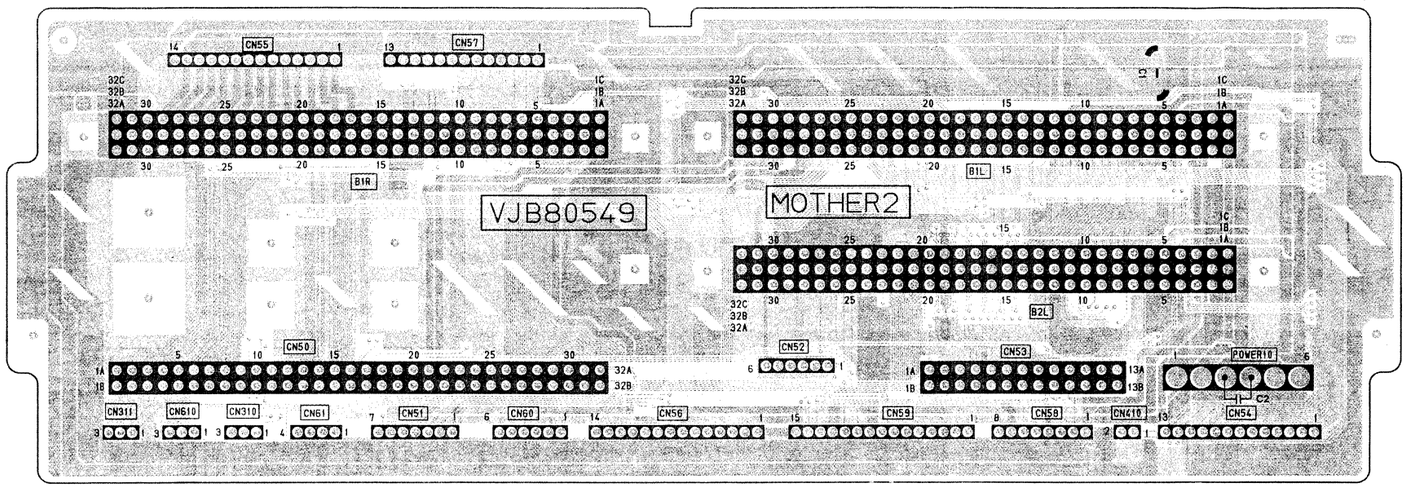

(FOIL SIDE)

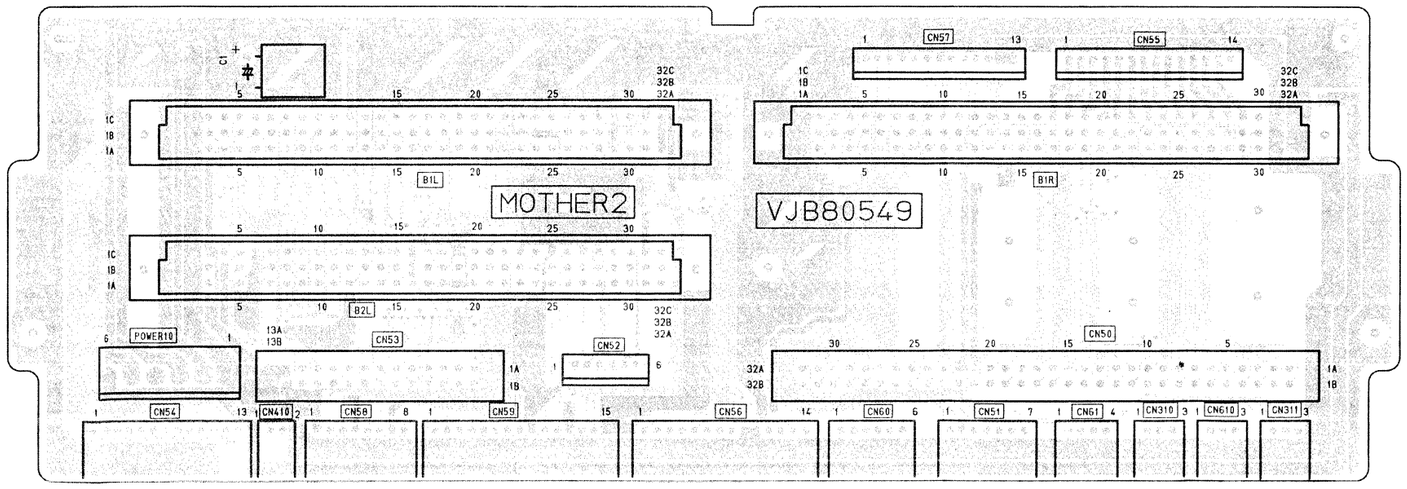

(COMPONENT SIDE)

CHIP PART INFORMATION

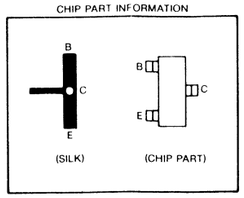

P.C. Board Location

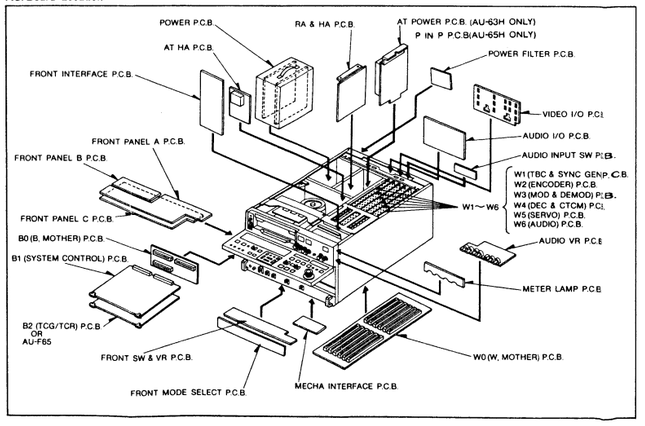

B1(SYSTEM CONTROL) P.C.BOARD

TYPE \ MODEL	AU-65H	AU-63H	AU-62H
NTSC	VEP86121A	VEP86121C	VEP86121B
PAL	VEP86121D	VEP86121F	VEP86121E

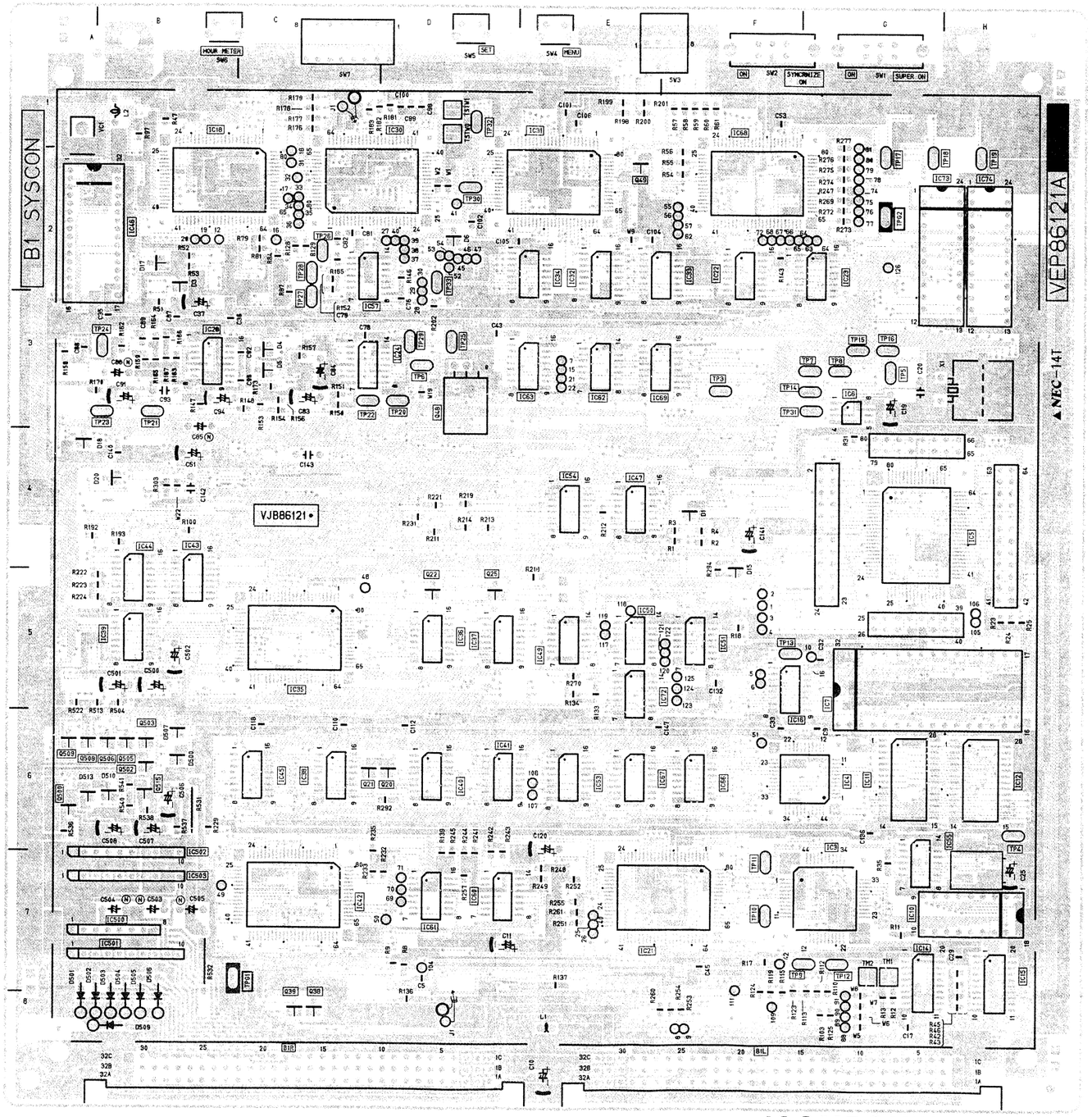

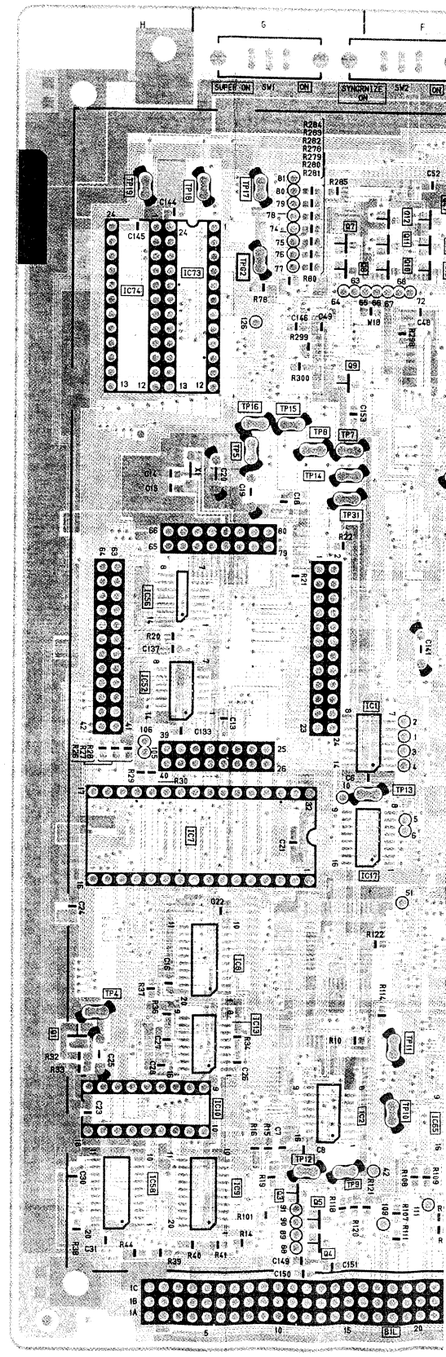

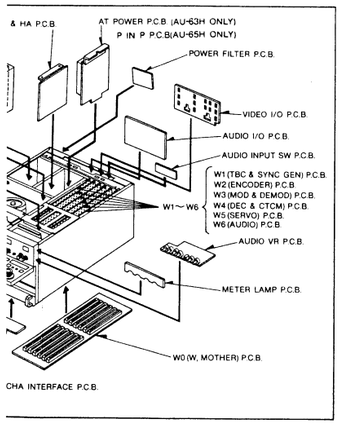

(COMPONENT SIDE)

C.BOARD

TYPE \ MODEL	AU-65H	AU-63H	AU-62H
NTSC	VEP86121A	VEP86121C	VEP86121B
PAL	VEP86121D	VEP86121F	VEP86121E

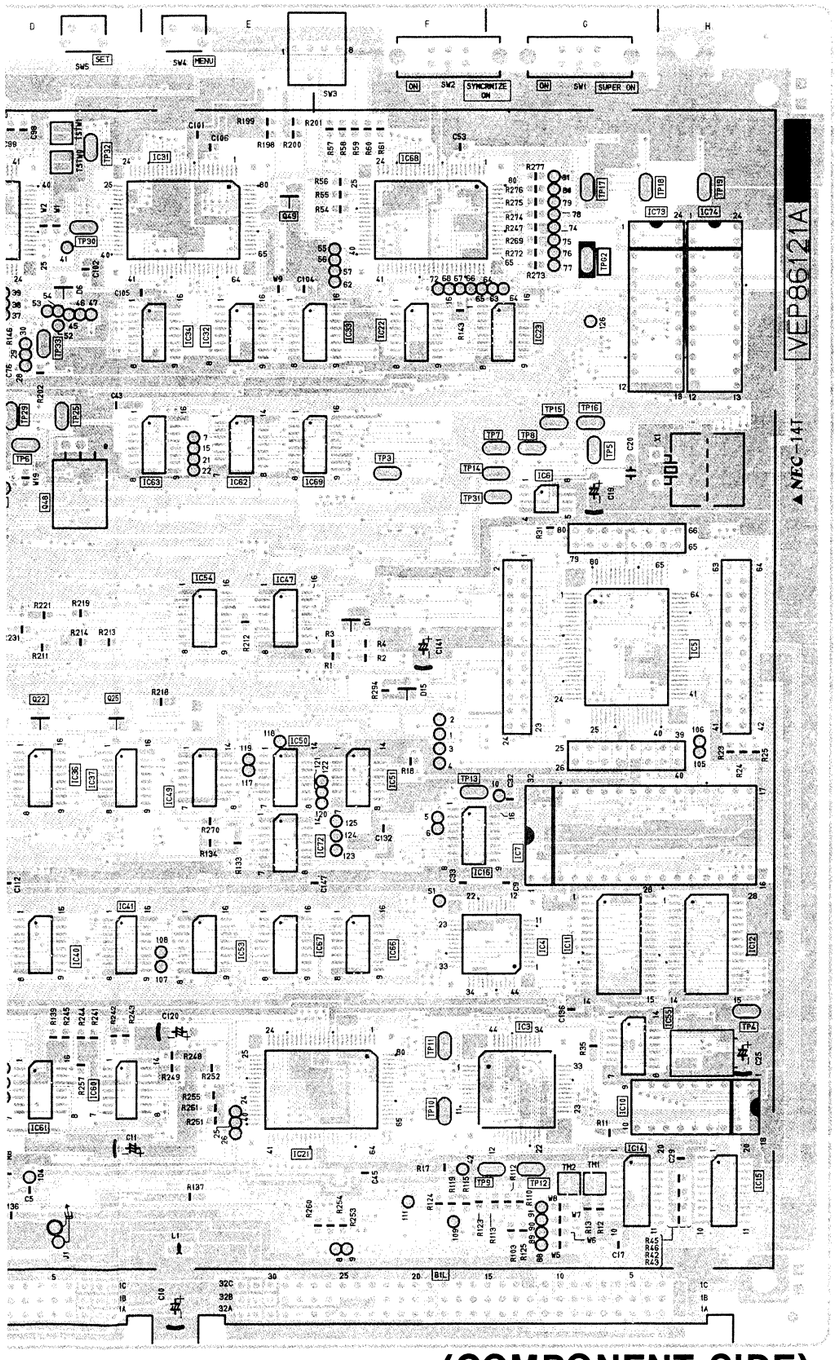

(COMPONENT SIDE)

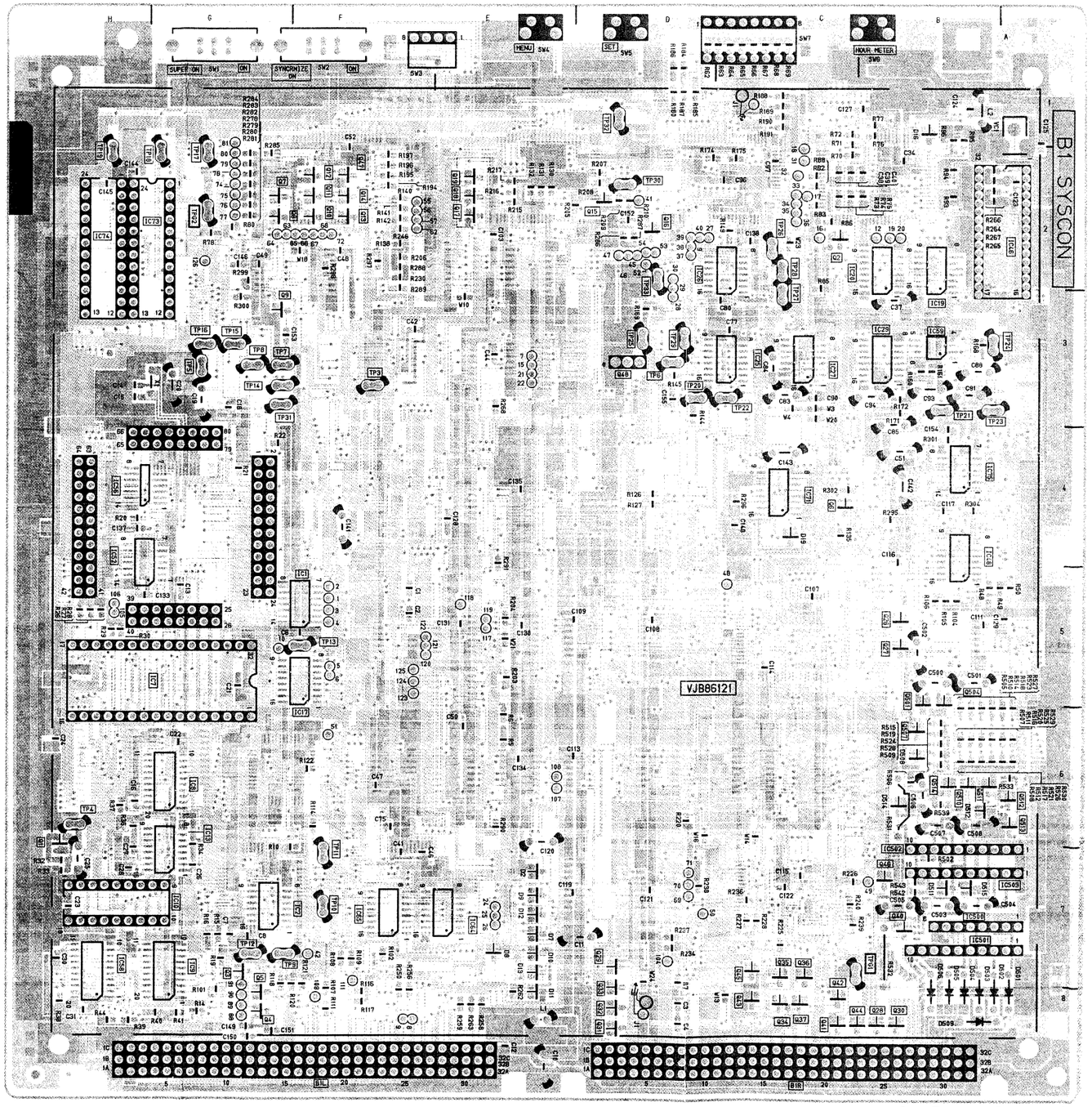

(FOIL SIDE)

B1 SYSCON P.C.BOARD

COMPONENT SIDE						FOIL SIDE					
TRANSISTOR		IC40	D-6	TP18	G-2	TRANSISTOR		Q514	B-6
Q20	D-6	IC41	D-6	TC19	H-2	Q1	H-6		
Q21	C-6	IC42	C-7	TC20	D-3	Q2	C-2	INTEGRATED CIRCUIT	
Q22	D-5	IC43	B-5	TC21	B-3	Q3	G-7	IC1	F-5
Q25	D-5	IC44	B-5	TC22	C-3	Q4	G-8	IC2	G-7
Q38	C-8	IC45	C-6	TC23	B-3	Q5	G-8	IC8	G-6
Q39	C-8	IC46	B-2	TC24	B-3	Q6	C-4	IC9	G-7
Q48	D-3	IC47	E-4	TC25	D-3	Q7	G-2	IC13	G-6
Q49	E-2	IC49	E-5	TC26	C-2	Q8	G-2	IC17	F-5
Q500	A-6	IC50	E-5	TC27	C-3	Q9	G-3	IC19	B-2
Q502	B-6	IC51	F-5	TC28	C-2	Q10	F-2	IC20	B-2
Q503	B-6	IC53	E-6	TC29	D-3	Q11	F-2	IC25	C-3
Q505	B-6	IC54	E-4	TC30	D-2	Q12	F-2	IC26	C-2
Q506	B-6	IC55	G-7	TC31	G-3	Q13	F-2	IC27	C-3
Q508	A-6	IC57	C-2	TC32	D-1	Q14	F-2	IC29	B-3
Q509	A-6	IC60	D-7	TC33	D-2	Q15	D-2	IC48	B-4
Q515	B-6	IC61	D-7			Q16	D-2	IC52	H-4
		IC62	E-3	TPG1	C-7	Q17	E-2	IC56	H-4
INTEGRATED CIRCUIT		IC63	E-3	TPG2	G-2	Q18	E-2	IC58	H-7
IC3	G-7	IC66	F-6			Q19	E-2	IC59	B-3
IC4	G-6	IC67	E-6	ADJUSTMENT		Q26	B-5	IC64	E-7
IC5	G-4	IC68	F-2	VC1	A-1	Q27	B-5	IC65	F-7
IC6	G-3	IC69	E-3			Q28	B-8	IC71	C-4
IC7	G-5	IC72	E-5			Q29	D-7	IC75	B-4
IC10	H-7	IC73	H-2			Q30	B-8		
IC11	G-6	IC74	H-2			Q31	D-8		
IC12	H-6	IC500	B-7			Q32	D-8		
IC14	G-7	IC501	B-7			Q33	D-8		
IC15	H-7	IC502	B-7			Q34	C-8		
IC16	F-5	IC503	B-7			Q35	C-7		
IC18	B-2	TEST POINT				Q36	C-7		
IC21	F-7	TP3	F-3			Q37	C-8		
IC22	F-2	TP4	H-6			Q40	B-7		
IC23	G-2	TP5	G-3			Q41	C-8		
IC24	C-3	TP6	D-3			Q42	C-8		
IC28	B-3	TP7	G-3			Q43	C-8		
IC30	C-2	TP8	G-3			Q44	B-8		
IC31	E-2	TP9	G-7			Q45	C-7		
IC32	E-2	TP10	F-7			Q46	B-7		
IC33	F-2	TP11	F-7			Q47	F-2		
IC34	E-2	TP12	G-7			Q501	B-5		
IC35	C-5	TP13	F-5			Q504	B-5		
IC36	D-5	TP14	G-3			Q507	B-6		
IC37	D-5	TP15	G-3			Q510	B-6		
IC38	C-6	TP16	G 3			Q511	B-6		
IC39	B-5	TP17	G-2			Q512	A-6		
						Q513	A-6		

VIDEO I/O P.C.BOARD

TYPE \ MODEL	AU-65H	AU-63H	AU-62H
NTSC	VEP83174A	VEP83174B	VEP83174B
PAL	VEP83174C	VEP83174B	VEP83174B

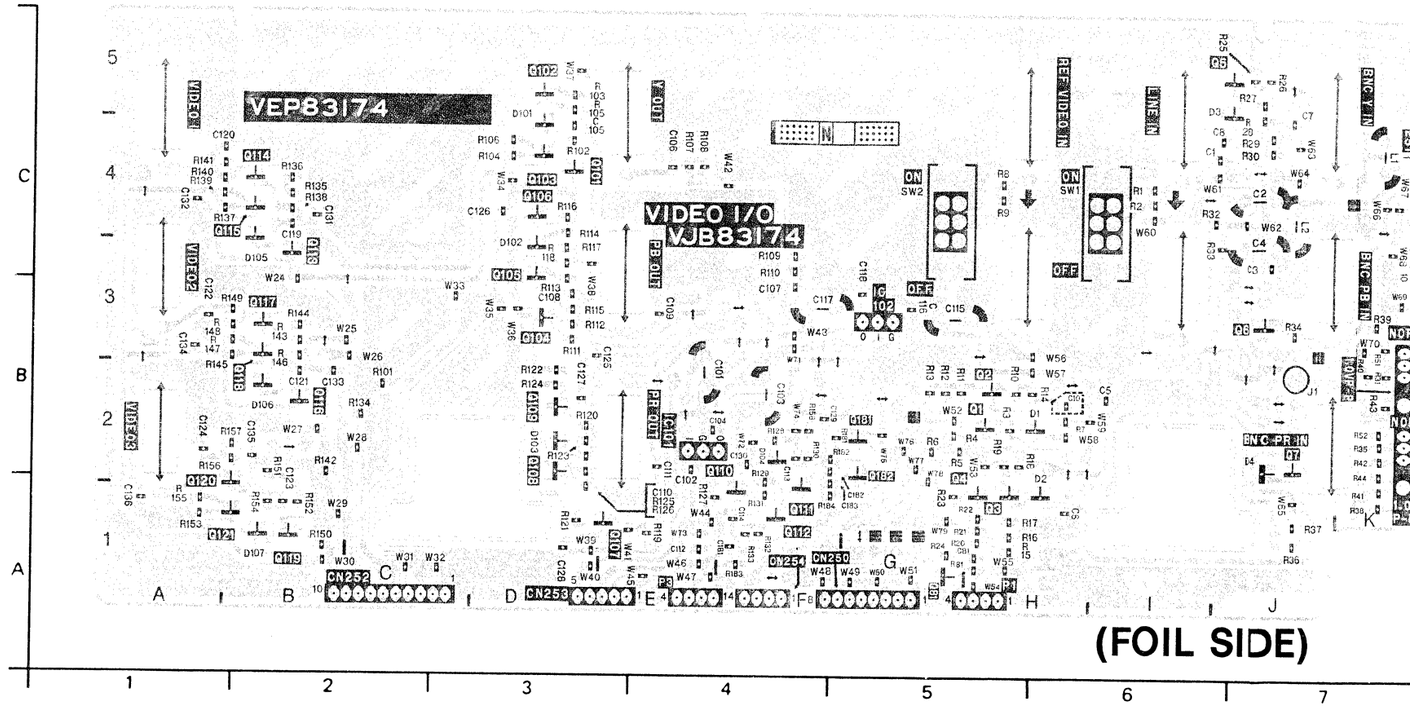

VIDEO I/O P.C.BOARD

FOIL SIDE				INTEGRATED CIRCUIT	
TRANSISTOR					
Q1	H-2	Q111	F-1	IC101	E-2
Q2	H-2	Q112	F-1	IC102	G-3
Q3	H-1	Q113	B-3		
Q4	H-1	Q114	B-4	CONNECTOR	
Q5	J-5	Q115	B-4	CN250	G-1
Q6	J-3	Q116	B-2	CN251	K-4
Q7	J-2	Q117	B-3	CN252	C-1
Q81	G-1	Q118	B-3	CN253	D-1
Q101	D-4	Q119	B-1	CN254	F-1
Q102	D-5	Q120	B-1		
Q103	D-4	Q121	B-1	P1	H-1
Q104	D-3	Q181	G-2	P3	E-1
Q105	D-3	Q182	G-2		
Q106	D-4				
Q107	E-1				
Q108	D-2				
Q109	D-2				
Q110	F-1				

AUDIO I/O P.C.BOARD

TYPE \ MODEL	AU-65H	AU-63H	AU-62H
NTSC	VEP84094G	VEP84094C	VEP84094C
PAL	VEP84094G	VEP84094C	VEP84094C

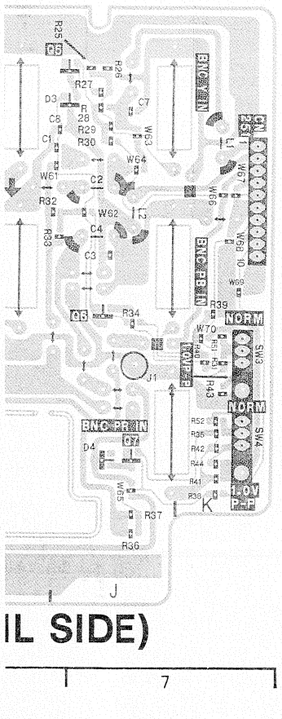

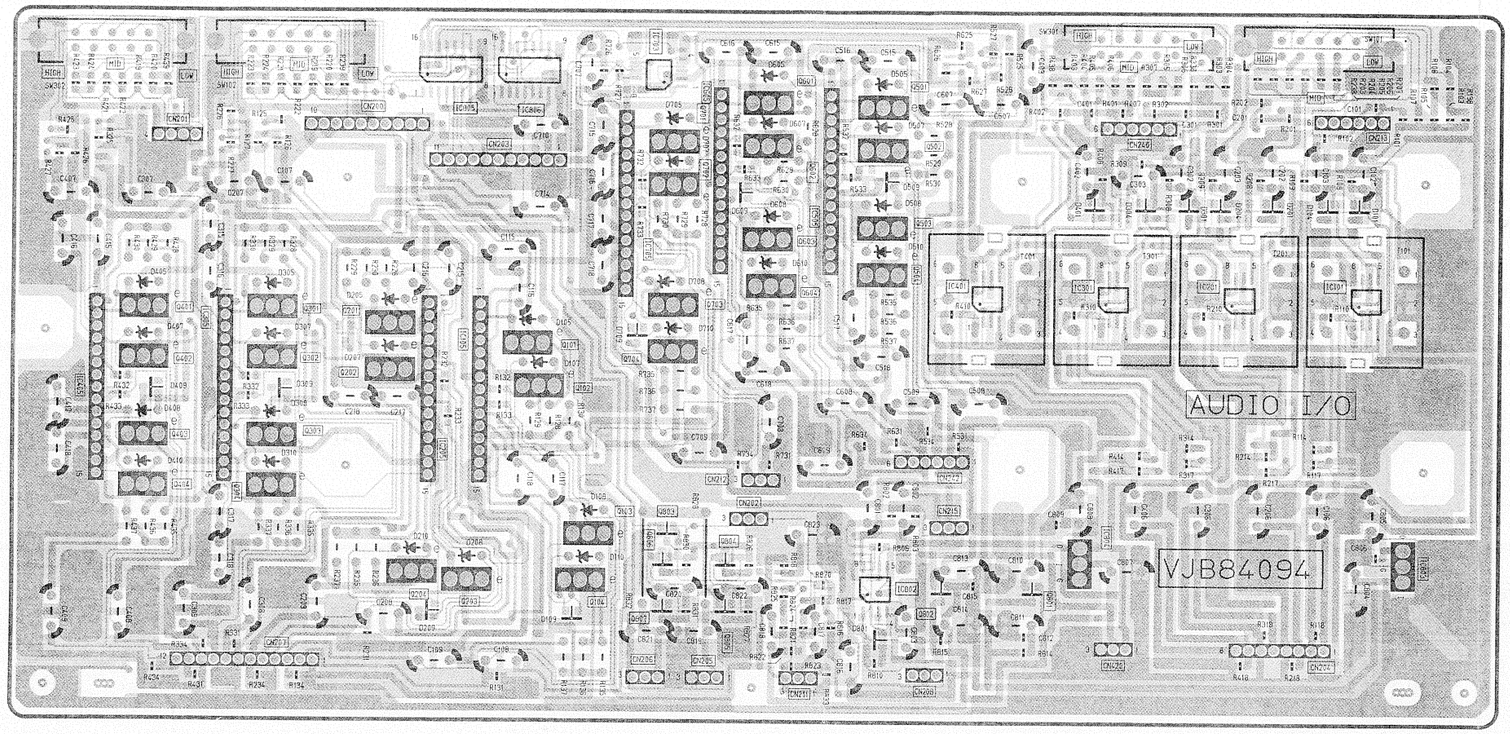

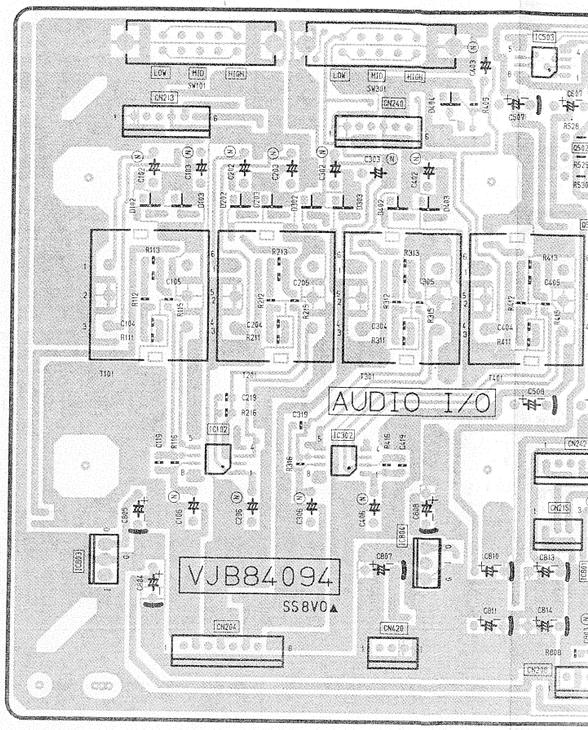

(FOIL SIDE)

(FOIL SIDE)

C-BOARD

	INTEGRATED CIRCUIT	
?-1	IC101	E-2
?-1	IC102	G-3
3-3		
3-4	CONNECTOR	
3-4	CN250	G-1
3-2	CN251	K-4
3-3	CN252	C-1
3-3	CN253	D-1
3-1	CN254	F-1
3-1		
3-1	P1	H-1
3-2	P3	E-1
3-2		

AUDIO I/O

FOIL SIDE								COMPONENT SIDE	
TRANSISTOR								INTEGRATED CIRCUIT	
Q101	C-3	Q504	C-5	IC301	C-6	CN206	A-4	IC102	B-10
Q102	C-3	Q601	D-5	IC305	C-2	CN207	A-2	IC103	D-15
Q103	B-4	Q602	D-5	IC401	C-6	CN208	A-5	IC302	B-10
Q104	B-4	Q603	C-5	IC405	C-1	CN211	A-5	IC303	D-16
Q201	C-3	Q604	C-5	IC505	C-5	CN212	B-5	IC503	D-11
Q202	C-3	Q701	D-4	IC605	D-4	CN213	D-8	IC704	D-13
Q203	B-3	Q702	D-4	IC703	D-4	CN215	B-6	IC801	B-12
Q204	B-3	Q703	C-4	IC705	C-4	CN240	D-6	IC808	B-12
Q301	C-2	Q704	C-4	IC802	B-5	CN242	B-5		
Q302	C-2	Q801	A-6	IC803	B-8	CN420	A-6		
Q303	B-2	Q802	A-5	IC804	B-6				
Q304	B-2	Q803	B-4	IC805	D-3				
Q401	C-2	Q804	B-4	IC806	D-3				
Q402	C-2	Q805	A-4						
Q403	B-2	Q806	B-4	CONNECTOR					
Q404	B-2	Q807	A-4	CN200	D-3				
Q501	D-5	INTEGRATED CIRCUIT		CN201	D-2				
Q502	D-5	IC101	C-8	CN202	B-5				
Q503	C-5	IC105	C-3	CN203	D-3				
		IC201	C-7	CN204	A-7				
		IC205	B-3	CN205	A-4				

ADDRESS INFORMATION

CHIP PART INFORMAT

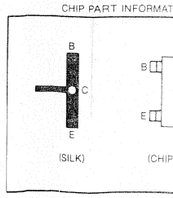

65H	AU-63H	AU-62H
094G	VEP84094C	VEP84094C
094G	VEP84094C	VEP84094C

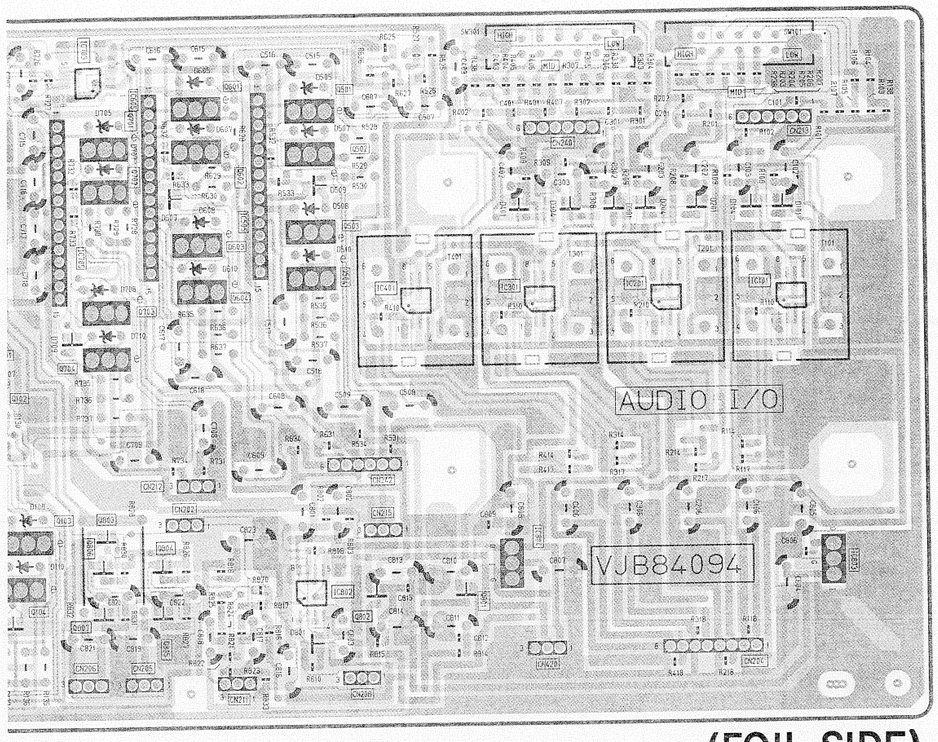

(FOIL SIDE)

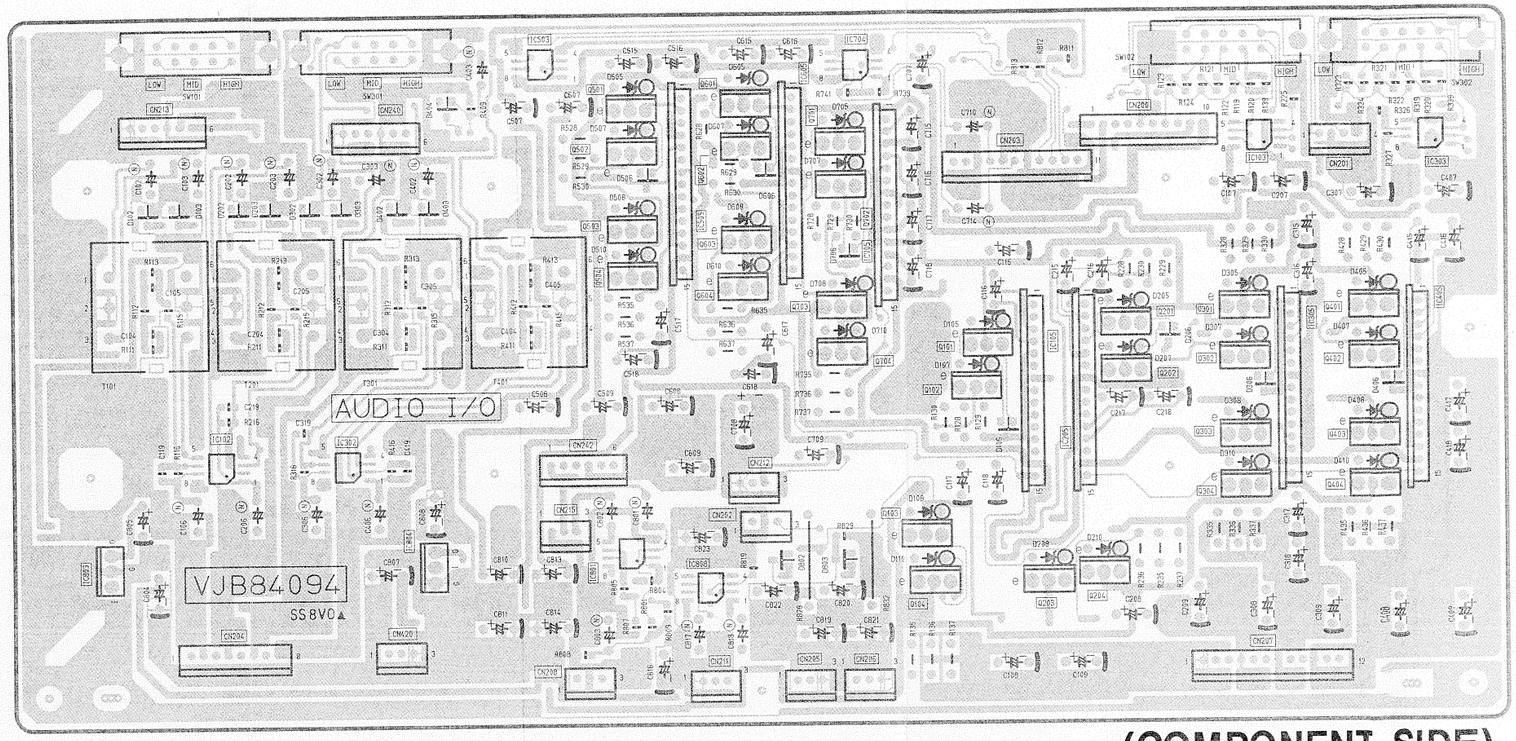

(COMPONENT SIDE)

4 5 6 7 8 9 10 11 12 13 14 15 16

AUDIO I/O

FOIL SIDE	
TRANSISTOR	
Q101	C-3
Q102	C-3
Q103	B-4
Q104	B-4
Q201	C-3
Q202	C-3
Q203	B-3
Q204	B-3
Q301	C-2
Q302	C-2
Q303	B-2
Q304	B-2
Q401	C-2
Q402	C-2
Q403	B-2
Q404	B-2
Q501	D-5
Q502	D-5
Q503	C-5
Q504	C-5
Q601	D-5
Q602	D-5
Q603	C-5
Q604	C-5
Q701	D-4
Q702	D-4
Q703	C-4
Q704	C-4
Q801	A-6
Q802	A-5
Q803	B-4
Q804	B-4
Q805	A-4
Q806	B-4
Q807	A-4
INTEGRATED CIRCUIT	
IC101	C-8
IC105	C-3
IC201	C-7
IC205	B-3
IC301	C-6
IC305	C-2
IC401	C-6
IC405	C-1
IC505	C-5
IC605	D-4
IC703	D-4
IC705	C-4
IC802	B-5
IC803	B-8
IC804	B-6
IC805	D-3
IC806	D-3
CONNECTOR	
CN200	D-3
CN201	D-2
CN202	B-5
CN203	D-3
CN204	A-7
CN205	A-4
CN206	A-4
CN207	A-2
CN208	A-5
CN211	A-5
CN212	B-5
CN213	D-8
CN215	B-6
CN240	D-6
CN242	B-5
CN420	A-6
COMPONENT SIDE	
INTEGRATED CIRCUIT	
IC102	B-10
IC103	D-15
IC302	B-10
IC303	D-16
IC503	D-11
IC704	D-13
IC801	B-12
IC808	B-12

ADDRESS INFORMATION

CHIP PART INFORMATION

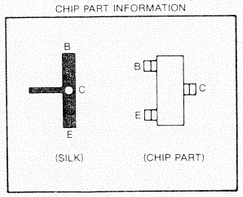

P.C. Board Location

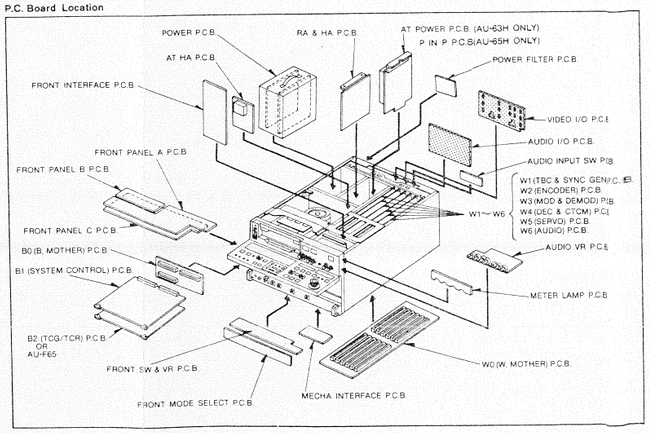

REVERSE SIDE

FRONT PANEL A P.C.BO
FRONT PANEL B P.C.BO

FRONT INTERFACE P.C.BOARD

TYPE \ MODEL	AU-65H	AU-63H	AU-62H
NTSC	VEP80553D	VEP80553C	VEP80553B
PAL	VEP80631D	VEP80631B	VEP80631C

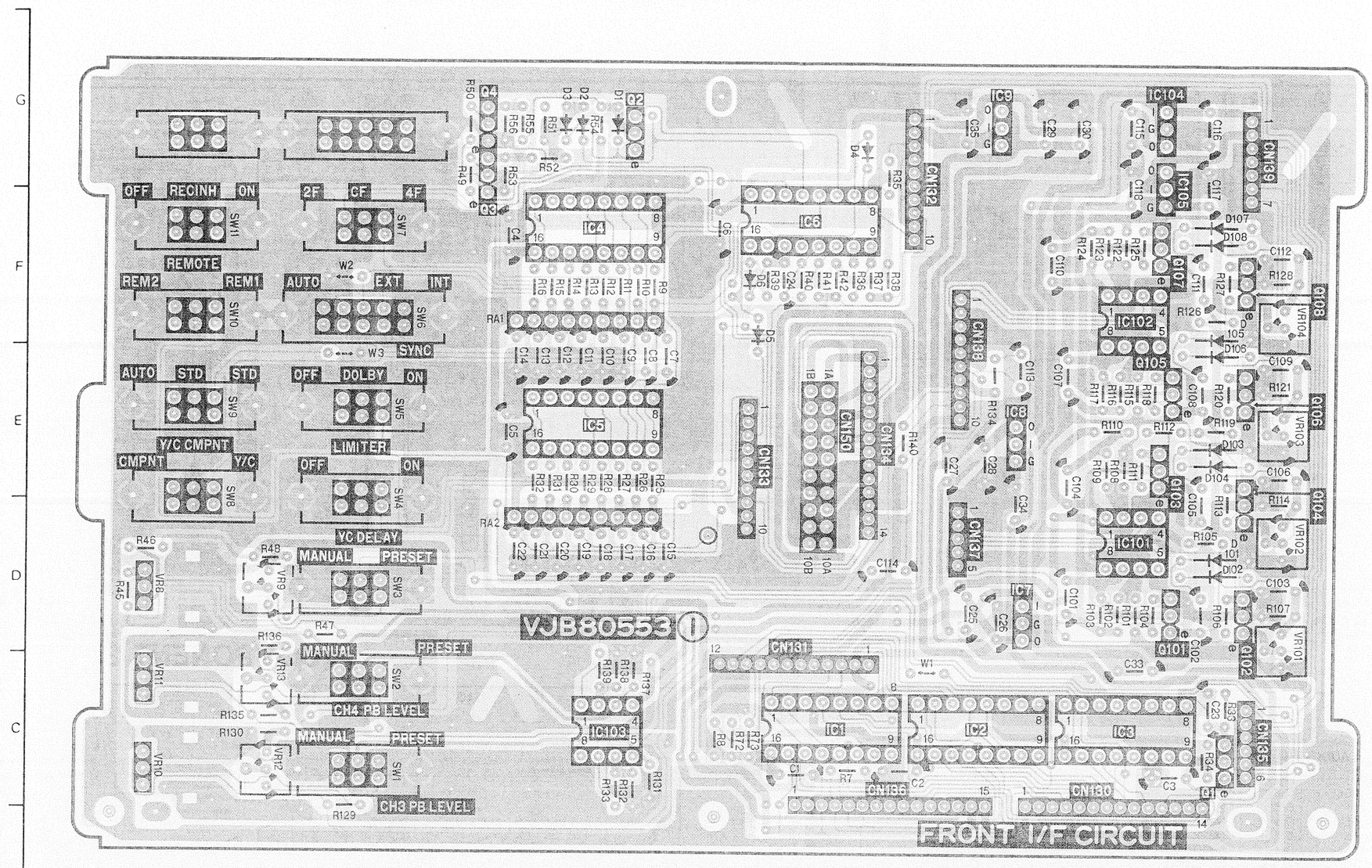

FRONT INTERFACE									
FOIL SIDE		Q105	E-8	IC6	F-5	VR9	D-2	CN134	E-6
TRANSISTOR		Q106	E-8	IC7	D-7	VR101	D-9	CN135	C-8
Q1	C-8	Q107	F-8	IC8	E-7	VR102	D-9	CN136	C-6
Q2	G-4	Q108	F-8	IC9	G-7	VR103	E-9	CN137	D-6
Q3	G-3	INTEGRATED CIRCUIT		IC101	D-8	VR104	F-9	CN138	E-6
Q101	G-3	ID1	C-6	IC102	F-8	CONNECTOR		CN139	G-8
Q102	D-8	IC2	C-7	IC104	G-8	CN130	C-7	CN150	E-6
Q103	D-8	IC3	C-8	IC105	G-8	CN131	C-5		
Q104	E-8	IC4	F-4	ADJUSTMENT		CN132	G-6		
	E-8	IC5	E-4	VR8	D-1	CN133	E-5		

ADDRESS INFORMATION

P.C. Board Location

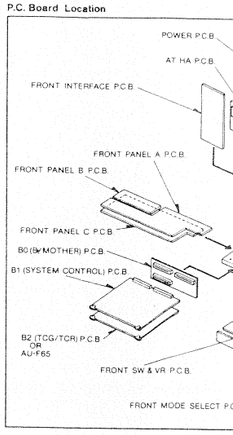

FRONT PANEL A P.C

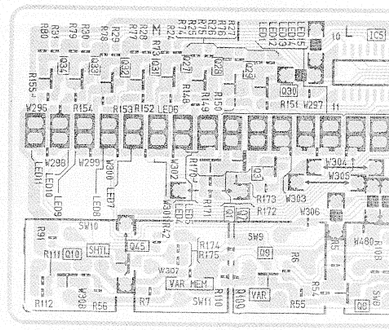

P.C. Board Location

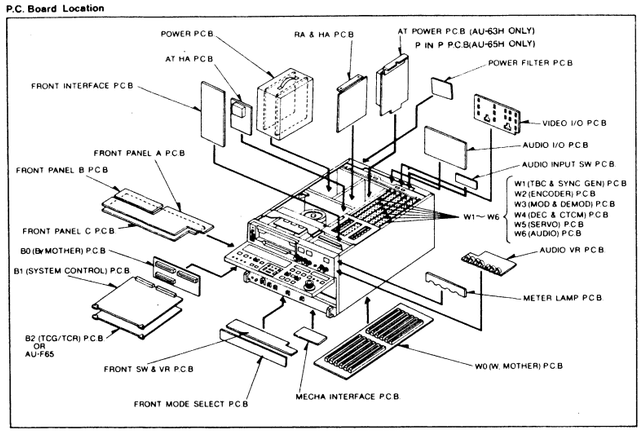

CHIP PART INFORMATION

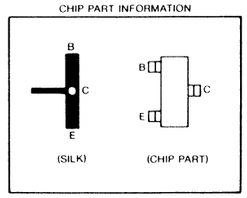

TYPE \ MODEL	AU-65H	AU-63H	AU-62H
NTSC	VEP86107A	VEP86086A	VEP86086A
PAL	VEP86107B	VEP86086A	VEP86086A

FRONT PANEL A P.C.BOARD(FOR AU-65H)

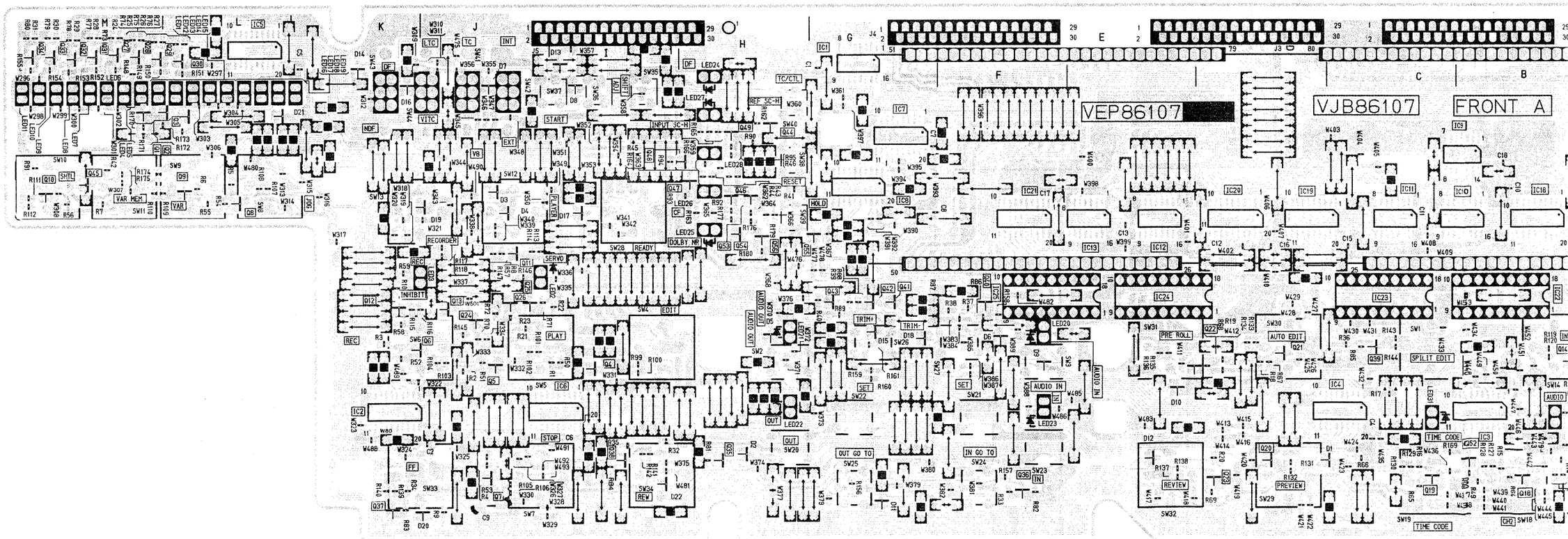

CHIP PART INFORMATION

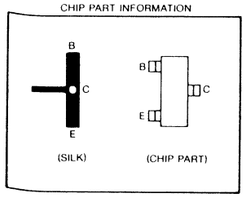

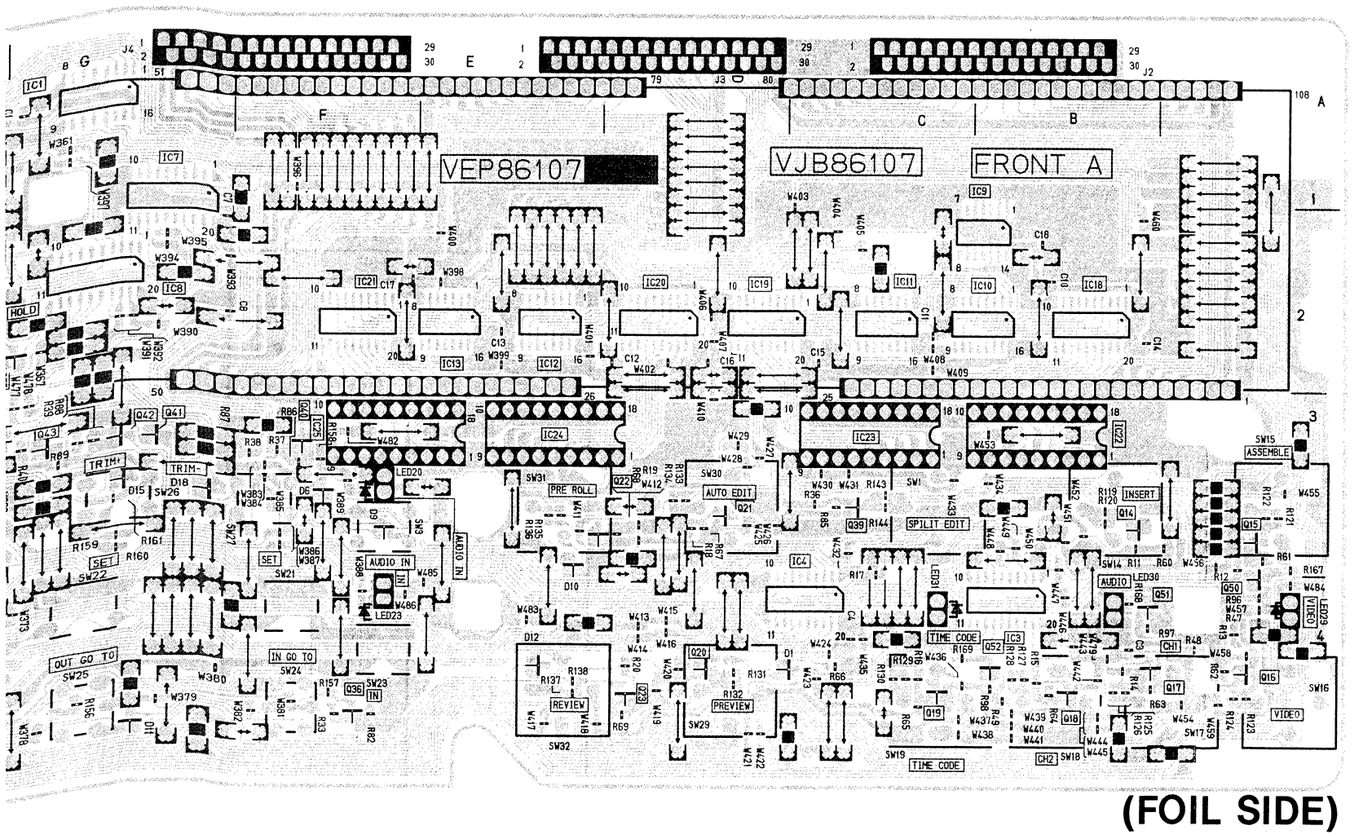

(FOIL SIDE)

FRONT PANEL A

FOIL SIDE

TRANSISTOR		Q47	H-2
Q1	M-1	Q48	H-2
Q2	L-1	Q49	H-1
Q3	L-1	Q50	A-4
Q4	I-3	Q51	B-4
Q5	J-3	Q52	B-4
Q6	J-3	Q53	H-2
Q7	J-4	Q54	H-2
Q8	L-2	Q55	G-2
Q9	L-2	Q56	H-2
Q10	M-2		
Q11	J-2	INTEGRATED CIRCUIT	
Q12	K-3		
Q13	J-3	IC1	G-1
Q14	B-3	IC2	K-4
Q15	A-3	IC3	B-4
Q16	A-4	IC4	C-4
Q17	B-4	IC5	L-1
Q18	B-4	IC6	I-4
Q19	C-4	IC7	G-1
Q20	D-4	IC8	G-2
Q21	D-3	IC9	B-2
Q22	D-3	IC10	B-2
Q23	D-4	IC11	C-2
Q24	J-3	IC12	E-2
Q25	J-3	IC13	E-2
Q26	J-3	IC19	D-2
Q27	M-1	IC20	D-2
Q28	M-1	IC21	F-2
Q29	L-1	IC22	B-3
Q30	L-1	IC23	C-3
Q31	M-1	IC24	E-3
Q32	M-1	IC25	F-3
Q33	M-1		
Q34	M-1		
Q35	H-4		
Q36	F-4		
Q37	K-4		
Q38	I-4		
Q39	C-3		
Q40	F-3		
Q41	G-3		
Q42	G-3		
Q43	G-3		
Q44	M-1		
Q45	H-2		
Q46	H-2		

FRONT PANEL B

FOIL SIDE

TRANSISTOR		IC31	B-1	J3	J-1
Q1	M-3	IC32	G-3	J4	G-1
Q2	M-3	IC33	N-3		
Q3	L-2	IC34	M-4		
Q4	D-4	IC36	N-4		
Q5	C-4	IC37	E-3		
Q6	L-3	IC38	A-1		
Q7	L-3	IC39	M-4		
Q8	K-3	IC40	H-2		
Q9	M-3	IC41	J-2		
Q10	G-2	IC42	J-2		
Q11	C-1	IC43	K-2		
Q100	C-2	IC44	K-2		
Q101	D-2	IC45	L-2		
		IC46	L-2		
INTEGRATED CIRCUIT		IC47	L-2		
		IC48	M-2		
IC1	H-4	IC49	M-2		
IC2	H-3	IC50	G-1		
IC3	G-2	IC51	H-1		
IC4	G-3	IC52	J-1		
IC5	F-3	IC53	K-1		
IC6	G-3	IC54	L-1		
IC7	E-3	IC55	M-1		
IC8	F-3	IC56	M-1		
IC9	E-3	IC57	M-1		
IC10	K-2	IC58	N-1		
IC11	C-1	IC59	N-2		
IC12	D-1				
IC13	J-3	TEST POINT			
IC14	J-3	TP1	J-4		
IC15	J-2	TP6	J-3		
IC16	H-2	TP7	J-2		
IC17	H-3	TP12	C-4		
IC18	H-2	TP13	D-4		
IC19	F-2	TP14	L-4		
IC20	M-3	TP15	K-3		
IC21	M-3				
IC22	N-3	ADJUSTMENT			
IC23	M-3	VR1	M-4		
IC24	M-3	VR2	L-3		
IC25	L-3				
IC26	L-4	CONNECTOR			
IC27	E-2	P150	B-1		
IC28	D-3				
IC29	E-1	J1	C-2		
IC30	K-2	J2	L-1		

FRONT PANEL B P.C.BOARD(FOR AU-65H)

TYPE \ MODEL	AU-65H	AU-63H	AU-62H
NTSC	VEP86108C	VEP86076E	VEP86076E
PAL	VEP86108D	VEP86076F	VEP86076F

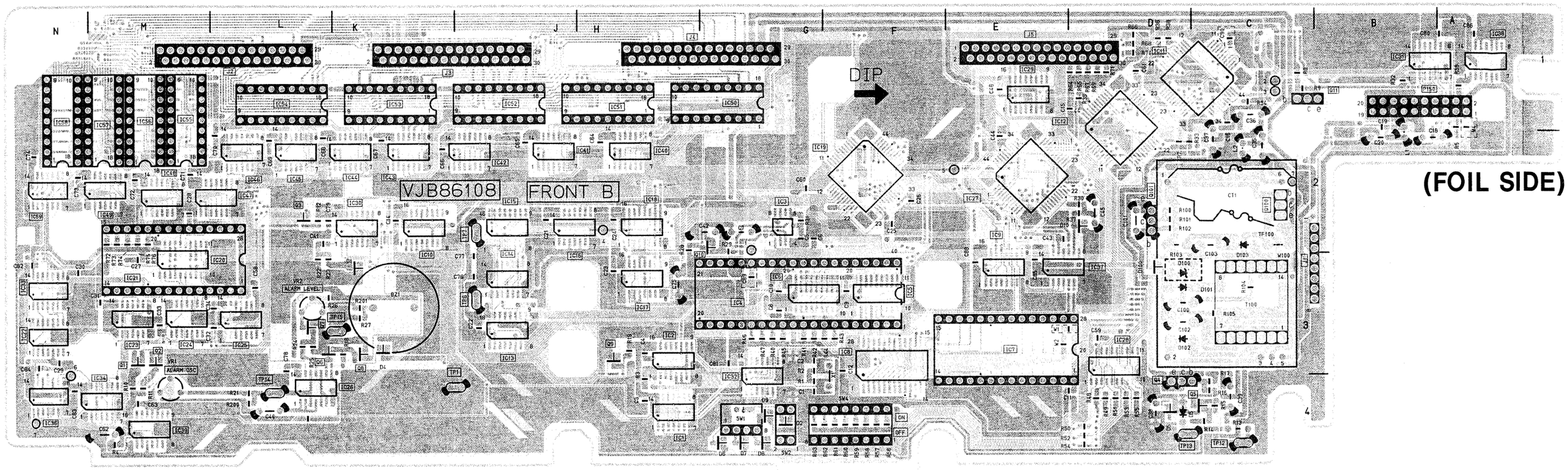

(FOIL SIDE)

(COMPONENT SIDE)

5H	AU-63H	AU-62H
08C	VEP86076E	VEP86076E
08D	VEP86076F	VEP86076F

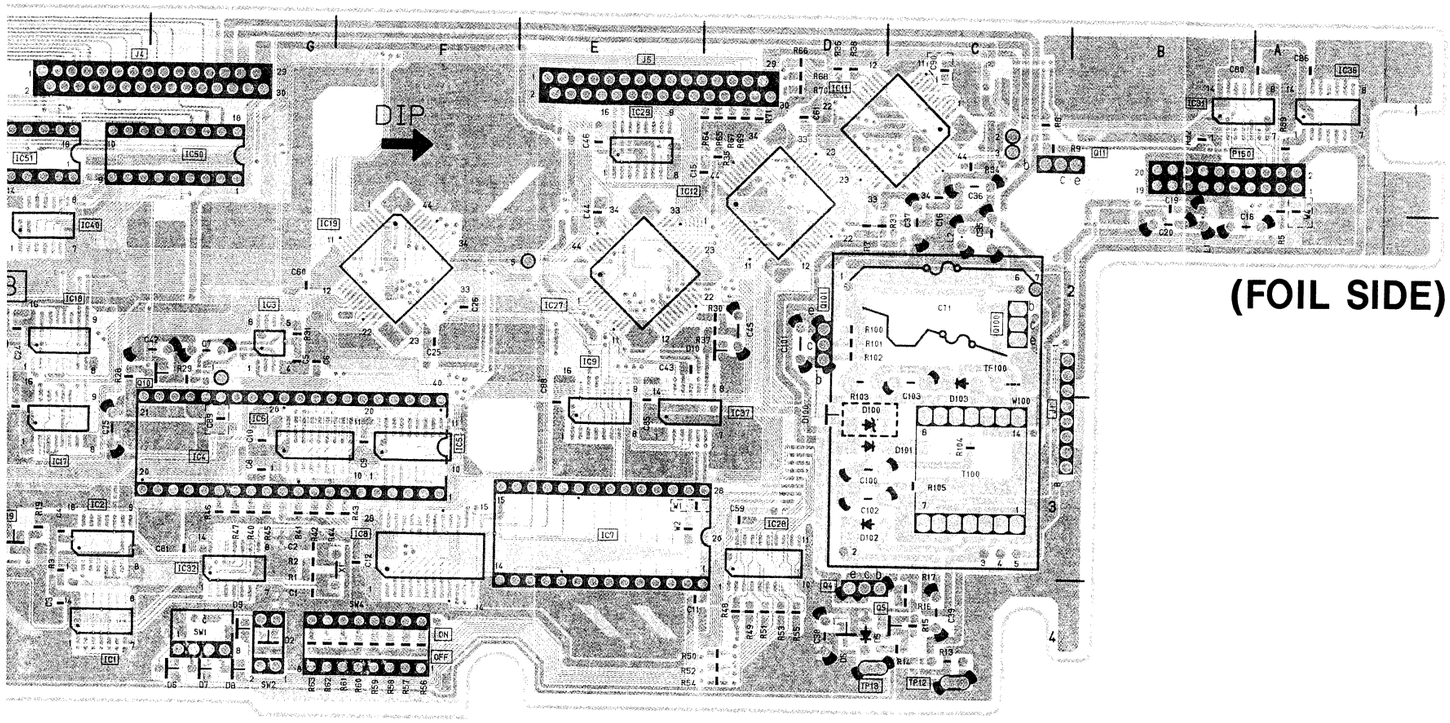

(FOIL SIDE)

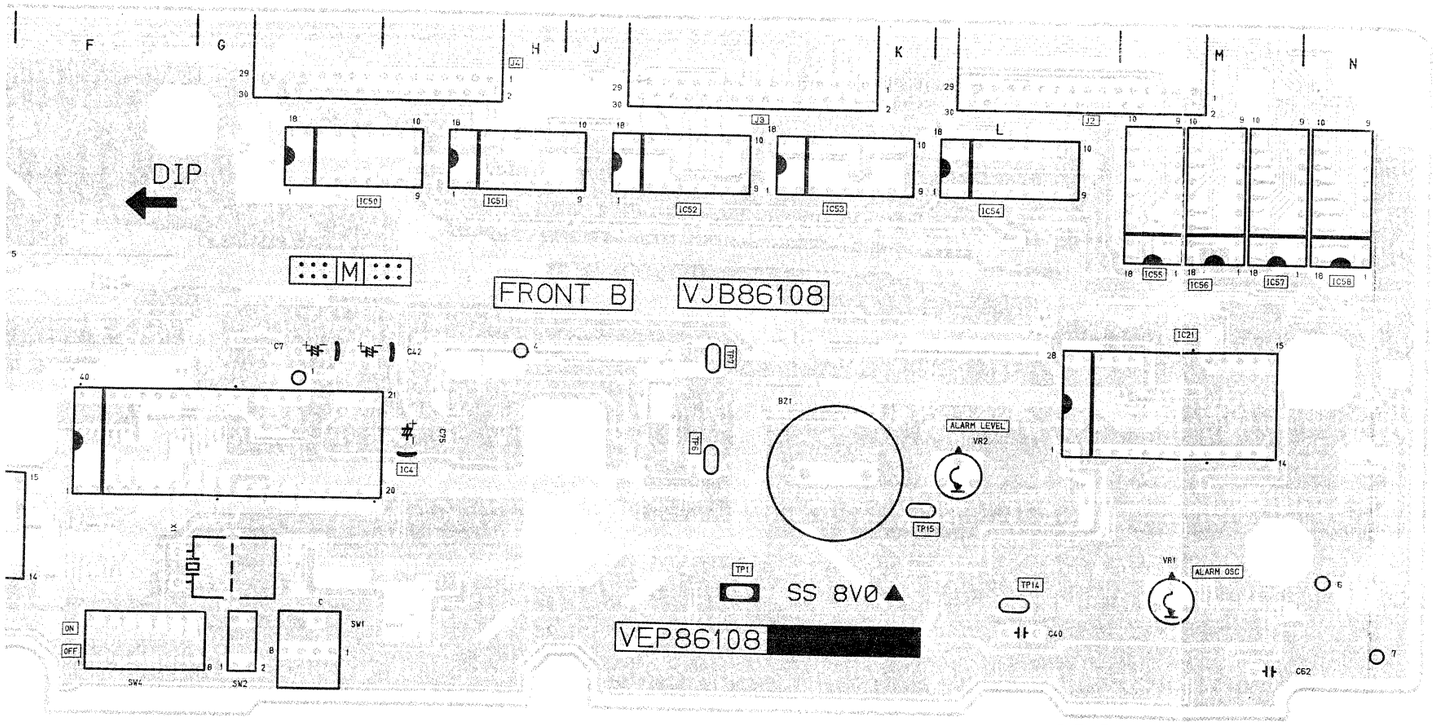

(COMPONENT SIDE)

FRONT PANEL B P.
METER CHANGE SW
METER LAMP P.C.B

TYPE \ MODEL	AU-65H	AU-63H	AU-62H
NTSC	VEP80083B	———	———
PAL	VEP80083B	———	———

METER CHANGE SW P.C.BOARD

(FOIL SIDE)

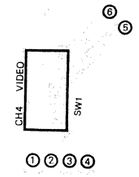

TYPE \ MODEL	AU-65H	AU-63H	AU-62H
NTSC	VEP80333C	VEP80333B	VEP80333B
PAL	VEP80333C	VEP80333B	VEP80333B

METER LAMP P.C.BOARD

(FOIL SIDE)

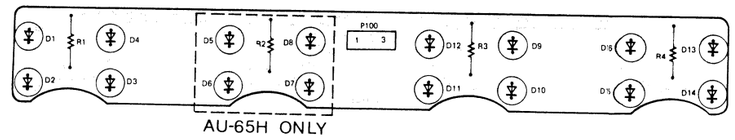

CHIP PART INFORMATION

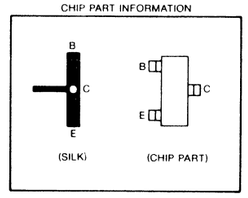

P.C. Board Location

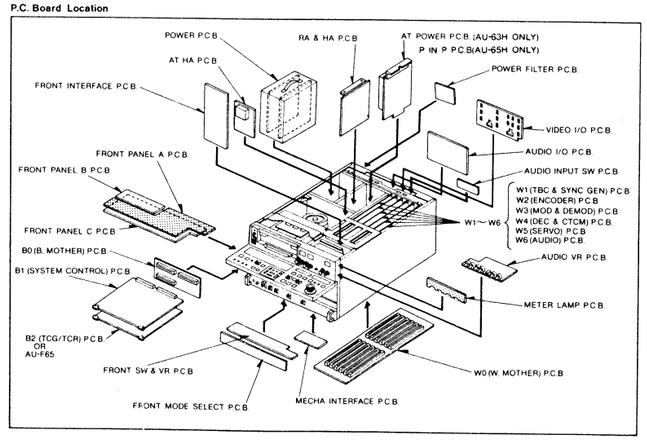

PARTS LISTS

- **Electrical Parts Lists**
- **Exploded Views**
- **Mechanical Parts Lists**

This section provides the exploded views, mechanical parts lists and electrical parts lists.

N o t e :

1. *Be sure to make your orders of replacement parts according to this list.
2. Unless ohterwise specified, all resistors are in OHMS, K = 1,000 OHMS, all capacitors are in MICROFARADS (uF), P = uuF.
3. The P.C.Board units marked with "■" show below the main assembled parts.
4. The parts marked with E on the exploded view show the electric parts.
5. IMPORTANT SAFETY NOTICE
   Components identified with the mark <!> have the special characteristics for safety. When replacing any of these components, use only the same type.

<< Abbreviations for parts >>

< NAME >	< DESCRIPTIONS >
C.CAPACITOR	: CERAMIC CAPACITOR
C.CAPACITOR CH	: CERAMIC CHIP CAPACITOR
E.CAPACITOR	: ELECTROLYTIC CAPACITOR
G.CAPACITOR	: GLASS CAPACITOR
M.CAPACITOR	: MICA CAPACITOR
P.CAPACITOR	: PLASTIC FILM CAPACITOR
S.CAPACITOR	: SEMI-CONDUCTOR CAPACITOR
T.CAPACITOR	: TANTALUM CAPACITOR
TRIMMER	: TRIMMER
C.RESISTOR	: CARBON RESISTOR
F.RESISTOR	: FUSE RESISTOR
M.RESISTOR	: METAL OXSIDE RESISTOR
M.RESISTOR CH	: METAL OXSIDE CHIP RESISTOR
S.RESISTOR	: SOLID RESISTOR
V.RESISTOR	: VARIABLE RESISTOR
W.RESISTOR	: WIRE WOUND RESISTOR
COMBI.TR-R	: TRANSISTOR-RESISTOR COMBINATION PARTS
COMBI.R-R	: RESISTOR-RESISTOR COMBINATION PARTS
COMBI.C-R	: CAPACITOR-RESISTOR COMBINATION PARTS
COMBI.C-R-R	: CAPACITOR-RESISTOR-COIL COMBINATION P
P.C.BOARD	: PRINTED CIRCUIT BOARD
W/COMPONENT	: WITH COMPONENT

Panasonic

CONTENTS

P.C.BOARDS LIST 1
W0 MOTHER1(AU-65H) 5
W0 MOTHER1(AU-63H) 5
W0 MOTHER1(AU-62H) 5
W1 TBC & SYNC GEN(AU-65H/63H/62H) 7
W1 TBC SUB 7
W2 ENCODER(AU-65H) 12
W2 SUB 12
W2 ENCODER(AU-63H) 20
W2 SUB 20
W2 ENCODER(AU-62H) 28
W2 SUB 28
W3 MOD & DEMOD(AU-65H) 36
W3 MOD & DEMOD(AU-63H) 44
W3 MOD & DEMOD(AU-62H) 50
W4 DEC & CTCM(AU-65H) 56
W5 SERVO(AU-65H/62H) 63
W5 SERVO(AU-63H) 68
W6 AUDIO(AU-65H) 75
W6 AUDIO(AU-63H/62H) 82
B0 MOTHER2(AU-65H) 86
B0 MOTHER2(AU-63H) 86
B0 MOTHER2(AU-62H) 86
B1 SYSTEM CONTROL(AU-65H) 86
B1 SYSTEM CONTROL(AU-63H) 90
B1 SYSTEM CONTROL(AU-62H) 93
B2 TCG/TCR(AU-65H/63H/62H) 96
AT POWER(AU-63H) 98
AUDIO INPUT SW(AU-65H) 98
AUDIO IN/OUT(AU-65H) 99
AUDIO IN/OUT SUB 99
AUDIO IN/OUT(AU-63H/62H) 101
AUDIO IN/OUT SUB 101
AUDIO VR(AU-65H) 102
AUDIO VR(AU-63H) 103
AUDIO VR(AU-62H) 104
AUTO OFF LED(AU-65H/63H/62H) 104
CASSETTE CARRIIAGE LAMP(AU-65H/63H/62H) 104
CASSETTE DETECT(AU-65H/63H/62H) 104
EJECT INTERFACE(AU-65H/63H/62H) 104
EJECT SW(AU-65H/63H/62H) 104
FRONT INTERFACE(AU-65H) 105
FRONT INTERFACE(AU-63H) 106
FRONT INTERFACE(AU-62H) 107
FRONT LOADING(AU-65H/63H/62H) 108
FRONT MODE SELECT(AU-65H) 108

FRONT MODE SELECT(AU-63H) 108
FRONT MODE SELECT(AU-62H) 109
FRONT PANEL A(AU-65H) 109
FRONT PANEL A(AU-63H/62H) 110
FRONT PANEL B(AU-65H) 112
FRONT PANEL B(AU-63H/62H) 113
FRONT SW VR(AU-65H/63H/62H) 114
HEADPHONE VR(AU-65H/63H/62H) 114
LOADING PHOTO (AU-65H/63H/62H) 115
MECHA INTERFACE CIRCUIT(AU-65H/63H/62H) 115
METER CHANGE SW(AU-65H) 116
METER LAMP(AU-65H) 116
METER LAMP(AU-63H/62H) 116
PICTURE IN PICTURE(AU-65H) 116
POWER FILTER (AU-65H/63H/62H) 119
POWER SUPPLY UNIT(AU-65H/63H/62H) 120
RA & HA(AU-65H) 121
PA & HA(AU-63H) 124
PA & HA(AU-62H) 125
TR SENSOR(1)(AU-65H/63H/62H) 126
TR SENSOR(2)(AU-65H/63H/62H) 126
UNLOADING PHOTO(AU-65H/63H/62H) 126
VIDEO IN/OUT(AU-65H) 126
VIDEO IN/OUT(AU-63H/AU-62H) 127
VIDEO VR(AU-65H) 128
YC IN/OUT(AU-65H/63H/62H) 129
9P REMOTE(AU-65H/63H/62H) 129

MECHANICAL REPLACEMENT PARTS LIST

CASING FRAME ASSEMBLY 131
MECHANICAL CHASSIS ASSEMBLY(1) 132
MECHANICAL CHASSIS ASSEMBLY(2) 134
MECHANICAL CHASSIS ASSEMBLY(3) 136
MECHANICAL CHASSIS ASSEMBLY(4) 138
FRONT PANEL ASSEMBLY(AU-65H) 140
FRONT PANEL ASSEMBLY(AU-63H/AU-62H) 142
REAR JACK PANEL ASSEMBLY 144
CHASSIS FRAME ASSEMBLY 146
CASSETTE COMPARTMENT ASSEMBLY 148
PACKING 150
SERVICING FIXTURES & TOOLS LIST 151

P.C.BOARDS LIST (TREE STYLE)

P.C.BOARD NAME	VEP NUMBER (AU-65H PAL)	VEP NUMBER (AU-63H PAL)	VEP NUMBER (AU-62H PAL)
1. W0 MOTHER 1	VEP80765A	VEP80765C	VEP80765B
2. W1 TBC & SYNCGEN	VEP88091C	VEP88091C	VEP88091C
3. W1 TBC SUB	VEP80681A	VEP80681A	VEP80681A
4. W2 ENCODER	VEP88063M	VEP88063N	VEP88063Q
5. W2 SUB	VEP80632A	VEP80632A	VEP80632A
6. W3 MOD & DEMOD	VEP83098E	VEP83098F	VEP83098G
7. W4 DEC & CTCM	VEP83173A	-----	-----
8. W5 SERVO	VEP82061E	VEP82061F	VEP82061E
9. W6 AUDIO	VEP84095K	VEP84095E	VEP84095E
10. B0 MOTHER 2	VEP80549H	VEP80549K	VEP80549J
11. B1 SYSTEM CONTROL	VEP86121D	VEP86121F	VEP86121E
12. B2 TCG/TCR	VEP86089C	VEP86089C	VEP86089C
13. AT H.A	-----	-----	-----
14. AT POWER	-----	VEP82062A	-----
15. AUDIO INPUT SW	VEP84103A	-----	-----
16. AUDIO IN/OUT	VEP84094G	VEP84094C	VEP84094C
17. AUDIO IN/OUT SUB	VEP80573A	VEP80573A	VEP80573A
18. AUDIO VR	VEP84102A	VEP84101C	VEP84101B
19. AUTO OFF LED	VEP00E08C	VEP00E08C	VEP00E08C
20. CASSETTE CARRIAGE LAMP	VEP00E72A	VEP00E72A	VEP00E72A
21. CASSETTE DETECT	VEP00E30A	VEP00E30A	VEP00E30A
22. EJECT INTERFACE	VEP80422B	VEP80422B	VEP80422B
23. EJECT SW	VEP80232A	VEP80232A	VEP80232A
24. FRONT INTERFACE	VEP80631D	VEP80631B	VEP80631C
25. FRONT LOADING	VEP80440A	VEP80440A	VEP80440A
26. FRONT MODE SELECT	VEP80559A	VEP80559D	VEP80559C
27. FRONT PANEL A	VEP86107B	VEP86086A	VEP86086A
28. FRONT PANEL B	VEP86108D	VEP86076F	VEP86076F
29. FRONT PANEL C	-----	-----	-----
30. FRONT SW VR	VEP80552A	VEP80552A	VEP80552A
31. HEADPHONE VR	VEP80616A	VEP80616A	VEP80616A
32. LOADING PHOTO	VEP00E04B	VEP00E04B	VEP00E04B
33. MECHA INTERFACE CIRCUIT	VEP80550B	VEP80550B	VEP80550B
34. METER CHANGE SW	VEP80083B	-----	-----
35. METER LAMP	VEP80333C	VEP80333B	VEP80333B
36. PICTURE IN PICTURE	VEP83170B	-----	-----
37. POWER FILTER	VEP81058A	VEP81058A	VEP81058A
38. POWER SUPPLY UNIT	VYK3637	VYK3637	VYK3637
39. RA & HA	VEP85015D	VEP85015F	VEP85015E
40. TR SENSOR (1)	VEP00E27C	VEP00E27C	VEP00E27C
41. TR SENSOR (2)	VEP00E28C	VEP00E28C	VEP00E28C
42. UNLOADING PHOTO	VEP00E25C	VEP00E25C	VEP00E25C
43. VIDEO/CH4 METER SW	-----	-----	-----
44. VIDEO IN/OUT	VEP83174C	VEP83174B	VEP83174B
45. VIDEO VR	VEP80621A	-----	-----
46. YC IN/OUT	VEP80574A	VEP80574A	VEP80574A
47. 9P REMOTE	VEP80551A	VEP80551A	VEP80551A
48. 50P REMOTE	-----	-----	-----

P.C.BOARDS LIST (TREE STYLE)

P.C.BOARD NAME	VEP NUMBER (AU-65 PAL)	VEP NUMBER (AU-63 PAL)	VEP NUMBER (AU-62 PAL)
1. W0 MOTHER 1	VEP80548A	VEP80548D	VEP80548C
2. W1 TBC & SYNCGEN	VEP88062C	VEP88062C	VEP88062C
3. W1 TBC SUB	-----	-----	-----
4. W2 ENCODER	VEP88063C	VEP88063C	VEP88063C
5. W2 SUB	VEP80632A	VEP80632A	VEP80632A
6. W3 MOD & DEMOD	VEP83098E	VEP83098F	VEP83098G
7. W4 DEC & CTCM	VEP83099B	-----	-----
8. W5 SERVO	VEP82061E	VEP82061F	VEP82061E
9. W6 AUDIO	VEP84095D	VEP84095E	VEP84095E
10. B0 MOTHER 2	VEP80549A	VEP80549B	VEP80549A
11. B1 SYSTEM CONTROL	VEP86088E	VEP86088F	VEP86088M
12. B2 TCG/TCR	-----	-----	-----
13. AT H.A	-----	-----	-----
14. AT POWER	-----	VEP82062A	-----
15. AUDIO INPUT SW	-----	-----	-----
16. AUDIO IN/OUT	VEP84094A	VEP84094C	VEP84094C
17. AUDIO IN/OUT SUB	VEP80573A	VEP80573A	VEP80573A
18. AUDIO VR	VEP84101A	VEP84101C	VEP84101B
19. AUTO OFF LED	VEP00E08C	VEP00E08C	VEP00E08C
20. CASSETTE CARRIAGE LAMP	VEP00E72A	VEP00E72A	VEP00E72A
21. CASSETTE DETECT	VEP00E30A	VEP00E30A	VEP00E30A
22. EJECT INTERFACE	VEP80422B	VEP80422B	VEP80422B
23. EJECT SW	VEP80232A	VEP80232A	VEP80232A
24. FRONT INTERFACE	VEP80631A	VEP80631B	VEP80631C
25. FRONT LOADING	VEP80440A	VEP80440A	VEP80440A
26. FRONT MODE SELECT	VEP80559A	VEP80559D	VEP80559C
27. FRONT PANEL A	VEP86050D	VEP86086A	VEP86086A
28. FRONT PANEL B	VEP66022A	VEP86076D	VEP86076D
29. FRONT PANEL C	VEP86048G	-----	-----
30. FRONT SW VR	VEP80552A	VEP80552A	VEP80552A
31. HEADPHONE VR	VEP80616A	VEP80616A	VEP80616A
32. LOADING PHOTO	VEP00E04B	VEP00E04B	VEP00E04B
33. MECHA INTERFACE CIRCUIT	VEP80550A	VEP80550A	VEP80550A
34. METER CHANGE SW	-----	-----	-----
35. METER LAMP	VEP80333B	VEP80333B	VEP80333B
36. PICTURE IN PICTURE	-----	-----	-----
37. POWER FILTER	VEP81058A	VEP81058A	VEP81058A
38. POWER SUPPLY UNIT	VYK3637	VYK3637	VYK3637
39. RA & HA	VEP85015D	VEP85015F	VEP85015E
40. TR SENSOR (1)	VEP00E27C	VEP00E27C	VEP00E27C
41. TR SENSOR (2)	VEP00E28C	VEP00E28C	VEP00E28C
42. UNLOADING PHOTO	VEP00E25C	VEP00E25C	VEP00E25C
43. VIDEO/CH4 METER SW	-----	-----	-----
44. VIDEO IN/OUT	VEP83097C	VEP83097B	VEP83097B
45. VIDEO VR	-----	-----	-----
46. YC IN/OUT	VEP80574A	VEP80574A	VEP80574A
47. 9P REMOTE	VEP80551A	VEP80551A	VEP80551A
48. 50P REMOTE	-----	-----	-----

ELECTRICAL REPLACEMENT PARTS LIST

Ref.No.	Part No.	Part Name & Description	Pcs	Remarks
	VEP80765A	P.C.BOARD W/COMPONENT	1	FOR AU-65H
		W0 MOTHER 1		
	VEP80765C	P.C.BOARD W/COMPONENT	1	FOR AU-63H
		W0 MOTHER 1		
	VEP80765B	P.C.BOARD W/COMPONENT	1	FOR AU-62H
		W0 MOTHER 1		
	VEP88091C	P.C.BOARD W/COMPONENT	1	FOR AU-65H,AU-63H
		W1 TBC & SYNVGEN		AU-62H
	VEP80681A	P.C.BOARD W/COMPONENT	1	ON VEP88091C
		W1 TBC SUB		
	VEP88063M	P.C.BOARD W/COMPONENT	1	FOR AU-65H
		W2 ENCODER		
	VEP80632A	P.C.BOARD W/COMPONENT	1	ON VEP88063M
		W2 SUB		
	VEP88063N	P.C.BOARD W/COMPONENT	1	FOR AU-63H
		W2 ENCODER		
	VEP80632A	P.C.BOARD W/COMPONENT	1	ON VEP88063N
		W2 SUB		
	VEP88063Q	P.C.BOARD W/COMPONENT	1	FOR AU-62H
		W2 ENCODER		
	VEP80632A	P.C.BOARD W/COMPONENT	1	ON VEP88063Q
		W2 SUB		
	VEP83098E	P.C.BOARD W/COMPONENT	1	FOR AU-65H
		W3 MOD & DEMOD		
	VEP83098F	P.C.BOARD W/COMPONENT	1	FOR AU-63H
		W3 MOD & DEMOD		
	VEP83098G	P.C.BOARD W/COMPONENT	1	FOR AU-62H
		W3 MOD & DEMOD		
	VEP83173A	P.C.BOARD W/COMPONENT	1	FOR AU-65H
		W4 DEC & CTCM		
	VEP82061E	P.C.BOARD W/COMPONENT	1	FOR AU-65H,AU-62H
		W5 SERVO		
	VEP82061F	P.C.BOARD W/COMPONENT	1	FOR AU-63H
		W5 SERVO		
	VEP84095K	P.C.BOARD W/COMPONENT	1	FOR AU-65H
		W6 AUDIO		
	VEP84095E	P.C.BOARD W/COMPONENT	1	FOR AU-63H,AU-62H
		W6 AUDIO		
	VEP80549H	P.C.BOARD W/COMPONENT	1	FOR AU-65H
		B0 MOTHER 2		
	VEP80549K	P.C.BOARD W/COMPONENT	1	FOR AU-63H
		B0 MOTHER 2		
	VEP80549J	P.C.BOARD W/COMPONENT	1	FOR AU-62H
		B0 MOTHER 2		
	VEP86121D	P.C.BOARD W/COMPONENT	1	FOR AU-65H
		B1 SYSTEM CONTROL		
	VEP86121F	P.C.BOARD W/COMPONENT	1	FOR AU-63H
		B1 SYSTEM CONTROL		
	VEP86121E	P.C.BOARD W/COMPONENT	1	FOR AU-62H
		B1 SYSTEM CONTROL		
	VEP86089C	P.C.BOARD W/COMPONENT	1	FOR AU-65H,AU-63H
		B2 TCG/TCR		AU-62H
	VEP82062A	P.C.BOARD W/COMPONENT	1	FOR AU-63H
		AT POWER		
	VEP84103A	P.C.BOARD W/COMPONENT	1	FOR AU-65H
		AUDIO INPUT SW		
	VEP84094G	P.C.BOARD W/COMPONENT	1	FOR AU-65H
		AUDIO IN/OUT		
	VEP80573A	P.C.BOARD W/COMPONENT	1	ON VEP84094G
		AUDIO IN/OUT SUB		
	VEP84094C	P.C.BOARD W/COMPONENT	1	FOR AU-63H,AU-62H
		AUDIO IN/OUT		
	VEP80573A	P.C.BOARD W/COMPONENT	1	ON VEP84094C
		AUDIO IN/OUT		

Ref.No.	Part No.	Part Name & Description	Pcs	Remarks
	VEP84102A	P.C.BOARD W/COMPONENT	1	FOR AU-65H
		AUDIO VR		
	VEP84101C	P.C.BOARD W/COMPONENT	1	FOR AU-63H
		AUDIO VR		
	VEP84101B	P.C.BOARD W/COMPONENT	1	FOR AU-62H
		AUDIO VR		
	VEP00E08C	P.C.BOARD W/COMPONENT	1	FOR AU-65H,AU-63H
		AUTO OFF LED		AU-62H
	VEP00E72A	P.C.BOARD W/COMPONENT	1	FOR AU-65H,AU-63H
		CASSETTE CARRIAGE LAMP		AU-62H
	VEP00E30A	P.C.BOARD W/COMPONENT	1	FOR AU-65H,AU-63H
		CASSETTE DETECT		AU-62H
	VEP80422B	P.C.BOARD W/COMPONENT	1	FOR AU-65H,AU-63H
		EJECT INTERFACE		AU-62H
	VEP80232A	P.C.BOARD W/COMPONENT	1	FOR AU-65H,AU-63H
		EJECT SW		AU-62H
	VEP80631D	P.C.BOARD W/COMPONENT	1	FOR AU-65H
		FRONT INTERFACE		
	VEP80631B	P.C.BOARD W/COMPONENT	1	FOR AU-63H
		FRONT INTERFACE		
	VEP80631C	P.C.BOARD W/COMPONENT	1	FOR AU-62H
		FRONT INTERFACE		
	VEP80440A	P.C.BOARD W/COMPONENT	1	FOR AU-65H,AU-63H
		FRONT LOACINT		AU-62H
	VEP80559A	P.C.BOARD W/COMPONENT	1	FOR AU-65H
		FRONT MODE SELECT		
	VEP80559D	P.C.BOARD W/COMPONENT	1	FOR AU-63H
		FRONT MODE SELECT		
	VEP80559C	P.C.BOARD W/COMPONENT	1	FOR AU-62H
		FRONT MODE SELECT		
	VEP86107B	P.C.BOARD W/COMPONENT	1	FOR AU-65H
		FRONT PANEL A		
	VEP86086A	P.C.BOARD W/COMPONENT	1	FOR AU-63H,AU-62H
		FRONT PANEL A		
	VEP86108D	P.C.BOARD W/COMPONENT	1	FOR AU-65H
		FRONT PANEL B		
	VEP86076F	P.C.BOARD W/COMPONENT	1	FOR AU-63H,AU-62H
		FRONT PANEL B		
	VEP80552A	P.C.BOARD W/COMPONENT	1	FOR AU-65H,AU-63H
		FRONT SW VR		AU-62H
	VEP80616A	P.C.BOARD W/COMPONENT	1	FOR AU-65H,AU-63H
		HEADPHONE VR		AU-62H
	VEP00E04B	P.C.BOARD W/COMPONENT	1	FOR AU-65H,AU-63H
		LOADING PHOTO		AU-62H
	VEP80550B	P.C.BOARD W/COMPONENT	1	FOR AU-65H,AU-63H
		MECHA INTERFACE CIRCUIT		AU-62H
	VEP80083B	P.C.BOARD W/COMPONENT	1	FOR AU-65H
		METER CHANGE SW		
	VEP80333C	P.C.BOARD W/COMPONENT	1	FOR AU-65H
		METER LAMP		
	VEP80333B	P.C.BOARD W/COMPONENT	1	FOR AU-63H,AU-62H
		METER LAMP		
	VEP83170B	P.C.BOARD W/COMPONENT	1	FOR AU-65H
		PICTURE IN PICTURE		
	VEP81058A	P.C.BOARD W/COMPONENT	1	FOR AU-65H,AU-63H
		POWER FILTER		AU-62H

Ref.No.	Part No.	Part Name & Description	Pcs	Remarks
	VYK3637	P.C.BOARD W/COMPONENT	1	FOR AU-65H,AU-63H
		POWER SUPPLY UNIT		AU-62H
	VEP85015D	P.C.BOARD W/COMPONENT	1	FOR AU-65H
		RA & HA		
	VEP85015F	P.C.BOARD W/COMPONENT	1	FOR AU-63H
		RA & HA		
	VEP85015E	P.C.BOARD W/COMPONENT	1	FOR AU-62H
		RA & HA		
	VEP00E27C	P.C.BOARD W/COMPONENT	1	FOR AU-65H,AU-63H
		TR SENSOR (1)		AU-62H
	VEP00E28C	P.C.BOARD W/COMPONENT	1	FOR AU-65H,AU-63H
		TR SENSOR (2)		AU-62H
	VEP00E25C	P.C.BOARD W/COMPONENT	1	FOR AU-65H,AU-63H
		UNLOADING PHOTO		AU-62H
	VEP83174C	P.C.BOARD W/COMPONENT	1	FOR AU-65H
		VIDEO IN/OUT		
	VEP83174B	P.C.BOARD W/COMPONENT	1	FOR AU-63H,AU-62H
		VIDEO IN/OUT		
	VEP80621A	P.C.BOARD W/COMPONENT	1	FOR AU-65H
		VIDEO VR		
	VEP80574A	P.C.BOARD W/COMPONENT	1	FOR AU-65H,AU-63H
		YC IN/OUT		AU-62H
	VEP80551A	P.C.BOARD W/COMPONENT	1	FOR AU-65H,AU-63H
		9P REMOTE		AU-62H

Ref.No.		Part No.	Part Name & Description	Pcs	Remarks
	■	VEP80765A	P.C.BOARD W/COMPONENT		FOR AU-65H
			WO MOTHER 1		
			CAPACITORS		
C1,C2		ECEA1CU221	E.CAPACITOR 16V 220U	2	
CN8		VJP1229T	CONNECTOR(MALE) 2P	1	
CN9		VJP1230T	CONNECTOR(MALE) 3P	1	
CN12-14		VJP3079	CONNECTOR (MALE)	3	
CN15		VJP3083	CONNECTOR (MALE)	1	
CN17		VJP1235T	CONNECTOR(MALE) 8P	1	
CN20		VJP2893A064	CONNECTOR(MALE)	1	
CN21		VJP1233T	CONNECTOR(MALE) 6P	1	
CN22,23		VJP1232T	CONNECTOR(MALE) 5P	2	
CN24		VJP3082	CONNECTOR (MALE)	1	
CN25		VJP3078	CONNECTOR (MALE)	1	
CN26		VJP3082	CONNECTOR (MALE)	1	
CN28		VJP1231T	CONNECTOR(MALE) 4P	1	
CN30,31		VJP3083	CONNECTOR (MALE)	2	
CN36		VJP3080	CONNECTOR (MALE)	1	
CN39		VJP3080	CONNECTOR (MALE)	1	
CN40		VJP3094	CONNECTOR (MALE)	1	
CN41,42		VJP3083	CONNECTOR (MALE)	2	
CN46		VJP3092	CONNECTOR (MALE)	1	
CN48		VJP3078	CONNECTOR (MALE)	1	
CN320		VJP3079	CONNECTOR (MALE)	1	
CN321		VJP3081	CONNECTOR	1	
CN600		VJP1230T	CONNECTOR(MALE) 3P	1	
POWER1		VJP1709	CONNECTOR(MALE)	1	
POWER2		VJP1627	CONNECTOR(MALE)	1	
			MISCELLANEOUS		
		VJF0004	CLAMPER	1	
		VMP2617	P.C.B. HOLDER ANGLE	1	
		VMP2618	P.C.B. HOLDER ANGLE	1	
		VMP2619	P.C.B. HOLDER ANGLE	1	
		XNG26E	NUT	8	
		XTV26+10F	SCREW	24	
		XWA26B	WASHER	8	
		XWG26	WASHER	8	
	■	VEP80765C	P.C.BOARD W/COMPONENT		FOR AU-63H
			WO MOTHER 1		
			CAPACITORS		
C1,C2		ECEA1CU221	E.CAPACITOR 16V 220U	2	
CN8		VJP1229T	CONNECTOR (MALE) 2P	1	
CN12-14		VJP3079	CONNECTOR (MALE)	3	

Ref.No.		Part No.	Part Name & Description	Pcs	Remarks
CN15		VJP3083	CONNECTOR (MALE)	1	
CN17		VJP1235T	CONNECTOR (MALE) 8P	1	
CN20		VJP2893A064	CONNECTOR (MALE)	1	
CN21		VJP1233T	CONNECTOR (MALE) 6P	1	
CN22,23		VJP1232T	CONNECTOR (MALE) 5P	2	
CN24		VJP3082	CONNECTOR (MALE)	1	
CN25		VJP3078	CONNECTOR (MALE)	1	
CN26		VJP3082	CONNECTOR (MALE)	1	
CN28		VJP1231T	CONNECTOR (MALE) 4P	1	
CN30,31		VJP3083	CONNECTOR (MALE)	2	
CN36		VJP3080	CONNECTOR (MALE)	1	
CN39		VJP3080	CONNECTOR (MALE)	1	
CN40		VJP3094	CONNECTOR (MALE)	1	
CN41,42		VJP3083	CONNECTOR (MALE)	2	
CN46		VJP3092	CONNECTOR (MALE)	1	
CN48		VJP3078	CONNECTOR (MALE)	1	
CN320		VJP3079	CONNECTOR (MALE)	1	
CN321		VJP3081	CONNECTOR (MALE)	1	
CN600		VJP1230T	CONNECTOR (MALE) 3P	1	
POWER1		VJP1709	CONNECTOR(MALE)	1	
POWER2		VJP1627	CONNECTOR (MALE)	1	
			MISCELLANEOUS		
		VJF0304	CLAMPER	4	
		VJF0004	CLAMPER	1	
		VMP2617	P.C.B. HOLDER ANGLE	1	
		VMP2618	P.C.B. HOLDER ANGLE	1	
		VMP2619	P.C.B. HOLDER ANGLE	1	
		XNG26E	NUT	8	
		XTV26+10F	SCREW	20	
		XWA26B	WASHER	8	
		XWG26	WASHER	8	
	■	VEP80765B	P.C.BOARD W/COMPONENT		FOR AU-62H
			WO MOTHER 1		
			CAPACITORS		
C1,C2		ECEA1CU221	E.CAPACITOR 16V 220U	2	
CN8		VJP1229T	CONNECTOR (MALE) 2P	1	
CN12-14		VJP3079	CONNECTOR (MALE)	3	
CN15		VJP3083	CONNECTOR (MALE)	1	
CN17		VJP1235T	CONNECTOR (MALE) 8P	1	
CN20		VJP2893A064	CONNECTOR (MALE)	1	
CN21		VJP1233T	CONNECTOR (MALE) 6P	1	
CN22,23		VJP1232T	CONNECTOR (MALE) 5P	2	
CN24		VJP3082	CONNECTOR (MALE)	1	
CN25		VJP3078	CONNECTOR (MALE)	1	
CN26		VJP3082	CONNECTOR (MALE)	1	
CN28		VJP1231T	CONNECTOR (MALE) 4P	1	
CN30,31		VJP3083	CONNECTOR (MALE)	2	
CN36		VJP3080	CONNECTOR (MALE)	1	
CN39		VJP3080	CONNECTOR (MALE)	1	
CN40		VJP3094	CONNECTOR (MALE)	1	
CN41,42		VJP3083	CONNECTOR (MALE)	2	
CN46		VJP3092	CONNECTOR (MALE)	1	
CN48		VJP3078	CONNECTOR (MALE)	1	
CN320		VJP3079	CONNECTOR (MALE)	1	
CN321		VJP3081	CONNECTOR (MALE)	1	
CN600		VJP1230T	CONNECTOR (MALE) 3P	1	

Ref.No.		Part No.	Part Name & Description	Pcs	Remarks
POWER1		VJP1709	CONNECTOR(MALE)	1	
POWER2		VJP1627	CONNECTOR(MALE)	1	
			MISCELLANEOUS		
		VJF0004	CLAMPER	1	
		VJF0304	CLAMPER	1	
		VMP2617	P.C.B. HLDER ANGLE	1	
		VMP2618	P.C.B. HLDER ANGLE	1	
		VMP2619	P.C.B. HLDER ANGLE	1	
		XNG26E	NUT	8	
		XTV26+10F	SCREW	24	
		XWA26B	WASHER	8	
		XWG26	WASHER	8	

Ref.No.		Part No.	Part Name & Description	Pcs	Remarks
	■	VEP88091C	P.C.BOARD W/COMPONENT		FOR AU-65H,AU-63H
			W1 TBC & SYNCGEN		AU-62H
	■	VEP80681A	P.C.BOARD W/COMPONENT		ON VEP88091C
			W1 TBC SUB		
			CAPACITORS		
C1		ECUM1E104ZFN	C.CAPACITOR CH 25V 0.1U	1	
C1		ECUM1E104ZFN	C.CAPACITOR CH 25V 0.1U	1	
C2		ECEA0JU101	E.CAPACITOR 6.3V 100U	1	
C2,C3		ECUM1E104ZFN	C.CAPACITOR CH 25V 0.1U	2	
C3		ECUM1E104ZFN	C.CAPACITOR CH 25V 0.1U	1	
C4		ECEA0JU101	E.CAPACITOR 6.3V 100U	1	
C4,C5		ECUM1E104ZFN	C.CAPACITOR CH 25V 0.1U	2	
C5		ECUM1E104ZFN	C.CAPACITOR CH 25V 0.1U	1	
C6		ECEA1CU101	E.CAPACITOR 16V 100U	1	
C6,C7		ECUM1E104ZFN	C.CAPACITOR CH 25V 0.1U	2	
C7		ECUM1E104ZFN	C.CAPACITOR CH 25V 0.1U	1	
C8		ECEA1CU101	E.CAPACITOR 16V 100U	1	
C8,C9		ECUM1E104ZFN	C.CAPACITOR CH 25V 0.1U	2	
C9		ECUM1H102JCN	C.CAPACITOR CH 50V 1000P	1	
C10		ECEA1AU101	E.CAPACITOR 10V 100U	1	
C10		ECUM1H123KBN	C.CAPACITOR CH 50V 0.012U	1	
C11		ECUM1E104ZFN	C.CAPACITOR CH 25V 0.1U	1	
C11		ECUM1H103KBN	C.CAPACITOR CH 50V 0.01U	1	
C12		ECEA1CU101	E.CAPACITOR 16V 100U	1	
C12		ECUM1H103KBN	C.CAPACITOR CH 50V 0.01U	1	
C13		ECUM1E104ZFN	C.CAPACITOR CH 25V 0.1U	1	
C13		ECUM1H102JCN	C.CAPACITOR CH 50V 1000P	1	
C14		ECEA1AU101	E.CAPACITOR 10V 100U	1	
C14		ECUM1H103KBN	C.CAPACITOR CH 50V 0.01U	1	
C15		ECUM1E104ZFN	C.CAPACITOR CH 25V 0.1U	1	
C15		ECUM1H103KBN	C.CAPACITOR CH 50V 0.01U	1	
C16		ECUM1E104ZFN	C.CAPACITOR CH 25V 0.1U	1	
C16		ECUM1H103KBN	C.CAPACITOR CH 50V 0.01U	1	
C17		ECUM1E104ZFN	C.CAPACITOR CH 25V 0.1U	1	
C17		ECUM1H103KBN	C.CAPACITOR CH 50V 0.01U	1	
C18		ECUM1E104ZFN	C.CAPACITOR CH 25V 0.1U	1	
C18		ECUM1H391JCN	C.CAPACITOR CH 50V 390P	1	
C19-22		ECUM1E104ZFN	C.CAPACITOR CH 25V 0.1U	4	
C23		ECEA1CU220	E.CAPACITOR 16V 22U	1	
C24		ECUM1E104ZFN	C.CAPACITOR CH 25V 0.1U	1	
C25		ECEA1HU2R2	E.CAPACITOR 50V 2.2U	1	
C26		ECEA1CU220	E.CAPACITOR 16V 22U	1	
C27		ECUM1E104ZFN	C.CAPACITOR CH 25V 0.1U	1	
C28		ECEA1CU220	E.CAPACITOR 16V 22U	1	
C29-33		ECUM1E104ZFN	C.CAPACITOR CH 25V 0.1U	5	
C34		ECEA1HU2R2	E.CAPACITOR 50V 2.2U	1	
C35		ECEA1CU220	E.CAPACITOR 16V 22U	1	
C36		ECUM1E104ZFN	C.CAPACITOR CH 25V 0.1U	1	
C37		ECEA1AU221	E.CAPACITOR 10V 220U	1	
C38		ECEA1HU2R2	E.CAPACITOR 50V 2.2U	1	
C39		ECUM1E104ZFN	C.CAPACITOR CH 25V 0.1U	1	
C40		ECEA0JU101	E.CAPACITOR 6.3V 100U	1	
C41		ECUM1E104ZFN	C.CAPACITOR CH 25V 0.1U	1	
C43		ECUM1H221JCN	C.CAPACITOR CH 50V 220P	1	
C44		ECUM1H151JCN	C.CAPACITOR CH 50V 150P	1	
C47,48		ECUM1E104ZFN	C.CAPACITOR CH 25V 0.1U	2	
C50-52		ECUM1E104ZFN	C.CAPACITOR CH 25V 0.1U	3	
C53		ECUM1H223KBN	C.CAPACITOR CH 50V 0.022U	1	
C54		ECEA0JKS100	E.CAPACITOR 6.3V 10U	1	
C55		ECEA0JKS220	E.CAPACITOR 6.3V 22U	1	
C57,58		ECUM1H101JCN	C.CAPACITOR CH 50V 100P	2	
C59,60		ECUM1E104ZFN	C.CAPACITOR CH 25V 0.1U	2	
C77,78		ECUM1E104ZFN	C.CAPACITOR CH 25V 0.1U	2	
C79		ECEA1CU220	E.CAPACITOR 16V 22U	1	
C81		ECQV1H474JZ	P.CAPACITOR 50V 0.47U	1	
C82-99		ECUM1H103KBN	C.CAPACITOR CH 50V 0.01U	18	
C100-02		ECUM1H103KBN	C.CAPACITOR CH 50V 0.01U	3	
C103		ECUM1H181JCN	C.CAPACITOR CH 50V 180P	1	
C110-21		ECUM1E104ZFN	C.CAPACITOR CH 25V 0.1U	12	

Ref.No.		Part No.	Part Name & Description	Pcs	Remarks
C201		ECEA1CU470	E.CAPACITOR 16V 47U	1	
C202,03		ECUM1H103KBN	C.CAPACITOR CH 50V 0.01U	2	
C204		ECUM1H181JCN	C.CAPACITOR CH 50V 180P	1	
C205		ECUM1H103KBN	C.CAPACITOR CH 50V 0.01U	1	
C206		ECUM1H180JCN	C.CAPACITOR CH 50V 18P	1	
C207		ECUM1H680JCN	C.CAPACITOR CH 50V 68P	1	
C208,09		ECUM1C104KBN	C.CAPACITOR CH 16V 0.1U	2	
C210		ECEA1HN010S	E.CAPACITOR 50V 1U	1	
C211		ECUM1E104ZFN	C.CAPACITOR CH 25V 0.1U	1	
C212		ECEA1CU470	E.CAPACITOR 16V 47U	1	
C213		ECUM1H330JCN	C.CAPACITOR CH 50V 33P	1	
C214		ECUM1H101JCN	C.CAPACITOR CH 50V 100P	1	
C215		ECUM1H181JCN	C.CAPACITOR CH 50V 180P	1	
C216		ECUM1H101JCN	C.CAPACITOR CH 50V 100P	1	
C217		ECUM1H220JCN	C.CAPACITOR CH 50V 22P	1	
C218		ECUM1H470JCN	C.CAPACITOR CH 50V 47P	1	
C219-22		ECUM1E104ZFN	C.CAPACITOR CH 25V 0.1U	4	
C225		ECUM1H820JCN	C.CAPACITOR CH 50V 82P	1	
C226		ECEA1CU100	E.CAPACITOR 16V 10U	1	
C227		ECEA1CU470	E.CAPACITOR 16V 47U	1	
C228		ECUM1E104ZFN	C.CAPACITOR CH 25V 0.1U	1	
C229		ECUM1H103KBN	C.CAPACITOR CH 50V 0.01U	1	
C230		ECUM1E104ZFN	C.CAPACITOR CH 25V 0.1U	1	
C231		ECEA1HN2R2S	E.CAPACITOR 50V 2.2U	1	
C232		ECUM1E104ZFN	C.CAPACITOR CH 25V 0.1U	1	
C233		ECUM1H270JCN	C.CAPACITOR CH 50V 27P	1	
C234		ECV1ZW20X53T	V.CAPACITOR 20P	1	
C235		ECUM1H102JCN	C.CAPACITOR CH 50V 1000P	1	
C236		ECUM1E104ZFN	C.CAPACITOR CH 25V 0.1U	1	
C237		ECEA1CU100	E.CAPACITOR 16V 10U	1	
C238		ECUM1H150JCN	C.CAPACITOR CH 50V 15P	1	
C239		ECUM1H220JCN	C.CAPACITOR CH 50V 22P	1	
C240		ECUM1H103KBN	C.CAPACITOR CH 50V 0.01U	1	
C241,42		ECUM1E104ZFN	C.CAPACITOR CH 25V 0.1U	2	
C243		ECUM1C104KBN	C.CAPACITOR CH 16V 0.1U	1	
C244-46		ECUM1E104ZFN	C.CAPACITOR CH 25V 0.1U	3	
C247		ECUM1H390JCN	C.CAPACITOR CH 50V 39P	1	
C248		ECUM1E104ZFN	C.CAPACITOR CH 25V 0.1U	1	
C250		ECEA1CU470	E.CAPACITOR 16V 47U	1	
C251		ECEA1AU470	E.CAPACITOR 10V 47U	1	
C252		ECUM1E104ZFN	C.CAPACITOR CH 25V 0.1U	1	
C253		ECEA1CU100	E.CAPACITOR 16V 10U	1	
C254,55		ECUM1E104ZFN	C.CAPACITOR CH 25V 0.1U	2	
C256		ECUM1H103KBN	C.CAPACITOR CH 50V 0.01U	1	
C257		ECUM1E104ZFN	C.CAPACITOR CH 25V 0.1U	1	
C258		ECEA1HN010S	E.CAPACITOR 50V 1U	1	
C259		ECUM1E104ZFN	C.CAPACITOR CH 25V 0.1U	1	
C260		ECEA1AU470	E.CAPACITOR 10V 47U	1	
C261		ECUM1E104ZFN	C.CAPACITOR CH 25V 0.1U	1	
C262		ECEA1AU470	E.CAPACITOR 10V 47U	1	
C263		ECUM1E104ZFN	C.CAPACITOR CH 25V 0.1U	1	
C264		ECEA1CN100S	E.CAPACITOR 16V 10U	1	
C265		ECUM1H102JCN	C.CAPACITOR CH 50V 1000P	1	
C266		ECUM1H150JCN	C.CAPACITOR CH 50V 15P	1	
C267,68		ECUM1E104ZFN	C.CAPACITOR CH 25V 0.1U	2	
C270		ECUM1H103KBN	C.CAPACITOR CH 50V 0.01U	1	
C271-73		ECUM1E104ZFN	C.CAPACITOR CH 25V 0.1U	3	
C275		ECUM1H102JCN	C.CAPACITOR CH 50V 1000P	1	
C276		ECUM1E104ZFN	C.CAPACITOR CH 25V 0.1U	1	
C277		ECEA1AU470	E.CAPACITOR 10V 47U	1	
C279		ECUM1H103KBN	C.CAPACITOR CH 50V 0.01U	1	
C280,81		ECUM1E104ZFN	C.CAPACITOR CH 25V 0.1U	2	
C282		ECUM1C104KBN	C.CAPACITOR CH 16V 0.1U	1	
C283		ECUM1H102JCN	C.CAPACITOR CH 50V 1000P	1	
C284-91		ECUM1E104ZFN	C.CAPACITOR CH 25V 0.1U	8	
C293-95		ECUM1H560JCN	C.CAPACITOR CH 50V 56P	3	
C296		ECEA1HNR47S	E.CAPACITOR 50V 0.47U	1	
C401		ECQM1H222JF	P.CAPACITOR 50V 2200P	1	
C402		ECQM1H223JF	P.CAPACITOR 50V 0.022U	1	
C403		ECQM1H222JF	P.CAPACITOR 50V 2200P	1	
C406		ECQM1H102JF	P.CAPACITOR 50V 1000P	1	
C407,08		ECUM1H221JCN	C.CAPACITOR CH 50V 220P	2	
C409		ECUM1E104ZFN	C.CAPACITOR CH 25V 0.1U	1	
C410,11		ECUM1H820JCN	C.CAPACITOR CH 50V 82P	2	
C412		ECUM1E104ZFN	C.CAPACITOR CH 25V 0.1U	1	

Ref.No.	Part No.	Part Name & Description	Pcs	Remarks
C413	ECUM1H820JCN	C.CAPACITOR CH 50V 82P	1	
C414-18	ECUM1E104ZFN	C.CAPACITOR CH 25V 0.1U	5	
C423	ECUM1H391JCN	C.CAPACITOR CH 50V 390P	1	
C424	ECUM1E104ZFN	C.CAPACITOR CH 25V 0.1U	1	
C425	ECQM1H102JF	P.CAPACITOR 50V 1000P	1	
C426	ECUM1H221JCN	C.CAPACITOR CH 50V 220P	1	
C427	ECQM1H102JF	P.CAPACITOR 50V 1000P	1	
C438	ECUM1H681JCN	C.CAPACITOR CH 50V 680P	1	
C441	ECQM1H102JF	P.CAPACITOR 50V 1000P	1	
C442	ECUM1H221JCN	C.CAPACITOR CH 50V 220P	1	
C443-46	ECUM1E104ZFN	C.CAPACITOR CH 25V 0.1U	4	
C450	ECQM1H392JF	P.CAPACITOR 50V 3900P	1	
C452	ECUM1H151JCN	C.CAPACITOR CH 50V 150P	1	
C453	ECQM1H223JF	P.CAPACITOR 50V 0.022U	1	
C454	ECQM1H122JF	P.CAPACITOR 50V 1200P	1	
C455	ECQM1H104JF	P.CAPACITOR 50V 0.1U	1	
C456	ECEA1CN100S	E.CAPACITOR 16V 10U	1	
C457	ECUM1H561JCN	C.CAPACITOR CH 50V 560P	1	
C458	ECUM1E104ZFN	C.CAPACITOR CH 25V 0.1U	1	
C459	ECEA1AU220	E.CAPACITOR 10V 22U	1	
C460,61	ECUM1H101JCN	C.CAPACITOR CH 50V 100P	2	
C462	ECUM1E104ZFN	C.CAPACITOR CH 25V 0.1U	1	
C463	ECEA1AU220	E.CAPACITOR 10V 22U	1	
C464	ECUM1H103KBN	C.CAPACITOR CH 50V 0.01U	1	
C465	ECUM1H560JCN	C.CAPACITOR CH 50V 56P	1	
C467	ECUM1E104ZFN	C.CAPACITOR CH 25V 0.1U	1	
C468	ECEA1AU220	E.CAPACITOR 10V 22U	1	
C469,70	ECUM1E104ZFN	C.CAPACITOR CH 25V 0.1U	2	
C471	ECUM1H151JCN	C.CAPACITOR CH 50V 150P	1	
C473	ECUM1E104ZFN	C.CAPACITOR CH 25V 0.1U	1	
C474	ECEA1AU101	E.CAPACITOR 10V 100U	1	
C475	ECUM1E104ZFN	C.CAPACITOR CH 25V 0.1U	1	
C476	ECEA1CU101	E.CAPACITOR 16V 100U	1	
C477	ECUM1E104ZFN	C.CAPACITOR CH 25V 0.1U	1	
C478	ECEA1CU101	E.CAPACITOR 16V 100U	1	
C479	ECQM1H103JF	P.CAPACITOR 50V 0.01U	1	
C480	ECUM1H470JCN	C.CAPACITOR CH 50V 47P	1	
C481	ECUM1H181JCN	C.CAPACITOR CH 50V 180P	1	
C482	ECQM1H122JF	P.CAPACITOR 50V 1200P	1	
C483	ECQM1H103JF	P.CAPACITOR 50V 0.01U	1	
C484	ECUM1E104ZFN	C.CAPACITOR CH 25V 0.1U	1	
C485	ECEA1AU220	E.CAPACITOR 10V 22U	1	
C486	ECUM1E104ZFN	C.CAPACITOR CH 25V 0.1U	1	
C487	ECEA1HUR47	E.CAPACITOR 50V 0.47U	1	
C488	ECEA1HN010S	E.CAPACITOR 50V 1U	1	
C489	ECEA1HU2R2	E.CAPACITOR 50V 2.2U	1	
C490	ECUM1H330JCN	C.CAPACITOR CH 50V 33P	1	
C491	ECQM1H223JF	P.CAPACITOR 50V 0.022U	1	
C504	ECUM1H470JCN	C.CAPACITOR CH 50V 47P	1	
C514	ECUM1E104ZFN	C.CAPACITOR CH 25V 0.1U	1	
C517	ECUM1H470JCN	C.CAPACITOR CH 50V 47P	1	
C518-20	ECUM1E104ZFN	C.CAPACITOR CH 25V 0.1U	3	
C521	ECEA1CU101	E.CAPACITOR 16V 100U	1	
C522	ECUM1E104ZFN	C.CAPACITOR CH 25V 0.1U	1	
C523	ECEA1CU101	E.CAPACITOR 16V 100U	1	
C524	ECUM1E104ZFN	C.CAPACITOR CH 25V 0.1U	1	
C525	ECEA1AU101	E.CAPACITOR 10V 100U	1	
C528	ECEA1AU220	E.CAPACITOR 10V 22U	1	
C529	ECUM1E104ZFN	C.CAPACITOR CH 25V 0.1U	1	
C551	ECUM1E104ZFN	C.CAPACITOR CH 25V 0.1U	1	
C600-09	ECUM1E104ZFN	C.CAPACITOR CH 25V 0.1U	10	
C614,15	ECUM1E104ZFN	C.CAPACITOR CH 25V 0.1U	2	
C620	ECUM1H102JCN	C.CAPACITOR CH 50V 1000P	1	
C621,22	ECUM1H221JCN	C.CAPACITOR CH 50V 220P	2	
C623,24	ECUM1H392KBN	C.CAPACITOR CH 50V 3900P	2	
C625-36	ECUM1E104ZFN	C.CAPACITOR CH 25V 0.1U	12	
C638,39	ECUM1H102JCN	C.CAPACITOR CH 50V 1000P	2	
C640	ECUM1E104ZFN	C.CAPACITOR CH 25V 0.1U	1	
C641	ECUM1H102JCN	C.CAPACITOR CH 50V 1000P	1	
C642	ECUM1H391JCN	C.CAPACITOR CH 50V 390P	1	
C643	ECUM1H101JCN	C.CAPACITOR CH 50V 100P	1	
C644	ECUM1H820JCN	C.CAPACITOR CH 50V 82P	1	
C645	ECUM1H680JCN	C.CAPACITOR CH 50V 68P	1	
C700	ECCF1H151JC	C.CAPACITOR 50V 150P	1	
C701	VCK0036104KR	C.CAPACITOR 50V 0.1U	1	

Ref.No.	Part No.	Part Name & Description	Pcs	Remarks
C702	VCK0036104KR	C.CAPACITOR 50V 0.1U	1	
C703	ECCF1H121JC	C.CAPACITOR 50V 120P	1	
C704	VCK0036104KR	C.CAPACITOR 50V 0.1U	1	
C705	ECCF1H121JC	C.CAPACITOR 50V 120P	1	
C706	VCK0036104KR	C.CAPACITOR 50V 0.1U	1	
C707	VCK0036104KR	C.CAPACITOR 50V 0.1U	1	
C708	VCK0036104KR	C.CAPACITOR 50V 0.1U	1	
C709	ECCF1H151JC	C.CAPACITOR 50V 150P	1	
C710	VCK0036104KR	C.CAPACITOR 50V 0.1U	1	
C711	ECCF1H820JC	C.CAPACITOR 50V 82P	1	
C712	ECCF1H121JC	C.CAPACITOR 50V 120P	1	
C713	VCK0036104KR	C.CAPACITOR 50V 0.1U	1	
C714	ECCF1H560JC	C.CAPACITOR 50V 56P	1	
C715	ECCF1H560JC	C.CAPACITOR 50V 56P	1	
CN1	VJP2983A020	CONNECTOR (MALE)	1	
CN1	VJS2983A020	CONNECTOR (FEMALE)	1	
CN2	VJP2983A010	CONNECTOR (MALE)	1	
CN2	VJS2983A010	CONNECTOR (FEMALE)	1	
CN3	VJP2983A010	CONNECTOR (MALE)	1	
CN3	VJS2983A010	CONNECTOR (FEMALE)	1	
CN4	VJP2983A010	CONNECTOR (MALE)	1	
CN4	VJS2983A010	CONNECTOR (FEMALE)	1	
CN5	VJP2983A020	CONNECTOR (MALE)	1	
CN5	VJS2983A020	CONNECTOR (FEMALE)	1	
CN6	VJP1247T	CONNECTOR(MALE) 7P	1	
D201	MA151WA	DIODE	1	
D202	MA335-R	DIODE	1	
D203	MA151K	DIODE	1	
D206-10	MA151K	DIODE	5	
D211	MA151WK	DIODE	1	
D212	MA151K	DIODE	1	
D402	MA151K	DIODE	1	
D404	MA153	DIODE	1	
D406	MA151K	DIODE	1	
D407	MA335-R	DIODE	1	
D408-10	MA151K	DIODE	3	
D416,17	MA151K	DIODE	2	
IC1	MC74HC74AF	IC	1	
IC1	SN74LS123NS	IC	1	
IC2	MC74HC08AF	IC	1	
IC2	MC74HC161F	IC	1	
IC3	MC74HC00AF	IC	1	
IC3	MC74HC00AF	IC	1	
IC4	MC74HC08AF	IC	1	
IC4	SN74ALS574A	IC	1	
IC5	MC74HC32AF	IC	1	
IC5	SN74ALS574A	IC	1	
IC6	MC74HC74AF	IC	1	
IC6,C7	MC74HC74AF	IC	2	
IC7	UPD65013F101	IC	1	
IC8	VSI1012	IC	1	
IC9	MC74HC574AF	IC	1	
IC9	UPD74HC123AG	IC	1	
IC10	MC74HC74AF	IC	1	
IC11	MC74HC00AF	IC	1	
IC11	MC74HC08AF	IC	1	
IC12	MM74HC221AM	IC	1	
IC12	SN74ALS574A	IC	1	
IC13	HM63021P	IC	1	
IC13	MC74HC32AF	IC	1	
IC14	MC74HC74AF	IC	1	
IC14	M74F374FP	IC	1	
IC15	MC74HC08AF	IC	1	
IC15,16	M74F157AF	IC	2	
IC17	UPD65012F475	IC	1	
IC18,19	MC74HC574AF	IC	2	

Ref.No.	Part No.	Part Name & Description	Pcs	Remarks
IC20,21	M74F04FP	IC	2	
IC22	MC74HC574AF	IC	1	
IC24	MB621492PF	IC	1	
IC25	MB620462PF	IC	1	
IC26,27	UPD42101G-3	IC	2	
IC28,29	MB81C1501PF	IC	2	
IC31,32	MB81C1501PF	IC	2	
IC33,34	MB606905UPF	IC	2	
IC35	HM63021P	IC	1	
IC36	MC74HC574AF	IC	1	
IC37	HM63021P	IC	1	
IC45	UPD65013FA44	IC	1	
IC46-48	MB40778PF	IC	3	
IC49	AN78L09	IC	1	
IC50	AN79L09	IC	1	
IC51	AN78N05	IC	1	
IC53	M74F109FP	IC	1	
IC54,55	RC082BM	IC	2	
IC57	RC082BM	IC	1	
IC58	MC74HC74AF	IC	1	
IC59	RC082BM	IC	1	
IC70	M74F04FP	IC	1	
IC71	M74F30FP	IC	1	
IC72	M74F244FP	IC	1	
IC73	VSI1194	IC	1	
IC74	VSI1011	IC	1	
IC75	VSI1009	IC	1	
IC76	VSI1010	IC	1	
IC77	M74F30FP	IC	1	
IC78	MC74HC74AF	IC	1	
IC79	M74F04FP	IC	1	
IC80	M74F74FP	IC	1	
IC81	MC74HC74AF	IC	1	
IC82,83	SN74LS161AS	IC	2	
IC201	AN91A12S	IC	1	
IC202	MN53015VZW	IC	1	
IC203	UPD65024F152	IC	1	
IC204	UPD65040F144	IC	1	
IC205	NE521D	IC	1	
IC206,07	MN74HC221S	IC	2	
IC208	MC74HC32AF	IC	1	
IC209	MC14053BF	IC	1	(R)
IC210	RC082BM	IC	1	
IC211	NE521D	IC	1	
IC212	MC74HC04AF	IC	1	
IC213	MC74HC125AF	IC	1	
IC214	MC74HC02AF	IC	1	
IC216,17	UPC4082G	IC	2	
IC218	DN74LS04NS	IC	1	
IC220	MC74HC74AF	IC	1	
IC221,22	RC082BM	IC	2	
IC223	MC74HC04AF	IC	1	
IC224	MC74HC08AF	IC	1	
IC225,26	MC74HC04AF	IC	2	
IC228	AN78L09	IC	1	
IC229	AN79L05	IC	1	
IC230	AN78L09	IC	1	
IC231-33	AN78L05	IC	3	
IC240	MC74HC08AF	IC	1	
IC401	MC74HC86F	IC	1	
IC402	SN74LS221NS	IC	1	
IC403	MC74HC00AF	IC	1	
IC404	MC74HC02AF	IC	1	
IC405	UPD65022B264	IC	1	
IC409	MC74HC00AF	IC	1	
IC410	SN75452BPS	IC	1	
IC411	UPC319G2	IC	1	
IC412	MC74HC04AF	IC	1	
IC413	SN74LS123NS	IC	1	
IC415	SN74LS123NS	IC	1	
IC416	UPD65022C252	IC	1	
IC418	SN74LS123NS	IC	1	
IC419	MC74HC4053F	IC	1	
IC420,21	RC082BM	IC	2	
IC422	AN79L05	IC	1	

Ref.No.	Part No.	Part Name & Description	Pcs	Remarks
IC423	AN78L05	IC	1	
IC424	MC1648P	IC	1	
IC425	MC10125L	IC	1	
IC426	M74F86FP	IC	1	
IC427,28	M74F109FP	IC	2	
IC429	SN74LS221NS	IC	1	
IC430	AN79L05	IC	1	
IC431	AN79L09	IC	1	
IC432	AN78L09	IC	1	
IC433	SN74LS123NS	IC	1	
IC434	SN74LS221NS	IC	1	
IC435	RC082BM	IC	1	
IC436	MC74HC4053F	IC	1	
IC437	AN78L05	IC	1	
IC438	UPC358G2	IC	1	
IC439	SN74LS624NS	IC	1	
IC441	MC74HC74AF	IC	1	
IC442	MC74HC125AF	IC	1	
IC443	MC74HC00AF	IC	1	
IC444	RC082BM	IC	1	
IC445	NE521D	IC	1	
IC446	MC74HC00AF	IC	1	
IC448	MC74HC08AF	IC	1	
IC470	UPD65022F258	IC	1	
IC471,72	M74F04FP	IC	2	
IC474	AN79L09	IC	1	
IC475	AN78L09	IC	1	
IC476	AN79L05	IC	1	
IC477	M74F157AF	IC	1	
IC478	MC74HC00AF	IC	1	
IC479	UPD65025B030	IC	1	
IC480	AN78L05	IC	1	
IC481	RC082BM	IC	1	
IC489,90	MM74HC221AM	IC	2	
IC491	MC74HC158F	IC	1	
IC492	MC74HC00AF	IC	1	
IC493	SN74LS123NS	IC	1	
IC494	MC74HC74AF	IC	1	
IC495	MN74HC221S	IC	1	
IC496	MC74HC74AF	IC	1	
IC497	M74F74FP	IC	1	
IC498	MC74HC04AF	IC	1	
IC499,00	M74F74FP	IC	2	
IC501	MC74HC74AF	IC	1	
IC502,03	SN74LS123NS	IC	2	
IC504	MM74HC221AM	IC	1	
L1-L8	VLP0017	COIL	8	
L201	VLQEL05S101J	COIL 100UH	1	
L202	VLQEL05S221J	COIL 220UH	1	
L203	VLQEL05S39QJ	COIL 39UH	1	
L204	VLQEL05S221J	COIL 220UH	1	
L205	VLQEL05S47QJ	COIL 47UH	1	
L404	VLQ0211M1R8	COIL 1.8UH	1	
Q201	DTC124EK	TRANSISTOR-RESISTOR	1	
Q202	2SB709-R	TRANSISTOR CHIP	1	(Q,R)
Q203,04	2SK606	TRANSISTOR	2	
Q402,03	2SD601-R	TRANSISTOR CHIP	2	(Q,R)
Q404-06	2SB709-R	TRANSISTOR CHIP	3	(Q,R)
Q408	2SB709-R	TRANSISTOR CHIP	1	(Q,R)
		RESISTORS		
R1	ERJ6GEY0R00	M.RESISTOR CH 1/10W 0	1	
R2	ERJ6GEYG472	M.RESISTOR CH 1/10W 4.7K	1	
R2	ERJ6GEY0R00	M.RESISTOR CH 1/10W 0	1	
R3	ERJ6GEYG103	M.RESISTOR CH 1/10W 10K	1	
R3	ERJ6GEYJ682	M.RESISTOR CH 1/10W 6.8K	1	
R4	ERJ6GEYG103	M.RESISTOR CH 1/10W 10K	1	

Ref.No.		Part No.	Part Name & Description	Pcs	Remarks
R4		ERJ6GEYG563	M.RESISTOR CH 1/10W 56K	1	
R5		ERJ6GEYG270	M.RESISTOR CH 1/10W 27	1	
R5		ERJ6GEYJ472	M.RESISTOR CH 1/10W 4.7K	1	
R6		ERJ6GEYJ333	M.RESISTOR CH 1/10W 33K	1	
R6		ERJ6GEY0R00	M.RESISTOR CH 1/10W 0	1	
R7		ERJ6GEYG563	M.RESISTOR CH 1/10W 56K	1	
R9		ERJ6GEY0R00	M.RESISTOR CH 1/10W 0	1	
R11		ERJ6GEYJ272	M.RESISTOR CH 1/10W 2.7K	1	
R11		ERJ6GEY0R00	M.RESISTOR CH 1/10W 0	1	
R12		ERJ6GEYJ272	M.RESISTOR CH 1/10W 2.7K	1	
R13		ERJ6GEYG270	M.RESISTOR CH 1/10W 27	1	
R13		ERJ6GEY0R00	M.RESISTOR CH 1/10W 0	1	
R14		ERJ6GEYG103	M.RESISTOR CH 1/10W 10K	1	
R15,16		ERJ6GEY0R00	M.RESISTOR CH 1/10W 0	2	
R16-18		ERJ6GEY0R00	M.RESISTOR CH 1/10W 0	3	
R19		ERJ6GEYJ272	M.RESISTOR CH 1/10W 2.7K	1	
R19		ERJ6GEY0R00	M.RESISTOR CH 1/10W 0	1	
R20		ERJ6GEYJ272	M.RESISTOR CH 1/10W 2.7K	1	
R21		ERJ6GEY0R00	M.RESISTOR CH 1/10W 0	1	
R21		ERJ6GEY0R00	M.RESISTOR CH 1/10W 0	1	
R22		ERJ6GEYG270	M.RESISTOR CH 1/10W 27	1	
R23		ERJ6GEY0R00	M.RESISTOR CH 1/10W 0	1	
R25		ERJ6GEY0R00	M.RESISTOR CH 1/10W 0	1	
R28,29		ERJ6GEYG103	M.RESISTOR CH 1/10W 10K	2	
R30		ERJ6GEYG182	M.RESISTOR CH 1/10W 1.8K	1	
R31		ERJ6GEYG103	M.RESISTOR CH 1/10W 10K	1	
R34,35		ERJ6GEYJ101	M.RESISTOR CH 1/10W 100	2	
R36-40		ERJ6GEYJ393	M.RESISTOR CH 1/10W 39K	5	
R42,43		ERJ6GEYJ105	M.RESISTOR CH 1/10W 1M	2	
R44		ERJ6GEY0R00	M.RESISTOR CH 1/10W 0	1	
R47-49		ERJ6GEYJ393	M.RESISTOR CH 1/10W 39K	3	
R51,52		ERJ6GEYG472	M.RESISTOR CH 1/10W 4.7K	2	
R53		ERJ6GEYG223	M.RESISTOR CH 1/10W 22K	1	
R55		ERJ6GEYG472	M.RESISTOR CH 1/10W 4.7K	1	
R57		ERJ6GEYG472	M.RESISTOR CH 1/10W 4.7K	1	
R60		ERJ6GEYG152	M.RESISTOR CH 1/10W 1.5K	1	
R61		ERJ6GEYG102	M.RESISTOR CH 1/10W 1K	1	
R62		ERJ6GEYG182	M.RESISTOR CH 1/10W 1.8K	1	
R63		ERJ6GEYG472	M.RESISTOR CH 1/10W 4.7K	1	
R64		ERJ6GEYG152	M.RESISTOR CH 1/10W 1.5K	1	
R65		ERJ6GEYG472	M.RESISTOR CH 1/10W 4.7K	1	
R66		ERJ6GEYG102	M.RESISTOR CH 1/10W 1K	1	
R67		ERJ6GEYG152	M.RESISTOR CH 1/10W 1.5K	1	
R68		ERJ6GEYG472	M.RESISTOR CH 1/10W 4.7K	1	
R69		ERJ6GEYG102	M.RESISTOR CH 1/10W 1K	1	
R70-72		ERJ6GEYJ393	M.RESISTOR CH 1/10W 39K	3	
R73		ERJ6GEY0R00	M.RESISTOR CH 1/10W 0	1	
R76-78		ERJ6GEY0R00	M.RESISTOR CH 1/10W 0	3	
R81-83		ERJ6GEY0R00	M.RESISTOR CH 1/10W 0	3	
R86-88		ERJ6GEY0R00	M.RESISTOR CH 1/10W 0	3	
R90,91		ERJ6GEY0R00	M.RESISTOR CH 1/10W 0	2	
R97		ERJ6GEY0R00	M.RESISTOR CH 1/10W 0	1	
R99		ERJ6GEYJ393	M.RESISTOR CH 1/10W 39K	1	
R100-15		ERJ6GEYJ332	M.RESISTOR CH 1/10W 3.3K	16	
R116		ERJ6GEYJ103	M.RESISTOR CH 1/10W 10K	1	
R117		ERJ6GEYJ274	M.RESISTOR CH 1/10W 270K	1	
R118		ERJ6GEYJ104	M.RESISTOR CH 1/10W 100K	1	
R132		ERJ6GEY0R00	M.RESISTOR CH 1/10W 0	1	
R134		ERJ6GEY0R00	M.RESISTOR CH 1/10W 0	1	
R152		ERJ6GEY0R00	M.RESISTOR CH 1/10W 0	1	
R201		ERJ6GEYJ224	M.RESISTOR CH 1/10W 220K	1	
R202		ERJ6GEYJ684	M.RESISTOR CH 1/10W 680K	1	
R203		ERJ6GEYJ103	M.RESISTOR CH 1/10W 10K	1	
R204,05		ERJ6GEYJ822	M.RESISTOR CH 1/10W 8.2K	2	
R206-10		ERJ6GEYJ222	M.RESISTOR CH 1/10W 2.2K	5	
R211		ERJ6GEYJ683	M.RESISTOR CH 1/10W 68K	1	
R212		ERJ6GEYJ222	M.RESISTOR CH 1/10W 2.2K	1	
R213,14		ERJ6GEYJ103	M.RESISTOR CH 1/10W 10K	2	
R215		ERJ6GEYJ333	M.RESISTOR CH 1/10W 33K	1	
R216		ERJ6GEYJ682	M.RESISTOR CH 1/10W 6.8K	1	
R217		ERJ6GEYJ103	M.RESISTOR CH 1/10W 10K	1	
R218		ERJ6GEYG563	M.RESISTOR CH 1/10W 56K	1	
R219		ERJ6GEYJ681	M.RESISTOR CH 1/10W 680	1	
R220		ERJ6GEYJ184	M.RESISTOR CH 1/10W 180K	1	
R221		ERJ6GEYJ392	M.RESISTOR CH 1/10W 3.9K	1	

Ref.No.		Part No.	Part Name & Description	Pcs	Remarks
R222,23		ERJ6GEYJ102	M.RESISTOR CH 1/10W 1K	2	
R224		ERJ6GEYJ222	M.RESISTOR CH 1/10W 2.2K	1	
R225		ERJ6GEYJ152	M.RESISTOR CH 1/10W 1.5K	1	
R226		ERJ6GEYJ333	M.RESISTOR CH 1/10W 33K	1	
R227		ERJ6GEYJ273	M.RESISTOR CH 1/10W 27K	1	
R228		ERJ6GEYG223	M.RESISTOR CH 1/10W 22K	1	
R229		ERJ6GEYJ105	M.RESISTOR CH 1/10W 1M	1	
R230		ERJ6GEYJ102	M.RESISTOR CH 1/10W 1K	1	
R231		ERJ6GEYJ473	M.RESISTOR CH 1/10W 47K	1	
R232		ERJ6GEYJ123	M.RESISTOR CH 1/10W 12K	1	
R233		ERJ6GEYJ103	M.RESISTOR CH 1/10W 10K	1	
R234,35		ERJ6GEYJ473	M.RESISTOR CH 1/10W 47K	2	
R236,37		ERJ6GEYJ332	M.RESISTOR CH 1/10W 3.3K	2	
R238		ERJ6GEYJ102	M.RESISTOR CH 1/10W 1K	1	
R239		ERJ6GEYJ123	M.RESISTOR CH 1/10W 12K	1	
R240		ERJ6GEYJ103	M.RESISTOR CH 1/10W 10K	1	
R241		ERJ6GEYJ221	M.RESISTOR CH 1/10W 220	1	
R243		ERJ6GEY0R00	M.RESISTOR CH 1/10W 0	1	
R247		ERJ6GEYJ332	M.RESISTOR CH 1/10W 3.3K	1	
R248		ERJ6GEYJ123	M.RESISTOR CH 1/10W 12K	1	
R249		ERJ6GEYJ821	M.RESISTOR CH 1/10W 820	1	
R251-60		ERJ6GEYJ393	M.RESISTOR CH 1/10W 39K	10	
R261		ERJ6GEYJ473	M.RESISTOR CH 1/10W 47K	1	
R262-64		ERJ6GEYG223	M.RESISTOR CH 1/10W 22K	3	
R265		ERJ6GEYJ104	M.RESISTOR CH 1/10W 100K	1	
R266		ERJ6GEYJ122	M.RESISTOR CH 1/10W 1.2K	1	
R267		ERJ6GEYJ473	M.RESISTOR CH 1/10W 47K	1	
R268,69		ERJ6GEYJ153	M.RESISTOR CH 1/10W 15K	2	
R270		ERJ6GEYG223	M.RESISTOR CH 1/10W 22K	1	
R272		ERJ6GEYJ473	M.RESISTOR CH 1/10W 47K	1	
R273		ERJ6GEYJ105	M.RESISTOR CH 1/10W 1M	1	
R274		ERJ6GEYJ104	M.RESISTOR CH 1/10W 100K	1	
R275		ERJ6GEYJ682	M.RESISTOR CH 1/10W 6.8K	1	
R276		ERJ6GEYG223	M.RESISTOR CH 1/10W 22K	1	
R277		ERJ6GEYJ153	M.RESISTOR CH 1/10W 15K	1	
R278		ERJ6GEYJ273	M.RESISTOR CH 1/10W 27K	1	
R279		ERJ6GEYJ332	M.RESISTOR CH 1/10W 3.3K	1	
R280		ERJ6GEYJ682	M.RESISTOR CH 1/10W 6.8K	1	
R281		ERJ6GEY0R00	M.RESISTOR CH 1/10W 0	1	
R282		ERJ6GEYJ471	M.RESISTOR CH 1/10W 470	1	
R283		ERJ6GEYJ333	M.RESISTOR CH 1/10W 33K	1	
R284		ERJ6GEYJ183	M.RESISTOR CH 1/10W 18K	1	
R285		ERJ6GEYJ153	M.RESISTOR CH 1/10W 15K	1	
R288		ERJ6GEYJ105	M.RESISTOR CH 1/10W 1M	1	
R289		ERJ6GEYG223	M.RESISTOR CH 1/10W 22K	1	
R290		ERJ6GEYJ102	M.RESISTOR CH 1/10W 1K	1	
R291		ERJ6GEYJ471	M.RESISTOR CH 1/10W 470	1	
R292		ERJ6GEYG223	M.RESISTOR CH 1/10W 22K	1	
R293		ERJ6GEYJ822	M.RESISTOR CH 1/10W 8.2K	1	
R294		ERJ6GEYJ103	M.RESISTOR CH 1/10W 10K	1	
R295		ERJ6GEYJ105	M.RESISTOR CH 1/10W 1M	1	
R296		ERJ6GEYG223	M.RESISTOR CH 1/10W 22K	1	
R297		ERJ6GEYJ102	M.RESISTOR CH 1/10W 1K	1	
R298-00		ERJ6GEYG223	M.RESISTOR CH 1/10W 22K	3	
R301		ERJ6GEYJ101	M.RESISTOR CH 1/10W 100	1	
R351		ERJ6GEY0R00	M.RESISTOR CH 1/10W 0	1	
R353		ERJ6GEY0R00	M.RESISTOR CH 1/10W 0	1	
R355-58		ERJ6GEY0R00	M.RESISTOR CH 1/10W 0	4	
R361		ERJ6GEY0R00	M.RESISTOR CH 1/10W 0	1	
R366-68		ERJ6GEY0R00	M.RESISTOR CH 1/10W 0	3	
R375		ERJ6GEY0R00	M.RESISTOR CH 1/10W 0	1	
R380		ERJ6GEY0R00	M.RESISTOR CH 1/10W 0	1	
R390-94		ERJ6GEY0R00	M.RESISTOR CH 1/10W 0	5	
R401		ERJ6GEYJ103	M.RESISTOR CH 1/10W 10K	1	
R402		ERJ6GEYJ102	M.RESISTOR CH 1/10W 1K	1	
R403		ERJ6GEYJ393	M.RESISTOR CH 1/10W 39K	1	
R404		ERJ6GEYJ822	M.RESISTOR CH 1/10W 8.2K	1	
R405		ERJ6GEYJ562	M.RESISTOR CH 1/10W 5.6K	1	
R406		ERJ6GEYJ103	M.RESISTOR CH 1/10W 10K	1	
R408		ERJ6GEYJ183	M.RESISTOR CH 1/10W 18K	1	
R409		ERJ6GEYJ681	M.RESISTOR CH 1/10W 680	1	
R410		ERJ6GEYJ332	M.RESISTOR CH 1/10W 3.3K	1	
R411-17		ERJ6GEYJ393	M.RESISTOR CH 1/10W 39K	7	
R418,19		ERJ6GEYJ101	M.RESISTOR CH 1/10W 100	2	
R420		ERJ6GEYJ103	M.RESISTOR CH 1/10W 10K	1	

Ref.No.	Part No.	Part Name & Description	Pcs	Remarks
R421,22	ERJ6GEYJ392	M.RESISTOR CH 1/10W 3.9K	2	
R423	ERJ6GEYJ562	M.RESISTOR CH 1/10W 5.6K	1	
R424	ERJ6GEYJ272	M.RESISTOR CH 1/10W 2.7K	1	
R425	ERJ6GEYJ562	M.RESISTOR CH 1/10W 5.6K	1	
R426	ERJ6GEYJ392	M.RESISTOR CH 1/10W 3.9K	1	
R427	ERJ6GEYJ272	M.RESISTOR CH 1/10W 2.7K	1	
R428	ERJ6GEYG563	M.RESISTOR CH 1/10W 56K	1	
R429	ERJ6GEYJ562	M.RESISTOR CH 1/10W 5.6K	1	
R430	ERJ6GEYJ103	M.RESISTOR CH 1/10W 10K	1	
R431	ERJ6GEYJ183	M.RESISTOR CH 1/10W 18K	1	
R432	ERJ6GEYJ681	M.RESISTOR CH 1/10W 680	1	
R433	ERJ6GEYJ393	M.RESISTOR CH 1/10W 39K	1	
R434	ERJ6GEYJ471	M.RESISTOR CH 1/10W 470	1	
R435	ERJ6GEYJ273	M.RESISTOR CH 1/10W 27K	1	
R436	ERJ6GEYJ823	M.RESISTOR CH 1/10W 82K	1	
R438-41	ERJ6GEY0R00	M.RESISTOR CH 1/10W 0	4	
R444	ERJ6GEY0R00	M.RESISTOR CH 1/10W 0	1	
R445	ERJ6GEYJ152	M.RESISTOR CH 1/10W 1.5K	1	
R446	ERJ6GEYJ392	M.RESISTOR CH 1/10W 3.9K	1	
R447	ERJ6GEYJ562	M.RESISTOR CH 1/10W 5.6K	1	
R448	ERJ6GEY0R00	M.RESISTOR CH 1/10W 0	1	
R450	ERJ6GEYJ393	M.RESISTOR CH 1/10W 39K	1	
R451	ERJ6GEYJ471	M.RESISTOR CH 1/10W 470	1	
R452	ERJ6GEYJ273	M.RESISTOR CH 1/10W 27K	1	
R453	ERJ6GEYJ183	M.RESISTOR CH 1/10W 18K	1	
R454,55	ERJ6GEY0R00	M.RESISTOR CH 1/10W 0	2	
R456	ERJ6GEYG563	M.RESISTOR CH 1/10W 56K	1	
R457	ERJ6GEYJ472	M.RESISTOR CH 1/10W 4.7K	1	
R458	ERJ6GEYJ683	M.RESISTOR CH 1/10W 68K	1	
R459	ERJ6GEYJ103	M.RESISTOR CH 1/10W 10K	1	
R461	ERJ6GEYJ273	M.RESISTOR CH 1/10W 27K	1	
R462	ERJ6GEYJ101	M.RESISTOR CH 1/10W 100	1	
R463	ERJ6GEYJ393	M.RESISTOR CH 1/10W 39K	1	
R464	ERJ6GEYJ562	M.RESISTOR CH 1/10W 5.6K	1	
R465	ERJ6GEYJ183	M.RESISTOR CH 1/10W 18K	1	
R466,67	ERJ6GEYJ182	M.RESISTOR CH 1/10W 1.8K	2	
R468	ERJ6GEYJ153	M.RESISTOR CH 1/10W 15K	1	
R469	ERJ6GEYJ681	M.RESISTOR CH 1/10W 680	1	
R470	ERJ6GEYJ123	M.RESISTOR CH 1/10W 12K	1	
R471	ERJ6GEYJ821	M.RESISTOR CH 1/10W 820	1	
R472	ERJ6GEYJ153	M.RESISTOR CH 1/10W 15K	1	
R473	ERJ6GEYJ182	M.RESISTOR CH 1/10W 1.8K	1	
R474	ERJ6GEYJ153	M.RESISTOR CH 1/10W 15K	1	
R475,76	ERJ6GEYJ332	M.RESISTOR CH 1/10W 3.3K	2	
R477	ERJ6GEYJ222	M.RESISTOR CH 1/10W 2.2K	1	
R478	ERJ6GEYJ562	M.RESISTOR CH 1/10W 5.6K	1	
R480	ERJ6GEYJ273	M.RESISTOR CH 1/10W 27K	1	
R481	ERJ6GEYJ153	M.RESISTOR CH 1/10W 15K	1	
R482	ERJ6GEYJ682	M.RESISTOR CH 1/10W 6.8K	1	
R483	ERJ6GEYJ152	M.RESISTOR CH 1/10W 1.5K	1	
R484,85	ERJ6GEYJ102	M.RESISTOR CH 1/10W 1K	2	
R486	ERJ6GEYG563	M.RESISTOR CH 1/10W 56K	1	
R487	ERJ6GEYJ103	M.RESISTOR CH 1/10W 10K	1	
R488	ERJ6GEYJ123	M.RESISTOR CH 1/10W 12K	1	
R489	ERJ6GEYJ183	M.RESISTOR CH 1/10W 18K	1	
R491	ERJ6GEY0R00	M.RESISTOR CH 1/10W 0	1	
R494-96	ERJ6GEY0R00	M.RESISTOR CH 1/10W 0	3	
R498	ERJ6GEYJ562	M.RESISTOR CH 1/10W 5.6K	1	
R499	ERJ6GEYJ472	M.RESISTOR CH 1/10W 4.7K	1	
R500	ERJ6GEY0R00	M.RESISTOR CH 1/10W 0	1	
R502	ERJ6GEYJ152	M.RESISTOR CH 1/10W 1.5K	1	
R503,04	ERJ6GEYJ102	M.RESISTOR CH 1/10W 1K	2	
R506	ERJ6GEY0R00	M.RESISTOR CH 1/10W 0	1	
R524	ERJ6GEYJ152	M.RESISTOR CH 1/10W 1.5K	1	
R529	ERJ6GEY0R00	M.RESISTOR CH 1/10W 0	1	
R530	ERJ6GEYJ102	M.RESISTOR CH 1/10W 1K	1	
R531	ERJ6GEYJ101	M.RESISTOR CH 1/10W 100	1	
R532	ERJ6GEY0R00	M.RESISTOR CH 1/10W 0	1	
R569	ERJ6GEYJ562	M.RESISTOR CH 1/10W 5.6K	1	
R580	ERJ6GEYJ473	M.RESISTOR CH 1/10W 47K	1	
R581,82	ERJ6GEYJ105	M.RESISTOR CH 1/10W 1M	2	
R583,84	ERJ6GEYJ822	M.RESISTOR CH 1/10W 8.2K	2	
R586	ERJ6GEY0R00	M.RESISTOR CH 1/10W 0	1	
R587	ERJ6GEYJ473	M.RESISTOR CH 1/10W 47K	1	
R588	ERJ6GEYJ104	M.RESISTOR CH 1/10W 100K	1	

Ref.No.	Part No.	Part Name & Description	Pcs	Remarks
R589	ERJ6GEYJ473	M.RESISTOR CH 1/10W 47K	1	
R590,91	ERJ6GEY0R00	M.RESISTOR CH 1/10W 0	2	
R594	ERJ6GEYJ153	M.RESISTOR CH 1/10W 15K	1	
R595	ERJ6GEYJ473	M.RESISTOR CH 1/10W 47K	1	
R596	ERJ6GEYJ103	M.RESISTOR CH 1/10W 10K	1	
R597	ERJ6GEYJ562	M.RESISTOR CH 1/10W 5.6K	1	
R603	ERJ6GEY0R00	M.RESISTOR CH 1/10W 0	1	
R607	ERJ6GEY0R00	M.RESISTOR CH 1/10W 0	1	
SW4	VSS023710	SWITCH	1	
SW5	VSS0184	SWITCH	1	
SW7,W8	VSS0126	SWITCH	2	
SW201	VSS0126	SWITCH	1	
SW203	VSR0045	SWITCH	1	
TP1,P2	VJR0646	TEST POINT	2	
TP201-08	VJR0646	TEST POINT	8	
TP210-15	VJR0646	TEST POINT	6	
TP412,13	VJR0646	TEST POINT	2	
TP416,17	VJR0646	TEST POINT	2	
TP422-27	VJR0646	TEST POINT	6	
TPG201	VJR0646	TEST POINT	1	
TPG401,02	VJR0646	TEST POINT	2	
VR1	VRV0109B103	V.RESISTOR 10K	1	
VR2	VRV0109B202	V.RESISTOR 2K	1	
VR201	VRV0109B203	V.RESISTOR 20K	1	
VR202	VRV0109B103	V.RESISTOR 10K	1	
VR204	VRV0064B502	V.RESISTOR 5K	1	
VR205	VRV0109B502	V.RESISTOR 5K	1	
VR206,07	VRV0064B502	V.RESISTOR 5K	2	
VR401,02	VRV0109B502	V.RESISTOR 5K	2	
VR403	VRV0109B202	V.RESISTOR 2K	1	
VR405,06	VRV0064B502	V.RESISTOR 5K	2	
VR408	VRV0109B202	V.RESISTOR 2K	1	
VR409	VRV0109B502	V.RESISTOR 5K	1	
X201	VSX0114	CRYSTAL OSCILLATOR	1	
X202	VSX0270	CRYSTAL OSCILLATOR	1	
X203,04	VSX0280	CRYSTAL OSCILLATOR	2	
X501	VSX0211	CRYSTAL OSCILLATOR	1	
		MISCELLANEOUS		
	VML2143	CARD PULLER	1	
	VML2144	CARD PULLER	1	
	VMS4925	PIN	1	
	VMZ1547	BARRIER	1	
	VXA3966	P.C.B. SHIELD PLATE	1	
	XYNV3+KGFR	SCREW	7	

Ref.No.		Part No.	Part Name & Description	Pcs	Remarks
	■	VEP88063M	P.C.BOARD W/COMPONENT		FOR AU-65H
			W2 ENCODER		
	■	VEP80632A	P.C.BOARD W/COMPONENT		ON VEP88063M
			W2 SUB		
			CAPACITORS		
C1		ECUM1H103KBN	C.CAPACITOR CH 50V 0.01U	1	
C2		ECEA1CU221	E.CAPACITOR 16V 220U	1	
C3		ECUM1H103KBN	C.CAPACITOR CH 50V 0.01U	1	
C4		ECEA0JU101	E.CAPACITOR 6.3V 100U	1	
C5		ECUM1H103KBN	C.CAPACITOR CH 50V 0.01U	1	
C6		ECEA1CU221	E.CAPACITOR 16V 220U	1	
C7-C9		ECUM1H103KBN	C.CAPACITOR CH 50V 0.01U	3	
C10		ECUM1H103KBN	C.CAPACITOR CH 50V 0.01U	1	
C11		ECEA1AU101	E.CAPACITOR 10V 100U	1	
C12,13		ECUM1H103KBN	C.CAPACITOR CH 50V 0.01U	2	
C14		ECEA1AU101	E.CAPACITOR 10V 100U	1	
C15		ECUM1H470JCN	C.CAPACITOR CH 50V 47P	1	
C16		ECUM1H103KBN	C.CAPACITOR CH 50V 0.01U	1	
C17		ECUM1H120JCN	C.CAPACITOR CH 50V 12P	1	
C18		ECUM1H103KBN	C.CAPACITOR CH 50V 0.01U	1	
C19,20		ECEA1CU221	E.CAPACITOR 16V 220U	2	
C21,22		ECUM1H103KBN	C.CAPACITOR CH 50V 0.01U	2	
C23		ECUM1H470JCN	C.CAPACITOR CH 50V 47P	1	
C24,25		ECUM1H151JCN	C.CAPACITOR CH 50V 150P	2	
C26		ECUM1E104ZFN	C.CAPACITOR CH 25V 0.1U	1	
C27		ECUM1H270JCN	C.CAPACITOR CH 50V 27P	1	
C28		ECQM1H183JF	P.CAPACITOR 50V 0.018U	1	
C29		ECUM1H103KBN	C.CAPACITOR CH 50V 0.01U	1	
C30		ECEA1EN4R7S	E.CAPACITOR 25V 4.7U	1	
C31		ECEA1HN2R2S	E.CAPACITOR 50V 2.2U	1	
C32		ECUM1H103KBN	C.CAPACITOR CH 50V 0.01U	1	
C33		ECEA0JU101	E.CAPACITOR 6.3V 100U	1	
C35		ECEA0JU221	E.CAPACITOR 6.3V 220U	1	
C36		ECUM1H103KBN	C.CAPACITOR CH 50V 0.01U	1	
C37		ECEA0JU221	E.CAPACITOR 6.3V 220U	1	
C38-46		ECUM1H103KBN	C.CAPACITOR CH 50V 0.01U	9	
C49,50		ECUM1H103KBN	C.CAPACITOR CH 50V 0.01U	2	
C51		ECEA1AU101	E.CAPACITOR 10V 100U	1	
C52		ECUM1E104ZFN	C.CAPACITOR CH 25V 0.1U	1	
C53		ECUM1H103KBN	C.CAPACITOR CH 50V 0.01U	1	
C54		ECEA1AU101	E.CAPACITOR 10V 100U	1	
C55		ECUM1H220JCN	C.CAPACITOR CH 50V 22P	1	
C56		ECUM1H103KBN	C.CAPACITOR CH 50V 0.01U	1	
C57		ECUM1H150JCN	C.CAPACITOR CH 50V 15P	1	
C58		ECUM1H103KBN	C.CAPACITOR CH 50V 0.01U	1	
C59		ECEA0JU101	E.CAPACITOR 6.3V 100U	1	
C60		ECUM1H120JCN	C.CAPACITOR CH 50V 12P	1	
C61		ECEA0JU221	E.CAPACITOR 6.3V 220U	1	
C62		ECUM1H103KBN	C.CAPACITOR CH 50V 0.01U	1	
C63		ECEA0JU221	E.CAPACITOR 6.3V 220U	1	
C64-73		ECUM1H103KBN	C.CAPACITOR CH 50V 0.01U	10	
C76		ECUM1H270JCN	C.CAPACITOR CH 50V 27P	1	
C77		ECUM1E104ZFN	C.CAPACITOR CH 25V 0.1U	1	
C78		ECQM1H223JF	P.CAPACITOR 50V 0.022U	1	
C79		ECUM1H103KBN	C.CAPACITOR CH 50V 0.01U	1	
C80,81		ECEA1HN2R2S	E.CAPACITOR 50V 2.2U	2	
C82,83		ECUM1E104ZFN	C.CAPACITOR CH 25V 0.1U	2	
C84		ECEA0JU470	E.CAPACITOR 6.3V 47U	1	
C85,86		ECUM1E104ZFN	C.CAPACITOR CH 25V 0.1U	2	
C87		ECUM1H103KBN	C.CAPACITOR CH 50V 0.01U	1	
C88		ECUM1E104ZFN	C.CAPACITOR CH 25V 0.1U	1	
C89		ECKF1H103ZF	C.CAPACITOR 50V 0.01U	1	
C113		ECUM1E104ZFN	C.CAPACITOR CH 25V 0.1U	1	
C114-17		ECUM1H103KBN	C.CAPACITOR CH 50V 0.01U	4	
C120		ECUM1H103KBN	C.CAPACITOR CH 50V 0.01U	1	
C121		ECEA1AU470	E.CAPACITOR 10V 47U	1	
C122		ECUM1H103KBN	C.CAPACITOR CH 50V 0.01U	1	
C123		ECUM1C104KBN	C.CAPACITOR CH 16V 0.1U	1	
C124		ECUM1H181JCN	C.CAPACITOR CH 50V 180P	1	

Ref.No.		Part No.	Part Name & Description	Pcs	Remarks
C125		ECUM1E104ZFN	C.CAPACITOR CH 25V 0.1U	1	
C126		ECUM1C104KBN	C.CAPACITOR CH 16V 0.1U	1	
C127		ECUM1H180JCN	C.CAPACITOR CH 50V 18P	1	
C128		ECUM1H680JCN	C.CAPACITOR CH 50V 68P	1	
C129,30		ECUM1C104KBN	C.CAPACITOR CH 16V 0.1U	2	
C131		ECEA1HN010S	E.CAPACITOR 50V 1U	1	
C132		ECUM1H103KBN	C.CAPACITOR CH 50V 0.01U	1	
C133		ECEA1AU470	E.CAPACITOR 10V 47U	1	
C134		ECUM1E104ZFN	C.CAPACITOR CH 25V 0.1U	1	
C135		ECUM1H391JCN	C.CAPACITOR CH 50V 390P	1	
C136		ECUM1H151JCN	C.CAPACITOR CH 50V 150P	1	
C137		ECUM1H121JCN	C.CAPACITOR CH 50V 120P	1	
C138		ECUM1H391JCN	C.CAPACITOR CH 50V 390P	1	
C139-41		ECUM1H103KBN	C.CAPACITOR CH 50V 0.01U	3	
C142		ECEA1AU470	E.CAPACITOR 10V 47U	1	
C143,44		ECUM1C104KBN	C.CAPACITOR CH 16V 0.1U	2	
C145		ECUM1H121JCN	C.CAPACITOR CH 50V 120P	1	
C146		ECUM1E104ZFN	C.CAPACITOR CH 25V 0.1U	1	
C147-49		ECUM1C104KBN	C.CAPACITOR CH 16V 0.1U	3	
C150		ECEA1HN010S	E.CAPACITOR 50V 1U	1	
C151		ECUM1H103KBN	C.CAPACITOR CH 50V 0.01U	1	
C152		ECEA1AU470	E.CAPACITOR 10V 47U	1	
C154		ECUM1E104ZFN	C.CAPACITOR CH 25V 0.1U	1	
C155		ECUM1H391JCN	C.CAPACITOR CH 50V 390P	1	
C156		ECUM1H151JCN	C.CAPACITOR CH 50V 150P	1	
C157		ECUM1H121JCN	C.CAPACITOR CH 50V 120P	1	
C158		ECUM1H391JCN	C.CAPACITOR CH 50V 390P	1	
C159,60		ECUM1H821JCN	C.CAPACITOR CH 50V 820P	2	
C161,62		ECEA1AN470S	E.CAPACITOR 10V 47U	2	
C163		ECEA1CU470	E.CAPACITOR 16V 47U	1	
C164		ECQM1H104JF	P.CAPACITOR 50V 0.1U	1	
C165		ECEA1AN470S	E.CAPACITOR 10V 47U	1	
C166		ECUM1H221JCN	C.CAPACITOR CH 50V 220P	1	
C200		ECUM1H103KBN	C.CAPACITOR CH 50V 0.01U	1	
C201		ECEA1AU101	E.CAPACITOR 10V 100U	1	
C202,03		ECUM1H103KBN	C.CAPACITOR CH 50V 0.01U	2	
C204		ECEA1AU101	E.CAPACITOR 10V 100U	1	
C205		ECUM1H103KBN	C.CAPACITOR CH 50V 0.01U	1	
C206		ECUM1H150JCN	C.CAPACITOR CH 50V 15P	1	
C207		ECUM1H470JCN	C.CAPACITOR CH 50V 47P	1	
C209		ECUM1H220JCN	C.CAPACITOR CH 50V 22P	1	
C210		ECUM1H100DCN	C.CAPACITOR CH 50V 10P	1	
C211		ECUM1C104KBN	C.CAPACITOR CH 16V 0.1U	1	
C212		ECUM1E104ZFN	C.CAPACITOR CH 25V 0.1U	1	
C213		ECUM1H221JCN	C.CAPACITOR CH 50V 220P	1	
C214		ECUM1H270JCN	C.CAPACITOR CH 50V 27P	1	
C215		ECUM1H103KBN	C.CAPACITOR CH 50V 0.01U	1	
C219		ECUM1H560JCN	C.CAPACITOR CH 50V 56P	1	
C220		ECUM1E104ZFN	C.CAPACITOR CH 25V 0.1U	1	
C223		ECUM1H221JCN	C.CAPACITOR CH 50V 220P	1	
C224		ECUM1H030DCN	C.CAPACITOR CH 50V 3P	1	
C226		ECEA1HNR47S	E.CAPACITOR 50V 0.47U	1	
C227,28		ECUM1H103KBN	C.CAPACITOR CH 50V 0.01U	2	
C229		ECEA1AU101	E.CAPACITOR 10V 100U	1	
C230,31		ECUM1H103KBN	C.CAPACITOR CH 50V 0.01U	2	
C232		ECEA1AU101	E.CAPACITOR 10V 100U	1	
C233		ECUM1H103KBN	C.CAPACITOR CH 50V 0.01U	1	
C235		ECUM1H120JCN	C.CAPACITOR CH 50V 12P	1	
C236		ECUM1H560JCN	C.CAPACITOR CH 50V 56P	1	
C238		ECUM1H100DCN	C.CAPACITOR CH 50V 10P	1	
C239		ECUM1H680JCN	C.CAPACITOR CH 50V 68P	1	
C240		ECUM1H330JCN	C.CAPACITOR CH 50V 33P	1	
C241		ECUM1H100DCN	C.CAPACITOR CH 50V 10P	1	
C242		ECEA1HNR47S	E.CAPACITOR 50V 0.47U	1	
C243		ECUM1C104KBN	C.CAPACITOR CH 16V 0.1U	1	
C244		ECUM1E104ZFN	C.CAPACITOR CH 25V 0.1U	1	
C245		ECUM1H103KBN	C.CAPACITOR CH 50V 0.01U	1	
C247		ECUM1H103KBN	C.CAPACITOR CH 50V 0.01U	1	
C248		ECEA0JU470	E.CAPACITOR 6.3V 47U	1	
C249		ECUM1H103KBN	C.CAPACITOR CH 50V 0.01U	1	
C257,58		ECUM1E104ZFN	C.CAPACITOR CH 25V 0.1U	2	
C260		ECUM1H221JCN	C.CAPACITOR CH 50V 220P	1	
C261		ECUM1H030DCN	C.CAPACITOR CH 50V 3P	1	
C263		ECUM1H103KBN	C.CAPACITOR CH 50V 0.01U	1	
C264		ECEA1HNR47S	E.CAPACITOR 50V 0.47U	1	

Ref.No.	Part No.	Part Name & Description	Pcs	Remarks
C266,67	ECUM1E104ZFN	C.CAPACITOR CH 25V 0.1U	2	
C268	ECUM1H103KBN	C.CAPACITOR CH 50V 0.01U	1	
C269	ECEA1AU101	E.CAPACITOR 10V 100U	1	
C270,71	ECUM1H103KBN	C.CAPACITOR CH 50V 0.01U	2	
C272	ECEA1AU101	E.CAPACITOR 10V 100U	1	
C273	ECUM1H103KBN	C.CAPACITOR CH 50V 0.01U	1	
C275	ECUM1H120JCN	C.CAPACITOR CH 50V 12P	1	
C276	ECUM1H560JCN	C.CAPACITOR CH 50V 56P	1	
C278	ECUM1H100DCN	C.CAPACITOR CH 50V 10P	1	
C279	ECUM1H680JCN	C.CAPACITOR CH 50V 68P	1	
C280	ECUM1H330JCN	C.CAPACITOR CH 50V 33P	1	
C281	ECUM1H100DCN	C.CAPACITOR CH 50V 10P	1	
C282	ECUM1C104KBN	C.CAPACITOR CH 16V 0.1U	1	
C283	ECUM1E104ZFN	C.CAPACITOR CH 25V 0.1U	1	
C284	ECUM1H103KBN	C.CAPACITOR CH 50V 0.01U	1	
C291	ECUM1H103KBN	C.CAPACITOR CH 50V 0.01U	1	
C292	ECEA1CU221	E.CAPACITOR 16V 220U	1	
C293	ECUM1H103KBN	C.CAPACITOR CH 50V 0.01U	1	
C294	ECEA0JU101	E.CAPACITOR 6.3V 100U	1	
C297,98	ECUM1E104ZFN	C.CAPACITOR CH 25V 0.1U	2	
C299	ECUM1H103KBN	C.CAPACITOR CH 50V 0.01U	1	
C300	ECEA1AU101	E.CAPACITOR 10V 100U	1	
C301	ECUM1H103KBN	C.CAPACITOR CH 50V 0.01U	1	
C303	ECUM1H271JCN	C.CAPACITOR CH 50V 270P	1	
C304	ECUM1H330JCN	C.CAPACITOR CH 50V 33P	1	
C305,06	ECEA1HNR47S	E.CAPACITOR 50V 0.47U	2	
C307,08	ECQM1H104JF	P.CAPACITOR 50V 0.1U	2	
C311	ECUM1H560JCN	C.CAPACITOR CH 50V 56P	1	
C312,13	ECUM1H120JCN	C.CAPACITOR CH 50V 12P	2	
C314	ECUM1H560JCN	C.CAPACITOR CH 50V 56P	1	
C501,02	ECEA1CU101	E.CAPACITOR 16V 100U	2	
C503	ECUM1H330JCN	C.CAPACITOR CH 50V 33P	1	
C504	ECUM1C104KBN	C.CAPACITOR CH 16V 0.1U	1	
C505	ECUM1H103KBN	C.CAPACITOR CH 50V 0.01U	1	
C506	ECEA1HNR47S	E.CAPACITOR 50V 0.47U	1	
C507,08	ECUM1H103KBN	C.CAPACITOR CH 50V 0.01U	2	
C510	ECUM1H103KBN	C.CAPACITOR CH 50V 0.01U	1	
C517	ECUM1H103KBN	C.CAPACITOR CH 50V 0.01U	1	
C518	ECUM1H330JCN	C.CAPACITOR CH 50V 33P	1	
C519,20	ECUM1H103KBN	C.CAPACITOR CH 50V 0.01U	2	
C521	ECEA0JU470	E.CAPACITOR 6.3V 47U	1	
C522	ECUM1H220JCN	C.CAPACITOR CH 50V 22P	1	
C523	ECUM1H181JCN	C.CAPACITOR CH 50V 180P	1	
C524	ECUM1H103KBN	C.CAPACITOR CH 50V 0.01U	1	
C525	ECEA0JU101	E.CAPACITOR 6.3V 100U	1	
C526	ECUM1H103KBN	C.CAPACITOR CH 50V 0.01U	1	
C527,28	ECEA1CU101	E.CAPACITOR 16V 100U	2	
C531	ECEA1CU101	E.CAPACITOR 16V 100U	1	
C532	ECUM1H103KBN	C.CAPACITOR CH 50V 0.01U	1	
C533	ECEA1CU101	E.CAPACITOR 16V 100U	1	
C534,35	ECUM1H103KBN	C.CAPACITOR CH 50V 0.01U	2	
C536,37	ECUM1H560JCN	C.CAPACITOR CH 50V 56P	2	
C538,39	ECUM1H103KBN	C.CAPACITOR CH 50V 0.01U	2	
C540	ECUM1E104ZFN	C.CAPACITOR CH 25V 0.1U	1	
C541	ECUM1H270JCN	C.CAPACITOR CH 50V 27P	1	
C542	ECUM1H221JCN	C.CAPACITOR CH 50V 220P	1	
C543	ECUM1H120JCN	C.CAPACITOR CH 50V 12P	1	
C546	ECUM1H101JCN	C.CAPACITOR CH 50V 100P	1	
C547	ECUM1H470JCN	C.CAPACITOR CH 50V 47P	1	
C548	ECUM1H100DCN	C.CAPACITOR CH 50V 10P	1	
C549	ECUM1H330JCN	C.CAPACITOR CH 50V 33P	1	
C550	ECUM1H103KBN	C.CAPACITOR CH 50V 0.01U	1	
C551	ECUM1H471JCN	C.CAPACITOR CH 50V 470P	1	
C552	ECUM1H270JCN	C.CAPACITOR CH 50V 27P	1	
C553	ECUM1H103KBN	C.CAPACITOR CH 50V 0.01U	1	
C554	ECUM1E104ZFN	C.CAPACITOR CH 25V 0.1U	1	
C555	ECUM1H103KBN	C.CAPACITOR CH 50V 0.01U	1	
C559	ECEA0JU470	E.CAPACITOR 6.3V 47U	1	
C560	ECUM1H103KBN	C.CAPACITOR CH 50V 0.01U	1	
C561	ECEA0JN330S	E.CAPACITOR 6.3V 33U	1	
C562	ECUM1H680JCN	C.CAPACITOR CH 50V 68P	1	
C563	ECUM1H271JCN	C.CAPACITOR CH 50V 270P	1	
C564	ECUM1H151JCN	C.CAPACITOR CH 50V 150P	1	
C565	ECUM1H471JCN	C.CAPACITOR CH 50V 470P	1	
C566	ECEA1CU470	E.CAPACITOR 16V 47U	1	

Ref.No.	Part No.	Part Name & Description	Pcs	Remarks
C567-69	ECUM1H103KBN	C.CAPACITOR CH 50V 0.01U	3	
C570	ECEA1CU470	E.CAPACITOR 16V 47U	1	
C571	ECUM1H103KBN	C.CAPACITOR CH 50V 0.01U	1	
C572	ECUM1E104ZFN	C.CAPACITOR CH 25V 0.1U	1	
C573	ECUM1H103KBN	C.CAPACITOR CH 50V 0.01U	1	
C574,75	ECUM1H220JCN	C.CAPACITOR CH 50V 22P	2	
C576,77	ECUM1H103KBN	C.CAPACITOR CH 50V 0.01U	2	
C578	ECEA0JU101	E.CAPACITOR 6.3V 100U	1	
C579	ECUM1E104ZFN	C.CAPACITOR CH 25V 0.1U	1	
C580,81	ECUM1H220JCN	C.CAPACITOR CH 50V 22P	2	
C582	ECEA0JU101	E.CAPACITOR 6.3V 100U	1	
C583	ECUM1E104ZFN	C.CAPACITOR CH 25V 0.1U	1	
C584	ECUM1H103KBN	C.CAPACITOR CH 50V 0.01U	1	
C585	ECUM1H820JCN	C.CAPACITOR CH 50V 82P	1	
C586	ECUM1H100DCN	C.CAPACITOR CH 50V 10P	1	
C587,88	ECUM1H103KBN	C.CAPACITOR CH 50V 0.01U	2	
C589	ECUM1H271JCN	C.CAPACITOR CH 50V 270P	1	
C590	ECUM1H221JCN	C.CAPACITOR CH 50V 220P	1	
C591	ECUM1H820JCN	C.CAPACITOR CH 50V 82P	1	
C592-97	ECUM1H103KBN	C.CAPACITOR CH 50V 0.01U	6	
C598	ECEA1CU101	E.CAPACITOR 16V 100U	1	
C599,00	ECUM1H103KBN	C.CAPACITOR CH 50V 0.01U	2	
C601	ECEA1CU101	E.CAPACITOR 16V 100U	1	
C602	ECUM1H103KBN	C.CAPACITOR CH 50V 0.01U	1	
C603	ECEA1AU101	E.CAPACITOR 10V 100U	1	
C604	ECUM1H103KBN	C.CAPACITOR CH 50V 0.01U	1	
C605	ECEA1AU101	E.CAPACITOR 10V 100U	1	
C606	ECUM1H103KBN	C.CAPACITOR CH 50V 0.01U	1	
C607	ECEA0JU101	E.CAPACITOR 6.3V 100U	1	
C608	ECUM1H103KBN	C.CAPACITOR CH 50V 0.01U	1	
C609	ECEA0JU101	E.CAPACITOR 6.3V 100U	1	
C610	ECUM1H103KBN	C.CAPACITOR CH 50V 0.01U	1	
C611	ECUM1E104ZFN	C.CAPACITOR CH 25V 0.1U	1	
C612	ECUM1H103KBN	C.CAPACITOR CH 50V 0.01U	1	
C615-18	ECUM1H103KBN	C.CAPACITOR CH 50V 0.01U	4	
C619	ECUM1H221JCN	C.CAPACITOR CH 50V 220P	1	
C620	ECQM1H104JF	P.CAPACITOR 50V 0.1U	1	
C621	ECEA1CU100	E.CAPACITOR 16V 10U	1	
C622	ECQM1H104JF	P.CAPACITOR 50V 0.1U	1	
C623	ECEA1CU470	E.CAPACITOR 16V 47U	1	
C624	ECQM1H104JF	P.CAPACITOR 50V 0.1U	1	
C625	ECEA1CU470	E.CAPACITOR 16V 47U	1	
C626	ECQM1H104JF	P.CAPACITOR 50V 0.1U	1	
C627,28	ECUM1H122JN	C.CAPACITOR CH 50V 1200P	2	
C629	ECUM1H221JCN	C.CAPACITOR CH 50V 220P	1	
C630,31	ECUM1H122JN	C.CAPACITOR CH 50V 1200P	2	
C632	ECUM1H103KBN	C.CAPACITOR CH 50V 0.01U	1	
C635	ECCF1H120JC	C.CAPACITOR 50V 12P	1	
C800	ECUM1H122JN	C.CAPACITOR CH 50V 1200P	1	
C801	ECUM1H151JCN	C.CAPACITOR CH 50V 150P	1	
C802	ECQM1H122JF	P.CAPACITOR 50V 1200P	1	
C803	ECQV1H684JZ	P.CAPACITOR 50V 0.68U	1	
C804,06	ECUM1H151JCN	C.CAPACITOR CH 50V 150P	2	
C808	ECUM1H151JCN	C.CAPACITOR CH 50V 150P	1	
C809,10	ECUM1H122JN	C.CAPACITOR CH 50V 1200P	2	
C812	ECUM1H103KBN	C.CAPACITOR CH 50V 0.01U	1	
C813	ECUM1H101JCN	C.CAPACITOR CH 50V 100P	1	
C814-22	ECUM1H122JN	C.CAPACITOR CH 50V 1200P	9	
C823-25	ECUM1E104ZFN	C.CAPACITOR CH 25V 0.1U	3	
C827	ECEA0JU101	E.CAPACITOR 6.3V 100U	1	
C828,29	ECUM1H101JCN	C.CAPACITOR CH 50V 100P	2	
C830	ECUM1H820JCN	C.CAPACITOR CH 50V 82P	1	
C831	ECUM1H103KBN	C.CAPACITOR CH 50V 0.01U	1	
C832	ECUM1E104ZFN	C.CAPACITOR CH 25V 0.1U	1	
C834	ECEA1CN100S	E.CAPACITOR 16V 10U	1	
C835	ECEA1EN4R7S	E.CAPACITOR 25V 4.7U	1	
C836	ECEA0JN330S	E.CAPACITOR 6.3V 33U	1	
C837	ECEA1EN4R7S	E.CAPACITOR 25V 4.7U	1	
C838	ECUM1E104ZFN	C.CAPACITOR CH 25V 0.1U	1	
C841	ECUM1H103KBN	C.CAPACITOR CH 50V 0.01U	1	
C842	ECEA0JU101	E.CAPACITOR 6.3V 100U	1	
C843,44	ECUM1H103KBN	C.CAPACITOR CH 50V 0.01U	2	
C845	ECEA0JU101	E.CAPACITOR 6.3V 100U	1	
C846,47	ECUM1H103KBN	C.CAPACITOR CH 50V 0.01U	2	
C848	ECEA0JU101	E.CAPACITOR 6.3V 100U	1	

Ref.No.	Part No.	Part Name & Description	Pcs	Remarks
C849	ECUM1H103KBN	C.CAPACITOR CH 50V 0.01U	1	
C850	ECEA0JU101	E.CAPACITOR 6.3V 100U	1	
C851	ECUM1H820JCN	C.CAPACITOR CH 50V 82P	1	
C852	ECUM1H103KBN	C.CAPACITOR CH 50V 0.01U	1	
C853	ECUM1H122JN	C.CAPACITOR CH 50V 1200P	1	
C854	ECQB1H272JF	P.CAPACITOR 50V 2700P	1	
C855,56	ECCF1H331JC	C.CAPACITOR 50V 330P	2	
C857	ECCF1H330JC	C.CAPACITOR 50V 33P	1	
C1001	ECEA1HU010	E.CAPACITOR 50V 1U	1	
C1003,04	ECEA1CN100S	E.CAPACITOR 16V 10U	2	
C1005	ECUM1H221JCN	C.CAPACITOR CH 50V 220P	1	
C1006	ECUM1H470JCN	C.CAPACITOR CH 50V 47P	1	
D1	1SZ51	DIODE	1	
D2	MA153	DIODE	1	
D4	MA153	DIODE	1	
D8	MA151WK	DIODE	1	
D11	MA151WK	DIODE	1	
D200,01	RD4.7EB2	ZENER 4.7V	2	
D203,04	MA151K	DIODE	2	
D210	MA151K	DIODE	1	
D501	RD3.6EB	ZENER 3.6V	1	
D508	RD4.7EB2	ZENER 4.7V	1	
D510,11	MA335-R	DIODE	2	
D512	MA153	DIODE	1	
D514	MA151K	DIODE	1	
D800	MA704	DIODE	1	
D801	MA153	DIODE	1	
D802	MA151K	DIODE	1	
D803	MA165TA	DIODE	1	
FL1	VLFO650	FILTER	1	
FL3	VLFO754	FILTER	1	
FL200	VLFO712	FILTER	1	
FL201,02	VLFO753	FILTER	2	
IC1	AN78N09	IC	1	
IC1	MC10107L	IC	1	
IC2	AN79N09	IC	1	
IC3	MC74HC4053F	IC	1	
IC4-C6	TL082CPS	IC	3	
IC7	HA19211BNT	IC	1	
IC8	MC74HC574AF	IC	1	
IC9	TL082CPS	IC	1	
IC10-12	TL082CPS	IC	3	
IC13	HA19211BNT	IC	1	
IC14	MC74HC574AF	IC	1	
IC15	AN78N09	IC	1	
IC16	AN79N09	IC	1	
IC17	AN79L05	IC	1	
IC18,19	AN78N05	IC	2	
IC26,27	AN91A12S	IC	2	
IC28	MC74HC08AF	IC	1	
IC29	SN74LS123NS	IC	1	
IC30	NE521D	IC	1	
IC32	AN78N05	IC	1	
IC33	AN79N05	IC	1	
IC200	AN78N09	IC	1	
IC201	AN79N09	IC	1	
IC202	AN78N09	IC	1	
IC203	AN79N09	IC	1	
IC204	AN78N09	IC	1	
IC205	AN79N09	IC	1	
IC206	TL082CPS	IC	1	
IC207	CA3054	IC	1	
IC208-10	TL082CPS	IC	3	
IC211	AN78L05	IC	1	
IC215	TL082CPS	IC	1	
IC216	AN79L09	IC	1	

Ref.No.	Part No.	Part Name & Description	Pcs	Remarks
IC501	TL082CPS	IC	1	
IC502,03	CA3054	IC	2	
IC504,05	NJM1496M	IC	2	
IC506	10116D	IC	1	
IC507	MC74HC04AF	IC	1	
IC508	NJM1496M	IC	1	
IC509	MC74HC00AF	IC	1	
IC510	MC74HC74AF	IC	1	
IC511	SN74LS123NS	IC	1	
IC512	10116D	IC	1	
IC513	MC74HC00AF	IC	1	
IC514	MC74HC74AF	IC	1	
IC517	AN78N09	IC	1	
IC518	AN79N09	IC	1	
IC519	AN78N05	IC	1	
IC520	AN79N05	IC	1	
IC521	AN78N09	IC	1	
IC522	AN79N09	IC	1	
IC523	MC74HC04AF	IC	1	
IC800	NE521D	IC	1	
IC801	MC74HC126AF	IC	1	
IC802,03	MC10125L	IC	2	
IC804	MN53010VYD	IC	1	
IC805	UPC311G	IC	1	
IC806	MC74HC126AF	IC	1	
IC807-14	TL082CPS	IC	8	
IC815-17	MC74HC4053F	IC	3	
IC818	AN78N09	IC	1	
IC819	AN79N09	IC	1	
IC820	AN78N05	IC	1	
IC821	AN79N05	IC	1	
L1-L3	VLP0017	COIL	3	
L5	VLQEL05S821J	COIL 820UH	1	
L6-L9	VLP0017	COIL	4	
L10	VLQEL05S221J	COIL 220UH	1	
L12	VLQEL05S5R6J	COIL 5.6UH	1	
L13	VLQEL05S390J	COIL 39UH	1	
L14	VLQEL05S100J	COIL 10UH	1	
L15	VLQEL05S5R6J	COIL 5.6UH	1	
L17	VLQEL05S5R6J	COIL 5.6UH	1	
L18	VLQEL05S390J	COIL 39UH	1	
L19	VLQEL05S100J	COIL 10UH	1	
L20	VLQEL05S5R6J	COIL 5.6UH	1	
L200	VLQEL05S6R8J	COIL 6.8UH	1	
L201	VLQEL05S151J	COIL 150UH	1	
L203	VLQEL05S151J	COIL 150UH	1	
L205,06	VLP0017	COIL	2	
L208,09	VLQEL05S6R8J	COIL 6.8UH	2	
L210	VLQEL05S101J	COIL 100UH	1	
L211,12	VLQEL05S6R8J	COIL 6.8UH	2	
L501,02	VLQEL05S101K	COIL 100UH	2	
L503	VLQEL05S6R8J	COIL 6.8UH	1	
L505	VLQEL05S101K	COIL 100UH	1	
L506	VLQEL05S680J	COIL 68UH	1	
L507,08	VLQEL05S101K	COIL 100UH	2	
L511	VLQEL05S150J	COIL 15UH	1	
L512	VLQEL05S5R6J	COIL 5.6UH	1	
L513	VLQEL05S6R8J	COIL 6.8UH	1	
L514	VLQEL05S180J	COIL 18UH	1	
L515	VLQEL05S560J	COIL 56UH	1	
L518,19	VLQEL05S101K	COIL 100UH	2	
L520,21	VLQEL05S470J	COIL 47UH	2	
L522,23	VLP0017	COIL	2	
L801	VLQEL05S8R2J	COIL 8.2UH	1	
Q1	2SD601-R	TRANSISTOR CHIP	1	(Q,R)
Q2	2SB709-R	TRANSISTOR CHIP	1	(Q,R)
Q3	2SD601-R	TRANSISTOR CHIP	1	(Q,R)
Q4,Q5	2SB709-R	TRANSISTOR CHIP	2	(Q,R)
Q6,Q7	2SC2404-C	TRANSISTOR CHIP	2	(C,D)

Ref.No.	Part No.	Part Name & Description	Pcs	Remarks
Q8	2SA1022-B	TRANSISTOR CHIP	1	(B,C)
Q9	2SC2295-B	TRANSISTOR CHIP	1	(B,C)
Q10	2SA1022-B	TRANSISTOR CHIP	1	(B,C)
Q11	2SK374-R	TRANSISTOR	1	(Q,R)
Q12	2SB709-R	TRANSISTOR CHIP	1	(Q,R)
Q13	2SD601-R	TRANSISTOR CHIP	1	(Q,R)
Q14	2SB709-R	TRANSISTOR CHIP	1	(Q,R)
Q15	2SD601-R	TRANSISTOR CHIP	1	(Q,R)
Q16	2SB709-R	TRANSISTOR CHIP	1	(Q,R)
Q17,18	2SC2404-C	TRANSISTOR CHIP	2	(C,D)
Q19	2SA1022-B	TRANSISTOR CHIP	1	(B,C)
Q20	2SC2295-B	TRANSISTOR CHIP	1	(B,C)
Q21	2SA1022-B	TRANSISTOR CHIP	1	(B,C)
Q22	2SK374-R	TRANSISTOR	1	(Q,R)
Q23	2SB709-R	TRANSISTOR CHIP	1	(Q,R)
Q24	2SD601-R	TRANSISTOR CHIP	1	(Q,R)
Q25	2SA1022-B	TRANSISTOR CHIP	1	(B,C)
Q26-28	2SD601-R	TRANSISTOR CHIP	3	(Q,R)
Q200	2SD601-R	TRANSISTOR CHIP	1	(Q,R)
Q201,02	2SB709-R	TRANSISTOR CHIP	2	(Q,R)
Q203,04	2SD601-R	TRANSISTOR CHIP	2	(Q,R)
Q205,06	2SC2404-C	TRANSISTOR CHIP	2	(C,D)
Q207	2SA1022-B	TRANSISTOR CHIP	1	(B,C)
Q208	2SC2295-B	TRANSISTOR CHIP	1	(B,C)
Q209	2SD601-R	TRANSISTOR CHIP	1	(Q,R)
Q210	2SK198	TRANSISTOR	1	(Q,R)
Q211-15	2SD601-R	TRANSISTOR CHIP	5	(Q,R)
Q219	2SD601-R	TRANSISTOR CHIP	1	(Q,R)
Q220,21	2SB709-R	TRANSISTOR CHIP	2	(Q,R)
Q222	2SD601-R	TRANSISTOR CHIP	1	(Q,R)
Q223,24	2SC2404-C	TRANSISTOR CHIP	2	(C,D)
Q225	2SA1022-B	TRANSISTOR CHIP	1	(B,C)
Q226	2SC2295-B	TRANSISTOR CHIP	1	(B,C)
Q227	2SD601-R	TRANSISTOR CHIP	1	(Q,R)
Q229	2SB709-R	TRANSISTOR CHIP	1	(Q,R)
Q230	2SD601-R	TRANSISTOR CHIP	1	(Q,R)
Q232,33	2SB709-R	TRANSISTOR CHIP	2	(Q,R)
Q234	2SD601-R	TRANSISTOR CHIP	1	(Q,R)
Q235,36	2SC2404-C	TRANSISTOR CHIP	2	(C,D)
Q237	2SK198	TRANSISTOR	1	(Q,R)
Q238,39	2SB709-R	TRANSISTOR CHIP	2	(Q,R)
Q240	2SD601-R	TRANSISTOR CHIP	1	(Q,R)
Q241,42	2SC2404-C	TRANSISTOR CHIP	2	(C,D)
Q243	2SA1022-B	TRANSISTOR CHIP	1	(B,C)
Q244	2SC2295-B	TRANSISTOR CHIP	1	(B,C)
Q245	2SD601-R	TRANSISTOR CHIP	1	(Q,R)
Q246	2SK198	TRANSISTOR	1	(Q,R)
Q247	2SB709-R	TRANSISTOR CHIP	1	(Q,R)
Q248,49	2SD601-R	TRANSISTOR CHIP	2	(Q,R)
Q250,51	2SB709-R	TRANSISTOR CHIP	2	(Q,R)
Q252	2SD601-R	TRANSISTOR CHIP	1	(Q,R)
Q253,54	2SC2404-C	TRANSISTOR CHIP	2	(C,D)
Q255	2SK198	TRANSISTOR	1	(Q,R)
Q256	2SC2404-C	TRANSISTOR CHIP	1	(C,D)
Q257	2SB709-R	TRANSISTOR CHIP	1	(Q,R)
Q258	2SA1022-B	TRANSISTOR CHIP	1	(B,C)
Q259-63	2SC2295-B	TRANSISTOR CHIP	5	(B,C)
Q265	2SC2295-B	TRANSISTOR CHIP	1	(B,C)
Q266,67	2SD601-R	TRANSISTOR CHIP	2	(Q,R)
Q284	2SK198	TRANSISTOR	1	(Q,R)
Q285	2SC2295-B	TRANSISTOR CHIP	1	(B,C)
Q286,87	2SD601-R	TRANSISTOR CHIP	2	(Q,R)
Q288,89	2SB709-R	TRANSISTOR CHIP	2	(Q,R)
Q290	2SD601-R	TRANSISTOR CHIP	1	(Q,R)
Q291,92	2SB709-R	TRANSISTOR CHIP	2	(Q,R)
Q501,02	2SC2295-B	TRANSISTOR CHIP	2	(B,C)
Q503,04	2SD601-R	TRANSISTOR CHIP	2	(Q,R)
Q505	2SK198	TRANSISTOR	1	(Q,R)
Q506	2SB709-R	TRANSISTOR CHIP	1	(Q,R)
Q507-09	2SD601-R	TRANSISTOR CHIP	3	(Q,R)
Q514-16	2SD601-R	TRANSISTOR CHIP	3	(Q,R)
Q518	2SD601-R	TRANSISTOR CHIP	1	(Q,R)
Q519	2SC2295-B	TRANSISTOR CHIP	1	(B,C)
Q520	2SD601-R	TRANSISTOR CHIP	1	(Q,R)
Q521,22	2SC2295-B	TRANSISTOR CHIP	2	(B,C)

Ref.No.	Part No.	Part Name & Description	Pcs	Remarks
Q523	2SD601-R	TRANSISTOR CHIP	1	(Q,R)
Q524,25	2SB709-R	TRANSISTOR CHIP	2	(Q,R)
Q526,27	2SC2295-B	TRANSISTOR CHIP	2	(B,C)
Q528	2SD601-R	TRANSISTOR CHIP	1	(Q,R)
Q532	2SB709-R	TRANSISTOR CHIP	1	(Q,R)
Q533-37	2SD601-R	TRANSISTOR CHIP	5	(Q,R)
Q538	2SB709-R	TRANSISTOR CHIP	1	(Q,R)
Q539	2SD601-R	TRANSISTOR CHIP	1	(Q,R)
Q540	2SB709-R	TRANSISTOR CHIP	1	(Q,R)
Q541	2SD601-R	TRANSISTOR CHIP	1	(Q,R)
Q542	2SB709-R	TRANSISTOR CHIP	1	(Q,R)
Q543	2SD601-R	TRANSISTOR CHIP	1	(Q,R)
Q544	2SB709-R	TRANSISTOR CHIP	1	(Q,R)
Q545-52	2SD601-R	TRANSISTOR CHIP	8	(Q,R)
Q800	2SC2295-B	TRANSISTOR CHIP	1	(B,C)
Q801	2SD601-R	TRANSISTOR CHIP	1	(Q,R)
Q802	2SB709-R	TRANSISTOR CHIP	1	(Q,R)
Q803	2SC2295-B	TRANSISTOR CHIP	1	(B,C)
Q804	2SB709-R	TRANSISTOR CHIP	1	(Q,R)
Q805	2SC2295-B	TRANSISTOR CHIP	1	(B,C)
Q807	2SD601-R	TRANSISTOR CHIP	1	(Q,R)
Q808-15	2SC2295-B	TRANSISTOR CHIP	8	(B,C)
Q816,17	2SB709-R	TRANSISTOR CHIP	2	(Q,R)
Q818,19	2SC2295-B	TRANSISTOR CHIP	2	(B,C)
Q826	ECUM1E104ZFN	C.CAPACITOR CH 25V 0.1U	1	
Q833	ECUM1E104ZFN	C.CAPACITOR CH 25V 0.1U	1	
		RESISTORS		
R1	ERJ6GEYG222	M.RESISTOR CH 1/10W 2.2K	1	
R2,R3	ERJ6GEYG220	M.RESISTOR CH 1/10W 22	2	
R4,R5	ERJ6GEYG152	M.RESISTOR CH 1/10W 1.5K	2	
R6,R7	VRE0034E561	M.RESISTOR CH 1/10W 560	2	
R8	ERJ6GEYG150	M.RESISTOR CH 1/10W 15	1	
R9	ERJ6GEYG473	M.RESISTOR CH 1/10W 47K	1	
R10	VRE0034E301	M.RESISTOR CH 1/10W 300	1	
R11	ERJ6GEYG220	M.RESISTOR CH 1/10W 22	1	
R12	ERJ6GEYG122	M.RESISTOR CH 1/10W 1.2K	1	
R13	VRE0034E221	M.RESISTOR CH 1/10W 220	1	
R14	VRE0034E121	M.RESISTOR CH 1/10W 120	1	
R15	VRE0034E301	M.RESISTOR CH 1/10W 300	1	
R16	ERJ6GEYG683	M.RESISTOR CH 1/10W 68K	1	
R17	ERJ6GEYG332	M.RESISTOR CH 1/10W 3.3K	1	
R18	ERJ6GEYG151	M.RESISTOR CH 1/10W 150	1	
R19	ERJ6GEYG101	M.RESISTOR CH 1/10W 100	1	
R20	ERJ6GEYG472	M.RESISTOR CH 1/10W 4.7K	1	
R21	ERJ6GEYG183	M.RESISTOR CH 1/10W 18K	1	
R22	ERJ6GEYG821	M.RESISTOR CH 1/10W 820	1	
R23,24	ERJ6GEYG102	M.RESISTOR CH 1/10W 1K	2	
R25,26	ERJ6GEYG101	M.RESISTOR CH 1/10W 100	2	
R27	ERJ6GEYG122	M.RESISTOR CH 1/10W 1.2K	1	
R28	ERJ6GEYG471	M.RESISTOR CH 1/10W 470	1	
R29	ERJ6GEYG222	M.RESISTOR CH 1/10W 2.2K	1	
R30	ERJ6GEYG272	M.RESISTOR CH 1/10W 2.7K	1	
R31	VRE0034E333	M.RESISTOR CH 1/10W 33K	1	
R32	VRE0034E103	M.RESISTOR CH 1/10W 10K	1	
R33	ERJ6GEYG222	M.RESISTOR CH 1/10W 2.2K	1	
R34	ERJ6GEYG223	M.RESISTOR CH 1/10W 22K	1	
R35	ERJ6GEYG562	M.RESISTOR CH 1/10W 5.6K	1	
R36,37	ERJ6GEYG332	M.RESISTOR CH 1/10W 3.3K	2	
R38	ERJ6GEYG823	M.RESISTOR CH 1/10W 82K	1	
R39	ERJ6GEYG332	M.RESISTOR CH 1/10W 3.3K	1	
R40	ERJ6GEYG222	M.RESISTOR CH 1/10W 2.2K	1	
R41	ERJ6GEYG563	M.RESISTOR CH 1/10W 56K	1	
R42	ERJ6GEYG333	M.RESISTOR CH 1/10W 33K	1	
R43	ERJ6GEYG332	M.RESISTOR CH 1/10W 3.3K	1	
R44	ERJ6GEYG272	M.RESISTOR CH 1/10W 2.7K	1	
R45	ERJ6GEYG273	M.RESISTOR CH 1/10W 27K	1	
R46	ERJ6GEYG224	M.RESISTOR CH 1/10W 220K	1	
R47	ERJ6GEYG472	M.RESISTOR CH 1/10W 4.7K	1	
R48	ERJ6GEYG272	M.RESISTOR CH 1/10W 2.7K	1	
R49	ERJ6GEYG221	M.RESISTOR CH 1/10W 220	1	
R50	ERJ6GEYG391	M.RESISTOR CH 1/10W 390	1	
R51	VRE0034E273	M.RESISTOR CH 1/10W 27K	1	

Ref.No.	Part No.	Part Name & Description	Pcs	Remarks
R52	VRE0034E203	M.RESISTOR CH 1/10W 20K	1	
R53	VRE0034E153	M.RESISTOR CH 1/10W 15K	1	
R54	ERJ6GEYG220	M.RESISTOR CH 1/10W 22	1	
R55	ERJ6GEYG222	M.RESISTOR CH 1/10W 2.2K	1	
R56	ERJ6GEYG332	M.RESISTOR CH 1/10W 3.3K	1	
R57	ERJ6GEYG222	M.RESISTOR CH 1/10W 2.2K	1	
R58,59	ERJ6GEYG220	M.RESISTOR CH 1/10W 22	2	
R60,61	ERJ6GEYG152	M.RESISTOR CH 1/10W 1.5K	2	
R62,63	VRE0034E561	M.RESISTOR CH 1/10W 560	2	
R64	ERJ6GEYG150	M.RESISTOR CH 1/10W 15	1	
R65	VRE0034E301	M.RESISTOR CH 1/10W 300	1	
R66	ERJ6GEYG220	M.RESISTOR CH 1/10W 22	1	
R67	ERJ6GEYG222	M.RESISTOR CH 1/10W 2.2K	1	
R68	ERJ6GEYG102	M.RESISTOR CH 1/10W 1K	1	
R69	ERJ6GEYG471	M.RESISTOR CH 1/10W 470	1	
R70	ERJ6GEYG122	M.RESISTOR CH 1/10W 1.2K	1	
R71	ERJ6GEYG101	M.RESISTOR CH 1/10W 100	1	
R72	ERJ6GEYG472	M.RESISTOR CH 1/10W 4.7K	1	
R73	ERJ6GEYG183	M.RESISTOR CH 1/10W 18K	1	
R74	ERJ6GEYG102	M.RESISTOR CH 1/10W 1K	1	
R75	ERJ6GEYG101	M.RESISTOR CH 1/10W 100	1	
R76	ERJ6GEYG102	M.RESISTOR CH 1/10W 1K	1	
R77	ERJ6GEYG101	M.RESISTOR CH 1/10W 100	1	
R78	ERJ6GEYG122	M.RESISTOR CH 1/10W 1.2K	1	
R79	ERJ6GEYG471	M.RESISTOR CH 1/10W 470	1	
R80	ERJ6GEYG222	M.RESISTOR CH 1/10W 2.2K	1	
R81	ERJ6GEYG272	M.RESISTOR CH 1/10W 2.7K	1	
R82	ERJ6GEYG223	M.RESISTOR CH 1/10W 22K	1	
R83	ERJ6GEYG222	M.RESISTOR CH 1/10W 2.2K	1	
R84	ERJ6GEYG220	M.RESISTOR CH 1/10W 22	1	
R85	ERJ6GEYG562	M.RESISTOR CH 1/10W 5.6K	1	
R86,87	ERJ6GEYG332	M.RESISTOR CH 1/10W 3.3K	2	
R88	ERJ6GEYG823	M.RESISTOR CH 1/10W 82K	1	
R89	ERJ6GEYG332	M.RESISTOR CH 1/10W 3.3K	1	
R90	ERJ6GEYG222	M.RESISTOR CH 1/10W 2.2K	1	
R91	ERJ6GEYG563	M.RESISTOR CH 1/10W 56K	1	
R92	ERJ6GEYG333	M.RESISTOR CH 1/10W 33K	1	
R93	ERJ6GEYG332	M.RESISTOR CH 1/10W 3.3K	1	
R94	ERJ6GEYG273	M.RESISTOR CH 1/10W 27K	1	
R95	ERJ6GEYG272	M.RESISTOR CH 1/10W 2.7K	1	
R96	ERJ6GEYG472	M.RESISTOR CH 1/10W 4.7K	1	
R97	ERJ6GEYG224	M.RESISTOR CH 1/10W 220K	1	
R98	ERJ6GEYG272	M.RESISTOR CH 1/10W 2.7K	1	
R99	ERJ6GEYG221	M.RESISTOR CH 1/10W 220	1	
R100	ERJ6GEYG222	M.RESISTOR CH 1/10W 2.2K	1	
R101	ERJ6GEYG332	M.RESISTOR CH 1/10W 3.3K	1	
R102	ERJ6GEYG272	M.RESISTOR CH 1/10W 2.7K	1	
R103	VRE0034E223	M.RESISTOR CH 1/10W 22K	1	
R104	VRE0034E153	M.RESISTOR CH 1/10W 15K	1	
R105	ERJ6GEYG272	M.RESISTOR CH 1/10W 2.7K	1	
R109,10	ERJ6GEY0R00	M.RESISTOR CH 1/10W 0	2	
R133	ERJ6GEYG224	M.RESISTOR CH 1/10W 220K	1	
R135,36	ERJ6GEYG822	M.RESISTOR CH 1/10W 8.2K	2	
R137	ERJ6GEYG222	M.RESISTOR CH 1/10W 2.2K	1	
R138	ERJ6GEYG102	M.RESISTOR CH 1/10W 1K	1	
R139	ERJ6GEYG222	M.RESISTOR CH 1/10W 2.2K	1	
R140	ERJ6GEYG104	M.RESISTOR CH 1/10W 100K	1	
R141	ERJ6GEYG470	M.RESISTOR CH 1/10W 47	1	
R142	ERJ6GEYG681	M.RESISTOR CH 1/10W 680	1	
R143,44	ERJ6GEYG301	M.RESISTOR CH 1/10W 300	2	
R145	ERJ6GEYG223	M.RESISTOR CH 1/10W 22K	1	
R146	ERJ6GEYG105	M.RESISTOR CH 1/10W 1M	1	
R148,49	ERJ6GEYG103	M.RESISTOR CH 1/10W 10K	2	
R150	ERJ6GEYG104	M.RESISTOR CH 1/10W 100K	1	
R151	ERJ6GEYG102	M.RESISTOR CH 1/10W 1K	1	
R152	ERJ6GEYG222	M.RESISTOR CH 1/10W 2.2K	1	
R153	ERJ6GEYG333	M.RESISTOR CH 1/10W 33K	1	
R154	ERJ6GEYG104	M.RESISTOR CH 1/10W 100K	1	
R155	ERJ6GEYG332	M.RESISTOR CH 1/10W 3.3K	1	
R156	ERJ6GEYG472	M.RESISTOR CH 1/10W 4.7K	1	
R157	ERJ6GEYG103	M.RESISTOR CH 1/10W 10K	1	
R158	ERJ6GEYG221	M.RESISTOR CH 1/10W 220	1	
R159	ERJ6GEYG681	M.RESISTOR CH 1/10W 680	1	
R160,61	ERJ6GEYG301	M.RESISTOR CH 1/10W 300	2	
R162,63	ERJ6GEYG103	M.RESISTOR CH 1/10W 10K	2	

Ref.No.	Part No.	Part Name & Description	Pcs	Remarks
R164,65	ERJ6GEY0R00	M.RESISTOR CH 1/10W 0	2	
R166,67	ERJ6GEYG102	M.RESISTOR CH 1/10W 1K	2	
R168	ERJ6GEYG470	M.RESISTOR CH 1/10W 47	1	
R169,70	ERJ6GEYG272	M.RESISTOR CH 1/10W 2.7K	2	
R171	ERJ6GEYG102	M.RESISTOR CH 1/10W 1K	1	
R172	ERJ6GEYG272	M.RESISTOR CH 1/10W 2.7K	1	
R173	ERJ6GEYG470	M.RESISTOR CH 1/10W 47	1	
R174	ERJ6GEYJ471	M.RESISTOR CH 1/10W 470	1	
R175	ERJ6GEY0R00	M.RESISTOR CH 1/10W 0	1	
R176	ERDS2TJ101	C.RESISTOR 1/4W 100	1	
R179	ERDS2TJ681	C.RESISTOR 1/4W 680	1	
R200	ERJ6GEYG272	M.RESISTOR CH 1/10W 2.7K	1	
R201	ERJ6GEYG222	M.RESISTOR CH 1/10W 2.2K	1	
R202,03	VRE0034E331	M.RESISTOR CH 1/10W 330	2	
R204	ERJ6GEYG470	M.RESISTOR CH 1/10W 47	1	
R205	ERJ6GEYG272	M.RESISTOR CH 1/10W 2.7K	1	
R206,07	VRE0034E102	M.RESISTOR CH 1/10W 1K	2	
R209	VRE0034E621	M.RESISTOR CH 1/10W 620	1	
R210,11	ERJ6GEYG272	M.RESISTOR CH 1/10W 2.7K	2	
R212	ERJ6GEYG102	M.RESISTOR CH 1/10W 1K	1	
R213	ERJ6GEYG221	M.RESISTOR CH 1/10W 220	1	
R214	ERJ6GEYG681	M.RESISTOR CH 1/10W 680	1	
R215	ERJ6GEYG101	M.RESISTOR CH 1/10W 100	1	
R216	ERJ6GEYG102	M.RESISTOR CH 1/10W 1K	1	
R217	ERJ6GEYG101	M.RESISTOR CH 1/10W 100	1	
R218	ERJ6GEYG102	M.RESISTOR CH 1/10W 1K	1	
R219	ERJ6GEYG152	M.RESISTOR CH 1/10W 1.5K	1	
R220	ERJ6GEYG222	M.RESISTOR CH 1/10W 2.2K	1	
R221	ERJ6GEYG471	M.RESISTOR CH 1/10W 470	1	
R222,23	ERJ6GEYG222	M.RESISTOR CH 1/10W 2.2K	2	
R224	ERJ6GEYG101	M.RESISTOR CH 1/10W 100	1	
R225	ERJ6GEYG683	M.RESISTOR CH 1/10W 68K	1	
R226	ERJ6GEYG272	M.RESISTOR CH 1/10W 2.7K	1	
R227	ERJ6GEYG222	M.RESISTOR CH 1/10W 2.2K	1	
R228	ERJ6GEYG103	M.RESISTOR CH 1/10W 10K	1	
R229	ERJ6GEYG102	M.RESISTOR CH 1/10W 1K	1	
R230	ERJ6GEYG222	M.RESISTOR CH 1/10W 2.2K	1	
R231	ERJ6GEYG470	M.RESISTOR CH 1/10W 47	1	
R233	ERJ6GEYG102	M.RESISTOR CH 1/10W 1K	1	
R234	ERJ6GEYG681	M.RESISTOR CH 1/10W 680	1	
R235	ERJ6GEYG561	M.RESISTOR CH 1/10W 560	1	
R236	ERJ6GEYG121	M.RESISTOR CH 1/10W 120	1	
R237	ERJ6GEYG391	M.RESISTOR CH 1/10W 390	1	
R238	ERJ6GEYG223	M.RESISTOR CH 1/10W 22K	1	
R240	ERJ6GEYG182	M.RESISTOR CH 1/10W 1.8K	1	
R241	ERJ6GEYG273	M.RESISTOR CH 1/10W 27K	1	
R242	ERJ6GEYG470	M.RESISTOR CH 1/10W 47	1	
R243	ERJ6GEYG182	M.RESISTOR CH 1/10W 1.8K	1	
R244	VRE0034E151	M.RESISTOR CH 1/10W 150	1	
R245	ERJ6GEYG152	M.RESISTOR CH 1/10W 1.5K	1	
R246	ERJ6GEYG331	M.RESISTOR CH 1/10W 330	1	
R257	VRE0034E331	M.RESISTOR CH 1/10W 330	1	
R258-60	VRE0034E301	M.RESISTOR CH 1/10W 300	3	
R262,63	VRE0034E102	M.RESISTOR CH 1/10W 1K	2	
R264	VRE0034E821	M.RESISTOR CH 1/10W 820	1	
R265,66	VRE0034E102	M.RESISTOR CH 1/10W 1K	2	
R268	ERJ6GEY0R00	M.RESISTOR CH 1/10W 0	1	
R269	ERJ6GEYG272	M.RESISTOR CH 1/10W 2.7K	1	
R270	ERJ6GEYG471	M.RESISTOR CH 1/10W 470	1	
R271	ERJ6GEYG331	M.RESISTOR CH 1/10W 330	1	
R272	ERJ6GEYG152	M.RESISTOR CH 1/10W 1.5K	1	
R273	ERJ6GEYG102	M.RESISTOR CH 1/10W 1K	1	
R274	ERJ6GEYG101	M.RESISTOR CH 1/10W 100	1	
R275	ERJ6GEYG102	M.RESISTOR CH 1/10W 1K	1	
R276	ERJ6GEYG101	M.RESISTOR CH 1/10W 100	1	
R277	ERJ6GEYG152	M.RESISTOR CH 1/10W 1.5K	1	
R278	ERJ6GEYG471	M.RESISTOR CH 1/10W 470	1	
R279	ERJ6GEYG222	M.RESISTOR CH 1/10W 2.2K	1	
R280	ERJ6GEYG152	M.RESISTOR CH 1/10W 1.5K	1	
R281	ERJ6GEYG222	M.RESISTOR CH 1/10W 2.2K	1	
R282	ERJ6GEYG101	M.RESISTOR CH 1/10W 100	1	
R283	ERJ6GEYG272	M.RESISTOR CH 1/10W 2.7K	1	
R285,86	ERJ6GEYG103	M.RESISTOR CH 1/10W 10K	2	
R288	ERJ6GEYG102	M.RESISTOR CH 1/10W 1K	1	
R290	ERJ6GEYG470	M.RESISTOR CH 1/10W 47	1	

Ref.No.	Part No.	Part Name & Description	Pcs	Remarks
R291	ERJ6GEYG222	M.RESISTOR CH 1/10W 2.2K	1	
R292	ERJ6GEYG102	M.RESISTOR CH 1/10W 1K	1	
R293	ERJ6GEYG152	M.RESISTOR CH 1/10W 1.5K	1	
R294	ERJ6GEYG470	M.RESISTOR CH 1/10W 47	1	
R298	ERJ6GEYG470	M.RESISTOR CH 1/10W 47	1	
R299	ERJ6GEYG272	M.RESISTOR CH 1/10W 2.7K	1	
R300,01	VRE0034E102	M.RESISTOR CH 1/10W 1K	2	
R302	ERJ6GEY0R00	M.RESISTOR CH 1/10W 0	1	
R303	ERJ6GEYG272	M.RESISTOR CH 1/10W 2.7K	1	
R306	ERJ6GEYG683	M.RESISTOR CH 1/10W 68K	1	
R307	ERJ6GEYG821	M.RESISTOR CH 1/10W 820	1	
R308	ERJ6GEYG273	M.RESISTOR CH 1/10W 27K	1	
R309	ERJ6GEYG272	M.RESISTOR CH 1/10W 2.7K	1	
R310	ERJ6GEYG682	M.REISITOR CH 1/10W 6.8K	1	
R311	ERJ6GEYG272	M.RESISTOR CH 1/10W 2.7K	1	
R312	ERJ6GEYG222	M.RESISTOR CH 1/10W 2.2K	1	
R313	ERJ6GEYG101	M.RESISTOR CH 1/10W 100	1	
R314	ERJ6GEYG683	M.RESISTOR CH 1/10W 68K	1	
R316-18	VRE0034E301	M.RESISTOR CH 1/10W 300	3	
R320,21	VRE0034E102	M.RESISTOR CH 1/10W 1K	2	
R322	VRE0034E821	M.RESISTOR CH 1/10W 820	1	
R323,24	VRE0034E102	M.RESISTOR CH 1/10W 1K	2	
R326	ERJ6GEY0R00	M.RESISTOR CH 1/10W 0	1	
R327	ERJ6GEYG272	M.RESISTOR CH 1/10W 2.7K	1	
R328	ERJ6GEYG152	M.RESISTOR CH 1/10W 1.5K	1	
R329	ERJ6GEYG471	M.RESISTOR CH 1/10W 470	1	
R330	ERJ6GEYG331	M.RESISTOR CH 1/10W 330	1	
R331	ERJ6GEYG102	M.RESISTOR CH 1/10W 1K	1	
R332	ERJ6GEYG101	M.RESISTOR CH 1/10W 100	1	
R333	ERJ6GEYG102	M.RESISTOR CH 1/10W 1K	1	
R334	ERJ6GEYG101	M.RESISTOR CH 1/10W 100	1	
R335	ERJ6GEYG152	M.RESISTOR CH 1/10W 1.5K	1	
R336	ERJ6GEYG471	M.RESISTOR CH 1/10W 470	1	
R337	ERJ6GEYG222	M.RESISTOR CH 1/10W 2.2K	1	
R338,39	ERJ6GEYG152	M.RESISTOR CH 1/10W 1.5K	2	
R340	ERJ6GEYG101	M.RESISTOR CH 1/10W 100	1	
R341	ERJ6GEYG272	M.RESISTOR CH 1/10W 2.7K	1	
R342	ERJ6GEYG683	M.RESISTOR CH 1/10W 68K	1	
R344,45	ERJ6GEYG103	M.RESISTOR CH 1/10W 10K	2	
R346	ERJ6GEYG102	M.RESISTOR CH 1/10W 1K	1	
R347	ERJ6GEYG470	M.RESISTOR CH 1/10W 47	1	
R348	ERJ6GEYG222	M.RESISTOR CH 1/10W 2.2K	1	
R349	ERJ6GEYG470	M.RESISTOR CH 1/10W 47	1	
R350	ERJ6GEYG152	M.RESISTOR CH 1/10W 1.5K	1	
R351	ERJ6GEYG391	M.RESISTOR CH 1/10W 390	1	
R355	ERJ6GEYG470	M.RESISTOR CH 1/10W 47	1	
R356	ERJ6GEYG222	M.RESISTOR CH 1/10W 2.2K	1	
R357,58	VRE0034E102	M.RESISTOR CH 1/10W 1K	2	
R359	VRE0034E271	M.RESISTOR CH 1/10W 270	1	
R360	ERJ6GEYG272	M.RESISTOR CH 1/10W 2.7K	1	
R364	ERJ6GEYG391	M.RESISTOR CH 1/10W 390	1	
R365	ERJ6GEYG273	M.RESISTOR CH 1/10W 27K	1	
R366	ERJ6GEYG272	M.RESISTOR CH 1/10W 2.7K	1	
R367	ERJ6GEYG682	M.REISITOR CH 1/10W 6.8K	1	
R368	ERJ6GEYG272	M.RESISTOR CH 1/10W 2.7K	1	
R369	ERJ6GEYG222	M.RESISTOR CH 1/10W 2.2K	1	
R370	ERJ6GEYG101	M.RESISTOR CH 1/10W 100	1	
R371	ERJ6GEYG683	M.RESISTOR CH 1/10W 68K	1	
R372	ERJ6GEYG332	M.RESISTOR CH 1/10W 3.3K	1	
R373	ERJ6GEYG562	M.RESISTOR CH 1/10W 5.6K	1	
R374,75	ERJ6GEYG223	M.RESISTOR CH 1/10W 22K	2	
R376	ERJ6GEYG332	M.RESISTOR CH 1/10W 3.3K	1	
R396	ERJ6GEYG332	M.RESISTOR CH 1/10W 3.3K	1	
R397	ERJ6GEYG472	M.RESISTOR CH 1/10W 4.7K	1	
R398	ERJ6GEYG153	M.RESISTOR CH 1/10W 15K	1	
R399	ERJ6GEYG221	M.RESISTOR CH 1/10W 220	1	
R400	ERJ6GEYG472	M.RESISTOR CH 1/10W 4.7K	1	
R401,02	ERJ6GEYG102	M.RESISTOR CH 1/10W 1K	2	
R404	ERJ6GEYG102	M.RESISTOR CH 1/10W 1K	1	
R405,06	ERJ6GEYG221	M.RESISTOR CH 1/10W 220	2	
R409	VRE0034E391	M.RESISTOR CH 1/10W 390	1	
R410	ERJ6GEY0R00	M.RESISTOR CH 1/10W 0	1	
R411	ERJ6GEYG221	M.RESISTOR CH 1/10W 220	1	
R412	VRE0034E391	M.RESISTOR CH 1/10W 390	1	
R413-16	ERJ6GEYG223	M.RESISTOR CH 1/10W 22K	4	

Ref.No.	Part No.	Part Name & Description	Pcs	Remarks
R417	VRE0034E391	M.RESISTOR CH 1/10W 390	1	
R418	ERJ6GEYG151	M.RESISTOR CH 1/10W 150	1	
R421	ERJ6GEYG221	M.RESISTOR CH 1/10W 220	1	
R422	VRE0034E391	M.RESISTOR CH 1/10W 390	1	
R423	ERJ6GEY0R00	M.RESISTOR CH 1/10W 0	1	
R424	ERJ6GEYG101	M.RESISTOR CH 1/10W 100	1	
R425,26	ERJ6GEYG470	M.RESISTOR CH 1/10W 47	2	
R427	ERJ6GEYG221	M.RESISTOR CH 1/10W 220	1	
R428	VRE0034E391	M.RESISTOR CH 1/10W 390	1	
R429	ERJ6GEYG392	M.RESISTOR CH 1/10W 3.9K	1	
R430	ERJ6GEYG102	M.RESISTOR CH 1/10W 1K	1	
R431	VRE0034E821	M.RESISTOR CH 1/10W 820	1	
R432	ERJ6GEYG102	M.RESISTOR CH 1/10W 1K	1	
R433	ERJ6GEYG152	M.RESISTOR CH 1/10W 1.5K	1	
R434	ERJ6GEYG123	M.RESISTOR CH 1/10W 12K	1	
R435	ERJ6GEYG682	M.REISITOR CH 1/10W 6.8K	1	
R436	ERJ6GEYG822	M.RESISTOR CH 1/10W 8.2K	1	
R437	ERJ6GEYG123	M.RESISTOR CH 1/10W 12K	1	
R438	ERJ6GEYG152	M.RESISTOR CH 1/10W 1.5K	1	
R439	ERJ6GEYG102	M.RESISTOR CH 1/10W 1K	1	
R440	VRE0034E821	M.RESISTOR CH 1/10W 820	1	
R441	ERJ6GEYG102	M.RESISTOR CH 1/10W 1K	1	
R442	ERJ6GEYG222	M.RESISTOR CH 1/10W 2.2K	1	
R443	ERJ6GEY0R00	M.RESISTOR CH 1/10W 0	1	
R501	ERJ6GEYG102	M.RESISTOR CH 1/10W 1K	1	
R502	ERJ6GEYG330	M.RESISTOR CH 1/10W 33	1	
R503,04	ERJ6GEYG222	M.RESISTOR CH 1/10W 2.2K	2	
R505,06	ERJ6GEYG102	M.RESISTOR CH 1/10W 1K	2	
R507	ERJ6GEYG331	M.RESISTOR CH 1/10W 330	1	
R508	ERJ6GEYG221	M.RESISTOR CH 1/10W 220	1	
R509	ERJ6GEYG152	M.RESISTOR CH 1/10W 1.5K	1	
R510	ERJ6GEYG391	M.RESISTOR CH 1/10W 390	1	
R511	ERJ6GEYG102	M.RESISTOR CH 1/10W 1K	1	
R512	ERJ6GEYG152	M.RESISTOR CH 1/10W 1.5K	1	
R513	ERJ6GEYG683	M.RESISTOR CH 1/10W 68K	1	
R514	ERJ6GEYG182	M.RESISTOR CH 1/10W 1.8K	1	
R515	ERJ6GEYG101	M.RESISTOR CH 1/10W 100	1	
R516	ERJ6GEYG152	M.RESISTOR CH 1/10W 1.5K	1	
R517	ERJ6GEYG470	M.RESISTOR CH 1/10W 47	1	
R518	ERJ6GEYG273	M.RESISTOR CH 1/10W 27K	1	
R519	ERJ6GEYG331	M.RESISTOR CH 1/10W 330	1	
R520	ERJ6GEYG681	M.RESISTOR CH 1/10W 680	1	
R521	ERJ6GEYG391	M.RESISTOR CH 1/10W 390	1	
R522	ERJ6GEYG102	M.RESISTOR CH 1/10W 1K	1	
R523	ERJ6GEYG681	M.RESISTOR CH 1/10W 680	1	
R524	ERJ6GEYG561	M.RESISTOR CH 1/10W 560	1	
R525	ERJ6GEYG182	M.RESISTOR CH 1/10W 1.8K	1	
R526	ERJ6GEYG470	M.RESISTOR CH 1/10W 47	1	
R527	ERJ6GEYG182	M.RESISTOR CH 1/10W 1.8K	1	
R528	VRE0034E151	M.RESISTOR CH 1/10W 150	1	
R529	ERJ6GEYG152	M.RESISTOR CH 1/10W 1.5K	1	
R530	ERJ6GEYG470	M.RESISTOR CH 1/10W 47	1	
R542	ERJ6GEYG821	M.RESISTOR CH 1/10W 820	1	
R543	ERJ6GEYG392	M.RESISTOR CH 1/10W 3.9K	1	
R544	ERJ6GEYG561	M.RESISTOR CH 1/10W 560	1	
R545	ERJ6GEYG391	M.RESISTOR CH 1/10W 390	1	
R546	ERJ6GEYG561	M.RESISTOR CH 1/10W 560	1	
R547	ERJ6GEYG391	M.RESISTOR CH 1/10W 390	1	
R549	ERJ6GEYG273	M.RESISTOR CH 1/10W 27K	1	
R551	ERJ6GEYG391	M.RESISTOR CH 1/10W 390	1	
R552	ERJ6GEYG102	M.RESISTOR CH 1/10W 1K	1	
R553	ERJ6GEYG681	M.RESISTOR CH 1/10W 680	1	
R554	ERJ6GEYG561	M.RESISTOR CH 1/10W 560	1	
R555	ERJ6GEYG182	M.RESISTOR CH 1/10W 1.8K	1	
R556	ERJ6GEYG470	M.RESISTOR CH 1/10W 47	1	
R557	ERJ6GEYG182	M.RESISTOR CH 1/10W 1.8K	1	
R558	VRE0034E151	M.RESISTOR CH 1/10W 150	1	
R559	ERJ6GEYG152	M.RESISTOR CH 1/10W 1.5K	1	
R560	ERJ6GEYG470	M.RESISTOR CH 1/10W 47	1	
R564	ERJ6GEYG102	M.RESISTOR CH 1/10W 1K	1	
R565	ERJ6GEYG222	M.RESISTOR CH 1/10W 2.2K	1	
R566	ERJ6GEYG182	M.RESISTOR CH 1/10W 1.8K	1	
R567	ERJ6GEYG221	M.RESISTOR CH 1/10W 220	1	
R568	ERJ6GEYG470	M.RESISTOR CH 1/10W 47	1	
R569	ERJ6GEYG153	M.RESISTOR CH 1/10W 15K	1	

Ref.No.	Part No.	Part Name & Description	Pcs	Remarks
R570	ERJ6GEYG223	M.RESISTOR CH 1/10W 22K	1	
R571	ERJ6GEYG470	M.RESISTOR CH 1/10W 47	1	
R572	ERJ6GEYG472	M.RESISTOR CH 1/10W 4.7K	1	
R573,74	ERJ6GEYG102	M.RESISTOR CH 1/10W 1K	2	
R576	ERJ6GEYG103	M.RESISTOR CH 1/10W 10K	1	
R577	ERJ6GEYG102	M.RESISTOR CH 1/10W 1K	1	
R578	ERJ6GEYG472	M.RESISTOR CH 1/10W 4.7K	1	
R579,80	ERJ6GEYG121	M.RESISTOR CH 1/10W 120	2	
R581,82	ERJ6GEYG821	M.RESISTOR CH 1/10W 820	2	
R583	ERJ6GEYG470	M.RESISTOR CH 1/10W 47	1	
R584	ERJ6GEYG153	M.RESISTOR CH 1/10W 15K	1	
R585	ERJ6GEYG223	M.RESISTOR CH 1/10W 22K	1	
R586	ERJ6GEYG470	M.RESISTOR CH 1/10W 47	1	
R587	ERJ6GEYG472	M.RESISTOR CH 1/10W 4.7K	1	
R588	ERJ6GEYG102	M.RESISTOR CH 1/10W 1K	1	
R590	ERJ6GEYG103	M.RESISTOR CH 1/10W 10K	1	
R591	ERJ6GEYG102	M.RESISTOR CH 1/10W 1K	1	
R592	ERJ6GEYG472	M.RESISTOR CH 1/10W 4.7K	1	
R593,94	ERJ6GEYG121	M.RESISTOR CH 1/10W 120	2	
R595,96	ERJ6GEYG821	M.RESISTOR CH 1/10W 820	2	
R597	ERJ6GEYG102	M.RESISTOR CH 1/10W 1K	1	
R598	ERJ6GEYG103	M.RESISTOR CH 1/10W 10K	1	
R599	ERJ6GEYG822	M.RESISTOR CH 1/10W 8.2K	1	
R600	ERJ6GEYG102	M.RESISTOR CH 1/10W 1K	1	
R601,02	VRE0034E301	M.RESISTOR CH 1/10W 300	2	
R603	ERJ6GEYG152	M.RESISTOR CH 1/10W 1.5K	1	
R604	ERJ6GEYG151	M.RESISTOR CH 1/10W 150	1	
R605	ERJ6GEYG102	M.RESISTOR CH 1/10W 1K	1	
R606	ERJ6GEYG182	M.RESISTOR CH 1/10W 1.8K	1	
R607	ERJ6GEYG332	M.RESISTOR CH 1/10W 3.3K	1	
R608	ERJ6GEYG470	M.RESISTOR CH 1/10W 47	1	
R609,10	ERJ6GEYG122	M.RESISTOR CH 1/10W 1.2K	2	
R611	ERJ6GEY0R00	M.RESISTOR CH 1/10W 0	1	
R612	ERJ6GEYG272	M.RESISTOR CH 1/10W 2.7K	1	
R613	ERJ6GEYG182	M.RESISTOR CH 1/10W 1.8K	1	
R614	ERJ6GEYG392	M.RESISTOR CH 1/10W 3.9K	1	
R615	ERJ6GEYG151	M.RESISTOR CH 1/10W 150	1	
R616	ERJ6GEYG222	M.RESISTOR CH 1/10W 2.2K	1	
R617	ERJ6GEYG330	M.RESISTOR CH 1/10W 33	1	
R618	ERJ6GEYG222	M.RESISTOR CH 1/10W 2.2K	1	
R619	ERJ6GEYG102	M.RESISTOR CH 1/10W 1K	1	
R620	ERJ6GEYG181	M.RESISTOR CH 1/10W 180	1	
R621	ERJ6GEYG821	M.RESISTOR CH 1/10W 820	1	
R622	ERJ6GEYG152	M.RESISTOR CH 1/10W 1.5K	1	
R623	ERJ6GEYG470	M.RESISTOR CH 1/10W 47	1	
R630	ERJ6GEYG272	M.RESISTOR CH 1/10W 2.7K	1	
R633	ERJ6GEY0R00	M.RESISTOR CH 1/10W 0	1	
R634	ERJ6GEYG683	M.RESISTOR CH 1/10W 68K	1	
R635	ERJ6GEYG104	M.RESISTOR CH 1/10W 100K	1	
R636	ERJ6GEYG562	M.RESISTOR CH 1/10W 5.6K	1	
R637	ERJ6GEYG183	M.RESISTOR CH 1/10W 18K	1	
R642	ERJ6GEYG332	M.RESISTOR CH 1/10W 3.3K	1	
R643	ERJ6GEYG822	M.RESISTOR CH 1/10W 8.2K	1	
R644	ERJ6GEYG133	M.RESISTOR CH 1/10W 13K	1	
R645	ERJ6GEYG182	M.RESISTOR CH 1/10W 1.8K	1	
R646	ERJ6GEYG681	M.RESISTOR CH 1/10W 680	1	
R647	ERJ6GEYG471	M.RESISTOR CH 1/10W 470	1	
R648,49	ERJ6GEYG473	M.RESISTOR CH 1/10W 47K	2	
R650	ERJ6GEYG221	M.RESISTOR CH 1/10W 220	1	
R651	ERJ6GEYG682	M.REISITOR CH 1/10W 6.8K	1	
R652	ERJ6GEYG182	M.RESISTOR CH 1/10W 1.8K	1	
R653	ERJ6GEYG122	M.RESISTOR CH 1/10W 1.2K	1	
R654,55	ERJ6GEYG101	M.RESISTOR CH 1/10W 100	2	
R656	ERJ6GEYG122	M.RESISTOR CH 1/10W 1.2K	1	
R657	ERJ6GEYG182	M.RESISTOR CH 1/10W 1.8K	1	
R658	ERJ6GEYG102	M.RESISTOR CH 1/10W 1K	1	
R659	ERJ6GEYG681	M.RESISTOR CH 1/10W 680	1	
R660	ERJ6GEYG102	M.RESISTOR CH 1/10W 1K	1	
R661	ERJ6GEYG222	M.RESISTOR CH 1/10W 2.2K	1	
R662	ERJ6GEYG182	M.RESISTOR CH 1/10W 1.8K	1	
R663	ERJ6GEYG222	M.RESISTOR CH 1/10W 2.2K	1	
R664	ERJ6GEYG682	M.REISITOR CH 1/10W 6.8K	1	
R665	ERJ6GEYG122	M.RESISTOR CH 1/10W 1.2K	1	
R666	ERJ6GEYG102	M.RESISTOR CH 1/10W 1K	1	
R667	ERJ6GEYG182	M.RESISTOR CH 1/10W 1.8K	1	

Ref.No.	Part No.	Part Name & Description	Pcs	Remarks
R668	ERJ6GEYG102	M.RESISTOR CH 1/10W 1K	1	
R669	ERJ6GEYG681	M.RESISTOR CH 1/10W 680	1	
R670	ERJ6GEYG331	M.RESISTOR CH 1/10W 330	1	
R671	ERJ6GEYG152	M.RESISTOR CH 1/10W 1.5K	1	
R672,73	ERJ6GEYG102	M.RESISTOR CH 1/10W 1K	2	
R674	ERJ6GEYG561	M.RESISTOR CH 1/10W 560	1	
R675	ERJ6GEY0R00	M.RESISTOR CH 1/10W 0	1	
R676	ERJ6GEYG152	M.RESISTOR CH 1/10W 1.5K	1	
R677	ERJ6GEYG102	M.RESISTOR CH 1/10W 1K	1	
R678	ERJ6GEYG152	M.RESISTOR CH 1/10W 1.5K	1	
R679	ERJ6GEYG102	M.RESISTOR CH 1/10W 1K	1	
R680	ERJ6GEYG561	M.RESISTOR CH 1/10W 560	1	
R681	ERJ6GEYG330	M.RESISTOR CH 1/10W 33	1	
R682	ERJ6GEYG681	M.RESISTOR CH 1/10W 680	1	
R683	ERJ6GEYG124	M.RESISTOR CH 1/10W 120K	1	
R684	ERJ6GEYG152	M.RESISTOR CH 1/10W 1.5K	1	
R685	ERJ6GEYG102	M.RESISTOR CH 1/10W 1K	1	
R686	ERJ6GEYG181	M.RESISTOR CH 1/10W 180	1	
R687	ERJ6GEYG102	M.RESISTOR CH 1/10W 1K	1	
R688	ERJ6GEYG561	M.RESISTOR CH 1/10W 560	1	
R689	ERJ6GEYG152	M.RESISTOR CH 1/10W 1.5K	1	
R690,91	ERJ6GEYG122	M.RESISTOR CH 1/10W 1.2K	2	
R692,93	ERJ6GEYG470	M.RESISTOR CH 1/10W 47	2	
R694,95	ERJ6GEYG102	M.RESISTOR CH 1/10W 1K	2	
R696,97	ERJ6GEYG122	M.RESISTOR CH 1/10W 1.2K	2	
R698,99	ERJ6GEYG470	M.RESISTOR CH 1/10W 47	2	
R700,01	ERJ6GEYG102	M.RESISTOR CH 1/10W 1K	2	
R702	ERJ6GEYG103	M.RESISTOR CH 1/10W 10K	1	
R703	ERJ6GEYG472	M.RESISTOR CH 1/10W 4.7K	1	
R704-07	ERJ6GEYG102	M.RESISTOR CH 1/10W 1K	4	
R709	ERJ6GEY0R00	M.RESISTOR CH 1/10W 0	1	
R711	ERJ6GEY0R00	M.RESISTOR CH 1/10W 0	1	
R714,15	ERJ6GEY0R00	M.RESISTOR CH 1/10W 0	2	
R716	ERJ6GEYG101	M.RESISTOR CH 1/10W 100	1	
R717	ERJ6GEYG122	M.RESISTOR CH 1/10W 1.2K	1	
R718	ERJ6GEYG154	M.RESISTOR CH 1/10W 150K	1	
R719	ERJ6GEYG102	M.RESISTOR CH 1/10W 1K	1	
R720	ERJ6GEYG681	M.RESISTOR CH 1/10W 680	1	
R721	ERJ6GEYG470	M.RESISTOR CH 1/10W 47	1	
R722	ERJ6GEYG182	M.RESISTOR CH 1/10W 1.8K	1	
R723	VRE0034E151	M.RESISTOR CH 1/10W 150	1	
R724	ERJ6GEYG152	M.RESISTOR CH 1/10W 1.5K	1	
R725	ERJ6GEYG470	M.RESISTOR CH 1/10W 47	1	
R726	ERJ6GEYG472	M.RESISTOR CH 1/10W 4.7K	1	
R727	ERJ6GEYG103	M.RESISTOR CH 1/10W 10K	1	
R728	ERJ6GEYG561	M.RESISTOR CH 1/10W 560	1	
R729	ERJ6GEYG391	M.RESISTOR CH 1/10W 390	1	
R730	ERJ6GEYG561	M.RESISTOR CH 1/10W 560	1	
R731	ERJ6GEYG391	M.RESISTOR CH 1/10W 390	1	
R732	ERJ6GEYG561	M.RESISTOR CH 1/10W 560	1	
R733	ERJ6GEYG391	M.RESISTOR CH 1/10W 390	1	
R734	ERJ6GEYG561	M.RESISTOR CH 1/10W 560	1	
R735	ERJ6GEYG391	M.RESISTOR CH 1/10W 390	1	
R736	ERJ6GEYG101	M.RESISTOR CH 1/10W 100	1	
R737	ERJ6GEYG122	M.RESISTOR CH 1/10W 1.2K	1	
R739,40	ERJ6GEYG152	M.RESISTOR CH 1/10W 1.5K	2	
R741	ERJ6GEYG105	M.RESISTOR CH 1/10W 1M	1	
R742	ERJ6GEYG122	M.RESISTOR CH 1/10W 1.2K	1	
R743	ERJ6GEYG472	M.RESISTOR CH 1/10W 4.7K	1	
R744	ERJ6GEY0R00	M.RESISTOR CH 1/10W 0	1	
R800	ERJ6GEYG223	M.RESISTOR CH 1/10W 22K	1	
R801	ERJ6GEYG562	M.RESISTOR CH 1/10W 5.6K	1	
R802	ERJ6GEYG331	M.RESISTOR CH 1/10W 330	1	
R803	ERJ6GEYG103	M.RESISTOR CH 1/10W 10K	1	
R804	ERJ6GEYG183	M.RESISTOR CH 1/10W 18K	1	
R805	ERJ6GEYG102	M.RESISTOR CH 1/10W 1K	1	
R806	ERJ6GEYG472	M.RESISTOR CH 1/10W 4.7K	1	
R807	ERJ6GEYG152	M.RESISTOR CH 1/10W 1.5K	1	
R808-10	ERJ6GEYG122	M.RESISTOR CH 1/10W 1.2K	3	
R811	ERJ6GEYG222	M.RESISTOR CH 1/10W 2.2K	1	
R812-14	ERJ6GEYG122	M.RESISTOR CH 1/10W 1.2K	3	
R815	ERJ6GEYG222	M.RESISTOR CH 1/10W 2.2K	1	
R816	ERJ6GEYG122	M.RESISTOR CH 1/10W 1.2K	1	
R817	ERJ6GEYG392	M.RESISTOR CH 1/10W 3.9K	1	
R819,20	ERJ6GEYG103	M.RESISTOR CH 1/10W 10K	2	

Ref.No.	Part No.	Part Name & Description	Pcs	Remarks
R821	ERJ6GEYG392	M.RESISTOR CH 1/10W 3.9K	1	
R822,23	ERJ6GEYG103	M.RESISTOR CH 1/10W 10K	2	
R826	ERJ6GEYG153	M.RESISTOR CH 1/10W 15K	1	
R827	ERJ6GEYG392	M.RESISTOR CH 1/10W 3.9K	1	
R828	ERJ6GEYG562	M.RESISTOR CH 1/10W 5.6K	1	
R829	ERJ6GEYG103	M.RESISTOR CH 1/10W 10K	1	
R830	ERJ6GEYG122	M.RESISTOR CH 1/10W 1.2K	1	
R831	ERJ6GEYG222	M.RESISTOR CH 1/10W 2.2K	1	
R832	ERJ6GEYG392	M.RESISTOR CH 1/10W 3.9K	1	
R833	ERJ6GEYG122	M.RESISTOR CH 1/10W 1.2K	1	
R834	ERJ6GEYG182	M.RESISTOR CH 1/10W 1.8K	1	
R835	ERJ6GEYG392	M.RESISTOR CH 1/10W 3.9K	1	
R836	ERJ6GEYG682	M.REISITOR CH 1/10W 6.8K	1	
R837	ERJ6GEYG392	M.RESISTOR CH 1/10W 3.9K	1	
R838	ERJ6GEYG682	M.REISITOR CH 1/10W 6.8K	1	
R839,40	ERJ6GEYG392	M.RESISTOR CH 1/10W 3.9K	2	
R841	ERJ6GEYG682	M.REISITOR CH 1/10W 6.8K	1	
R842	ERJ6GEYG392	M.RESISTOR CH 1/10W 3.9K	1	
R843	ERJ6GEYG682	M.REISITOR CH 1/10W 6.8K	1	
R844-46	ERJ6GEYG392	M.RESISTOR CH 1/10W 3.9K	3	
R847	ERJ6GEY0R00	M.RESISTOR CH 1/10W 0	1	
R848	ERJ6GEYG102	M.RESISTOR CH 1/10W 1K	1	
R849	ERJ6GEY0R00	M.RESISTOR CH 1/10W 0	1	
R850	ERJ6GEYG102	M.RESISTOR CH 1/10W 1K	1	
R851	ERJ6GEY0R00	M.RESISTOR CH 1/10W 0	1	
R852	ERJ6GEYG102	M.RESISTOR CH 1/10W 1K	1	
R853	ERJ6GEY0R00	M.RESISTOR CH 1/10W 0	1	
R854	ERJ6GEYG102	M.RESISTOR CH 1/10W 1K	1	
R855	ERJ6GEY0R00	M.RESISTOR CH 1/10W 0	1	
R856	ERJ6GEYG102	M.RESISTOR CH 1/10W 1K	1	
R857	ERJ6GEY0R00	M.RESISTOR CH 1/10W 0	1	
R858	ERJ6GEYG102	M.RESISTOR CH 1/10W 1K	1	
R859-62	ERJ6GEY0R00	M.RESISTOR CH 1/10W 0	4	
R867	ERJ6GEYG104	M.RESISTOR CH 1/10W 100K	1	
R868	ERJ6GEYG562	M.RESISTOR CH 1/10W 5.6K	1	
R869	ERJ6GEYG273	M.RESISTOR CH 1/10W 27K	1	
R870	ERJ6GEYG472	M.RESISTOR CH 1/10W 4.7K	1	
R871	ERJ6GEYG562	M.RESISTOR CH 1/10W 5.6K	1	
R872	ERJ6GEYG273	M.RESISTOR CH 1/10W 27K	1	
R873	ERJ6GEY0R00	M.RESISTOR CH 1/10W 0	1	
R876	ERJ6GEY0R00	M.RESISTOR CH 1/10W 0	1	
R878	ERJ6GEY0R00	M.RESISTOR CH 1/10W 0	1	
R880	ERJ6GEY0R00	M.RESISTOR CH 1/10W 0	1	
R882	ERJ6GEY0R00	M.RESISTOR CH 1/10W 0	1	
R883,84	ERJ6GEYG103	M.RESISTOR CH 1/10W 10K	2	
R886,87	ERJ6GEY0R00	M.RESISTOR CH 1/10W 0	2	
R889,90	ERJ6GEYG392	M.RESISTOR CH 1/10W 3.9K	2	
R891	ERJ6GEYG563	M.RESISTOR CH 1/10W 56K	1	
R892	ERJ6GEYG472	M.RESISTOR CH 1/10W 4.7K	1	
R893	ERJ6GEYG272	M.RESISTOR CH 1/10W 2.7K	1	
R894	ERJ6GEYG102	M.RESISTOR CH 1/10W 1K	1	
R895	ERJ6GEYG103	M.RESISTOR CH 1/10W 10K	1	
R896	ERJ6GEYG122	M.RESISTOR CH 1/10W 1.2K	1	
R897	ERJ6GEYG222	M.RESISTOR CH 1/10W 2.2K	1	
R898,99	ERJ6GEYG273	M.RESISTOR CH 1/10W 27K	2	
R900	ERJ6GEYG332	M.RESISTOR CH 1/10W 3.3K	1	
R901-05	ERJ6GEYG103	M.RESISTOR CH 1/10W 10K	5	
R906	ERJ6GEYG224	M.RESISTOR CH 1/10W 220K	1	
R907-09	ERJ6GEYG103	M.RESISTOR CH 1/10W 10K	3	
R910	ERJ6GEYG152	M.RESISTOR CH 1/10W 1.5K	1	
R911	ERJ6GEYG392	M.RESISTOR CH 1/10W 3.9K	1	
R912-16	ERJ6GEYG103	M.RESISTOR CH 1/10W 10K	5	
R917	ERJ6GEYG562	M.RESISTOR CH 1/10W 5.6K	1	
R925,26	ERJ6GEYG122	M.RESISTOR CH 1/10W 1.2K	2	
R928	ERJ6GEYG562	M.RESISTOR CH 1/10W 5.6K	1	
R929,30	ERJ6GEYG392	M.RESISTOR CH 1/10W 3.9K	2	
R1001	ERJ6GEYG681	M.RESISTOR CH 1/10W 680	1	
R1002	ERJ6GEYG621	M.RESISTOR CH 1/10W 620	1	
SW201	VSS0207	SWITCH	1	
SW202,03	VJP1990	CONNECTOR	2	
SW800	VSS0126	SWITCH	1	
SW801	VJP1990	CONNECTOR	1	

Ref.No.	Part No.	Part Name & Description	Pcs	Remarks
SWS801	VJS1990	CONNECTOR	1	
TH501-04	ERTD2FGL102S	THERMISTOR 1K	4	
TP1-P4	VJR0646	TEST POINT	4	
TP6,P7	VJR0646	TEST POINT	2	
TP201-04	VJR0646	TEST POINT	4	
TP206	VJR0646	TEST POINT	1	
TP501-03	VJR0646	TEST POINT	3	
TP505-07	VJR0646	TEST POINT	3	
TP800-03	VJR0646	TEST POINT	4	
TP805	VJR0646	TEST POINT	1	
TPG1,G2	VJR0646	TEST POINT	2	
TPG201	VJR0646	TEST POINT	1	
TPG501	VJR0646	TEST POINT	1	
VC201	ECV1ZW20X60	V.CAPACITOR 20P	1	
VC501	ECV1ZW30X53	V.CAPACITOR 30P	1	
VR1	VRV0109B201	V.RESISTOR 200	1	
VR2	VRV0109B502	V.RESISTOR 5K	1	
VR3	VRV0109B501	V.RESISTOR 500	1	
VR4	VRV0109B502	V.RESISTOR 5K	1	
VR200	VRV0064B501	V.RESISTOR 500	1	
VR201	VRV0064B503	V.RESISTOR 50K	1	
VR202	VRV0064B103	V.RESISTOR 10K	1	
VR203	VRV0109B501	V.RESISTOR 500	1	
VR204	VRV0109B503	V.RESISTOR 50K	1	
VR205	VRV0109B501	V.RESISTOR 500	1	
VR206	VRV0109B503	V.RESISTOR 50K	1	
VR207	VRV0109B102	V.RESISTOR 1K	1	
VR208,09	VRV0109B501	V.RESISTOR 500	2	
VR210-13	VRV0109B102	V.RESISTOR 1K	4	
VR501	VRV0109B501	V.RESISTOR 500	1	
VR502	VRV0109B503	V.RESISTOR 50K	1	
VR503-06	VRV0064B503	V.RESISTOR 50K	4	
VR507	VRV0109B201	V.RESISTOR 200	1	
VR508	VRV0109B101	V.RESISTOR 100	1	
VR509	VRV0109B201	V.RESISTOR 200	1	
VR510	VRV0109B203	V.RESISTOR 20K	1	
VR511	VRV0109B502	V.RESISTOR 5K	1	
VR512	VRV0064B503	V.RESISTOR 50K	1	
VR513,14	VRV0109B102	V.RESISTOR 1K	2	
VR515,16	VRV0109B501	V.RESISTOR 500	2	
VR517	VRV0064B503	V.RESISTOR 50K	1	
VR800,01	VRV0109B202	V.RESISTOR 2K	1	
VR802,03	VRV0109B203	V.RESISTOR 20K	2	
		MISCELLANEOUS		
	VML2143	CARD PULLER	1	
	VML2144	CARD PULLER	1	
	VMZ1547	BARRIER	1	
	VXA3966	P.C.B. SHIELD	1	
	XNG26E	NUT	4	
	XYNV3+K6FR	SCREW	5	
	XYN26+C12	SCREW	4	

Ref.No.		Part No.	Part Name & Description	Pcs	Remarks
	■	VEP88063N	P.C.BOARD W/COMPONENT		FOR AU-63H
			W2 ENCODER		
	■	VEP80632A	P.C.BOARD W/COMPONENT		ON VEP88063N
			W2 SUB		
			CAPACITORS		
C1		ECUM1H103KBN	C.CAPACITOR CH 50V 0.01U	1	
C2		ECEA1CU221	E.CAPACITOR 16V 220U	1	
C3		ECUM1H103KBN	C.CAPACITOR CH 50V 0.01U	1	
C4		ECEA0JU101	E.CAPACITOR 6.3V 100U	1	
C5		ECUM1H103KBN	C.CAPACITOR CH 50V 0.01U	1	
C6		ECEA1CU221	E.CAPACITOR 16V 220U	1	
C7-C9		ECUM1H103KBN	C.CAPACITOR CH 50V 0.01U	3	
C10		ECUM1H103KBN	C.CAPACITOR CH 50V 0.01U	1	
C11		ECEA1AU101	E.CAPACITOR 10V 100U	1	
C12,13		ECUM1H103KBN	C.CAPACITOR CH 50V 0.01U	2	
C14		ECEA1AU101	E.CAPACITOR 10V 100U	1	
C15		ECUM1H470JCN	C.CAPACITOR CH 50V 47P	1	
C16		ECUM1H103KBN	C.CAPACITOR CH 50V 0.01U	1	
C17		ECUM1H120JCN	C.CAPACITOR CH 50V 12P	1	
C18		ECUM1H103KBN	C.CAPACITOR CH 50V 0.01U	1	
C19,20		ECEA1CU221	E.CAPACITOR 16V 220U	2	
C21,22		ECUM1H103KBN	C.CAPACITOR CH 50V 0.01U	2	
C23		ECUM1H470JCN	C.CAPACITOR CH 50V 47P	1	
C24,25		ECUM1H151JCN	C.CAPACITOR CH 50V 150P	2	
C26		ECUM1E104ZFN	C.CAPACITOR CH 25V 0.1U	1	
C27		ECUM1H270JCN	C.CAPACITOR CH 50V 27P	1	
C28		ECQM1H183JF	P.CAPACITOR 50V 0.018U	1	
C29		ECUM1H103KBN	C.CAPACITOR CH 50V 0.01U	1	
C30		ECEA1EN4R7S	E.CAPACITOR 25V 4.7U	1	
C31		ECEA1HN2R2S	E.CAPACITOR 50V 2.2U	1	
C32		ECUM1H103KBN	C.CAPACITOR CH 50V 0.01U	1	
C33		ECEA0JU101	E.CAPACITOR 6.3V 100U	1	
C35		ECEA0JU221	E.CAPACITOR 6.3V 220U	1	
C36		ECUM1H103KBN	C.CAPACITOR CH 50V 0.01U	1	
C37		ECEA0JU221	E.CAPACITOR 6.3V 220U	1	
C38-46		ECUM1H103KBN	C.CAPACITOR CH 50V 0.01U	9	
C49,50		ECUM1H103KBN	C.CAPACITOR CH 50V 0.01U	2	
C51		ECEA1AU101	E.CAPACITOR 10V 100U	1	
C52		ECUM1E104ZFN	C.CAPACITOR CH 25V 0.1U	1	
C53		ECUM1H103KBN	C.CAPACITOR CH 50V 0.01U	1	
C54		ECEA1AU101	E.CAPACITOR 10V 100U	1	
C55		ECUM1H220JCN	C.CAPACITOR CH 50V 22P	1	
C56		ECUM1H103KBN	C.CAPACITOR CH 50V 0.01U	1	
C57		ECUM1H150JCN	C.CAPACITOR CH 50V 15P	1	
C58		ECUM1H103KBN	C.CAPACITOR CH 50V 0.01U	1	
C59		ECEA0JU101	E.CAPACITOR 6.3V 100U	1	
C60		ECUM1H120JCN	C.CAPACITOR CH 50V 12P	1	
C61		ECEA0JU221	E.CAPACITOR 6.3V 220U	1	
C62		ECUM1H103KBN	C.CAPACITOR CH 50V 0.01U	1	
C63		ECEA0JU221	E.CAPACITOR 6.3V 220U	1	
C64-73		ECUM1H103KBN	C.CAPACITOR CH 50V 0.01U	10	
C76		ECUM1H270JCN	C.CAPACITOR CH 50V 27P	1	
C77		ECUM1E104ZFN	C.CAPACITOR CH 25V 0.1U	1	
C78		ECQM1H223JF	P.CAPACITOR 50V 0.022U	1	
C79		ECUM1H103KBN	C.CAPACITOR CH 50V 0.01U	1	
C80,81		ECEA1HN2R2S	E.CAPACITOR 50V 2.2U	2	
C82,83		ECUM1E104ZFN	C.CAPACITOR CH 25V 0.1U	2	
C84		ECEA0JU470	E.CAPACITOR 6.3V 47U	1	
C85,86		ECUM1E104ZFN	C.CAPACITOR CH 25V 0.1U	2	
C87		ECUM1H103KBN	C.CAPACITOR CH 50V 0.01U	1	
C88		ECUM1E104ZFN	C.CAPACITOR CH 25V 0.1U	1	
C89		ECKF1H103ZF	C.CAPACITOR 50V 0.01U	1	
C113		ECUM1E104ZFN	C.CAPACITOR CH 25V 0.1U	1	
C114-17		ECUM1H103KBN	C.CAPACITOR CH 50V 0.01U	4	
C120		ECUM1H103KBN	C.CAPACITOR CH 50V 0.01U	1	
C121		ECEA1AU470	E.CAPACITOR 10V 47U	1	
C122		ECUM1H103KBN	C.CAPACITOR CH 50V 0.01U	1	
C123		ECUM1C104KBN	C.CAPACITOR CH 16V 0.1U	1	
C124		ECUM1H181JCN	C.CAPACITOR CH 50V 180P	1	

Ref.No.		Part No.	Part Name & Description	Pcs	Remarks
C125		ECUM1E104ZFN	C.CAPACITOR CH 25V 0.1U	1	
C126		ECUM1C104KBN	C.CAPACITOR CH 16V 0.1U	1	
C127		ECUM1H180JCN	C.CAPACITOR CH 50V 18P	1	
C128		ECUM1H680JCN	C.CAPACITOR CH 50V 68P	1	
C129,30		ECUM1C104KBN	C.CAPACITOR CH 16V 0.1U	2	
C131		ECEA1HN010S	E.CAPACITOR 50V 1U	1	
C132		ECUM1H103KBN	C.CAPACITOR CH 50V 0.01U	1	
C133		ECEA1AU470	E.CAPACITOR 10V 47U	1	
C134		ECUM1E104ZFN	C.CAPACITOR CH 25V 0.1U	1	
C135		ECUM1H391JCN	C.CAPACITOR CH 50V 390P	1	
C136		ECUM1H151JCN	C.CAPACITOR CH 50V 150P	1	
C137		ECUM1H121JCN	C.CAPACITOR CH 50V 120P	1	
C138		ECUM1H391JCN	C.CAPACITOR CH 50V 390P	1	
C139-41		ECUM1H103KBN	C.CAPACITOR CH 50V 0.01U	3	
C142		ECEA1AU470	E.CAPACITOR 10V 47U	1	
C143,44		ECUM1C104KBN	C.CAPACITOR CH 16V 0.1U	2	
C145		ECUM1H121JCN	C.CAPACITOR CH 50V 120P	1	
C146		ECUM1E104ZFN	C.CAPACITOR CH 25V 0.1U	1	
C147-49		ECUM1C104KBN	C.CAPACITOR CH 16V 0.1U	3	
C150		ECEA1HN010S	E.CAPACITOR 50V 1U	1	
C151		ECUM1H103KBN	C.CAPACITOR CH 50V 0.01U	1	
C152		ECEA1AU470	E.CAPACITOR 10V 47U	1	
C154		ECUM1E104ZFN	C.CAPACITOR CH 25V 0.1U	1	
C155		ECUM1H391JCN	C.CAPACITOR CH 50V 390P	1	
C156		ECUM1H151JCN	C.CAPACITOR CH 50V 150P	1	
C157		ECUM1H121JCN	C.CAPACITOR CH 50V 120P	1	
C158		ECUM1H391JCN	C.CAPACITOR CH 50V 390P	1	
C159,60		ECUM1H821JCN	C.CAPACITOR CH 50V 820P	2	
C161,62		ECEA1AN470S	E.CAPACITOR 10V 47U	2	
C163		ECEA1CU470	E.CAPACITOR 16V 47U	1	
C164		ECQM1H104JF	P.CAPACITOR 50V 0.1U	1	
C165		ECEA1AN470S	E.CAPACITOR 10V 47U	1	
C166		ECUM1H221JCN	C.CAPACITOR CH 50V 220P	1	
C200		ECUM1H103KBN	C.CAPACITOR CH 50V 0.01U	1	
C201		ECEA1AU101	E.CAPACITOR 10V 100U	1	
C202,03		ECUM1H103KBN	C.CAPACITOR CH 50V 0.01U	2	
C204		ECEA1AU101	E.CAPACITOR 10V 100U	1	
C205		ECUM1H103KBN	C.CAPACITOR CH 50V 0.01U	1	
C206		ECUM1H150JCN	C.CAPACITOR CH 50V 15P	1	
C207		ECUM1H470JCN	C.CAPACITOR CH 50V 47P	1	
C209		ECUM1H220JCN	C.CAPACITOR CH 50V 22P	1	
C210		ECUM1H100DCN	C.CAPACITOR CH 50V 10P	1	
C211		ECUM1C104KBN	C.CAPACITOR CH 16V 0.1U	1	
C212		ECUM1E104ZFN	C.CAPACITOR CH 25V 0.1U	1	
C213		ECUM1H221JCN	C.CAPACITOR CH 50V 220P	1	
C214		ECUM1H270JCN	C.CAPACITOR CH 50V 27P	1	
C215		ECUM1H103KBN	C.CAPACITOR CH 50V 0.01U	1	
C219		ECUM1H560JCN	C.CAPACITOR CH 50V 56P	1	
C220		ECUM1E104ZFN	C.CAPACITOR CH 25V 0.1U	1	
C223		ECUM1H221JCN	C.CAPACITOR CH 50V 220P	1	
C224		ECUM1H030DCN	C.CAPACITOR CH 50V 3P	1	
C226		ECEA1HNR47S	E.CAPACITOR 50V 0.47U	1	
C227,28		ECUM1H103KBN	C.CAPACITOR CH 50V 0.01U	2	
C229		ECEA1AU101	E.CAPACITOR 10V 100U	1	
C230,31		ECUM1H103KBN	C.CAPACITOR CH 50V 0.01U	2	
C232		ECEA1AU101	E.CAPACITOR 10V 100U	1	
C233		ECUM1H103KBN	C.CAPACITOR CH 50V 0.01U	1	
C235		ECUM1H120JCN	C.CAPACITOR CH 50V 12P	1	
C236		ECUM1H560JCN	C.CAPACITOR CH 50V 56P	1	
C238		ECUM1H100DCN	C.CAPACITOR CH 50V 10P	1	
C239		ECUM1H680JCN	C.CAPACITOR CH 50V 68P	1	
C240		ECUM1H330JCN	C.CAPACITOR CH 50V 33P	1	
C241		ECUM1H100DCN	C.CAPACITOR CH 50V 10P	1	
C242		ECEA1HNR47S	E.CAPACITOR 50V 0.47U	1	
C243		ECUM1C104KBN	C.CAPACITOR CH 16V 0.1U	1	
C244		ECUM1E104ZFN	C.CAPACITOR CH 25V 0.1U	1	
C245		ECUM1H103KBN	C.CAPACITOR CH 50V 0.01U	1	
C247		ECUM1H103KBN	C.CAPACITOR CH 50V 0.01U	1	
C248		ECEA0JU470	E.CAPACITOR 6.3V 47U	1	
C249		ECUM1H103KBN	C.CAPACITOR CH 50V 0.01U	1	
C257,58		ECUM1E104ZFN	C.CAPACITOR CH 25V 0.1U	2	
C260		ECUM1H221JCN	C.CAPACITOR CH 50V 220P	1	
C261		ECUM1H030DCN	C.CAPACITOR CH 50V 3P	1	
C263		ECUM1H103KBN	C.CAPACITOR CH 50V 0.01U	1	
C264		ECEA1HNR47S	E.CAPACITOR 50V 0.47U	1	

Ref.No.	Part No.	Part Name & Description	Pcs	Remarks
C266,67	ECUM1E104ZFN	C.CAPACITOR CH 25V 0.1U	2	
C268	ECUM1H103KBN	C.CAPACITOR CH 50V 0.01U	1	
C269	ECEA1AU101	E.CAPACITOR 10V 100U	1	
C270,71	ECUM1H103KBN	C.CAPACITOR CH 50V 0.01U	2	
C272	ECEA1AU101	E.CAPACITOR 10V 100U	1	
C273	ECUM1H103KBN	C.CAPACITOR CH 50V 0.01U	1	
C275	ECUM1H120JCN	C.CAPACITOR CH 50V 12P	1	
C276	ECUM1H560JCN	C.CAPACITOR CH 50V 56P	1	
C278	ECUM1H100DCN	C.CAPACITOR CH 50V 10P	1	
C279	ECUM1H680JCN	C.CAPACITOR CH 50V 68P	1	
C280	ECUM1H330JCN	C.CAPACITOR CH 50V 33P	1	
C281	ECUM1H100DCN	C.CAPACITOR CH 50V 10P	1	
C282	ECUM1C104KBN	C.CAPACITOR CH 16V 0.1U	1	
C283	ECUM1E104ZFN	C.CAPACITOR CH 25V 0.1U	1	
C284	ECUM1H103KBN	C.CAPACITOR CH 50V 0.01U	1	
C291	ECUM1H103KBN	C.CAPACITOR CH 50V 0.01U	1	
C292	ECEA1CU221	E.CAPACITOR 16V 220U	1	
C293	ECUM1H103KBN	C.CAPACITOR CH 50V 0.01U	1	
C294	ECEA0JU101	E.CAPACITOR 6.3V 100U	1	
C297,98	ECUM1E104ZFN	C.CAPACITOR CH 25V 0.1U	2	
C299	ECUM1H103KBN	C.CAPACITOR CH 50V 0.01U	1	
C300	ECEA1AU101	E.CAPACITOR 10V 100U	1	
C301	ECUM1H103KBN	C.CAPACITOR CH 50V 0.01U	1	
C303	ECUM1H271JCN	C.CAPACITOR CH 50V 270P	1	
C304	ECUM1H330JCN	C.CAPACITOR CH 50V 33P	1	
C305,06	ECEA1HNR47S	E.CAPACITOR 50V 0.47U	2	
C307,08	ECQM1H104JF	P.CAPACITOR 50V 0.1U	2	
C311	ECUM1H560JCN	C.CAPACITOR CH 50V 56P	1	
C312,13	ECUM1H120JCN	C.CAPACITOR CH 50V 12P	2	
C314	ECUM1H560JCN	C.CAPACITOR CH 50V 56P	1	
C501,02	ECEA1CU101	E.CAPACITOR 16V 100U	2	
C503	ECUM1H330JCN	C.CAPACITOR CH 50V 33P	1	
C504	ECUM1C104KBN	C.CAPACITOR CH 16V 0.1U	1	
C505	ECUM1H103KBN	C.CAPACITOR CH 50V 0.01U	1	
C506	ECEA1HNR47S	E.CAPACITOR 50V 0.47U	1	
C507,08	ECUM1H103KBN	C.CAPACITOR CH 50V 0.01U	2	
C510	ECUM1H103KBN	C.CAPACITOR CH 50V 0.01U	1	
C517	ECUM1H103KBN	C.CAPACITOR CH 50V 0.01U	1	
C518	ECUM1H330JCN	C.CAPACITOR CH 50V 33P	1	
C519,20	ECUM1H103KBN	C.CAPACITOR CH 50V 0.01U	2	
C521	ECEA0JU470	E.CAPACITOR 6.3V 47U	1	
C522	ECUM1H220JCN	C.CAPACITOR CH 50V 22P	1	
C523	ECUM1H181JCN	C.CAPACITOR CH 50V 180P	1	
C524	ECUM1H103KBN	C.CAPACITOR CH 50V 0.01U	1	
C525	ECEA0JU101	E.CAPACITOR 6.3V 100U	1	
C526	ECUM1H103KBN	C.CAPACITOR CH 50V 0.01U	1	
C527,28	ECEA1CU101	E.CAPACITOR 16V 100U	2	
C531	ECEA1CU101	E.CAPACITOR 16V 100U	1	
C532	ECUM1H103KBN	C.CAPACITOR CH 50V 0.01U	1	
C533	ECEA1CU101	E.CAPACITOR 16V 100U	1	
C534,35	ECUM1H103KBN	C.CAPACITOR CH 50V 0.01U	2	
C536,37	ECUM1H560JCN	C.CAPACITOR CH 50V 56P	2	
C538,39	ECUM1H103KBN	C.CAPACITOR CH 50V 0.01U	2	
C540	ECUM1E104ZFN	C.CAPACITOR CH 25V 0.1U	1	
C541	ECUM1H270JCN	C.CAPACITOR CH 50V 27P	1	
C542	ECUM1H221JCN	C.CAPACITOR CH 50V 220P	1	
C543	ECUM1H120JCN	C.CAPACITOR CH 50V 12P	1	
C546	ECUM1H101JCN	C.CAPACITOR CH 50V 100P	1	
C547	ECUM1H470JCN	C.CAPACITOR CH 50V 47P	1	
C548	ECUM1H100DCN	C.CAPACITOR CH 50V 10P	1	
C549	ECUM1H330JCN	C.CAPACITOR CH 50V 33P	1	
C550	ECUM1H103KBN	C.CAPACITOR CH 50V 0.01U	1	
C551	ECUM1H471JCN	C.CAPACITOR CH 50V 470P	1	
C552	ECUM1H270JCN	C.CAPACITOR CH 50V 27P	1	
C553	ECUM1H103KBN	C.CAPACITOR CH 50V 0.01U	1	
C554	ECUM1E104ZFN	C.CAPACITOR CH 25V 0.1U	1	
C555	ECUM1H103KBN	C.CAPACITOR CH 50V 0.01U	1	
C559	ECEA0JU470	E.CAPACITOR 6.3V 47U	1	
C560	ECUM1H103KBN	C.CAPACITOR CH 50V 0.01U	1	
C561	ECEA0JN330S	E.CAPACITOR 6.3V 33U	1	
C562	ECUM1H680JCN	C.CAPACITOR CH 50V 68P	1	
C563	ECUM1H271JCN	C.CAPACITOR CH 50V 270P	1	
C564	ECUM1H151JCN	C.CAPACITOR CH 50V 150P	1	
C565	ECUM1H471JCN	C.CAPACITOR CH 50V 470P	1	
C566	ECEA1CU470	E.CAPACITOR 16V 47U	1	

Ref.No.	Part No.	Part Name & Description	Pcs	Remarks
C567-69	ECUM1H103KBN	C.CAPACITOR CH 50V 0.01U	3	
C570	ECEA1CU470	E.CAPACITOR 16V 47U	1	
C571	ECUM1H103KBN	C.CAPACITOR CH 50V 0.01U	1	
C572	ECUM1E104ZFN	C.CAPACITOR CH 25V 0.1U	1	
C573	ECUM1H103KBN	C.CAPACITOR CH 50V 0.01U	1	
C574,75	ECUM1H220JCN	C.CAPACITOR CH 50V 22P	2	
C576,77	ECUM1H103KBN	C.CAPACITOR CH 50V 0.01U	2	
C578	ECEA0JU101	E.CAPACITOR 6.3V 100U	1	
C579	ECUM1E104ZFN	C.CAPACITOR CH 25V 0.1U	1	
C580,81	ECUM1H220JCN	C.CAPACITOR CH 50V 22P	2	
C582	ECEA0JU101	E.CAPACITOR 6.3V 100U	1	
C583	ECUM1E104ZFN	C.CAPACITOR CH 25V 0.1U	1	
C584	ECUM1H103KBN	C.CAPACITOR CH 50V 0.01U	1	
C585	ECUM1H820JCN	C.CAPACITOR CH 50V 82P	1	
C586	ECUM1H100DCN	C.CAPACITOR CH 50V 10P	1	
C587,88	ECUM1H103KBN	C.CAPACITOR CH 50V 0.01U	2	
C589	ECUM1H271JCN	C.CAPACITOR CH 50V 270P	1	
C590	ECUM1H221JCN	C.CAPACITOR CH 50V 220P	1	
C591	ECUM1H820JCN	C.CAPACITOR CH 50V 82P	1	
C592-97	ECUM1H103KBN	C.CAPACITOR CH 50V 0.01U	6	
C598	ECEA1CU101	E.CAPACITOR 16V 100U	1	
C599,00	ECUM1H103KBN	C.CAPACITOR CH 50V 0.01U	2	
C601	ECEA1CU101	E.CAPACITOR 16V 100U	1	
C602	ECUM1H103KBN	C.CAPACITOR CH 50V 0.01U	1	
C603	ECEA1AU101	E.CAPACITOR 10V 100U	1	
C604	ECUM1H103KBN	C.CAPACITOR CH 50V 0.01U	1	
C605	ECEA1AU101	E.CAPACITOR 10V 100U	1	
C606	ECUM1H103KBN	C.CAPACITOR CH 50V 0.01U	1	
C607	ECEA0JU101	E.CAPACITOR 6.3V 100U	1	
C608	ECUM1H103KBN	C.CAPACITOR CH 50V 0.01U	1	
C609	ECEA0JU101	E.CAPACITOR 6.3V 100U	1	
C610	ECUM1H103KBN	C.CAPACITOR CH 50V 0.01U	1	
C611	ECUM1E104ZFN	C.CAPACITOR CH 25V 0.1U	1	
C612	ECUM1H103KBN	C.CAPACITOR CH 50V 0.01U	1	
C615-18	ECUM1H103KBN	C.CAPACITOR CH 50V 0.01U	4	
C619	ECUM1H221JCN	C.CAPACITOR CH 50V 220P	1	
C620	ECQM1H104JF	P.CAPACITOR 50V 0.1U	1	
C621	ECEA1CU100	E.CAPACITOR 16V 10U	1	
C622	ECQM1H104JF	P.CAPACITOR 50V 0.1U	1	
C623	ECEA1CU470	E.CAPACITOR 16V 47U	1	
C624	ECQM1H104JF	P.CAPACITOR 50V 0.1U	1	
C625	ECEA1CU470	E.CAPACITOR 16V 47U	1	
C626	ECQM1H104JF	P.CAPACITOR 50V 0.1U	1	
C627,28	ECUM1H122JN	C.CAPACITOR CH 50V 1200P	2	
C629	ECUM1H221JCN	C.CAPACITOR CH 50V 220P	1	
C630,31	ECUM1H122JN	C.CAPACITOR CH 50V 1200P	2	
C632	ECUM1H103KBN	C.CAPACITOR CH 50V 0.01U	1	
C634	ECUM1H270JCN	C.CAPACITOR CH 50V 27P	1	
C635	ECCF1H120JC	C.CAPACITOR 50V 12P	1	
C800	ECUM1H122JN	C.CAPACITOR CH 50V 1200P	1	
C801	ECUM1H151JCN	C.CAPACITOR CH 50V 150P	1	
C802	ECQM1H122JF	P.CAPACITOR 50V 1200P	1	
C803	ECQV1H684JZ	P.CAPACITOR 50V 0.68U	1	
C804,06	ECUM1H151JCN	C.CAPACITOR CH 50V 150P	2	
C808	ECUM1H151JCN	C.CAPACITOR CH 50V 150P	1	
C809,10	ECUM1H122JN	C.CAPACITOR CH 50V 1200P	2	
C812	ECUM1H103KBN	C.CAPACITOR CH 50V 0.01U	1	
C813	ECUM1H101JCN	C.CAPACITOR CH 50V 100P	1	
C814-22	ECUM1H122JN	C.CAPACITOR CH 50V 1200P	9	
C823-25	ECUM1E104ZFN	C.CAPACITOR CH 25V 0.1U	3	
C827	ECEA0JU101	E.CAPACITOR 6.3V 100U	1	
C828,29	ECUM1H101JCN	C.CAPACITOR CH 50V 100P	2	
C830	ECUM1H820JCN	C.CAPACITOR CH 50V 82P	1	
C831	ECUM1H103KBN	C.CAPACITOR CH 50V 0.01U	1	
C832	ECUM1E104ZFN	C.CAPACITOR CH 25V 0.1U	1	
C834	ECEA1CN100S	E.CAPACITOR 16V 10U	1	
C835	ECEA1EN4R7S	E.CAPACITOR 25V 4.7U	1	
C836	ECEA0JN330S	E.CAPACITOR 6.3V 33U	1	
C837	ECEA1EN4R7S	E.CAPACITOR 25V 4.7U	1	
C838	ECUM1E104ZFN	C.CAPACITOR CH 25V 0.1U	1	
C841	ECUM1H103KBN	C.CAPACITOR CH 50V 0.01U	1	
C842	ECEA0JU101	E.CAPACITOR 6.3V 100U	1	
C843,44	ECUM1H103KBN	C.CAPACITOR CH 50V 0.01U	2	
C845	ECEA0JU101	E.CAPACITOR 6.3V 100U	1	
C846,47	ECUM1H103KBN	C.CAPACITOR CH 50V 0.01U	2	

Ref.No.	Part No.	Part Name & Description	Pcs	Remarks
C848	ECEA0JU101	E.CAPACITOR 6.3V 100U	1	
C849	ECUM1H103KBN	C.CAPACITOR CH 50V 0.01U	1	
C850	ECEA0JU101	E.CAPACITOR 6.3V 100U	1	
C851	ECUM1H820JCN	C.CAPACITOR CH 50V 82P	1	
C852	ECUM1H103KBN	C.CAPACITOR CH 50V 0.01U	1	
C853	ECUM1H122JN	C.CAPACITOR CH 50V 1200P	1	
C854	ECQB1H272JF	P.CAPACITOR 50V 2700P	1	
C855,56	ECCF1H331JC	C.CAPACITOR 50V 330P	2	
C857	ECCF1H330JC	C.CAPACITOR 50V 33P	1	
C1001	ECEA1HU010	E.CAPACITOR 50V 1U	1	
C1003,04	ECEA1CN100S	E.CAPACITOR 16V 10U	2	
C1005	ECUM1H221JCN	C.CAPACITOR CH 50V 220P	1	
C1006	ECUM1H470JCN	C.CAPACITOR CH 50V 47P	1	
D1	1S251	DIODE	1	
D2	MA153	DIODE	1	
D4	MA153	DIODE	1	
D8	MA151WK	DIODE	1	
D11	MA151WK	DIODE	1	
D200,01	RD4.7EB2	ZENER 4.7V	2	
D203,04	MA151K	DIODE	2	
D210	MA151K	DIODE	1	
D501	RD3.6EB	ZENER 3.6V	1	
D508	RD4.7EB2	ZENER 4.7V	1	
D510,11	MA335-R	DIODE	2	
D512	MA153	DIODE	1	
D514	MA151K	DIODE	1	
D800	MA704	DIODE	1	
D801	MA153	DIODE	1	
D802	MA151K	DIODE	1	
D803	MA165TA	DIODE	1	
FL1	VLF0650	FILTER	1	
FL3	VLF0754	FILTER	1	
FL200	VLF0712	FILTER	1	
FL201,02	VLF0753	FILTER	2	
IC1	AN78N09	IC	1	
IC1	MC10107L	IC	1	
IC2	AN79N09	IC	1	
IC3	MC74HC4053F	IC	1	
IC4-C6	TL082CPS	IC	3	
IC7	HA19211BNT	IC	1	
IC8	MC74HC574AF	IC	1	
IC9	TL082CPS	IC	1	
IC10-12	TL082CPS	IC	3	
IC13	HA19211BNT	IC	1	
IC14	MC74HC574AF	IC	1	
IC15	AN78N09	IC	1	
IC16	AN79N09	IC	1	
IC17	AN79L05	IC	1	
IC18,19	AN78N05	IC	2	
IC26,27	AN91A12S	IC	2	
IC28	MC74HC08AF	IC	1	
IC29	SN74LS123NS	IC	1	
IC30	NE521D	IC	1	
IC32	AN78N05	IC	1	
IC33	AN79N05	IC	1	
IC200	AN78N09	IC	1	
IC201	AN79N09	IC	1	
IC202	AN78N09	IC	1	
IC203	AN79N09	IC	1	
IC204	AN78N09	IC	1	
IC205	AN79N09	IC	1	
IC206	TL082CPS	IC	1	
IC207	CA3054	IC	1	
IC208-10	TL082CPS	IC	3	
IC211	AN78L05	IC	1	
IC215	TL082CPS	IC	1	

Ref.No.	Part No.	Part Name & Description	Pcs	Remarks
IC216	AN79L09	IC	1	
IC501	TL082CPS	IC	1	
IC502,03	CA3054	IC	2	
IC504,05	NJM1496M	IC	2	
IC506	10116D	IC	1	
IC507	MC74HC04AF	IC	1	
IC508	NJM1496M	IC	1	
IC509	MC74HC00AF	IC	1	
IC510	MC74HC74AF	IC	1	
IC511	SN74LS123NS	IC	1	
IC512	10116D	IC	1	
IC513	MC74HC00AF	IC	1	
IC514	MC74HC74AF	IC	1	
IC517	AN78N09	IC	1	
IC518	AN79N09	IC	1	
IC519	AN78N05	IC	1	
IC520	AN79N05	IC	1	
IC521	AN78N09	IC	1	
IC522	AN79N09	IC	1	
IC523	MC74HC04AF	IC	1	
IC800	NE521D	IC	1	
IC801	MC74HC126AF	IC	1	
IC802,03	MC10125L	IC	2	
IC804	MN53010VYD	IC	1	
IC805	UPC311G	IC	1	
IC806	MC74HC126AF	IC	1	
IC807-14	TL082CPS	IC	8	
IC815-17	MC74HC4053F	IC	3	
IC818	AN78N09	IC	1	
IC819	AN79N09	IC	1	
IC820	AN78N05	IC	1	
IC821	AN79N05	IC	1	
L1-L3	VLP0017	COIL	3	
L5	VLQEL05S821J	COIL 820UH	1	
L6-L9	VLP0017	COIL	4	
L10	VLQEL05S221J	COIL 220UH	1	
L12	VLQEL05S5R6J	COIL 5.6UH	1	
L13	VLQEL05S390J	COIL 39UH	1	
L14	VLQEL05S100J	COIL 10UH	1	
L15	VLQEL05S5R6J	COIL 5.6UH	1	
L17	VLQEL05S5R6J	COIL 5.6UH	1	
L18	VLQEL05S390J	COIL 39UH	1	
L19	VLQEL05S100J	COIL 10UH	1	
L20	VLQEL05S5R6J	COIL 5.6UH	1	
L200	VLQEL05S6R8J	COIL 6.8UH	1	
L201	VLQEL05S151J	COIL 150UH	1	
L203	VLQEL05S151J	COIL 150UH	1	
L205,06	VLP0017	COIL	2	
L208,09	VLQEL05S6R8J	COIL 6.8UH	2	
L210	VLQEL05S101J	COIL 100UH	1	
L211,12	VLQEL05S6R8J	COIL 6.8UH	2	
L501,02	VLQEL05S101K	COIL 100UH	2	
L503	VLQEL05S6R8J	COIL 6.8UH	1	
L505	VLQEL05S101K	COIL 100UH	1	
L506	VLQEL05S680J	COIL 68UH	1	
L507,08	VLQEL05S101K	COIL 100UH	2	
L511	VLQEL05S150J	COIL 15UH	1	
L512	VLQEL05S5R6J	COIL 5.6UH	1	
L513	VLQEL05S6R8J	COIL 6.8UH	1	
L514	VLQEL05S180J	COIL 18UH	1	
L515	VLQEL05S560J	COIL 56UH	1	
L518,19	VLQEL05S101K	COIL 100UH	2	
L520,21	VLQEL05S470J	COIL 47UH	2	
L522,23	VLP0017	COIL	2	
L800	VLQEL06F8R2J	COIL 8.2UH	1	
L801	VLQEL05S8R2J	COIL 8.2UH	1	
Q1	2SD601-R	TRANSISTOR CHIP	1	O,R)
Q2	2SB709-R	TRANSISTOR CHIP	1	O,R)
Q3	2SD601-R	TRANSISTOR CHIP	1	O,R)

Ref.No.	Part No.	Part Name & Description	Pcs	Remarks
Q4,Q5	2SB709-R	TRANSISTOR CHIP	2	(Q,R)
Q6,Q7	2SC2404-C	TRANSISTOR CHIP	2	(C,D)
Q8	2SA1022-B	TRANSISTOR CHIP	1	(B,C)
Q9	2SC2295-B	TRANSISTOR CHIP	1	(B,C)
Q10	2SA1022-B	TRANSISTOR CHIP	1	(B,C)
Q11	2SK374-R	TRANSISTOR	1	(Q,R)
Q12	2SB709-R	TRANSISTOR CHIP	1	(Q,R)
Q13	2SD601-R	TRANSISTOR CHIP	1	(Q,R)
Q14	2SB709-R	TRANSISTOR CHIP	1	(Q,R)
Q15	2SD601-R	TRANSISTOR CHIP	1	(Q,R)
Q16	2SB709-R	TRANSISTOR CHIP	1	(Q,R)
Q17,18	2SC2404-C	TRANSISTOR CHIP	2	(C,D)
Q19	2SA1022-B	TRANSISTOR CHIP	1	(B,C)
Q20	2SC2295-B	TRANSISTOR CHIP	1	(B,C)
Q21	2SA1022-B	TRANSISTOR CHIP	1	(B,C)
Q22	2SK374-R	TRANSISTOR	1	(Q,R)
Q23	2SB709-R	TRANSISTOR CHIP	1	(Q,R)
Q24	2SD601-R	TRANSISTOR CHIP	1	(Q,R)
Q25	2SA1022-B	TRANSISTOR CHIP	1	(B,C)
Q26-28	2SD601-R	TRANSISTOR CHIP	3	(Q,R)
Q200	2SD601-R	TRANSISTOR CHIP	1	(Q,R)
Q201,02	2SB709-R	TRANSISTOR CHIP	2	(Q,R)
Q203,04	2SD601-R	TRANSISTOR CHIP	2	(Q,R)
Q205,06	2SC2404-C	TRANSISTOR CHIP	2	(C,D)
Q207	2SA1022-B	TRANSISTOR CHIP	1	(B,C)
Q208	2SC2295-B	TRANSISTOR CHIP	1	(B,C)
Q209	2SD601-R	TRANSISTOR CHIP	1	(Q,R)
Q210	2SK198	TRANSISTOR	1	(Q,R)
Q211-15	2SD601-R	TRANSISTOR CHIP	5	(Q,R)
Q219	2SD601-R	TRANSISTOR CHIP	1	(Q,R)
Q220,21	2SB709-R	TRANSISTOR CHIP	2	(Q,R)
Q222	2SD601-R	TRANSISTOR CHIP	1	(Q,R)
Q223,24	2SC2404-C	TRANSISTOR CHIP	2	(C,D)
Q225	2SA1022-B	TRANSISTOR CHIP	1	(B,C)
Q226	2SC2295-B	TRANSISTOR CHIP	1	(B,C)
Q227	2SD601-R	TRANSISTOR CHIP	1	(Q,R)
Q229	2SB709-R	TRANSISTOR CHIP	1	(Q,R)
Q230	2SD601-R	TRANSISTOR CHIP	1	(Q,R)
Q232,33	2SB709-R	TRANSISTOR CHIP	2	(Q,R)
Q234	2SD601-R	TRANSISTOR CHIP	1	(Q,R)
Q235,36	2SC2404-C	TRANSISTOR CHIP	2	(C,D)
Q237	2SK198	TRANSISTOR	1	(Q,R)
Q238,39	2SB709-R	TRANSISTOR CHIP	2	(Q,R)
Q240	2SD601-R	TRANSISTOR CHIP	1	(Q,R)
Q241,42	2SC2404-C	TRANSISTOR CHIP	2	(C,D)
Q243	2SA1022-B	TRANSISTOR CHIP	1	(B,C)
Q244	2SC2295-B	TRANSISTOR CHIP	1	(B,C)
Q245	2SD601-R	TRANSISTOR CHIP	1	(Q,R)
Q246	2SK198	TRANSISTOR	1	(Q,R)
Q247	2SB709-R	TRANSISTOR CHIP	1	(Q,R)
Q248,49	2SD601-R	TRANSISTOR CHIP	2	(Q,R)
Q250,51	2SB709-R	TRANSISTOR CHIP	2	(Q,R)
Q252	2SD601-R	TRANSISTOR CHIP	1	(Q,R)
Q253,54	2SC2404-C	TRANSISTOR CHIP	2	(C,D)
Q255	2SK198	TRANSISTOR	1	(Q,R)
Q256	2SC2404-C	TRANSISTOR CHIP	1	(C,D)
Q257	2SB709-R	TRANSISTOR CHIP	1	(Q,R)
Q258	2SA1022-B	TRANSISTOR CHIP	1	(B,C)
Q259-63	2SC2295-B	TRANSISTOR CHIP	5	(B,C)
Q265	2SC2295-B	TRANSISTOR CHIP	1	(B,C)
Q266,67	2SD601-R	TRANSISTOR CHIP	2	(Q,R)
Q284	2SK198	TRANSISTOR	1	(Q,R)
Q285	2SC2295-B	TRANSISTOR CHIP	1	(B,C)
Q286,87	2SD601-R	TRANSISTOR CHIP	2	(Q,R)
Q288,89	2SB709-R	TRANSISTOR CHIP	2	(Q,R)
Q290	2SD601-R	TRANSISTOR CHIP	1	(Q,R)
Q291,92	2SB709-R	TRANSISTOR CHIP	2	(Q,R)
Q501,02	2SC2295-B	TRANSISTOR CHIP	2	(B,C)
Q503,04	2SD601-R	TRANSISTOR CHIP	2	(Q,R)
Q505	2SK198	TRANSISTOR	1	(Q,R)
Q506	2SB709-R	TRANSISTOR CHIP	1	(Q,R)
Q507-09	2SD601-R	TRANSISTOR CHIP	3	(Q,R)
Q514-16	2SD601-R	TRANSISTOR CHIP	3	(Q,R)
Q518	2SD601-R	TRANSISTOR CHIP	1	(Q,R)
Q519	2SC2295-B	TRANSISTOR CHIP	1	(B,C)

Ref.No.	Part No.	Part Name & Description	Pcs	Remarks
Q520	2SD601-R	TRANSISTOR CHIP	1	(Q,R)
Q521,22	2SC2295-B	TRANSISTOR CHIP	2	(B,C)
Q523	2SD601-R	TRANSISTOR CHIP	1	(Q,R)
Q524,25	2SB709-R	TRANSISTOR CHIP	2	(Q,R)
Q526,27	2SC2295-B	TRANSISTOR CHIP	2	(B,C)
Q528	2SD601-R	TRANSISTOR CHIP	1	(Q,R)
Q532	2SB709-R	TRANSISTOR CHIP	1	(Q,R)
Q533-37	2SD601-R	TRANSISTOR CHIP	5	(Q,R)
Q538	2SB709-R	TRANSISTOR CHIP	1	(Q,R)
Q539	2SD601-R	TRANSISTOR CHIP	1	(Q,R)
Q540	2SB709-R	TRANSISTOR CHIP	1	(Q,R)
Q541	2SD601-R	TRANSISTOR CHIP	1	(Q,R)
Q542	2SB709-R	TRANSISTOR CHIP	1	(Q,R)
Q543	2SD601-R	TRANSISTOR CHIP	1	(Q,R)
Q544	2SB709-R	TRANSISTOR CHIP	1	(Q,R)
Q545-52	2SD601-R	TRANSISTOR CHIP	8	(Q,R)
Q800	2SC2295-B	TRANSISTOR CHIP	1	(B,C)
Q801	2SD601-R	TRANSISTOR CHIP	1	(Q,R)
Q802	2SB709-R	TRANSISTOR CHIP	1	(Q,R)
Q803	2SC2295-B	TRANSISTOR CHIP	1	(B,C)
Q804	2SB709-R	TRANSISTOR CHIP	1	(Q,R)
Q805	2SC2295-B	TRANSISTOR CHIP	1	(B,C)
Q807	2SD601-R	TRANSISTOR CHIP	1	(Q,R)
Q808-15	2SC2295-B	TRANSISTOR CHIP	8	(B,C)
Q816,17	2SB709-R	TRANSISTOR CHIP	2	(Q,R)
Q818,19	2SC2295-B	TRANSISTOR CHIP	2	(B,C)
Q826	ECUM1E104ZFN	C.CAPACITOR CH 25V 0.1U	1	
Q833	ECUM1E104ZFN	C.CAPACITOR CH 25V 0.1U	1	
		RESISTORS		
R1	ERJ6GEYG222	M.RESISTOR CH 1/10W 2.2K	1	
R2,R3	ERJ6GEYG220	M.RESISTOR CH 1/10W 22	2	
R4,R5	ERJ6GEYG152	M.RESISTOR CH 1/10W 1.5K	2	
R6,R7	VRE0034E561	M.RESISTOR CH 1/10W 560	2	
R8	ERJ6GEYG150	M.RESISTOR CH 1/10W 15	1	
R9	ERJ6GEYG473	M.RESISTOR CH 1/10W 47K	1	
R10	VRE0034E301	M.RESISTOR CH 1/10W 300	1	
R11	ERJ6GEYG220	M.RESISTOR CH 1/10W 22	1	
R12	ERJ6GEYG122	M.RESISTOR CH 1/10W 1.2K	1	
R13	VRE0034E221	M.RESISTOR CH 1/10W 220	1	
R14	VRE0034E121	M.RESISTOR CH 1/10W 120	1	
R15	VRE0034E301	M.RESISTOR CH 1/10W 300	1	
R16	ERJ6GEYG683	M.RESISTOR CH 1/10W 68K	1	
R17	ERJ6GEYG332	M.RESISTOR CH 1/10W 3.3K	1	
R18	ERJ6GEYG151	M.RESISTOR CH 1/10W 150	1	
R19	ERJ6GEYG101	M.RESISTOR CH 1/10W 100	1	
R20	ERJ6GEYG472	M.RESISTOR CH 1/10W 4.7K	1	
R21	ERJ6GEYG183	M.RESISTOR CH 1/10W 18K	1	
R22	ERJ6GEYG821	M.RESISTOR CH 1/10W 820	1	
R23,24	ERJ6GEYG102	M.RESISTOR CH 1/10W 1K	2	
R25,26	ERJ6GEYG101	M.RESISTOR CH 1/10W 100	2	
R27	ERJ6GEYG122	M.RESISTOR CH 1/10W 1.2K	1	
R28	ERJ6GEYG471	M.RESISTOR CH 1/10W 470	1	
R29	ERJ6GEYG222	M.RESISTOR CH 1/10W 2.2K	1	
R30	ERJ6GEYG272	M.RESISTOR CH 1/10W 2.7K	1	
R31	VRE0034E333	M.RESISTOR CH 1/10W 33K	1	
R32	VRE0034E103	M.RESISTOR CH 1/10W 10K	1	
R33	ERJ6GEYG222	M.RESISTOR CH 1/10W 2.2K	1	
R34	ERJ6GEYG223	M.RESISTOR CH 1/10W 22K	1	
R35	ERJ6GEYG562	M.RESISTOR CH 1/10W 5.6K	1	
R36,37	ERJ6GEYG332	M.RESISTOR CH 1/10W 3.3K	2	
R38	ERJ6GEYG823	M.RESISTOR CH 1/10W 82K	1	
R39	ERJ6GEYG332	M.RESISTOR CH 1/10W 3.3K	1	
R40	ERJ6GEYG222	M.RESISTOR CH 1/10W 2.2K	1	
R41	ERJ6GEYG563	M.RESISTOR CH 1/10W 56K	1	
R42	ERJ6GEYG333	M.RESISTOR CH 1/10W 33K	1	
R43	ERJ6GEYG332	M.RESISTOR CH 1/10W 3.3K	1	
R44	ERJ6GEYG272	M.RESISTOR CH 1/10W 2.7K	1	
R45	ERJ6GEYG273	M.RESISTOR CH 1/10W 27K	1	
R46	ERJ6GEYG224	M.RESISTOR CH 1/10W 220K	1	
R47	ERJ6GEYG472	M.RESISTOR CH 1/10W 4.7K	1	
R48	ERJ6GEYG272	M.RESISTOR CH 1/10W 2.7K	1	
R49	ERJ6GEYG221	M.RESISTOR CH 1/10W 220	1	

Ref.No.	Part No.	Part Name & Description	Pcs	Remarks
R50	ERJ6GEYG391	M.RESISTOR CH 1/10W 390	1	
R51	VRE0034E273	M.RESISTOR CH 1/10W 27K	1	
R52	VRE0034E203	M.RESISTOR CH 1/10W 20K	1	
R53	VRE0034E153	M.RESISTOR CH 1/10W 15K	1	
R54	ERJ6GEYG220	M.RESISTOR CH 1/10W 22	1	
R55	ERJ6GEYG222	M.RESISTOR CH 1/10W 2.2K	1	
R56	ERJ6GEYG332	M.RESISTOR CH 1/10W 3.3K	1	
R57	ERJ6GEYG222	M.RESISTOR CH 1/10W 2.2K	1	
R58,59	ERJ6GEYG220	M.RESISTOR CH 1/10W 22	2	
R60,61	ERJ6GEYG152	M.RESISTOR CH 1/10W 1.5K	2	
R62,63	VRE0034E561	M.RESISTOR CH 1/10W 560	2	
R64	ERJ6GEYG150	M.RESISTOR CH 1/10W 15	1	
R65	VRE0034E301	M.RESISTOR CH 1/10W 300	1	
R66	ERJ6GEYG220	M.RESISTOR CH 1/10W 22	1	
R67	ERJ6GEYG222	M.RESISTOR CH 1/10W 2.2K	1	
R68	ERJ6GEYG102	M.RESISTOR CH 1/10W 1K	1	
R69	ERJ6GEYG471	M.RESISTOR CH 1/10W 470	1	
R70	ERJ6GEYG122	M.RESISTOR CH 1/10W 1.2K	1	
R71	ERJ6GEYG101	M.RESISTOR CH 1/10W 100	1	
R72	ERJ6GEYG472	M.RESISTOR CH 1/10W 4.7K	1	
R73	ERJ6GEYG183	M.RESISTOR CH 1/10W 18K	1	
R74	ERJ6GEYG102	M.RESISTOR CH 1/10W 1K	1	
R75	ERJ6GEYG101	M.RESISTOR CH 1/10W 100	1	
R76	ERJ6GEYG102	M.RESISTOR CH 1/10W 1K	1	
R77	ERJ6GEYG101	M.RESISTOR CH 1/10W 100	1	
R78	ERJ6GEYG122	M.RESISTOR CH 1/10W 1.2K	1	
R79	ERJ6GEYG471	M.RESISTOR CH 1/10W 470	1	
R80	ERJ6GEYG222	M.RESISTOR CH 1/10W 2.2K	1	
R81	ERJ6GEYG272	M.RESISTOR CH 1/10W 2.7K	1	
R82	ERJ6GEYG223	M.RESISTOR CH 1/10W 22K	1	
R83	ERJ6GEYG222	M.RESISTOR CH 1/10W 2.2K	1	
R84	ERJ6GEYG220	M.RESISTOR CH 1/10W 22	1	
R85	ERJ6GEYG562	M.RESISTOR CH 1/10W 5.6K	1	
R86,87	ERJ6GEYG332	M.RESISTOR CH 1/10W 3.3K	2	
R88	ERJ6GEYG823	M.RESISTOR CH 1/10W 82K	1	
R89	ERJ6GEYG332	M.RESISTOR CH 1/10W 3.3K	1	
R90	ERJ6GEYG222	M.RESISTOR CH 1/10W 2.2K	1	
R91	ERJ6GEYG563	M.RESISTOR CH 1/10W 56K	1	
R92	ERJ6GEYG333	M.RESISTOR CH 1/10W 33K	1	
R93	ERJ6GEYG332	M.RESISTOR CH 1/10W 3.3K	1	
R94	ERJ6GEYG273	M.RESISTOR CH 1/10W 27K	1	
R95	ERJ6GEYG272	M.RESISTOR CH 1/10W 2.7K	1	
R96	ERJ6GEYG472	M.RESISTOR CH 1/10W 4.7K	1	
R97	ERJ6GEYG224	M.RESISTOR CH 1/10W 220K	1	
R98	ERJ6GEYG272	M.RESISTOR CH 1/10W 2.7K	1	
R99	ERJ6GEYG221	M.RESISTOR CH 1/10W 220	1	
R100	ERJ6GEYG222	M.RESISTOR CH 1/10W 2.2K	1	
R101	ERJ6GEYG332	M.RESISTOR CH 1/10W 3.3K	1	
R102	ERJ6GEYG272	M.RESISTOR CH 1/10W 2.7K	1	
R103	VRE0034E223	M.RESISTOR CH 1/10W 22K	1	
R104	VRE0034E153	M.RESISTOR CH 1/10W 15K	1	
R105	ERJ6GEYG272	M.RESISTOR CH 1/10W 2.7K	1	
R109,10	ERJ6GEY0R00	M.RESISTOR CH 1/10W 0	2	
R133	ERJ6GEYG224	M.RESISTOR CH 1/10W 220K	1	
R135,36	ERJ6GEYG822	M.RESISTOR CH 1/10W 8.2K	2	
R137	ERJ6GEYG222	M.RESISTOR CH 1/10W 2.2K	1	
R138	ERJ6GEYG102	M.RESISTOR CH 1/10W 1K	1	
R139	ERJ6GEYG222	M.RESISTOR CH 1/10W 2.2K	1	
R140	ERJ6GEYG104	M.RESISTOR CH 1/10W 100K	1	
R141	ERJ6GEYG470	M.RESISTOR CH 1/10W 47	1	
R142	ERJ6GEYG681	M.RESISTOR CH 1/10W 680	1	
R143,44	ERJ6GEYG301	M.RESISTOR CH 1/10W 300	2	
R145	ERJ6GEYG223	M.RESISTOR CH 1/10W 22K	1	
R146	ERJ6GEYG105	M.RESISTOR CH 1/10W 1M	1	
R148,49	ERJ6GEYG103	M.RESISTOR CH 1/10W 10K	2	
R150	ERJ6GEYG104	M.RESISTOR CH 1/10W 100K	1	
R151	ERJ6GEYG102	M.RESISTOR CH 1/10W 1K	1	
R152	ERJ6GEYG222	M.RESISTOR CH 1/10W 2.2K	1	
R153	ERJ6GEYG333	M.RESISTOR CH 1/10W 33K	1	
R154	ERJ6GEYG104	M.RESISTOR CH 1/10W 100K	1	
R155	ERJ6GEYG332	M.RESISTOR CH 1/10W 3.3K	1	
R156	ERJ6GEYG472	M.RESISTOR CH 1/10W 4.7K	1	
R157	ERJ6GEYG103	M.RESISTOR CH 1/10W 10K	1	
R158	ERJ6GEYG221	M.RESISTOR CH 1/10W 220	1	
R159	ERJ6GEYG681	M.RESISTOR CH 1/10W 680	1	

Ref.No.	Part No.	Part Name & Description	Pcs	Remarks
R160,61	ERJ6GEYG301	M.RESISTOR CH 1/10W 300	2	
R162,63	ERJ6GEYG103	M.RESISTOR CH 1/10W 10K	2	
R164,65	ERJ6GEY0R00	M.RESISTOR CH 1/10W 0	2	
R166,67	ERJ6GEYG102	M.RESISTOR CH 1/10W 1K	2	
R168	ERJ6GEYG470	M.RESISTOR CH 1/10W 47	1	
R169,70	ERJ6GEYG272	M.RESISTOR CH 1/10W 2.7K	2	
R171	ERJ6GEYG102	M.RESISTOR CH 1/10W 1K	1	
R172	ERJ6GEYG272	M.RESISTOR CH 1/10W 2.7K	1	
R173	ERJ6GEYG470	M.RESISTOR CH 1/10W 47	1	
R174	ERJ6GEYJ471	M.RESISTOR CH 1/10W 470	1	
R175	ERJ6GEY0R00	M.RESISTOR CH 1/10W 0	1	
R176	ERDS2TJ101	C.RESISTOR 1/4W 100	1	
R178	ERDS2TJ681	C.RESISTOR 1/4W 680	1	
R200	ERJ6GEYG272	M.RESISTOR CH 1/10W 2.7K	1	
R201	ERJ6GEYG222	M.RESISTOR CH 1/10W 2.2K	1	
R202,03	VRE0034E331	M.RESISTOR CH 1/10W 330	2	
R204	ERJ6GEYG470	M.RESISTOR CH 1/10W 47	1	
R205	ERJ6GEYG272	M.RESISTOR CH 1/10W 2.7K	1	
R206,07	VRE0034E102	M.RESISTOR CH 1/10W 1K	2	
R209	VRE0034E621	M.RESISTOR CH 1/10W 620	1	
R210,11	ERJ6GEYG272	M.RESISTOR CH 1/10W 2.7K	2	
R212	ERJ6GEYG102	M.RESISTOR CH 1/10W 1K	1	
R213	ERJ6GEYG221	M.RESISTOR CH 1/10W 220	1	
R214	ERJ6GEYG681	M.RESISTOR CH 1/10W 680	1	
R215	ERJ6GEYG101	M.RESISTOR CH 1/10W 100	1	
R216	ERJ6GEYG102	M.RESISTOR CH 1/10W 1K	1	
R217	ERJ6GEYG101	M.RESISTOR CH 1/10W 100	1	
R218	ERJ6GEYG102	M.RESISTOR CH 1/10W 1K	1	
R219	ERJ6GEYG152	M.RESISTOR CH 1/10W 1.5K	1	
R220	ERJ6GEYG222	M.RESISTOR CH 1/10W 2.2K	1	
R221	ERJ6GEYG471	M.RESISTOR CH 1/10W 470	1	
R222,23	ERJ6GEYG222	M.RESISTOR CH 1/10W 2.2K	2	
R224	ERJ6GEYG101	M.RESISTOR CH 1/10W 100	1	
R225	ERJ6GEYG683	M.RESISTOR CH 1/10W 68K	1	
R226	ERJ6GEYG272	M.RESISTOR CH 1/10W 2.7K	1	
R227	ERJ6GEYG222	M.RESISTOR CH 1/10W 2.2K	1	
R228	ERJ6GEYG103	M.RESISTOR CH 1/10W 10K	1	
R229	ERJ6GEYG102	M.RESISTOR CH 1/10W 1K	1	
R230	ERJ6GEYG222	M.RESISTOR CH 1/10W 2.2K	1	
R231	ERJ6GEYG470	M.RESISTOR CH 1/10W 47	1	
R233	ERJ6GEYG102	M.RESISTOR CH 1/10W 1K	1	
R234	ERJ6GEYG681	M.RESISTOR CH 1/10W 680	1	
R235	ERJ6GEYG561	M.RESISTOR CH 1/10W 560	1	
R236	ERJ6GEYG121	M.RESISTOR CH 1/10W 120	1	
R237	ERJ6GEYG391	M.RESISTOR CH 1/10W 390	1	
R238	ERJ6GEYG223	M.RESISTOR CH 1/10W 22K	1	
R240	ERJ6GEYG182	M.RESISTOR CH 1/10W 1.8K	1	
R241	ERJ6GEYG273	M.RESISTOR CH 1/10W 27K	1	
R242	ERJ6GEYG470	M.RESISTOR CH 1/10W 47	1	
R243	ERJ6GEYG182	M.RESISTOR CH 1/10W 1.8K	1	
R244	VRE0034E151	M.RESISTOR CH 1/10W 150	1	
R245	ERJ6GEYG152	M.RESISTOR CH 1/10W 1.5K	1	
R246	ERJ6GEYG331	M.RESISTOR CH 1/10W 330	1	
R257	VRE0034E331	M.RESISTOR CH 1/10W 330	1	
R258-60	VRE0034E301	M.RESISTOR CH 1/10W 300	3	
R262,63	VRE0034E102	M.RESISTOR CH 1/10W 1K	2	
R264	VRE0034E821	M.RESISTOR CH 1/10W 820	1	
R265,66	VRE0034E102	M.RESISTOR CH 1/10W 1K	2	
R268	ERJ6GEY0R00	M.RESISTOR CH 1/10W 0	1	
R269	ERJ6GEYG272	M.RESISTOR CH 1/10W 2.7K	1	
R270	ERJ6GEYG471	M.RESISTOR CH 1/10W 470	1	
R271	ERJ6GEYG331	M.RESISTOR CH 1/10W 330	1	
R272	ERJ6GEYG152	M.RESISTOR CH 1/10W 1.5K	1	
R273	ERJ6GEYG102	M.RESISTOR CH 1/10W 1K	1	
R274	ERJ6GEYG101	M.RESISTOR CH 1/10W 100	1	
R275	ERJ6GEYG102	M.RESISTOR CH 1/10W 1K	1	
R276	ERJ6GEYG101	M.RESISTOR CH 1/10W 100	1	
R277	ERJ6GEYG152	M.RESISTOR CH 1/10W 1.5K	1	
R278	ERJ6GEYG471	M.RESISTOR CH 1/10W 470	1	
R279	ERJ6GEYG222	M.RESISTOR CH 1/10W 2.2K	1	
R280	ERJ6GEYG152	M.RESISTOR CH 1/10W 1.5K	1	
R281	ERJ6GEYG222	M.RESISTOR CH 1/10W 2.2K	1	
R282	ERJ6GEYG101	M.RESISTOR CH 1/10W 100	1	
R283	ERJ6GEYG272	M.RESISTOR CH 1/10W 2.7K	1	
R285,86	ERJ6GEYG103	M.RESISTOR CH 1/10W 10K	2	

Ref.No.	Part No.	Part Name & Description	Pcs	Remarks
R288	ERJ6GEYG102	M.RESISTOR CH 1/10W 1K	1	
R290	ERJ6GEYG470	M.RESISTOR CH 1/10W 47	1	
R291	ERJ6GEYG222	M.RESISTOR CH 1/10W 2.2K	1	
R292	ERJ6GEYG102	M.RESISTOR CH 1/10W 1K	1	
R293	ERJ6GEYG152	M.RESISTOR CH 1/10W 1.5K	1	
R294	ERJ6GEYG470	M.RESISTOR CH 1/10W 47	1	
R298	ERJ6GEYG470	M.RESISTOR CH 1/10W 47	1	
R299	ERJ6GEYG272	M.RESISTOR CH 1/10W 2.7K	1	
R300,01	VRE0034E102	M.RESISTOR CH 1/10W 1K	2	
R302	ERJ6GEY0R00	M.RESISTOR CH 1/10W 0	1	
R303	ERJ6GEYG272	M.RESISTOR CH 1/10W 2.7K	1	
R306	ERJ6GEYG683	M.RESISTOR CH 1/10W 68K	1	
R307	ERJ6GEYG821	M.RESISTOR CH 1/10W 820	1	
R308	ERJ6GEYG273	M.RESISTOR CH 1/10W 27K	1	
R309	ERJ6GEYG272	M.RESISTOR CH 1/10W 2.7K	1	
R310	ERJ6GEYG682	M.REISITOR CH 1/10W 6.8K	1	
R311	ERJ6GEYG272	M.RESISTOR CH 1/10W 2.7K	1	
R312	ERJ6GEYG222	M.RESISTOR CH 1/10W 2.2K	1	
R313	ERJ6GEYG101	M.RESISTOR CH 1/10W 100	1	
R314	ERJ6GEYG683	M.RESISTOR CH 1/10W 68K	1	
R316-18	VRE0034E301	M.RESISTOR CH 1/10W 300	3	
R320,21	VRE0034E102	M.RESISTOR CH 1/10W 1K	2	
R322	VRE0034E821	M.RESISTOR CH 1/10W 820	1	
R323,24	VRE0034E102	M.RESISTOR CH 1/10W 1K	2	
R326	ERJ6GEY0R00	M.RESISTOR CH 1/10W 0	1	
R327	ERJ6GEYG272	M.RESISTOR CH 1/10W 2.7K	1	
R328	ERJ6GEYG152	M.RESISTOR CH 1/10W 1.5K	1	
R329	ERJ6GEYG471	M.RESISTOR CH 1/10W 470	1	
R330	ERJ6GEYG331	M.RESISTOR CH 1/10W 330	1	
R331	ERJ6GEYG102	M.RESISTOR CH 1/10W 1K	1	
R332	ERJ6GEYG101	M.RESISTOR CH 1/10W 100	1	
R333	ERJ6GEYG102	M.RESISTOR CH 1/10W 1K	1	
R334	ERJ6GEYG101	M.RESISTOR CH 1/10W 100	1	
R335	ERJ6GEYG152	M.RESISTOR CH 1/10W 1.5K	1	
R336	ERJ6GEYG471	M.RESISTOR CH 1/10W 470	1	
R337	ERJ6GEYG222	M.RESISTOR CH 1/10W 2.2K	1	
R338,39	ERJ6GEYG152	M.RESISTOR CH 1/10W 1.5K	2	
R340	ERJ6GEYG101	M.RESISTOR CH 1/10W 100	1	
R341	ERJ6GEYG272	M.RESISTOR CH 1/10W 2.7K	1	
R342	ERJ6GEYG683	M.RESISTOR CH 1/10W 68K	1	
R344,45	ERJ6GEYG103	M.RESISTOR CH 1/10W 10K	2	
R346	ERJ6GEYG102	M.RESISTOR CH 1/10W 1K	1	
R347	ERJ6GEYG470	M.RESISTOR CH 1/10W 47	1	
R348	ERJ6GEYG222	M.RESISTOR CH 1/10W 2.2K	1	
R349	ERJ6GEYG470	M.RESISTOR CH 1/10W 47	1	
R350	ERJ6GEYG152	M.RESISTOR CH 1/10W 1.5K	1	
R351	ERJ6GEYG391	M.RESISTOR CH 1/10W 390	1	
R355	ERJ6GEYG470	M.RESISTOR CH 1/10W 47	1	
R356	ERJ6GEYG222	M.RESISTOR CH 1/10W 2.2K	1	
R357,58	VRE0034E102	M.RESISTOR CH 1/10W 1K	2	
R359	VRE0034E271	M.RESISTOR CH 1/10W 270	1	
R360	ERJ6GEYG272	M.RESISTOR CH 1/10W 2.7K	1	
R364	ERJ6GEYG391	M.RESISTOR CH 1/10W 390	1	
R365	ERJ6GEYG273	M.RESISTOR CH 1/10W 27K	1	
R366	ERJ6GEYG272	M.RESISTOR CH 1/10W 2.7K	1	
R367	ERJ6GEYG682	M.REISITOR CH 1/10W 6.8K	1	
R368	ERJ6GEYG272	M.RESISTOR CH 1/10W 2.7K	1	
R369	ERJ6GEYG222	M.RESISTOR CH 1/10W 2.2K	1	
R370	ERJ6GEYG101	M.RESISTOR CH 1/10W 100	1	
R371	ERJ6GEYG683	M.RESISTOR CH 1/10W 68K	1	
R372	ERJ6GEYG332	M.RESISTOR CH 1/10W 3.3K	1	
R373	ERJ6GEYG562	M.RESISTOR CH 1/10W 5.6K	1	
R374,75	ERJ6GEYG223	M.RESISTOR CH 1/10W 22K	2	
R376	ERJ6GEYG332	M.RESISTOR CH 1/10W 3.3K	1	
R396	ERJ6GEYG332	M.RESISTOR CH 1/10W 3.3K	1	
R397	ERJ6GEYG472	M.RESISTOR CH 1/10W 4.7K	1	
R398	ERJ6GEYG153	M.RESISTOR CH 1/10W 15K	1	
R399	ERJ6GEYG221	M.RESISTOR CH 1/10W 220	1	
R400	ERJ6GEYG472	M.RESISTOR CH 1/10W 4.7K	1	
R401,02	ERJ6GEYG102	M.RESISTOR CH 1/10W 1K	2	
R404	ERJ6GEYG102	M.RESISTOR CH 1/10W 1K	1	
R405,06	ERJ6GEYG221	M.RESISTOR CH 1/10W 220	2	
R409	VRE0034E391	M.RESISTOR CH 1/10W 390	1	
R410	ERJ6GEY0R00	M.RESISTOR CH 1/10W 0	1	
R411	ERJ6GEYG221	M.RESISTOR CH 1/10W 220	1	

Ref.No.	Part No.	Part Name & Description	Pcs	Remarks
R412	VRE0034E391	M.RESISTOR CH 1/10W 390	1	
R413-16	ERJ6GEYG223	M.RESISTOR CH 1/10W 22K	4	
R417	VRE0034E391	M.RESISTOR CH 1/10W 390	1	
R418	ERJ6GEYG151	M.RESISTOR CH 1/10W 150	1	
R421	ERJ6GEYG221	M.RESISTOR CH 1/10W 220	1	
R422	VRE0034E391	M.RESISTOR CH 1/10W 390	1	
R423	ERJ6GEY0R00	M.RESISTOR CH 1/10W 0	1	
R424	ERJ6GEYG101	M.RESISTOR CH 1/10W 100	1	
R425,26	ERJ6GEYG470	M.RESISTOR CH 1/10W 47	2	
R427	ERJ6GEYG221	M.RESISTOR CH 1/10W 220	1	
R428	VRE0034E391	M.RESISTOR CH 1/10W 390	1	
R429	ERJ6GEYG392	M.RESISTOR CH 1/10W 3.9K	1	
R430	ERJ6GEYG102	M.RESISTOR CH 1/10W 1K	1	
R431	VRE0034E821	M.RESISTOR CH 1/10W 820	1	
R432	ERJ6GEYG102	M.RESISTOR CH 1/10W 1K	1	
R433	ERJ6GEYG152	M.RESISTOR CH 1/10W 1.5K	1	
R434	ERJ6GEYG123	M.RESISTOR CH 1/10W 12K	1	
R435	ERJ6GEYG682	M.REISITOR CH 1/10W 6.8K	1	
R436	ERJ6GEYG822	M.RESISTOR CH 1/10W 8.2K	1	
R437	ERJ6GEYG123	M.RESISTOR CH 1/10W 12K	1	
R438	ERJ6GEYG152	M.RESISTOR CH 1/10W 1.5K	1	
R439	ERJ6GEYG102	M.RESISTOR CH 1/10W 1K	1	
R440	VRE0034E821	M.RESISTOR CH 1/10W 820	1	
R441	ERJ6GEYG102	M.RESISTOR CH 1/10W 1K	1	
R442	ERJ6GEYG222	M.RESISTOR CH 1/10W 2.2K	1	
R443	ERJ6GEY0R00	M.RESISTOR CH 1/10W 0	1	
R501	ERJ6GEYG102	M.RESISTOR CH 1/10W 1K	1	
R502	ERJ6GEYG330	M.RESISTOR CH 1/10W 33	1	
R503,04	ERJ6GEYG222	M.RESISTOR CH 1/10W 2.2K	2	
R505,06	ERJ6GEYG102	M.RESISTOR CH 1/10W 1K	2	
R507	ERJ6GEYG331	M.RESISTOR CH 1/10W 330	1	
R508	ERJ6GEYG221	M.RESISTOR CH 1/10W 220	1	
R509	ERJ6GEYG152	M.RESISTOR CH 1/10W 1.5K	1	
R510	ERJ6GEYG391	M.RESISTOR CH 1/10W 390	1	
R511	ERJ6GEYG102	M.RESISTOR CH 1/10W 1K	1	
R512	ERJ6GEYG152	M.RESISTOR CH 1/10W 1.5K	1	
R513	ERJ6GEYG683	M.RESISTOR CH 1/10W 68K	1	
R514	ERJ6GEYG182	M.RESISTOR CH 1/10W 1.8K	1	
R515	ERJ6GEYG101	M.RESISTOR CH 1/10W 100	1	
R516	ERJ6GEYG152	M.RESISTOR CH 1/10W 1.5K	1	
R517	ERJ6GEYG470	M.RESISTOR CH 1/10W 47	1	
R518	ERJ6GEYG273	M.RESISTOR CH 1/10W 27K	1	
R519	ERJ6GEYG331	M.RESISTOR CH 1/10W 330	1	
R520	ERJ6GEYG681	M.RESISTOR CH 1/10W 680	1	
R521	ERJ6GEYG391	M.RESISTOR CH 1/10W 390	1	
R522	ERJ6GEYG102	M.RESISTOR CH 1/10W 1K	1	
R523	ERJ6GEYG681	M.RESISTOR CH 1/10W 680	1	
R524	ERJ6GEYG561	M.RESISTOR CH 1/10W 560	1	
R525	ERJ6GEYG182	M.RESISTOR CH 1/10W 1.8K	1	
R526	ERJ6GEYG470	M.RESISTOR CH 1/10W 47	1	
R527	ERJ6GEYG182	M.RESISTOR CH 1/10W 1.8K	1	
R528	VRE0034E151	M.RESISTOR CH 1/10W 150	1	
R529	ERJ6GEYG152	M.RESISTOR CH 1/10W 1.5K	1	
R530	ERJ6GEYG470	M.RESISTOR CH 1/10W 47	1	
R542	ERJ6GEYG821	M.RESISTOR CH 1/10W 820	1	
R543	ERJ6GEYG392	M.RESISTOR CH 1/10W 3.9K	1	
R544	ERJ6GEYG561	M.RESISTOR CH 1/10W 560	1	
R545	ERJ6GEYG391	M.RESISTOR CH 1/10W 390	1	
R546	ERJ6GEYG561	M.RESISTOR CH 1/10W 560	1	
R547	ERJ6GEYG391	M.RESISTOR CH 1/10W 390	1	
R549	ERJ6GEYG273	M.RESISTOR CH 1/10W 27K	1	
R551	ERJ6GEYG391	M.RESISTOR CH 1/10W 390	1	
R552	ERJ6GEYG102	M.RESISTOR CH 1/10W 1K	1	
R553	ERJ6GEYG681	M.RESISTOR CH 1/10W 680	1	
R554	ERJ6GEYG561	M.RESISTOR CH 1/10W 560	1	
R555	ERJ6GEYG182	M.RESISTOR CH 1/10W 1.8K	1	
R556	ERJ6GEYG470	M.RESISTOR CH 1/10W 47	1	
R557	ERJ6GEYG182	M.RESISTOR CH 1/10W 1.8K	1	
R558	VRE0034E151	M.RESISTOR CH 1/10W 150	1	
R559	ERJ6GEYG152	M.RESISTOR CH 1/10W 1.5K	1	
R560	ERJ6GEYG470	M.RESISTOR CH 1/10W 47	1	
R564	ERJ6GEYG102	M.RESISTOR CH 1/10W 1K	1	
R565	ERJ6GEYG222	M.RESISTOR CH 1/10W 2.2K	1	
R566	ERJ6GEYG182	M.RESISTOR CH 1/10W 1.8K	1	
R567	ERJ6GEYG221	M.RESISTOR CH 1/10W 220	1	

Ref.No.		Part No.	Part Name & Description	Pcs	Remarks
R568		ERJ6GEYG470	M.RESISTOR CH 1/10W 47	1	
R569		ERJ6GEYG153	M.RESISTOR CH 1/10W 15K	1	
R570		ERJ6GEYG223	M.RESISTOR CH 1/10W 22K	1	
R571		ERJ6GEYG470	M.RESISTOR CH 1/10W 47	1	
R572		ERJ6GEYG472	M.RESISTOR CH 1/10W 4.7K	1	
R573,74		ERJ6GEYG102	M.RESISTOR CH 1/10W 1K	2	
R576		ERJ6GEYG103	M.RESISTOR CH 1/10W 10K	1	
R577		ERJ6GEYG102	M.RESISTOR CH 1/10W 1K	1	
R578		ERJ6GEYG472	M.RESISTOR CH 1/10W 4.7K	1	
R579,80		ERJ6GEYG121	M.RESISTOR CH 1/10W 120	2	
R581,82		ERJ6GEYG821	M.RESISTOR CH 1/10W 820	2	
R583		ERJ6GEYG470	M.RESISTOR CH 1/10W 47	1	
R584		ERJ6GEYG153	M.RESISTOR CH 1/10W 15K	1	
R585		ERJ6GEYG223	M.RESISTOR CH 1/10W 22K	1	
R586		ERJ6GEYG470	M.RESISTOR CH 1/10W 47	1	
R587		ERJ6GEYG472	M.RESISTOR CH 1/10W 4.7K	1	
R588		ERJ6GEYG102	M.RESISTOR CH 1/10W 1K	1	
R590		ERJ6GEYG103	M.RESISTOR CH 1/10W 10K	1	
R591		ERJ6GEYG102	M.RESISTOR CH 1/10W 1K	1	
R592		ERJ6GEYG472	M.RESISTOR CH 1/10W 4.7K	1	
R593,94		ERJ6GEYG121	M.RESISTOR CH 1/10W 120	2	
R595,96		ERJ6GEYG821	M.RESISTOR CH 1/10W 820	2	
R597		ERJ6GEYG102	M.RESISTOR CH 1/10W 1K	1	
R598		ERJ6GEYG103	M.RESISTOR CH 1/10W 10K	1	
R599		ERJ6GEYG822	M.RESISTOR CH 1/10W 8.2K	1	
R600		ERJ6GEYG102	M.RESISTOR CH 1/10W 1K	1	
R601,02		VRE0034E301	M.RESISTOR CH 1/10W 300	2	
R603		ERJ6GEYG152	M.RESISTOR CH 1/10W 1.5K	1	
R604		ERJ6GEYG151	M.RESISTOR CH 1/10W 150	1	
R605		ERJ6GEYG102	M.RESISTOR CH 1/10W 1K	1	
R606		ERJ6GEYG182	M.RESISTOR CH 1/10W 1.8K	1	
R607		ERJ6GEYG332	M.RESISTOR CH 1/10W 3.3K	1	
R608		ERJ6GEYG470	M.RESISTOR CH 1/10W 47	1	
R609,10		ERJ6GEYG122	M.RESISTOR CH 1/10W 1.2K	2	
R611		ERJ6GEY0R00	M.RESISTOR CH 1/10W 0	1	
R612		ERJ6GEYG272	M.RESISTOR CH 1/10W 2.7K	1	
R613		ERJ6GEYG182	M.RESISTOR CH 1/10W 1.8K	1	
R614		ERJ6GEYG392	M.RESISTOR CH 1/10W 3.9K	1	
R615		ERJ6GEYG151	M.RESISTOR CH 1/10W 150	1	
R616		ERJ6GEYG222	M.RESISTOR CH 1/10W 2.2K	1	
R617		ERJ6GEYG330	M.RESISTOR CH 1/10W 33	1	
R618		ERJ6GEYG222	M.RESISTOR CH 1/10W 2.2K	1	
R619		ERJ6GEYG102	M.RESISTOR CH 1/10W 1K	1	
R620		ERJ6GEYG181	M.RESISTOR CH 1/10W 180	1	
R621		ERJ6GEYG821	M.RESISTOR CH 1/10W 820	1	
R622		ERJ6GEYG152	M.RESISTOR CH 1/10W 1.5K	1	
R623		ERJ6GEYG470	M.RESISTOR CH 1/10W 47	1	
R630		ERJ6GEYG272	M.RESISTOR CH 1/10W 2.7K	1	
R633		ERJ6GEY0R00	M.RESISTOR CH 1/10W 0	1	
R634		ERJ6GEYG683	M.RESISTOR CH 1/10W 68K	1	
R635		ERJ6GEYG104	M.RESISTOR CH 1/10W 100K	1	
R636		ERJ6GEYG562	M.RESISTOR CH 1/10W 5.6K	1	
R637		ERJ6GEYG183	M.RESISTOR CH 1/10W 18K	1	
R642		ERJ6GEYG332	M.RESISTOR CH 1/10W 3.3K	1	
R643		ERJ6GEYG822	M.RESISTOR CH 1/10W 8.2K	1	
R644		ERJ6GEYG133	M.RESISTOR CH 1/10W 13K	1	
R645		ERJ6GEYG182	M.RESISTOR CH 1/10W 1.8K	1	
R646		ERJ6GEYG681	M.RESISTOR CH 1/10W 680	1	
R647		ERJ6GEYG471	M.RESISTOR CH 1/10W 470	1	
R648,49		ERJ6GEYG473	M.RESISTOR CH 1/10W 47K	2	
R650		ERJ6GEYG221	M.RESISTOR CH 1/10W 220	1	
R651		ERJ6GEYG682	M.REISITOR CH 1/10W 6.8K	1	
R652		ERJ6GEYG182	M.RESISTOR CH 1/10W 1.8K	1	
R653		ERJ6GEYG122	M.RESISTOR CH 1/10W 1.2K	1	
R654,55		ERJ6GEYG101	M.RESISTOR CH 1/10W 100	2	
R656		ERJ6GEYG122	M.RESISTOR CH 1/10W 1.2K	1	
R657		ERJ6GEYG182	M.RESISTOR CH 1/10W 1.8K	1	
R658		ERJ6GEYG102	M.RESISTOR CH 1/10W 1K	1	
R659		ERJ6GEYG681	M.RESISTOR CH 1/10W 680	1	
R660		ERJ6GEYG102	M.RESISTOR CH 1/10W 1K	1	
R661		ERJ6GEYG222	M.RESISTOR CH 1/10W 2.2K	1	
R662		ERJ6GEYG182	M.RESISTOR CH 1/10W 1.8K	1	
R663		ERJ6GEYG222	M.RESISTOR CH 1/10W 2.2K	1	
R664		ERJ6GEYG682	M.REISITOR CH 1/10W 6.8K	1	
R665		ERJ6GEYG122	M.RESISTOR CH 1/10W 1.2K	1	

Ref.No.		Part No.	Part Name & Description	Pcs	Remarks
R666		ERJ6GEYG102	M.RESISTOR CH 1/10W 1K	1	
R667		ERJ6GEYG182	M.RESISTOR CH 1/10W 1.8K	1	
R668		ERJ6GEYG102	M.RESISTOR CH 1/10W 1K	1	
R669		ERJ6GEYG681	M.RESISTOR CH 1/10W 680	1	
R670		ERJ6GEYG331	M.RESISTOR CH 1/10W 330	1	
R671		ERJ6GEYG152	M.RESISTOR CH 1/10W 1.5K	1	
R672,73		ERJ6GEYG102	M.RESISTOR CH 1/10W 1K	2	
R674		ERJ6GEYG561	M.RESISTOR CH 1/10W 560	1	
R675		ERJ6GEY0R00	M.RESISTOR CH 1/10W 0	1	
R676		ERJ6GEYG152	M.RESISTOR CH 1/10W 1.5K	1	
R677		ERJ6GEYG102	M.RESISTOR CH 1/10W 1K	1	
R678		ERJ6GEYG152	M.RESISTOR CH 1/10W 1.5K	1	
R679		ERJ6GEYG102	M.RESISTOR CH 1/10W 1K	1	
R680		ERJ6GEYG561	M.RESISTOR CH 1/10W 560	1	
R681		ERJ6GEYG330	M.RESISTOR CH 1/10W 33	1	
R682		ERJ6GEYG681	M.RESISTOR CH 1/10W 680	1	
R683		ERJ6GEYG124	M.RESISTOR CH 1/10W 120K	1	
R684		ERJ6GEYG152	M.RESISTOR CH 1/10W 1.5K	1	
R685		ERJ6GEYG102	M.RESISTOR CH 1/10W 1K	1	
R686		ERJ6GEYG181	M.RESISTOR CH 1/10W 180	1	
R687		ERJ6GEYG102	M.RESISTOR CH 1/10W 1K	1	
R688		ERJ6GEYG561	M.RESISTOR CH 1/10W 560	1	
R689		ERJ6GEYG152	M.RESISTOR CH 1/10W 1.5K	1	
R690,91		ERJ6GEYG122	M.RESISTOR CH 1/10W 1.2K	2	
R692,93		ERJ6GEYG470	M.RESISTOR CH 1/10W 47	2	
R694,95		ERJ6GEYG102	M.RESISTOR CH 1/10W 1K	2	
R696,97		ERJ6GEYG122	M.RESISTOR CH 1/10W 1.2K	2	
R698,99		ERJ6GEYG470	M.RESISTOR CH 1/10W 47	2	
R700,01		ERJ6GEYG102	M.RESISTOR CH 1/10W 1K	2	
R702		ERJ6GEYG103	M.RESISTOR CH 1/10W 10K	1	
R703		ERJ6GEYG472	M.RESISTOR CH 1/10W 4.7K	1	
R704-07		ERJ6GEYG102	M.RESISTOR CH 1/10W 1K	4	
R709		ERJ6GEY0R00	M.RESISTOR CH 1/10W 0	1	
R711		ERJ6GEY0R00	M.RESISTOR CH 1/10W 0	1	
R714,15		ERJ6GEY0R00	M.RESISTOR CH 1/10W 0	2	
R716		ERJ6GEYG101	M.RESISTOR CH 1/10W 100	1	
R717		ERJ6GEYG122	M.RESISTOR CH 1/10W 1.2K	1	
R718		ERJ6GEYG154	M.RESISTOR CH 1/10W 150K	1	
R719		ERJ6GEYG102	M.RESISTOR CH 1/10W 1K	1	
R720		ERJ6GEYG681	M.RESISTOR CH 1/10W 680	1	
R721		ERJ6GEYG470	M.RESISTOR CH 1/10W 47	1	
R722		ERJ6GEYG182	M.RESISTOR CH 1/10W 1.8K	1	
R723		VRE0034E151	M.RESISTOR CH 1/10W 150	1	
R724		ERJ6GEYG152	M.RESISTOR CH 1/10W 1.5K	1	
R725		ERJ6GEYG470	M.RESISTOR CH 1/10W 47	1	
R726		ERJ6GEYG472	M.RESISTOR CH 1/10W 4.7K	1	
R727		ERJ6GEYG103	M.RESISTOR CH 1/10W 10K	1	
R728		ERJ6GEYG561	M.RESISTOR CH 1/10W 560	1	
R729		ERJ6GEYG391	M.RESISTOR CH 1/10W 390	1	
R730		ERJ6GEYG561	M.RESISTOR CH 1/10W 560	1	
R731		ERJ6GEYG391	M.RESISTOR CH 1/10W 390	1	
R732		ERJ6GEYG561	M.RESISTOR CH 1/10W 560	1	
R733		ERJ6GEYG391	M.RESISTOR CH 1/10W 390	1	
R734		ERJ6GEYG561	M.RESISTOR CH 1/10W 560	1	
R735		ERJ6GEYG391	M.RESISTOR CH 1/10W 390	1	
R736		ERJ6GEYG101	M.RESISTOR CH 1/10W 100	1	
R737		ERJ6GEYG122	M.RESISTOR CH 1/10W 1.2K	1	
R739,40		ERJ6GEYG152	M.RESISTOR CH 1/10W 1.5K	2	
R741		ERJ6GEYG105	M.RESISTOR CH 1/10W 1M	1	
R742		ERJ6GEYG122	M.RESISTOR CH 1/10W 1.2K	1	
R743		ERJ6GEYG472	M.RESISTOR CH 1/10W 4.7K	1	
R744		ERJ6GEY0R00	M.RESISTOR CH 1/10W 0	1	
R800		ERJ6GEYG223	M.RESISTOR CH 1/10W 22K	1	
R801		ERJ6GEYG562	M.RESISTOR CH 1/10W 5.6K	1	
R802		ERJ6GEYG331	M.RESISTOR CH 1/10W 330	1	
R803		ERJ6GEYG103	M.RESISTOR CH 1/10W 10K	1	
R804		ERJ6GEYG183	M.RESISTOR CH 1/10W 18K	1	
R805		ERJ6GEYG102	M.RESISTOR CH 1/10W 1K	1	
R806		ERJ6GEYG472	M.RESISTOR CH 1/10W 4.7K	1	
R807		ERJ6GEYG152	M.RESISTOR CH 1/10W 1.5K	1	
R808-10		ERJ6GEYG122	M.RESISTOR CH 1/10W 1.2K	3	
R811		ERJ6GEYG222	M.RESISTOR CH 1/10W 2.2K	1	
R812-14		ERJ6GEYG122	M.RESISTOR CH 1/10W 1.2K	3	
R815		ERJ6GEYG222	M.RESISTOR CH 1/10W 2.2K	1	
R816		ERJ6GEYG122	M.RESISTOR CH 1/10W 1.2K	1	

Ref.No.	Part No.	Part Name & Description	Pcs	Remarks
R817	ERJ6GEYG392	M.RESISTOR CH 1/10W 3.9K	1	
R819,20	ERJ6GEYG103	M.RESISTOR CH 1/10W 10K	2	
R821	ERJ6GEYG392	M.RESISTOR CH 1/10W 3.9K	1	
R822,23	ERJ6GEYG103	M.RESISTOR CH 1/10W 10K	2	
R826	ERJ6GEYG153	M.RESISTOR CH 1/10W 15K	1	
R827	ERJ6GEYG392	M.RESISTOR CH 1/10W 3.9K	1	
R828	ERJ6GEYG562	M.RESISTOR CH 1/10W 5.6K	1	
R829	ERJ6GEYG103	M.RESISTOR CH 1/10W 10K	1	
R830	ERJ6GEYG122	M.RESISTOR CH 1/10W 1.2K	1	
R831	ERJ6GEYG222	M.RESISTOR CH 1/10W 2.2K	1	
R832	ERJ6GEYG392	M.RESISTOR CH 1/10W 3.9K	1	
R833	ERJ6GEYG122	M.RESISTOR CH 1/10W 1.2K	1	
R834	ERJ6GEYG182	M.RESISTOR CH 1/10W 1.8K	1	
R835	ERJ6GEYG392	M.RESISTOR CH 1/10W 3.9K	1	
R836	ERJ6GEYG682	M.REISITOR CH 1/10W 6.8K	1	
R837	ERJ6GEYG392	M.RESISTOR CH 1/10W 3.9K	1	
R838	ERJ6GEYG682	M.REISITOR CH 1/10W 6.8K	1	
R839,40	ERJ6GEYG392	M.RESISTOR CH 1/10W 3.9K	2	
R841	ERJ6GEYG682	M.REISITOR CH 1/10W 6.8K	1	
R842	ERJ6GEYG392	M.RESISTOR CH 1/10W 3.9K	1	
R843	ERJ6GEYG682	M.REISITOR CH 1/10W 6.8K	1	
R844-46	ERJ6GEYG392	M.RESISTOR CH 1/10W 3.9K	3	
R847	ERJ6GEY0R00	M.RESISTOR CH 1/10W 0	1	
R848	ERJ6GEYG102	M.RESISTOR CH 1/10W 1K	1	
R849	ERJ6GEY0R00	M.RESISTOR CH 1/10W 0	1	
R850	ERJ6GEYG102	M.RESISTOR CH 1/10W 1K	1	
R851	ERJ6GEY0R00	M.RESISTOR CH 1/10W 0	1	
R852	ERJ6GEYG102	M.RESISTOR CH 1/10W 1K	1	
R853	ERJ6GEY0R00	M.RESISTOR CH 1/10W 0	1	
R854	ERJ6GEYG102	M.RESISTOR CH 1/10W 1K	1	
R855	ERJ6GEY0R00	M.RESISTOR CH 1/10W 0	1	
R856	ERJ6GEYG102	M.RESISTOR CH 1/10W 1K	1	
R857	ERJ6GEY0R00	M.RESISTOR CH 1/10W 0	1	
R858	ERJ6GEYG102	M.RESISTOR CH 1/10W 1K	1	
R859-62	ERJ6GEY0R00	M.RESISTOR CH 1/10W 0	4	
R867	ERJ6GEYG104	M.RESISTOR CH 1/10W 100K	1	
R868	ERJ6GEYG562	M.RESISTOR CH 1/10W 5.6K	1	
R869	ERJ6GEYG273	M.RESISTOR CH 1/10W 27K	1	
R870	ERJ6GEYG472	M.RESISTOR CH 1/10W 4.7K	1	
R871	ERJ6GEYG562	M.RESISTOR CH 1/10W 5.6K	1	
R872	ERJ6GEYG273	M.RESISTOR CH 1/10W 27K	1	
R873	ERJ6GEY0R00	M.RESISTOR CH 1/10W 0	1	
R876	ERJ6GEY0R00	M.RESISTOR CH 1/10W 0	1	
R878	ERJ6GEY0R00	M.RESISTOR CH 1/10W 0	1	
R880	ERJ6GEY0R00	M.RESISTOR CH 1/10W 0	1	
R882	ERJ6GEY0R00	M.RESISTOR CH 1/10W 0	1	
R883,84	ERJ6GEYG103	M.RESISTOR CH 1/10W 10K	2	
R886,87	ERJ6GEY0R00	M.RESISTOR CH 1/10W 0	2	
R889,90	ERJ6GEYG392	M.RESISTOR CH 1/10W 3.9K	2	
R891	ERJ6GEYG563	M.RESISTOR CH 1/10W 56K	1	
R892	ERJ6GEYG472	M.RESISTOR CH 1/10W 4.7K	1	
R893	ERJ6GEYG272	M.RESISTOR CH 1/10W 2.7K	1	
R894	ERJ6GEYG102	M.RESISTOR CH 1/10W 1K	1	
R895	ERJ6GEYG103	M.RESISTOR CH 1/10W 10K	1	
R896	ERJ6GEYG122	M.RESISTOR CH 1/10W 1.2K	1	
R897	ERJ6GEYG222	M.RESISTOR CH 1/10W 2.2K	1	
R898,99	ERJ6GEYG273	M.RESISTOR CH 1/10W 27K	2	
R900	ERJ6GEYG332	M.RESISTOR CH 1/10W 3.3K	1	
R901-05	ERJ6GEYG103	M.RESISTOR CH 1/10W 10K	5	
R906	ERJ6GEYG224	M.RESISTOR CH 1/10W 220K	1	
R907-09	ERJ6GEYG103	M.RESISTOR CH 1/10W 10K	3	
R910	ERJ6GEYG152	M.RESISTOR CH 1/10W 1.5K	1	
R911	ERJ6GEYG392	M.RESISTOR CH 1/10W 3.9K	1	
R912-16	ERJ6GEYG103	M.RESISTOR CH 1/10W 10K	5	
R917	ERJ6GEYG562	M.RESISTOR CH 1/10W 5.6K	1	
R925,26	ERJ6GEYG122	M.RESISTOR CH 1/10W 1.2K	2	
R928	ERJ6GEYG562	M.RESISTOR CH 1/10W 5.6K	1	
R929,30	ERJ6GEYG392	M.RESISTOR CH 1/10W 3.9K	2	
R1001	ERJ6GEYG681	M.RESISTOR CH 1/10W 680	1	
R1002	ERJ6GEYG621	M.RESISTOR CH 1/10W 620	1	
SW201	VSS0207	SWITCH	1	
SW202,03	VJP1990	CONNECTOR	2	

Ref.No.	Part No.	Part Name & Description	Pcs	Remarks
SW800	VSS0126	SWITCH	1	
SW801	VJP1990	CONNECTOR	1	
SWS801	VJS1990	CONNECTOR	1	
TH501-04	ERTD2FGL102S	THERMISTOR 1K	4	
TP1-P4	VJR0646	TEST POINT	4	
TP6,P7	VJR0646	TEST POINT	2	
TP201-04	VJR0646	TEST POINT	4	
TP206	VJR0646	TEST POINT	1	
TP501-03	VJR0646	TEST POINT	3	
TP505-07	VJR0646	TEST POINT	3	
TP800-03	VJR0646	TEST POINT	4	
TP805	VJR0646	TEST POINT	1	
TPG1,G2	VJR0646	TEST POINT	2	
TPG201	VJR0646	TEST POINT	1	
TPG501	VJR0646	TEST POINT	1	
VC201	ECV1ZW20X60	V.CAPACITOR 20P	1	
VC501	ECV1ZW30X53	V.CAPACITOR 30P	1	
VR1	VRV0109B201	V.RESISTOR 200	1	
VR2	VRV0109B502	V.RESISTOR 5K	1	
VR3	VRV0109B501	V.RESISTOR 500	1	
VR4	VRV0109B502	V.RESISTOR 5K	1	
VR200	VRV0064B501	V.RESISTOR 500	1	
VR201	VRV0064B503	V.RESISTOR 50K	1	
VR202	VRV0064B103	V.RESISTOR 10K	1	
VR203	VRV0109B501	V.RESISTOR 500	1	
VR204	VRV0109B503	V.RESISTOR 50K	1	
VR205	VRV0109B501	V.RESISTOR 500	1	
VR206	VRV0109B503	V.RESISTOR 50K	1	
VR207	VRV0109B102	V.RESISTOR 1K	1	
VR208,09	VRV0109B501	V.RESISTOR 500	2	
VR210-13	VRV0109B102	V.RESISTOR 1K	4	
VR501	VRV0109B501	V.RESISTOR 500	1	
VR502	VRV0109B503	V.RESISTOR 50K	1	
VR503-06	VRV0064B503	V.RESISTOR 50K	4	
VR507	VRV0109B201	V.RESISTOR 200	1	
VR508	VRV0109B101	V.RESISTOR 100	1	
VR509	VRV0109B201	V.RESISTOR 200	1	
VR510	VRV0109B203	V.RESISTOR 20K	1	
VR511	VRV0109B502	V.RESISTOR 5K	1	
VR512	VRV0064B503	V.RESISTOR 50K	1	
VR513,14	VRV0109B102	V.RESISTOR 1K	2	
VR515,16	VRV0109B501	V.RESISTOR 500	2	
VR517	VRV0064B503	V.RESISTOR 50K	1	
VR800,01	VRV0109B202	V.RESISTOR 2K	1	
VR802,03	VRV0109B203	V.RESISTOR 20K	2	
		MISCELLANEOUS		
	VML2143	CARD PULLER	1	
	VML2144	CARD PULLER	1	
	VMZ1547	BARRIER	1	
	VXA3966	P.C.B. SHIELD	1	
	XNG26E	NUT	4	
	XYNV3+K6FR	SCREW	5	
	XYN26+C12	SCREW	4	

Ref.No.		Part No.	Part Name & Description	Pcs	Remarks
	■	VEP88063Q	P.C.BOARD W/COMPONENT		FOR AU-62H
			W2 ENCODER		
	■	VEP80632A	P.C.BOARD W/COMPONENT		FOR VEP88063Q
			W2 SUB		
			CAPACITORS		
C1		ECUM1H103KBN	C.CAPACITOR CH 50V 0.01U	1	
C2		ECEA1CU221	E.CAPACITOR 16V 220U	1	
C3		ECUM1H103KBN	C.CAPACITOR CH 50V 0.01U	1	
C4		ECEA0JU101	E.CAPACITOR 6.3V 100U	1	
C5		ECUM1H103KBN	C.CAPACITOR CH 50V 0.01U	1	
C6		ECEA1CU221	E.CAPACITOR 16V 220U	1	
C7-C9		ECUM1H103KBN	C.CAPACITOR CH 50V 0.01U	3	
C10		ECUM1H103KBN	C.CAPACITOR CH 50V 0.01U	1	
C11		ECEA1AU101	E.CAPACITOR 10V 100U	1	
C12,13		ECUM1H103KBN	C.CAPACITOR CH 50V 0.01U	2	
C14		ECEA1AU101	E.CAPACITOR 10V 100U	1	
C15		ECUM1H470JCN	C.CAPACITOR CH 50V 47P	1	
C16		ECUM1H103KBN	C.CAPACITOR CH 50V 0.01U	1	
C17		ECUM1H120JCN	C.CAPACITOR CH 50V 12P	1	
C18		ECUM1H103KBN	C.CAPACITOR CH 50V 0.01U	1	
C19,20		ECEA1CU221	E.CAPACITOR 16V 220U	2	
C21,22		ECUM1H103KBN	C.CAPACITOR CH 50V 0.01U	2	
C23		ECUM1H470JCN	C.CAPACITOR CH 50V 47P	1	
C24,25		ECUM1H151JCN	C.CAPACITOR CH 50V 150P	1	
C26		ECUM1E104ZFN	C.CAPACITOR CH 25V 0.1U	1	
C27		ECUM1H270JCN	C.CAPACITOR CH 50V 27P	1	
C28		ECQM1H183JF	P.CAPACITOR 50V 0.018U	1	
C29		ECUM1H103KBN	C.CAPACITOR CH 50V 0.01U	1	
C30		ECEA1EN4R7S	E.CAPACITOR 25V 4.7U	1	
C31		ECEA1HN2R2S	E.CAPACITOR 50V 2.2U	1	
C32		ECUM1H103KBN	C.CAPACITOR CH 50V 0.01U	1	
C33		ECEA0JU101	E.CAPACITOR 6.3V 100U	1	
C35		ECEA0JU221	E.CAPACITOR 6.3V 220U	1	
C36		ECUM1H103KBN	C.CAPACITOR CH 50V 0.01U	1	
C37		ECEA0JU221	E.CAPACITOR 6.3V 220U	1	
C38-46		ECUM1H103KBN	C.CAPACITOR CH 50V 0.01U	9	
C49,50		ECUM1H103KBN	C.CAPACITOR CH 50V 0.01U	2	
C51		ECEA1AU101	E.CAPACITOR 10V 100U	1	
C52		ECUM1E104ZFN	C.CAPACITOR CH 25V 0.1U	1	
C53		ECUM1H103KBN	C.CAPACITOR CH 50V 0.01U	1	
C54		ECEA1AU101	E.CAPACITOR 10V 100U	1	
C55		ECUM1H220JCN	C.CAPACITOR CH 50V 22P	1	
C56		ECUM1H103KBN	C.CAPACITOR CH 50V 0.01U	1	
C57		ECUM1H150JCN	C.CAPACITOR CH 50V 15P	1	
C58		ECUM1H103KBN	C.CAPACITOR CH 50V 0.01U	1	
C59		ECEA0JU101	E.CAPACITOR 6.3V 100U	1	
C60		ECUM1H120JCN	C.CAPACITOR CH 50V 12P	1	
C61		ECEA0JU221	E.CAPACITOR 6.3V 220U	1	
C62		ECUM1H103KBN	C.CAPACITOR CH 50V 0.01U	1	
C63		ECEA0JU221	E.CAPACITOR 6.3V 220U	1	
C64-73		ECUM1H103KBN	C.CAPACITOR CH 50V 0.01U	10	
C76		ECUM1H270JCN	C.CAPACITOR CH 50V 27P	1	
C77		ECUM1E104ZFN	C.CAPACITOR CH 25V 0.1U	1	
C78		ECQM1H223JF	P.CAPACITOR 50V 0.022U	1	
C79		ECUM1H103KBN	C.CAPACITOR CH 50V 0.01U	1	
C80,81		ECEA1HN2R2S	E.CAPACITOR 50V 2.2U	2	
C82,83		ECUM1E104ZFN	C.CAPACITOR CH 25V 0.1U	2	
C84		ECEA0JU470	E.CAPACITOR 6.3V 47U	1	
C85,86		ECUM1E104ZFN	C.CAPACITOR CH 25V 0.1U	2	
C87		ECUM1H103KBN	C.CAPACITOR CH 50V 0.01U	1	
C88		ECUM1E104ZFN	C.CAPACITOR CH 25V 0.1U	1	
C89		ECKF1H103ZF	C.CAPACITOR 50V 0.01U	1	
C113		ECUM1E104ZFN	C.CAPACITOR CH 25V 0.1U	1	
C114-17		ECUM1H103KBN	C.CAPACITOR CH 50V 0.01U	4	
C120		ECUM1H103KBN	C.CAPACITOR CH 50V 0.01U	1	
C121		ECEA1AU470	E.CAPACITOR 10V 47U	1	
C122		ECUM1H103KBN	C.CAPACITOR CH 50V 0.01U	1	
C123		ECUM1C104KBN	C.CAPACITOR CH 16V 0.1U	1	
C124		ECUM1H181JCN	C.CAPACITOR CH 50V 180P	1	

Ref.No.		Part No.	Part Name & Description	Pcs	Remarks
C125		ECUM1E104ZFN	C.CAPACITOR CH 25V 0.1U	1	
C126		ECUM1C104KBN	C.CAPACITOR CH 16V 0.1U	1	
C127		ECUM1H180JCN	C.CAPACITOR CH 50V 18P	1	
C128		ECUM1H680JCN	C.CAPACITOR CH 50V 68P	1	
C129,30		ECUM1C104KBN	C.CAPACITOR CH 16V 0.1U	2	
C131		ECEA1HN010S	E.CAPACITOR 50V 1U	1	
C132		ECUM1H103KBN	C.CAPACITOR CH 50V 0.01U	1	
C133		ECEA1AU470	E.CAPACITOR 10V 47U	1	
C134		ECUM1E104ZFN	C.CAPACITOR CH 25V 0.1U	1	
C135		ECUM1H391JCN	C.CAPACITOR CH 50V 390P	1	
C136		ECUM1H151JCN	C.CAPACITOR CH 50V 150P	1	
C137		ECUM1H121JCN	C.CAPACITOR CH 50V 120P	1	
C138		ECUM1H391JCN	C.CAPACITOR CH 50V 390P	1	
C139-41		ECUM1H103KBN	C.CAPACITOR CH 50V 0.01U	3	
C142		ECEA1AU470	E.CAPACITOR 10V 47U	1	
C143,44		ECUM1C104KBN	C.CAPACITOR CH 16V 0.1U	2	
C145		ECUM1H121JCN	C.CAPACITOR CH 50V 120P	1	
C146		ECUM1E104ZFN	C.CAPACITOR CH 25V 0.1U	1	
C147-49		ECUM1C104KBN	C.CAPACITOR CH 16V 0.1U	3	
C150		ECEA1HN010S	E.CAPACITOR 50V 1U	1	
C151		ECUM1H103KBN	C.CAPACITOR CH 50V 0.01U	1	
C152		ECEA1AU470	E.CAPACITOR 10V 47U	1	
C154		ECUM1E104ZFN	C.CAPACITOR CH 25V 0.1U	1	
C155		ECUM1H391JCN	C.CAPACITOR CH 50V 390P	1	
C156		ECUM1H151JCN	C.CAPACITOR CH 50V 150P	1	
C157		ECUM1H121JCN	C.CAPACITOR CH 50V 120P	1	
C158		ECUM1H391JCN	C.CAPACITOR CH 50V 390P	1	
C159,60		ECUM1H821JCN	C.CAPACITOR CH 50V 820P	2	
C161,62		ECEA1AN470S	E.CAPACITOR 10V 47U	2	
C163		ECEA1CU470	E.CAPACITOR 16V 47U	1	
C164		ECQM1H104JF	P.CAPACITOR 50V 0.1U	1	
C165		ECEA1AN470S	E.CAPACITOR 10V 47U	1	
C166		ECUM1H221JCN	C.CAPACITOR CH 50V 220P	1	
C200		ECUM1H103KBN	C.CAPACITOR CH 50V 0.01U	1	
C201		ECEA1AU101	E.CAPACITOR 10V 100U	1	
C202,03		ECUM1H103KBN	C.CAPACITOR CH 50V 0.01U	2	
C204		ECEA1AU101	E.CAPACITOR 10V 100U	1	
C205		ECUM1H103KBN	C.CAPACITOR CH 50V 0.01U	1	
C206		ECUM1H150JCN	C.CAPACITOR CH 50V 15P	1	
C207		ECUM1H470JCN	C.CAPACITOR CH 50V 47P	1	
C209		ECUM1H220JCN	C.CAPACITOR CH 50V 22P	1	
C210		ECUM1H100DCN	C.CAPACITOR CH 50V 10P	1	
C211		ECUM1C104KBN	C.CAPACITOR CH 16V 0.1U	1	
C212		ECUM1E104ZFN	C.CAPACITOR CH 25V 0.1U	1	
C213		ECUM1H221JCN	C.CAPACITOR CH 50V 220P	1	
C214		ECUM1H270JCN	C.CAPACITOR CH 50V 27P	1	
C215		ECUM1H103KBN	C.CAPACITOR CH 50V 0.01U	1	
C219		ECUM1H560JCN	C.CAPACITOR CH 50V 56P	1	
C220		ECUM1E104ZFN	C.CAPACITOR CH 25V 0.1U	1	
C223		ECUM1H221JCN	C.CAPACITOR CH 50V 220P	1	
C224		ECUM1H030DCN	C.CAPACITOR CH 50V 3P	1	
C226		ECEA1HNR47S	E.CAPACITOR 50V 0.47U	1	
C227,28		ECUM1H103KBN	C.CAPACITOR CH 50V 0.01U	2	
C229		ECEA1AU101	E.CAPACITOR 10V 100U	1	
C230,31		ECUM1H103KBN	C.CAPACITOR CH 50V 0.01U	2	
C232		ECEA1AU101	E.CAPACITOR 10V 100U	1	
C233		ECUM1H103KBN	C.CAPACITOR CH 50V 0.01U	1	
C235		ECUM1H120JCN	C.CAPACITOR CH 50V 12P	1	
C236		ECUM1H560JCN	C.CAPACITOR CH 50V 56P	1	
C238		ECUM1H100DCN	C.CAPACITOR CH 50V 10P	1	
C239		ECUM1H680JCN	C.CAPACITOR CH 50V 68P	1	
C240		ECUM1H330JCN	C.CAPACITOR CH 50V 33P	1	
C241		ECUM1H100DCN	C.CAPACITOR CH 50V 10P	1	
C242		ECEA1HNR47S	E.CAPACITOR 50V 0.47U	1	
C243		ECUM1C104KBN	C.CAPACITOR CH 16V 0.1U	1	
C244		ECUM1E104ZFN	C.CAPACITOR CH 25V 0.1U	1	
C245		ECUM1H103KBN	C.CAPACITOR CH 50V 0.01U	1	
C247		ECUM1H103KBN	C.CAPACITOR CH 50V 0.01U	1	
C248		ECEA0JU470	E.CAPACITOR 6.3V 47U	1	
C249		ECUM1H103KBN	C.CAPACITOR CH 50V 0.01U	1	
C257,58		ECUM1E104ZFN	C.CAPACITOR CH 25V 0.1U	2	
C260		ECUM1H221JCN	C.CAPACITOR CH 50V 220P	1	
C261		ECUM1H030DCN	C.CAPACITOR CH 50V 3P	1	
C263		ECUM1H103KBN	C.CAPACITOR CH 50V 0.01U	1	
C264		ECEA1HNR47S	E.CAPACITOR 50V 0.47U	1	

Ref.No.	Part No.	Part Name & Description	Pcs	Remarks
C266,67	ECUM1E104ZFN	C.CAPACITOR CH 25V 0.1U	2	
C268	ECUM1H103KBN	C.CAPACITOR CH 50V 0.01U	1	
C269	ECEA1AU101	E.CAPACITOR 10V 100U	1	
C270,71	ECUM1H103KBN	C.CAPACITOR CH 50V 0.01U	2	
C272	ECEA1AU101	E.CAPACITOR 10V 100U	1	
C273	ECUM1H103KBN	C.CAPACITOR CH 50V 0.01U	1	
C275	ECUM1H120JCN	C.CAPACITOR CH 50V 12P	1	
C276	ECUM1H560JCN	C.CAPACITOR CH 50V 56P	1	
C278	ECUM1H100DCN	C.CAPACITOR CH 50V 10P	1	
C279	ECUM1H680JCN	C.CAPACITOR CH 50V 68P	1	
C280	ECUM1H330JCN	C.CAPACITOR CH 50V 33P	1	
C281	ECUM1H100DCN	C.CAPACITOR CH 50V 10P	1	
C282	ECUM1C104KBN	C.CAPACITOR CH 16V 0.1U	1	
C283	ECUM1E104ZFN	C.CAPACITOR CH 25V 0.1U	1	
C284	ECUM1H103KBN	C.CAPACITOR CH 50V 0.01U	1	
C291	ECUM1H103KBN	C.CAPACITOR CH 50V 0.01U	1	
C292	ECEA1CU221	E.CAPACITOR 16V 220U	1	
C293	ECUM1H103KBN	C.CAPACITOR CH 50V 0.01U	1	
C294	ECEA0JU101	E.CAPACITOR 6.3V 100U	1	
C297,98	ECUM1E104ZFN	C.CAPACITOR CH 25V 0.1U	2	
C299	ECUM1H103KBN	C.CAPACITOR CH 50V 0.01U	1	
C300	ECEA1AU101	E.CAPACITOR 10V 100U	1	
C301	ECUM1H103KBN	C.CAPACITOR CH 50V 0.01U	1	
C303	ECUM1H271JCN	C.CAPACITOR CH 50V 270P	1	
C304	ECUM1H330JCN	C.CAPACITOR CH 50V 33P	1	
C305,06	ECEA1HNR47S	E.CAPACITOR 50V 0.47U	2	
C307,08	ECQM1H104JF	P.CAPACITOR 50V 0.1U	2	
C311	ECUM1H560JCN	C.CAPACITOR CH 50V 56P	1	
C312,13	ECUM1H120JCN	C.CAPACITOR CH 50V 12P	2	
C314	ECUM1H560JCN	C.CAPACITOR CH 50V 56P	1	
C501,02	ECEA1CU101	E.CAPACITOR 16V 100U	2	
C503	ECUM1H330JCN	C.CAPACITOR CH 50V 33P	1	
C504	ECUM1C104KBN	C.CAPACITOR CH 16V 0.1U	1	
C505	ECUM1H103KBN	C.CAPACITOR CH 50V 0.01U	1	
C506	ECEA1HNR47S	E.CAPACITOR 50V 0.47U	1	
C507,08	ECUM1H103KBN	C.CAPACITOR CH 50V 0.01U	2	
C510	ECUM1H103KBN	C.CAPACITOR CH 50V 0.01U	1	
C517	ECUM1H103KBN	C.CAPACITOR CH 50V 0.01U	1	
C518	ECUM1H330JCN	C.CAPACITOR CH 50V 33P	1	
C519,20	ECUM1H103KBN	C.CAPACITOR CH 50V 0.01U	2	
C521	ECEA0JU470	E.CAPACITOR 6.3V 47U	1	
C522	ECUM1H220JCN	C.CAPACITOR CH 50V 22P	1	
C523	ECUM1H181JCN	C.CAPACITOR CH 50V 180P	1	
C524	ECUM1H103KBN	C.CAPACITOR CH 50V 0.01U	1	
C525	ECEA0JU101	E.CAPACITOR 6.3V 100U	1	
C526	ECUM1H103KBN	C.CAPACITOR CH 50V 0.01U	1	
C527,28	ECEA1CU101	E.CAPACITOR 16V 100U	2	
C531	ECEA1CU101	E.CAPACITOR 16V 100U	1	
C532	ECUM1H103KBN	C.CAPACITOR CH 50V 0.01U	1	
C533	ECEA1CU101	E.CAPACITOR 16V 100U	1	
C534,35	ECUM1H103KBN	C.CAPACITOR CH 50V 0.01U	2	
C536,37	ECUM1H560JCN	C.CAPACITOR CH 50V 56P	2	
C538,39	ECUM1H103KBN	C.CAPACITOR CH 50V 0.01U	2	
C540	ECUM1E104ZFN	C.CAPACITOR CH 25V 0.1U	1	
C541	ECUM1H270JCN	C.CAPACITOR CH 50V 27P	1	
C542	ECUM1H221JCN	C.CAPACITOR CH 50V 220P	1	
C543	ECUM1H120JCN	C.CAPACITOR CH 50V 12P	1	
C546	ECUM1H101JCN	C.CAPACITOR CH 50V 100P	1	
C547	ECUM1H470JCN	C.CAPACITOR CH 50V 47P	1	
C548	ECUM1H100DCN	C.CAPACITOR CH 50V 10P	1	
C549	ECUM1H330JCN	C.CAPACITOR CH 50V 33P	1	
C550	ECUM1H103KBN	C.CAPACITOR CH 50V 0.01U	1	
C551	ECUM1H471JCN	C.CAPACITOR CH 50V 470P	1	
C552	ECUM1H270JCN	C.CAPACITOR CH 50V 27P	1	
C553	ECUM1H103KBN	C.CAPACITOR CH 50V 0.01U	1	
C554	ECUM1E104ZFN	C.CAPACITOR CH 25V 0.1U	1	
C555	ECUM1H103KBN	C.CAPACITOR CH 50V 0.01U	1	
C559	ECEA0JU470	E.CAPACITOR 6.3V 47U	1	
C560	ECUM1H103KBN	C.CAPACITOR CH 50V 0.01U	1	
C561	ECEA0JN330S	E.CAPACITOR 6.3V 33U	1	
C562	ECUM1H680JCN	C.CAPACITOR CH 50V 68P	1	
C563	ECUM1H271JCN	C.CAPACITOR CH 50V 270P	1	
C564	ECUM1H151JCN	C.CAPACITOR CH 50V 150P	1	
C565	ECUM1H471JCN	C.CAPACITOR CH 50V 470P	1	
C566	ECEA1CU470	E.CAPACITOR 16V 47U	1	

Ref.No.	Part No.	Part Name & Description	Pcs	Remarks
C567-69	ECUM1H103KBN	C.CAPACITOR CH 50V 0.01U	3	
C570	ECEA1CU470	E.CAPACITOR 16V 47U	1	
C571	ECUM1H103KBN	C.CAPACITOR CH 50V 0.01U	1	
C572	ECUM1E104ZFN	C.CAPACITOR CH 25V 0.1U	1	
C573	ECUM1H103KBN	C.CAPACITOR CH 50V 0.01U	1	
C574,75	ECUM1H220JCN	C.CAPACITOR CH 50V 22P	2	
C576,77	ECUM1H103KBN	C.CAPACITOR CH 50V 0.01U	2	
C578	ECEA0JU101	E.CAPACITOR 6.3V 100U	1	
C579	ECUM1E104ZFN	C.CAPACITOR CH 25V 0.1U	1	
C580,81	ECUM1H220JCN	C.CAPACITOR CH 50V 22P	2	
C582	ECEA0JU101	E.CAPACITOR 6.3V 100U	1	
C583	ECUM1E104ZFN	C.CAPACITOR CH 25V 0.1U	1	
C584	ECUM1H103KBN	C.CAPACITOR CH 50V 0.01U	1	
C585	ECUM1H820JCN	C.CAPACITOR CH 50V 82P	1	
C586	ECUM1H100DCN	C.CAPACITOR CH 50V 10P	1	
C587,88	ECUM1H103KBN	C.CAPACITOR CH 50V 0.01U	2	
C589	ECUM1H271JCN	C.CAPACITOR CH 50V 270P	1	
C590	ECUM1H221JCN	C.CAPACITOR CH 50V 220P	1	
C591	ECUM1H820JCN	C.CAPACITOR CH 50V 82P	1	
C592-97	ECUM1H103KBN	C.CAPACITOR CH 50V 0.01U	6	
C598	ECEA1CU101	E.CAPACITOR 16V 100U	1	
C599,00	ECUM1H103KBN	C.CAPACITOR CH 50V 0.01U	2	
C601	ECEA1CU101	E.CAPACITOR 16V 100U	1	
C602	ECUM1H103KBN	C.CAPACITOR CH 50V 0.01U	1	
C603	ECEA1AU101	E.CAPACITOR 10V 100U	1	
C604	ECUM1H103KBN	C.CAPACITOR CH 50V 0.01U	1	
C605	ECEA1AU101	E.CAPACITOR 10V 100U	1	
C606	ECUM1H103KBN	C.CAPACITOR CH 50V 0.01U	1	
C607	ECEA0JU101	E.CAPACITOR 6.3V 100U	1	
C608	ECUM1H103KBN	C.CAPACITOR CH 50V 0.01U	1	
C609	ECEA0JU101	E.CAPACITOR 6.3V 100U	1	
C610	ECUM1H103KBN	C.CAPACITOR CH 50V 0.01U	1	
C611	ECUM1E104ZFN	C.CAPACITOR CH 25V 0.1U	1	
C612	ECUM1H103KBN	C.CAPACITOR CH 50V 0.01U	1	
C615-18	ECUM1H103KBN	C.CAPACITOR CH 50V 0.01U	4	
C619	ECUM1H221JCN	C.CAPACITOR CH 50V 220P	1	
C620	ECQM1H104JF	P.CAPACITOR 50V 0.1U	1	
C621	ECEA1CU100	E.CAPACITOR 16V 10U	1	
C622	ECQM1H104JF	P.CAPACITOR 50V 0.1U	1	
C623	ECEA1CU470	E.CAPACITOR 16V 47U	1	
C624	ECQM1H104JF	P.CAPACITOR 50V 0.1U	1	
C625	ECEA1CU470	E.CAPACITOR 16V 47U	1	
C626	ECQM1H104JF	P.CAPACITOR 50V 0.1U	1	
C627,28	ECUM1H122JN	C.CAPACITOR CH 50V 1200P	2	
C629	ECUM1H221JCN	C.CAPACITOR CH 50V 220P	1	
C630,31	ECUM1H122JN	C.CAPACITOR CH 50V 1200P	2	
C632	ECUM1H103KBN	C.CAPACITOR CH 50V 0.01U	1	
C634	ECUM1H270JCN	C.CAPACITOR CH 50V 27P	1	
C635	ECCF1H120JC	C.CAPACITOR 50V 12P	1	
C800	ECUM1H122JN	C.CAPACITOR CH 50V 1200P	1	
C801	ECUM1H151JCN	C.CAPACITOR CH 50V 150P	1	
C802	ECQM1H122JF	P.CAPACITOR 50V 1200P	1	
C803	ECQV1H684JZ	P.CAPACITOR 50V 0.68U	1	
C804-06	ECUM1H151JCN	C.CAPACITOR CH 50V 150P	3	
C808	ECUM1H151JCN	C.CAPACITOR CH 50V 150P	1	
C809,10	ECUM1H122JN	C.CAPACITOR CH 50V 1200P	2	
C812	ECUM1H103KBN	C.CAPACITOR CH 50V 0.01U	1	
C813	ECUM1H101JCN	C.CAPACITOR CH 50V 100P	1	
C814-22	ECUM1H122JN	C.CAPACITOR CH 50V 1200P	9	
C823-25	ECUM1E104ZFN	C.CAPACITOR CH 25V 0.1U	3	
C827	ECEA0JU101	E.CAPACITOR 6.3V 100U	1	
C828,29	ECUM1H101JCN	C.CAPACITOR CH 50V 100P	2	
C830	ECUM1H820JCN	C.CAPACITOR CH 50V 82P	1	
C831	ECUM1H103KBN	C.CAPACITOR CH 50V 0.01U	1	
C832	ECUM1E104ZFN	C.CAPACITOR CH 25V 0.1U	1	
C834	ECEA1CN100S	E.CAPACITOR 16V 10U	1	
C835	ECEA1EN4R7S	E.CAPACITOR 25V 4.7U	1	
C836	ECEA0JN330S	E.CAPACITOR 6.3V 33U	1	
C837	ECEA1EN4R7S	E.CAPACITOR 25V 4.7U	1	
C838	ECUM1E104ZFN	C.CAPACITOR CH 25V 0.1U	1	
C841	ECUM1H103KBN	C.CAPACITOR CH 50V 0.01U	1	
C842	ECEA0JU101	E.CAPACITOR 6.3V 100U	1	
C843,44	ECUM1H103KBN	C.CAPACITOR CH 50V 0.01U	2	
C845	ECEA0JU101	E.CAPACITOR 6.3V 100U	1	
C846,47	ECUM1H103KBN	C.CAPACITOR CH 50V 0.01U	2	

Ref.No.	Part No.	Part Name & Description	Pcs	Remarks
C848	ECEA0JU101	E.CAPACITOR 6.3V 100U	1	
C849	ECUM1H103KBN	C.CAPACITOR CH 50V 0.01U	1	
C850	ECEA0JU101	E.CAPACITOR 6.3V 100U	1	
C851	ECUM1H820JCN	C.CAPACITOR CH 50V 82P	1	
C852	ECUM1H103KBN	C.CAPACITOR CH 50V 0.01U	1	
C853	ECUM1H122JN	C.CAPACITOR CH 50V 1200P	1	
C854	ECQB1H272JF	P.CAPACITOR 50V 2700P	1	
C855,56	ECCF1H331JC	C.CAPACITOR 50V 330P	2	
C857	ECCF1H330JC	C.CAPACITOR 50V 33P	1	
C1001	ECEA1HU010	E.CAPACITOR 50V 1U	1	
C1003,04	ECEA1CN100S	E.CAPACITOR 16V 10U	2	
C1005	ECUM1H221JCN	C.CAPACITOR CH 50V 220P	1	
C1006	ECUM1H470JCN	C.CAPACITOR CH 50V 47P	1	
D1	1SZ51	DIODE	1	
D2	MA153	DIODE	1	
D4	MA153	DIODE	1	
D8	MA151WK	DIODE	1	
D11	MA151WK	DIODE	1	
D200,01	RD4.7EB2	ZENER 4.7V	2	
D203,04	MA151K	DIODE	2	
D210	MA151K	DIODE	1	
D501	RD3.6EB	ZENER 3.6V	1	
D508	RD4.7EB2	ZENER 4.7V	1	
D510,11	MA335-R	DIODE	2	
D512	MA153	DIODE	1	
D514	MA151K	DIODE	1	
D800	MA704	DIODE	1	
D801	MA153	DIODE	1	
D802	MA151K	DIODE	1	
FL1	VLF0650	FILTER	1	
FL3	VLF0754	FILTER	1	
FL200	VLF0712	FILTER	1	
FL201,02	VLF0753	FILTER	2	
IC1	AN78N09	IC	1	
IC1	MC10107L	IC	1	
IC2	AN79N09	IC	1	
IC3	MC74HC4053F	IC	1	
IC4-C6	TL082CPS	IC	3	
IC7	HA19211BNT	IC	1	
IC8	MC74HC574AF	IC	1	
IC9	TL082CPS	IC	1	
IC10-12	TL082CPS	IC	3	
IC13	HA19211BNT	IC	1	
IC14	MC74HC574AF	IC	1	
IC15	AN78N09	IC	1	
IC16	AN79N09	IC	1	
IC17	AN79L05	IC	1	
IC18,19	AN78N05	IC	2	
IC26,27	AN91A12S	IC	2	
IC28	MC74HC08AF	IC	1	
IC29	SN74LS123NS	IC	1	
IC30	NE521D	IC	1	
IC32	AN78N05	IC	1	
IC33	AN79N05	IC	1	
IC200	AN78N09	IC	1	
IC201	AN79N09	IC	1	
IC202	AN78N09	IC	1	
IC203	AN79N09	IC	1	
IC204	AN78N09	IC	1	
IC205	AN79N09	IC	1	
IC206	TL082CPS	IC	1	
IC207	CA3054	IC	1	
IC208-10	TL082CPS	IC	3	
IC211	AN78L05	IC	1	
IC215	TL082CPS	IC	1	
IC216	AN79L09	IC	1	

Ref.No.	Part No.	Part Name & Description	Pcs	Remarks
IC501	TL082CPS	IC	1	
IC502,03	CA3054	IC	2	
IC504,05	NJM1496M	IC	2	
IC506	10116D	IC	1	
IC507	MC74HC04AF	IC	1	
IC508	NJM1496M	IC	1	
IC509	MC74HC00AF	IC	1	
IC510	MC74HC74AF	IC	1	
IC511	SN74LS123NS	IC	1	
IC512	10116D	IC	1	
IC513	MC74HC00AF	IC	1	
IC514	MC74HC74AF	IC	1	
IC517	AN78N09	IC	1	
IC518	AN79N09	IC	1	
IC519	AN78N05	IC	1	
IC520	AN79N05	IC	1	
IC521	AN78N09	IC	1	
IC522	AN79N09	IC	1	
IC523	MC74HC04AF	IC	1	
IC800	NE521D	IC	1	
IC801	MC74HC126AF	IC	1	
IC802,03	MC10125L	IC	2	
IC804	MN5301OVYD	IC	1	
IC805	UPC311G	IC	1	
IC806	MC74HC126AF	IC	1	
IC807-14	TL082CPS	IC	8	
IC815-17	MC74HC4053F	IC	3	
IC818	AN78N09	IC	1	
IC819	AN79N09	IC	1	
IC820	AN78N05	IC	1	
IC821	AN79N05	IC	1	
L1-L3	VLP0017	COIL	3	
L5	VLQEL05S821J	COIL 820UH	1	
L6-L9	VLP0017	COIL	4	
L10	VLQEL05S221J	COIL 220UH	1	
L12	VLQEL05S5R6J	COIL 5.6UH	1	
L13	VLQEL05S390J	COIL 39UH	1	
L14	VLQEL05S100J	COIL 10UH	1	
L15	VLQEL05S5R6J	COIL 5.6UH	1	
L17	VLQEL05S5R6J	COIL 5.6UH	1	
L18	VLQEL05S390J	COIL 39UH	1	
L19	VLQEL05S100J	COIL 10UH	1	
L20	VLQEL05S5R6J	COIL 5.6UH	1	
L200	VLQEL05S6R8J	COIL 6.8UH	1	
L201	VLQEL05S151J	COIL 150UH	1	
L203	VLQEL05S151J	COIL 150UH	1	
L205,06	VLP0017	COIL	2	
L208,09	VLQEL05S6R8J	COIL 6.8UH	2	
L210	VLQEL05S101J	COIL 100UH	1	
L211,12	VLQEL05S6R8J	COIL 6.8UH	2	
L501,02	VLQEL05S101K	COIL 100UH	2	
L503	VLQEL05S6R8J	COIL 6.8UH	1	
L505	VLQEL05S101K	COIL 100UH	1	
L506	VLQEL05S680J	COIL 68UH	1	
L507,08	VLQEL05S101K	COIL 100UH	2	
L511	VLQEL05S150J	COIL 15UH	1	
L512	VLQEL05S5R6J	COIL 5.6UH	1	
L513	VLQEL05S6R8J	COIL 6.8UH	1	
L514	VLQEL05S180J	COIL 18UH	1	
L515	VLQEL05S560J	COIL 56UH	1	
L518,19	VLQEL05S101K	COIL 100UH	2	
L520,21	VLQEL05S470J	COIL 47UH	2	
L522,23	VLP0017	COIL	2	
L801	VLQEL05S8R2J	COIL 8.2UH	1	
Q1	2SD601-R	TRANSISTOR CHIP	1	(▷,R)
Q2	2SB709-R	TRANSISTOR CHIP	1	(▷,R)
Q3	2SD601-R	TRANSISTOR CHIP	1	(▷,R)
Q4,Q5	2SB709-R	TRANSISTOR CHIP	2	(▷,R)
Q6,Q7	2SC2404-C	TRANSISTOR CHIP	2	(▱,D)

Ref.No.		Part No.	Part Name & Description	Pcs	Remarks
Q8		2SA1022-B	TRANSISTOR CHIP	1	(B,C)
Q9		2SC2295-B	TRANSISTOR CHIP	1	(B,C)
Q10		2SA1022-B	TRANSISTOR CHIP	1	(B,C)
Q11		2SK374-R	TRANSISTOR	1	(Q,R)
Q12		2SB709-R	TRANSISTOR CHIP	1	(Q,R)
Q13		2SD601-R	TRANSISTOR CHIP	1	(Q,R)
Q14		2SB709-R	TRANSISTOR CHIP	1	(Q,R)
Q15		2SD601-R	TRANSISTOR CHIP	1	(Q,R)
Q16		2SB709-R	TRANSISTOR CHIP	1	(Q,R)
Q17,18		2SC2404-C	TRANSISTOR CHIP	2	(C,D)
Q19		2SA1022-B	TRANSISTOR CHIP	1	(B,C)
Q20		2SC2295-B	TRANSISTOR CHIP	1	(B,C)
Q21		2SA1022-B	TRANSISTOR CHIP	1	(B,C)
Q22		2SK374-R	TRANSISTOR	1	(Q,R)
Q23		2SB709-R	TRANSISTOR CHIP	1	(Q,R)
Q24		2SD601-R	TRANSISTOR CHIP	1	(Q,R)
Q25		2SA1022-B	TRANSISTOR CHIP	1	(B,C)
Q26-28		2SD601-R	TRANSISTOR CHIP	3	(Q,R)
Q200		2SD601-R	TRANSISTOR CHIP	1	(Q,R)
Q201,02		2SB709-R	TRANSISTOR CHIP	2	(Q,R)
Q203,04		2SD601-R	TRANSISTOR CHIP	2	(Q,R)
Q205,06		2SC2404-C	TRANSISTOR CHIP	2	(C,D)
Q207		2SA1022-B	TRANSISTOR CHIP	1	(B,C)
Q208		2SC2295-B	TRANSISTOR CHIP	1	(B,C)
Q209		2SD601-R	TRANSISTOR CHIP	1	(Q,R)
Q210		2SK198	TRANSISTOR	1	(Q,R)
Q211-15		2SD601-R	TRANSISTOR CHIP	5	(Q,R)
Q219		2SD601-R	TRANSISTOR CHIP	1	(Q,R)
Q220,21		2SB709-R	TRANSISTOR CHIP	2	(Q,R)
Q222		2SD601-R	TRANSISTOR CHIP	1	(Q,R)
Q223,24		2SC2404-C	TRANSISTOR CHIP	2	(C,D)
Q225		2SA1022-B	TRANSISTOR CHIP	1	(B,C)
Q226		2SC2295-B	TRANSISTOR CHIP	1	(B,C)
Q227		2SD601-R	TRANSISTOR CHIP	1	(Q,R)
Q229		2SB709-R	TRANSISTOR CHIP	1	(Q,R)
Q230		2SD601-R	TRANSISTOR CHIP	1	(Q,R)
Q232,33		2SB709-R	TRANSISTOR CHIP	2	(Q,R)
Q234		2SD601-R	TRANSISTOR CHIP	1	(Q,R)
Q235,36		2SC2404-C	TRANSISTOR CHIP	2	(C,D)
Q237		2SK198	TRANSISTOR	1	(Q,R)
Q238,39		2SB709-R	TRANSISTOR CHIP	2	(Q,R)
Q240		2SD601-R	TRANSISTOR CHIP	1	(Q,R)
Q241,42		2SC2404-C	TRANSISTOR CHIP	2	(C,D)
Q243		2SA1022-B	TRANSISTOR CHIP	1	(B,C)
Q244		2SC2295-B	TRANSISTOR CHIP	1	(B,C)
Q245		2SD601-R	TRANSISTOR CHIP	1	(Q,R)
Q246		2SK198	TRANSISTOR	1	(Q,R)
Q247		2SB709-R	TRANSISTOR CHIP	1	(Q,R)
Q248,49		2SD601-R	TRANSISTOR CHIP	2	(Q,R)
Q250,51		2SB709-R	TRANSISTOR CHIP	2	(Q,R)
Q252		2SD601-R	TRANSISTOR CHIP	1	(Q,R)
Q253,54		2SC2404-C	TRANSISTOR CHIP	2	(C,D)
Q255		2SK198	TRANSISTOR	1	(Q,R)
Q256		2SC2404-C	TRANSISTOR CHIP	1	(C,D)
Q257		2SB709-R	TRANSISTOR CHIP	1	(Q,R)
Q258		2SA1022-B	TRANSISTOR CHIP	1	(B,C)
Q259-63		2SC2295-B	TRANSISTOR CHIP	5	(B,C)
Q265		2SC2295-B	TRANSISTOR CHIP	1	(B,C)
Q266,67		2SD601-R	TRANSISTOR CHIP	2	(Q,R)
Q284		2SK198	TRANSISTOR	1	(Q,R)
Q285		2SC2295-B	TRANSISTOR CHIP	1	(B,C)
Q286,87		2SD601-R	TRANSISTOR CHIP	2	(Q,R)
Q288,89		2SB709-R	TRANSISTOR CHIP	2	(Q,R)
Q290		2SD601-R	TRANSISTOR CHIP	1	(Q,R)
Q291,92		2SB709-R	TRANSISTOR CHIP	2	(Q,R)
Q501,02		2SC2295-B	TRANSISTOR CHIP	2	(B,C)
Q503,04		2SD601-R	TRANSISTOR CHIP	2	(Q,R)
Q505		2SK198	TRANSISTOR	1	(Q,R)
Q506		2SB709-R	TRANSISTOR CHIP	1	(Q,R)
Q507-09		2SD601-R	TRANSISTOR CHIP	3	(Q,R)
Q514-16		2SD601-R	TRANSISTOR CHIP	3	(Q,R)
Q518		2SD601-R	TRANSISTOR CHIP	1	(Q,R)
Q519		2SC2295-B	TRANSISTOR CHIP	1	(B,C)
Q520		2SD601-R	TRANSISTOR CHIP	1	(Q,R)
Q521,22		2SC2295-B	TRANSISTOR CHIP	2	(B,C)

Ref.No.		Part No.	Part Name & Description	Pcs	Remarks
Q523		2SD601-R	TRANSISTOR CHIP	1	(Q,R)
Q524,25		2SB709-R	TRANSISTOR CHIP	2	(Q,R)
Q526,27		2SC2295-B	TRANSISTOR CHIP	2	(B,C)
Q528		2SD601-R	TRANSISTOR CHIP	1	(Q,R)
Q532		2SB709-R	TRANSISTOR CHIP	1	(Q,R)
Q533-37		2SD601-R	TRANSISTOR CHIP	5	(Q,R)
Q538		2SB709-R	TRANSISTOR CHIP	1	(Q,R)
Q539		2SD601-R	TRANSISTOR CHIP	1	(Q,R)
Q540		2SB709-R	TRANSISTOR CHIP	1	(Q,R)
Q541		2SD601-R	TRANSISTOR CHIP	1	(Q,R)
Q542		2SB709-R	TRANSISTOR CHIP	1	(Q,R)
Q543		2SD601-R	TRANSISTOR CHIP	1	(Q,R)
Q544		2SB709-R	TRANSISTOR CHIP	1	(Q,R)
Q545-52		2SD601-R	TRANSISTOR CHIP	8	(Q,R)
Q800		2SC2295-B	TRANSISTOR CHIP	1	(B,C)
Q801		2SD601-R	TRANSISTOR CHIP	1	(Q,R)
Q802		2SB709-R	TRANSISTOR CHIP	1	(Q,R)
Q803		2SC2295-B	TRANSISTOR CHIP	1	(B,C)
Q804		2SB709-R	TRANSISTOR CHIP	1	(Q,R)
Q805		2SC2295-B	TRANSISTOR CHIP	1	(B,C)
Q807		2SD601-R	TRANSISTOR CHIP	1	(Q,R)
Q808-15		2SC2295-B	TRANSISTOR CHIP	8	(B,C)
Q816,17		2SB709-R	TRANSISTOR CHIP	2	(Q,R)
Q818,19		2SC2295-B	TRANSISTOR CHIP	2	(B,C)
Q826		ECUM1E104ZFN	C.CAPACITOR CH 25V 0.1U	1	
Q833		ECUM1E104ZFN	C.CAPACITOR CH 25V 0.1U	1	
			RESISTORS		
R1		ERJ6GEYG222	M.RESISTOR CH 1/10W 2.2K	1	
R2,R3		ERJ6GEYG220	M.RESISTOR CH 1/10W 22	2	
R4,R5		ERJ6GEYG152	M.RESISTOR CH 1/10W 1.5K	2	
R6,R7		VRE0034E561	M.RESISTOR CH 1/10W 560	2	
R8		ERJ6GEYG150	M.RESISTOR CH 1/10W 15	1	
R9		ERJ6GEYG473	M.RESISTOR CH 1/10W 47K	1	
R10		VRE0034E301	M.RESISTOR CH 1/10W 300	1	
R11		ERJ6GEYG220	M.RESISTOR CH 1/10W 22	1	
R12		ERJ6GEYG122	M.RESISTOR CH 1/10W 1.2K	1	
R13		VRE0034E221	M.RESISTOR CH 1/10W 220	1	
R14		VRE0034E121	M.RESISTOR CH 1/10W 120	1	
R15		VRE0034E301	M.RESISTOR CH 1/10W 300	1	
R16		ERJ6GEYG683	M.RESISTOR CH 1/10W 68K	1	
R17		ERJ6GEYG332	M.RESISTOR CH 1/10W 3.3K	1	
R18		ERJ6GEYG151	M.RESISTOR CH 1/10W 150	1	
R19		ERJ6GEYG101	M.RESISTOR CH 1/10W 100	1	
R20		ERJ6GEYG472	M.RESISTOR CH 1/10W 4.7K	1	
R21		ERJ6GEYG183	M.RESISTOR CH 1/10W 18K	1	
R22		ERJ6GEYG821	M.RESISTOR CH 1/10W 820	1	
R23,24		ERJ6GEYG102	M.RESISTOR CH 1/10W 1K	2	
R25,26		ERJ6GEYG101	M.RESISTOR CH 1/10W 100	2	
R27		ERJ6GEYG122	M.RESISTOR CH 1/10W 1.2K	1	
R28		ERJ6GEYG471	M.RESISTOR CH 1/10W 470	1	
R29		ERJ6GEYG222	M.RESISTOR CH 1/10W 2.2K	1	
R30		ERJ6GEYG272	M.RESISTOR CH 1/10W 2.7K	1	
R31		VRE0034E333	M.RESISTOR CH 1/10W 33K	1	
R32		VRE0034E103	M.RESISTOR CH 1/10W 10K	1	
R33		ERJ6GEYG222	M.RESISTOR CH 1/10W 2.2K	1	
R34		ERJ6GEYG223	M.RESISTOR CH 1/10W 22K	1	
R35		ERJ6GEYG562	M.RESISTOR CH 1/10W 5.6K	1	
R36,37		ERJ6GEYG332	M.RESISTOR CH 1/10W 3.3K	2	
R38		ERJ6GEYG823	M.RESISTOR CH 1/10W 82K	1	
R39		ERJ6GEYG332	M.RESISTOR CH 1/10W 3.3K	1	
R40		ERJ6GEYG222	M.RESISTOR CH 1/10W 2.2K	1	
R41		ERJ6GEYG563	M.RESISTOR CH 1/10W 56K	1	
R42		ERJ6GEYG333	M.RESISTOR CH 1/10W 33K	1	
R43		ERJ6GEYG332	M.RESISTOR CH 1/10W 3.3K	1	
R44		ERJ6GEYG272	M.RESISTOR CH 1/10W 2.7K	1	
R45		ERJ6GEYG273	M.RESISTOR CH 1/10W 27K	1	
R46		ERJ6GEYG224	M.RESISTOR CH 1/10W 220K	1	
R47		ERJ6GEYG472	M.RESISTOR CH 1/10W 4.7K	1	
R48		ERJ6GEYG272	M.RESISTOR CH 1/10W 2.7K	1	
R49		ERJ6GEYG221	M.RESISTOR CH 1/10W 220	1	
R50		ERJ6GEYG391	M.RESISTOR CH 1/10W 390	1	
R51		VRE0034E273	M.RESISTOR CH 1/10W 27K	1	

Ref.No.	Part No.	Part Name & Description	Pcs	Remarks
R52	VRE0034E203	M.RESISTOR CH 1/10W 20K	1	
R53	VRE0034E153	M.RESISTOR CH 1/10W 15K	1	
R54	ERJ6GEYG220	M.RESISTOR CH 1/10W 22	1	
R55	ERJ6GEYG222	M.RESISTOR CH 1/10W 2.2K	1	
R56	ERJ6GEYG332	M.RESISTOR CH 1/10W 3.3K	1	
R57	ERJ6GEYG222	M.RESISTOR CH 1/10W 2.2K	1	
R58,59	ERJ6GEYG220	M.RESISTOR CH 1/10W 22	2	
R60,61	ERJ6GEYG152	M.RESISTOR CH 1/10W 1.5K	2	
R62,63	VRE0034E561	M.RESISTOR CH 1/10W 560	2	
R64	ERJ6GEYG150	M.RESISTOR CH 1/10W 15	1	
R65	VRE0034E301	M.RESISTOR CH 1/10W 300	1	
R66	ERJ6GEYG220	M.RESISTOR CH 1/10W 22	1	
R67	ERJ6GEYG222	M.RESISTOR CH 1/10W 2.2K	1	
R68	ERJ6GEYG102	M.RESISTOR CH 1/10W 1K	1	
R69	ERJ6GEYG471	M.RESISTOR CH 1/10W 470	1	
R70	ERJ6GEYG122	M.RESISTOR CH 1/10W 1.2K	1	
R71	ERJ6GEYG101	M.RESISTOR CH 1/10W 100	1	
R72	ERJ6GEYG472	M.RESISTOR CH 1/10W 4.7K	1	
R73	ERJ6GEYG183	M.RESISTOR CH 1/10W 18K	1	
R74	ERJ6GEYG102	M.RESISTOR CH 1/10W 1K	1	
R75	ERJ6GEYG101	M.RESISTOR CH 1/10W 100	1	
R76	ERJ6GEYG102	M.RESISTOR CH 1/10W 1K	1	
R77	ERJ6GEYG101	M.RESISTOR CH 1/10W 100	1	
R78	ERJ6GEYG122	M.RESISTOR CH 1/10W 1.2K	1	
R79	ERJ6GEYG471	M.RESISTOR CH 1/10W 470	1	
R80	ERJ6GEYG222	M.RESISTOR CH 1/10W 2.2K	1	
R81	ERJ6GEYG272	M.RESISTOR CH 1/10W 2.7K	1	
R82	ERJ6GEYG223	M.RESISTOR CH 1/10W 22K	1	
R83	ERJ6GEYG222	M.RESISTOR CH 1/10W 2.2K	1	
R84	ERJ6GEYG220	M.RESISTOR CH 1/10W 22	1	
R85	ERJ6GEYG562	M.RESISTOR CH 1/10W 5.6K	1	
R86,87	ERJ6GEYG332	M.RESISTOR CH 1/10W 3.3K	2	
R88	ERJ6GEYG823	M.RESISTOR CH 1/10W 82K	1	
R89	ERJ6GEYG332	M.RESISTOR CH 1/10W 3.3K	1	
R90	ERJ6GEYG222	M.RESISTOR CH 1/10W 2.2K	1	
R91	ERJ6GEYG563	M.RESISTOR CH 1/10W 56K	1	
R92	ERJ6GEYG333	M.RESISTOR CH 1/10W 33K	1	
R93	ERJ6GEYG332	M.RESISTOR CH 1/10W 3.3K	1	
R94	ERJ6GEYG273	M.RESISTOR CH 1/10W 27K	1	
R95	ERJ6GEYG272	M.RESISTOR CH 1/10W 2.7K	1	
R96	ERJ6GEYG472	M.RESISTOR CH 1/10W 4.7K	1	
R97	ERJ6GEYG224	M.RESISTOR CH 1/10W 220K	1	
R98	ERJ6GEYG272	M.RESISTOR CH 1/10W 2.7K	1	
R99	ERJ6GEYG221	M.RESISTOR CH 1/10W 220	1	
R100	ERJ6GEYG222	M.RESISTOR CH 1/10W 2.2K	1	
R101	ERJ6GEYG332	M.RESISTOR CH 1/10W 3.3K	1	
R102	ERJ6GEYG272	M.RESISTOR CH 1/10W 2.7K	1	
R103	VRE0034E223	M.RESISTOR CH 1/10W 22K	1	
R104	VRE0034E153	M.RESISTOR CH 1/10W 15K	1	
R105	ERJ6GEYG272	M.RESISTOR CH 1/10W 2.7K	1	
R109,10	ERJ6GEY0R00	M.RESISTOR CH 1/10W 0	2	
R133	ERJ6GEYG224	M.RESISTOR CH 1/10W 220K	1	
R135,36	ERJ6GEYG822	M.RESISTOR CH 1/10W 8.2K	2	
R137	ERJ6GEYG222	M.RESISTOR CH 1/10W 2.2K	1	
R138	ERJ6GEYG102	M.RESISTOR CH 1/10W 1K	1	
R139	ERJ6GEYG222	M.RESISTOR CH 1/10W 2.2K	1	
R140	ERJ6GEYG104	M.RESISTOR CH 1/10W 100K	1	
R141	ERJ6GEYG470	M.RESISTOR CH 1/10W 47	1	
R142	ERJ6GEYG681	M.RESISTOR CH 1/10W 680	1	
R143,44	ERJ6GEYG301	M.RESISTOR CH 1/10W 300	2	
R145	ERJ6GEYG223	M.RESISTOR CH 1/10W 22K	1	
R146	ERJ6GEYG105	M.RESISTOR CH 1/10W 1M	1	
R148,49	ERJ6GEYG103	M.RESISTOR CH 1/10W 10K	2	
R150	ERJ6GEYG104	M.RESISTOR CH 1/10W 100K	1	
R151	ERJ6GEYG102	M.RESISTOR CH 1/10W 1K	1	
R152	ERJ6GEYG222	M.RESISTOR CH 1/10W 2.2K	1	
R153	ERJ6GEYG333	M.RESISTOR CH 1/10W 33K	1	
R154	ERJ6GEYG104	M.RESISTOR CH 1/10W 100K	1	
R155	ERJ6GEYG332	M.RESISTOR CH 1/10W 3.3K	1	
R156	ERJ6GEYG472	M.RESISTOR CH 1/10W 4.7K	1	
R157	ERJ6GEYG103	M.RESISTOR CH 1/10W 10K	1	
R158	ERJ6GEYG221	M.RESISTOR CH 1/10W 220	1	
R159	ERJ6GEYG681	M.RESISTOR CH 1/10W 680	1	
R160,61	ERJ6GEYG301	M.RESISTOR CH 1/10W 300	2	
R162,63	ERJ6GEYG103	M.RESISTOR CH 1/10W 10K	2	

Ref.No.	Part No.	Part Name & Description	Pcs	Remarks
R164,65	ERJ6GEY0R00	M.RESISTOR CH 1/10W 0	2	
R166,67	ERJ6GEYG102	M.RESISTOR CH 1/10W 1K	2	
R168	ERJ6GEYG470	M.RESISTOR CH 1/10W 47	1	
R169,70	ERJ6GEYG272	M.RESISTOR CH 1/10W 2.7K	2	
R171	ERJ6GEYG102	M.RESISTOR CH 1/10W 1K	1	
R172	ERJ6GEYG272	M.RESISTOR CH 1/10W 2.7K	1	
R173	ERJ6GEYG470	M.RESISTOR CH 1/10W 47	1	
R174	ERJ6GEYJ471	M.RESISTOR CH 1/10W 470	1	
R175	ERJ6GEY0R00	M.RESISTOR CH 1/10W 0	1	
R176	ERDS2TJ101	C.RESISTOR 1/4W 100	1	
R178	ERDS2TJ681	C.RESISTOR 1/4W 680	1	
R200	ERJ6GEYG272	M.RESISTOR CH 1/10W 2.7K	1	
R201	ERJ6GEYG222	M.RESISTOR CH 1/10W 2.2K	1	
R202,03	VRE0034E331	M.RESISTOR CH 1/10W 330	2	
R204	ERJ6GEYG470	M.RESISTOR CH 1/10W 47	1	
R205	ERJ6GEYG272	M.RESISTOR CH 1/10W 2.7K	1	
R206,07	VRE0034E102	M.RESISTOR CH 1/10W 1K	2	
R209	VRE0034E621	M.RESISTOR CH 1/10W 620	1	
R210,11	ERJ6GEYG272	M.RESISTOR CH 1/10W 2.7K	2	
R212	ERJ6GEYG102	M.RESISTOR CH 1/10W 1K	1	
R213	ERJ6GEYG221	M.RESISTOR CH 1/10W 220	1	
R214	ERJ6GEYG681	M.RESISTOR CH 1/10W 680	1	
R215	ERJ6GEYG101	M.RESISTOR CH 1/10W 100	1	
R216	ERJ6GEYG102	M.RESISTOR CH 1/10W 1K	1	
R217	ERJ6GEYG101	M.RESISTOR CH 1/10W 100	1	
R218	ERJ6GEYG102	M.RESISTOR CH 1/10W 1K	1	
R219	ERJ6GEYG152	M.RESISTOR CH 1/10W 1.5K	1	
R220	ERJ6GEYG222	M.RESISTOR CH 1/10W 2.2K	1	
R221	ERJ6GEYG471	M.RESISTOR CH 1/10W 470	1	
R222,23	ERJ6GEYG222	M.RESISTOR CH 1/10W 2.2K	2	
R224	ERJ6GEYG101	M.RESISTOR CH 1/10W 100	1	
R225	ERJ6GEYG683	M.RESISTOR CH 1/10W 68K	1	
R226	ERJ6GEYG272	M.RESISTOR CH 1/10W 2.7K	1	
R227	ERJ6GEYG222	M.RESISTOR CH 1/10W 2.2K	1	
R228	ERJ6GEYG103	M.RESISTOR CH 1/10W 10K	1	
R229	ERJ6GEYG102	M.RESISTOR CH 1/10W 1K	1	
R230	ERJ6GEYG222	M.RESISTOR CH 1/10W 2.2K	1	
R231	ERJ6GEYG470	M.RESISTOR CH 1/10W 47	1	
R233	ERJ6GEYG102	M.RESISTOR CH 1/10W 1K	1	
R234	ERJ6GEYG681	M.RESISTOR CH 1/10W 680	1	
R235	ERJ6GEYG561	M.RESISTOR CH 1/10W 560	1	
R236	ERJ6GEYG121	M.RESISTOR CH 1/10W 120	1	
R237	ERJ6GEYG391	M.RESISTOR CH 1/10W 390	1	
R238	ERJ6GEYG223	M.RESISTOR CH 1/10W 22K	1	
R240	ERJ6GEYG182	M.RESISTOR CH 1/10W 1.8K	1	
R241	ERJ6GEYG273	M.RESISTOR CH 1/10W 27K	1	
R242	ERJ6GEYG470	M.RESISTOR CH 1/10W 47	1	
R243	ERJ6GEYG182	M.RESISTOR CH 1/10W 1.8K	1	
R244	VRE0034E151	M.RESISTOR CH 1/10W 150	1	
R245	ERJ6GEYG152	M.RESISTOR CH 1/10W 1.5K	1	
R246	ERJ6GEYG331	M.RESISTOR CH 1/10W 330	1	
R257	VRE0034E331	M.RESISTOR CH 1/10W 330	1	
R258-60	VRE0034E301	M.RESISTOR CH 1/10W 300	3	
R262,63	VRE0034E102	M.RESISTOR CH 1/10W 1K	2	
R264	VRE0034E821	M.RESISTOR CH 1/10W 820	1	
R265,66	VRE0034E102	M.RESISTOR CH 1/10W 1K	2	
R268	ERJ6GEY0R00	M.RESISTOR CH 1/10W 0	1	
R269	ERJ6GEYG272	M.RESISTOR CH 1/10W 2.7K	1	
R270	ERJ6GEYG471	M.RESISTOR CH 1/10W 470	1	
R271	ERJ6GEYG331	M.RESISTOR CH 1/10W 330	1	
R272	ERJ6GEYG152	M.RESISTOR CH 1/10W 1.5K	1	
R273	ERJ6GEYG102	M.RESISTOR CH 1/10W 1K	1	
R274	ERJ6GEYG101	M.RESISTOR CH 1/10W 100	1	
R275	ERJ6GEYG102	M.RESISTOR CH 1/10W 1K	1	
R276	ERJ6GEYG101	M.RESISTOR CH 1/10W 100	1	
R277	ERJ6GEYG152	M.RESISTOR CH 1/10W 1.5K	1	
R278	ERJ6GEYG471	M.RESISTOR CH 1/10W 470	1	
R279	ERJ6GEYG222	M.RESISTOR CH 1/10W 2.2K	1	
R280	ERJ6GEYG152	M.RESISTOR CH 1/10W 1.5K	1	
R281	ERJ6GEYG222	M.RESISTOR CH 1/10W 2.2K	1	
R282	ERJ6GEYG101	M.RESISTOR CH 1/10W 100	1	
R283	ERJ6GEYG272	M.RESISTOR CH 1/10W 2.7K	1	
R285,86	ERJ6GEYG103	M.RESISTOR CH 1/10W 10K	2	
R288	ERJ6GEYG102	M.RESISTOR CH 1/10W 1K	1	
R290	ERJ6GEYG470	M.RESISTOR CH 1/10W 47	1	

Ref.No.	Part No.	Part Name & Description	Pcs	Remarks
R291	ERJ6GEYG222	M.RESISTOR CH 1/10W 2.2K	1	
R292	ERJ6GEYG102	M.RESISTOR CH 1/10W 1K	1	
R293	ERJ6GEYG152	M.RESISTOR CH 1/10W 1.5K	1	
R294	ERJ6GEYG470	M.RESISTOR CH 1/10W 47	1	
R298	ERJ6GEYG470	M.RESISTOR CH 1/10W 47	1	
R299	ERJ6GEYG272	M.RESISTOR CH 1/10W 2.7K	1	
R300,01	VRE0034E102	M.RESISTOR CH 1/10W 1K	2	
R302	ERJ6GEY0R00	M.RESISTOR CH 1/10W 0	1	
R303	ERJ6GEYG272	M.RESISTOR CH 1/10W 2.7K	1	
R306	ERJ6GEYG683	M.RESISTOR CH 1/10W 68K	1	
R307	ERJ6GEYG821	M.RESISTOR CH 1/10W 820	1	
R308	ERJ6GEYG273	M.RESISTOR CH 1/10W 27K	1	
R309	ERJ6GEYG272	M.RESISTOR CH 1/10W 2.7K	1	
R310	ERJ6GEYG682	M.REISITOR CH 1/10W 6.8K	1	
R311	ERJ6GEYG272	M.RESISTOR CH 1/10W 2.7K	1	
R312	ERJ6GEYG222	M.RESISTOR CH 1/10W 2.2K	1	
R313	ERJ6GEYG101	M.RESISTOR CH 1/10W 100	1	
R314	ERJ6GEYG683	M.RESISTOR CH 1/10W 68K	1	
R316-18	VRE0034E301	M.RESISTOR CH 1/10W 300	3	
R320,21	VRE0034E102	M.RESISTOR CH 1/10W 1K	2	
R322	VRE0034E821	M.RESISTOR CH 1/10W 820	1	
R323,24	VRE0034E102	M.RESISTOR CH 1/10W 1K	2	
R326	ERJ6GEY0R00	M.RESISTOR CH 1/10W 0	1	
R327	ERJ6GEYG272	M.RESISTOR CH 1/10W 2.7K	1	
R328	ERJ6GEYG152	M.RESISTOR CH 1/10W 1.5K	1	
R329	ERJ6GEYG471	M.RESISTOR CH 1/10W 470	1	
R330	ERJ6GEYG331	M.RESISTOR CH 1/10W 330	1	
R331	ERJ6GEYG102	M.RESISTOR CH 1/10W 1K	1	
R332	ERJ6GEYG101	M.RESISTOR CH 1/10W 100	1	
R333	ERJ6GEYG102	M.RESISTOR CH 1/10W 1K	1	
R334	ERJ6GEYG101	M.RESISTOR CH 1/10W 100	1	
R335	ERJ6GEYG152	M.RESISTOR CH 1/10W 1.5K	1	
R336	ERJ6GEYG471	M.RESISTOR CH 1/10W 470	1	
R337	ERJ6GEYG222	M.RESISTOR CH 1/10W 2.2K	1	
R338,39	ERJ6GEYG152	M.RESISTOR CH 1/10W 1.5K	2	
R340	ERJ6GEYG101	M.RESISTOR CH 1/10W 100	1	
R341	ERJ6GEYG272	M.RESISTOR CH 1/10W 2.7K	1	
R342	ERJ6GEYG683	M.RESISTOR CH 1/10W 68K	1	
R344,45	ERJ6GEYG103	M.RESISTOR CH 1/10W 10K	2	
R346	ERJ6GEYG102	M.RESISTOR CH 1/10W 1K	1	
R347	ERJ6GEYG470	M.RESISTOR CH 1/10W 47	1	
R348	ERJ6GEYG222	M.RESISTOR CH 1/10W 2.2K	1	
R349	ERJ6GEYG470	M.RESISTOR CH 1/10W 47	1	
R350	ERJ6GEYG152	M.RESISTOR CH 1/10W 1.5K	1	
R351	ERJ6GEYG391	M.RESISTOR CH 1/10W 390	1	
R355	ERJ6GEYG470	M.RESISTOR CH 1/10W 47	1	
R356	ERJ6GEYG222	M.RESISTOR CH 1/10W 2.2K	1	
R357,58	VRE0034E102	M.RESISTOR CH 1/10W 1K	2	
R359	VRE0034E271	M.RESISTOR CH 1/10W 270	1	
R360	ERJ6GEYG272	M.RESISTOR CH 1/10W 2.7K	1	
R364	ERJ6GEYG391	M.RESISTOR CH 1/10W 390	1	
R365	ERJ6GEYG273	M.RESISTOR CH 1/10W 27K	1	
R366	ERJ6GEYG272	M.RESISTOR CH 1/10W 2.7K	1	
R367	ERJ6GEYG682	M.REISITOR CH 1/10W 6.8K	1	
R368	ERJ6GEYG272	M.RESISTOR CH 1/10W 2.7K	1	
R369	ERJ6GEYG222	M.RESISTOR CH 1/10W 2.2K	1	
R370	ERJ6GEYG101	M.RESISTOR CH 1/10W 100	1	
R371	ERJ6GEYG683	M.RESISTOR CH 1/10W 68K	1	
R372	ERJ6GEYG332	M.RESISTOR CH 1/10W 3.3K	1	
R373	ERJ6GEYG562	M.RESISTOR CH 1/10W 5.6K	1	
R374,75	ERJ6GEYG223	M.RESISTOR CH 1/10W 22K	2	
R376	ERJ6GEYG332	M.RESISTOR CH 1/10W 3.3K	1	
R396	ERJ6GEYG332	M.RESISTOR CH 1/10W 3.3K	1	
R397	ERJ6GEYG472	M.RESISTOR CH 1/10W 4.7K	1	
R398	ERJ6GEYG153	M.RESISTOR CH 1/10W 15K	1	
R399	ERJ6GEYG221	M.RESISTOR CH 1/10W 220	1	
R400	ERJ6GEYG472	M.RESISTOR CH 1/10W 4.7K	1	
R401,02	ERJ6GEYG102	M.RESISTOR CH 1/10W 1K	2	
R404	ERJ6GEYG102	M.RESISTOR CH 1/10W 1K	1	
R405,06	ERJ6GEYG221	M.RESISTOR CH 1/10W 220	2	
R409	VRE0034E391	M.RESISTOR CH 1/10W 390	1	
R410	ERJ6GEY0R00	M.RESISTOR CH 1/10W 0	1	
R411	ERJ6GEYG221	M.RESISTOR CH 1/10W 220	1	
R412	VRE0034E391	M.RESISTOR CH 1/10W 390	1	
R413-16	ERJ6GEYG223	M.RESISTOR CH 1/10W 22K	4	

Ref.No.	Part No.	Part Name & Description	Pcs	Remarks
R417	VRE0034E391	M.RESISTOR CH 1/10W 390	1	
R418	ERJ6GEYG151	M.RESISTOR CH 1/10W 150	1	
R421	ERJ6GEYG221	M.RESISTOR CH 1/10W 220	1	
R422	VRE0034E391	M.RESISTOR CH 1/10W 390	1	
R423	ERJ6GEY0R00	M.RESISTOR CH 1/10W 0	1	
R424	ERJ6GEYG101	M.RESISTOR CH 1/10W 100	1	
R425,26	ERJ6GEYG470	M.RESISTOR CH 1/10W 47	2	
R427	ERJ6GEYG221	M.RESISTOR CH 1/10W 220	1	
R428	VRE0034E391	M.RESISTOR CH 1/10W 390	1	
R429	ERJ6GEYG392	M.RESISTOR CH 1/10W 3.9K	1	
R430	ERJ6GEYG102	M.RESISTOR CH 1/10W 1K	1	
R431	VRE0034E821	M.RESISTOR CH 1/10W 820	1	
R432	ERJ6GEYG102	M.RESISTOR CH 1/10W 1K	1	
R433	ERJ6GEYG152	M.RESISTOR CH 1/10W 1.5K	1	
R434	ERJ6GEYG123	M.RESISTOR CH 1/10W 12K	1	
R435	ERJ6GEYG682	M.REISITOR CH 1/10W 6.8K	1	
R436	ERJ6GEYG822	M.RESISTOR CH 1/10W 8.2K	1	
R437	ERJ6GEYG123	M.RESISTOR CH 1/10W 12K	1	
R438	ERJ6GEYG152	M.RESISTOR CH 1/10W 1.5K	1	
R439	ERJ6GEYG102	M.RESISTOR CH 1/10W 1K	1	
R440	VRE0034E821	M.RESISTOR CH 1/10W 820	1	
R441	ERJ6GEYG102	M.RESISTOR CH 1/10W 1K	1	
R442	ERJ6GEYG222	M.RESISTOR CH 1/10W 2.2K	1	
R443	ERJ6GEY0R00	M.RESISTOR CH 1/10W 0	1	
R501	ERJ6GEYG102	M.RESISTOR CH 1/10W 1K	1	
R502	ERJ6GEYG330	M.RESISTOR CH 1/10W 33	1	
R503,04	ERJ6GEYG222	M.RESISTOR CH 1/10W 2.2K	2	
R505,06	ERJ6GEYG102	M.RESISTOR CH 1/10W 1K	2	
R507	ERJ6GEYG331	M.RESISTOR CH 1/10W 330	1	
R508	ERJ6GEYG221	M.RESISTOR CH 1/10W 220	1	
R509	ERJ6GEYG152	M.RESISTOR CH 1/10W 1.5K	1	
R510	ERJ6GEYG391	M.RESISTOR CH 1/10W 390	1	
R511	ERJ6GEYG102	M.RESISTOR CH 1/10W 1K	1	
R512	ERJ6GEYG152	M.RESISTOR CH 1/10W 1.5K	1	
R513	ERJ6GEYG683	M.RESISTOR CH 1/10W 68K	1	
R514	ERJ6GEYG182	M.RESISTOR CH 1/10W 1.8K	1	
R515	ERJ6GEYG101	M.RESISTOR CH 1/10W 100	1	
R516	ERJ6GEYG152	M.RESISTOR CH 1/10W 1.5K	1	
R517	ERJ6GEYG470	M.RESISTOR CH 1/10W 47	1	
R518	ERJ6GEYG273	M.RESISTOR CH 1/10W 27K	1	
R519	ERJ6GEYG331	M.RESISTOR CH 1/10W 330	1	
R520	ERJ6GEYG681	M.RESISTOR CH 1/10W 680	1	
R521	ERJ6GEYG391	M.RESISTOR CH 1/10W 390	1	
R522	ERJ6GEYG102	M.RESISTOR CH 1/10W 1K	1	
R523	ERJ6GEYG681	M.RESISTOR CH 1/10W 680	1	
R524	ERJ6GEYG561	M.RESISTOR CH 1/10W 560	1	
R525	ERJ6GEYG182	M.RESISTOR CH 1/10W 1.8K	1	
R526	ERJ6GEYG470	M.RESISTOR CH 1/10W 47	1	
R527	ERJ6GEYG182	M.RESISTOR CH 1/10W 1.8K	1	
R528	VRE0034E151	M.RESISTOR CH 1/10W 150	1	
R529	ERJ6GEYG152	M.RESISTOR CH 1/10W 1.5K	1	
R530	ERJ6GEYG470	M.RESISTOR CH 1/10W 47	1	
R542	ERJ6GEYG821	M.RESISTOR CH 1/10W 820	1	
R543	ERJ6GEYG392	M.RESISTOR CH 1/10W 3.9K	1	
R544	ERJ6GEYG561	M.RESISTOR CH 1/10W 560	1	
R545	ERJ6GEYG391	M.RESISTOR CH 1/10W 390	1	
R546	ERJ6GEYG561	M.RESISTOR CH 1/10W 560	1	
R547	ERJ6GEYG391	M.RESISTOR CH 1/10W 390	1	
R549	ERJ6GEYG273	M.RESISTOR CH 1/10W 27K	1	
R551	ERJ6GEYG391	M.RESISTOR CH 1/10W 390	1	
R552	ERJ6GEYG102	M.RESISTOR CH 1/10W 1K	1	
R553	ERJ6GEYG681	M.RESISTOR CH 1/10W 680	1	
R554	ERJ6GEYG561	M.RESISTOR CH 1/10W 560	1	
R555	ERJ6GEYG182	M.RESISTOR CH 1/10W 1.8K	1	
R556	ERJ6GEYG470	M.RESISTOR CH 1/10W 47	1	
R557	ERJ6GEYG182	M.RESISTOR CH 1/10W 1.8K	1	
R558	VRE0034E151	M.RESISTOR CH 1/10W 150	1	
R559	ERJ6GEYG152	M.RESISTOR CH 1/10W 1.5K	1	
R560	ERJ6GEYG470	M.RESISTOR CH 1/10W 47	1	
R564	ERJ6GEYG102	M.RESISTOR CH 1/10W 1K	1	
R565	ERJ6GEYG222	M.RESISTOR CH 1/10W 2.2K	1	
R566	ERJ6GEYG182	M.RESISTOR CH 1/10W 1.8K	1	
R567	ERJ6GEYG221	M.RESISTOR CH 1/10W 220	1	
R568	ERJ6GEYG470	M.RESISTOR CH 1/10W 47	1	
R569	ERJ6GEYG153	M.RESISTOR CH 1/10W 15K	1	

Ref.No.	Part No.	Part Name & Description	Pcs	Remarks
R570	ERJ6GEYG223	M.RESISTOR CH 1/10W 22K	1	
R571	ERJ6GEYG470	M.RESISTOR CH 1/10W 47	1	
R572	ERJ6GEYG472	M.RESISTOR CH 1/10W 4.7K	1	
R573,74	ERJ6GEYG102	M.RESISTOR CH 1/10W 1K	2	
R576	ERJ6GEYG103	M.RESISTOR CH 1/10W 10K	1	
R577	ERJ6GEYG102	M.RESISTOR CH 1/10W 1K	1	
R578	ERJ6GEYG472	M.RESISTOR CH 1/10W 4.7K	1	
R579,80	ERJ6GEYG121	M.RESISTOR CH 1/10W 120	2	
R581,82	ERJ6GEYG821	M.RESISTOR CH 1/10W 820	2	
R583	ERJ6GEYG470	M.RESISTOR CH 1/10W 47	1	
R584	ERJ6GEYG153	M.RESISTOR CH 1/10W 15K	1	
R585	ERJ6GEYG223	M.RESISTOR CH 1/10W 22K	1	
R586	ERJ6GEYG470	M.RESISTOR CH 1/10W 47	1	
R587	ERJ6GEYG472	M.RESISTOR CH 1/10W 4.7K	1	
R588	ERJ6GEYG102	M.RESISTOR CH 1/10W 1K	1	
R590	ERJ6GEYG103	M.RESISTOR CH 1/10W 10K	1	
R591	ERJ6GEYG102	M.RESISTOR CH 1/10W 1K	1	
R592	ERJ6GEYG472	M.RESISTOR CH 1/10W 4.7K	1	
R593,94	ERJ6GEYG121	M.RESISTOR CH 1/10W 120	2	
R595,96	ERJ6GEYG821	M.RESISTOR CH 1/10W 820	2	
R597	ERJ6GEYG102	M.RESISTOR CH 1/10W 1K	1	
R598	ERJ6GEYG103	M.RESISTOR CH 1/10W 10K	1	
R599	ERJ6GEYG822	M.RESISTOR CH 1/10W 8.2K	1	
R600	ERJ6GEYG102	M.RESISTOR CH 1/10W 1K	1	
R601,02	VRE0034E301	M.RESISTOR CH 1/10W 300	2	
R603	ERJ6GEYG152	M.RESISTOR CH 1/10W 1.5K	1	
R604	ERJ6GEYG151	M.RESISTOR CH 1/10W 150	1	
R605	ERJ6GEYG102	M.RESISTOR CH 1/10W 1K	1	
R606	ERJ6GEYG182	M.RESISTOR CH 1/10W 1.8K	1	
R607	ERJ6GEYG332	M.RESISTOR CH 1/10W 3.3K	1	
R608	ERJ6GEYG470	M.RESISTOR CH 1/10W 47	1	
R609,10	ERJ6GEYG122	M.RESISTOR CH 1/10W 1.2K	2	
R611	ERJ6GEY0R00	M.RESISTOR CH 1/10W 0	1	
R612	ERJ6GEYG272	M.RESISTOR CH 1/10W 2.7K	1	
R613	ERJ6GEYG182	M.RESISTOR CH 1/10W 1.8K	1	
R614	ERJ6GEYG392	M.RESISTOR CH 1/10W 3.9K	1	
R615	ERJ6GEYG151	M.RESISTOR CH 1/10W 150	1	
R616	ERJ6GEYG222	M.RESISTOR CH 1/10W 2.2K	1	
R617	ERJ6GEYG330	M.RESISTOR CH 1/10W 33	1	
R618	ERJ6GEYG222	M.RESISTOR CH 1/10W 2.2K	1	
R619	ERJ6GEYG102	M.RESISTOR CH 1/10W 1K	1	
R620	ERJ6GEYG181	M.RESISTOR CH 1/10W 180	1	
R621	ERJ6GEYG821	M.RESISTOR CH 1/10W 820	1	
R622	ERJ6GEYG152	M.RESISTOR CH 1/10W 1.5K	1	
R623	ERJ6GEYG470	M.RESISTOR CH 1/10W 47	1	
R630	ERJ6GEYG272	M.RESISTOR CH 1/10W 2.7K	1	
R633	ERJ6GEY0R00	M.RESISTOR CH 1/10W 0	1	
R634	ERJ6GEYG683	M.RESISTOR CH 1/10W 68K	1	
R635	ERJ6GEYG104	M.RESISTOR CH 1/10W 100K	1	
R636	ERJ6GEYG562	M.RESISTOR CH 1/10W 5.6K	1	
R637	ERJ6GEYG183	M.RESISTOR CH 1/10W 18K	1	
R642	ERJ6GEYG332	M.RESISTOR CH 1/10W 3.3K	1	
R643	ERJ6GEYG822	M.RESISTOR CH 1/10W 8.2K	1	
R644	ERJ6GEYG133	M.RESISTOR CH 1/10W 13K	1	
R645	ERJ6GEYG182	M.RESISTOR CH 1/10W 1.8K	1	
R646	ERJ6GEYG681	M.RESISTOR CH 1/10W 680	1	
R647	ERJ6GEYG471	M.RESISTOR CH 1/10W 470	1	
R648,49	ERJ6GEYG473	M.RESISTOR CH 1/10W 47K	2	
R650	ERJ6GEYG221	M.RESISTOR CH 1/10W 220	1	
R651	ERJ6GEYG682	M.REISITOR CH 1/10W 6.8K	1	
R652	ERJ6GEYG182	M.RESISTOR CH 1/10W 1.8K	1	
R653	ERJ6GEYG122	M.RESISTOR CH 1/10W 1.2K	1	
R654,55	ERJ6GEYG101	M.RESISTOR CH 1/10W 100	2	
R656	ERJ6GEYG122	M.RESISTOR CH 1/10W 1.2K	1	
R657	ERJ6GEYG182	M.RESISTOR CH 1/10W 1.8K	1	
R658	ERJ6GEYG102	M.RESISTOR CH 1/10W 1K	1	
R659	ERJ6GEYG681	M.RESISTOR CH 1/10W 680	1	
R660	ERJ6GEYG102	M.RESISTOR CH 1/10W 1K	1	
R661	ERJ6GEYG222	M.RESISTOR CH 1/10W 2.2K	1	
R662	ERJ6GEYG182	M.RESISTOR CH 1/10W 1.8K	1	
R663	ERJ6GEYG222	M.RESISTOR CH 1/10W 2.2K	1	
R664	ERJ6GEYG682	M.REISITOR CH 1/10W 6.8K	1	
R665	ERJ6GEYG122	M.RESISTOR CH 1/10W 1.2K	1	
R666	ERJ6GEYG102	M.RESISTOR CH 1/10W 1K	1	
R667	ERJ6GEYG182	M.RESISTOR CH 1/10W 1.8K	1	

Ref.No.	Part No.	Part Name & Description	Pcs	Remarks
R668	ERJ6GEYG102	M.RESISTOR CH 1/10W 1K	1	
R669	ERJ6GEYG681	M.RESISTOR CH 1/10W 680	1	
R670	ERJ6GEYG331	M.RESISTOR CH 1/10W 330	1	
R671	ERJ6GEYG152	M.RESISTOR CH 1/10W 1.5K	1	
R672,73	ERJ6GEYG102	M.RESISTOR CH 1/10W 1K	2	
R674	ERJ6GEYG561	M.RESISTOR CH 1/10W 560	1	
R675	ERJ6GEY0R00	M.RESISTOR CH 1/10W 0	1	
R676	ERJ6GEYG152	M.RESISTOR CH 1/10W 1.5K	1	
R677	ERJ6GEYG102	M.RESISTOR CH 1/10W 1K	1	
R678	ERJ6GEYG152	M.RESISTOR CH 1/10W 1.5K	1	
R679	ERJ6GEYG102	M.RESISTOR CH 1/10W 1K	1	
R680	ERJ6GEYG561	M.RESISTOR CH 1/10W 560	1	
R681	ERJ6GEYG330	M.RESISTOR CH 1/10W 33	1	
R682	ERJ6GEYG681	M.RESISTOR CH 1/10W 680	1	
R683	ERJ6GEYG124	M.RESISTOR CH 1/10W 120K	1	
R684	ERJ6GEYG152	M.RESISTOR CH 1/10W 1.5K	1	
R685	ERJ6GEYG102	M.RESISTOR CH 1/10W 1K	1	
R686	ERJ6GEYG181	M.RESISTOR CH 1/10W 180	1	
R687	ERJ6GEYG102	M.RESISTOR CH 1/10W 1K	1	
R688	ERJ6GEYG561	M.RESISTOR CH 1/10W 560	1	
R689	ERJ6GEYG152	M.RESISTOR CH 1/10W 1.5K	1	
R690,91	ERJ6GEYG122	M.RESISTOR CH 1/10W 1.2K	2	
R692,93	ERJ6GEYG470	M.RESISTOR CH 1/10W 47	2	
R694,95	ERJ6GEYG102	M.RESISTOR CH 1/10W 1K	2	
R696,97	ERJ6GEYG122	M.RESISTOR CH 1/10W 1.2K	2	
R698,99	ERJ6GEYG470	M.RESISTOR CH 1/10W 47	2	
R700,01	ERJ6GEYG102	M.RESISTOR CH 1/10W 1K	2	
R702	ERJ6GEYG103	M.RESISTOR CH 1/10W 10K	1	
R703	ERJ6GEYG472	M.RESISTOR CH 1/10W 4.7K	1	
R704-07	ERJ6GEYG102	M.RESISTOR CH 1/10W 1K	4	
R709	ERJ6GEY0R00	M.RESISTOR CH 1/10W 0	1	
R711	ERJ6GEY0R00	M.RESISTOR CH 1/10W 0	1	
R714,15	ERJ6GEY0R00	M.RESISTOR CH 1/10W 0	2	
R716	ERJ6GEYG101	M.RESISTOR CH 1/10W 100	1	
R717	ERJ6GEYG122	M.RESISTOR CH 1/10W 1.2K	1	
R718	ERJ6GEYG154	M.RESISTOR CH 1/10W 150K	1	
R719	ERJ6GEYG102	M.RESISTOR CH 1/10W 1K	1	
R720	ERJ6GEYG681	M.RESISTOR CH 1/10W 680	1	
R721	ERJ6GEYG470	M.RESISTOR CH 1/10W 47	1	
R722	ERJ6GEYG182	M.RESISTOR CH 1/10W 1.8K	1	
R723	VRE0034E151	M.RESISTOR CH 1/10W 150	1	
R724	ERJ6GEYG152	M.RESISTOR CH 1/10W 1.5K	1	
R725	ERJ6GEYG470	M.RESISTOR CH 1/10W 47	1	
R726	ERJ6GEYG472	M.RESISTOR CH 1/10W 4.7K	1	
R727	ERJ6GEYG103	M.RESISTOR CH 1/10W 10K	1	
R728	ERJ6GEYG561	M.RESISTOR CH 1/10W 560	1	
R729	ERJ6GEYG391	M.RESISTOR CH 1/10W 390	1	
R730	ERJ6GEYG561	M.RESISTOR CH 1/10W 560	1	
R731	ERJ6GEYG391	M.RESISTOR CH 1/10W 390	1	
R732	ERJ6GEYG561	M.RESISTOR CH 1/10W 560	1	
R733	ERJ6GEYG391	M.RESISTOR CH 1/10W 390	1	
R734	ERJ6GEYG561	M.RESISTOR CH 1/10W 560	1	
R735	ERJ6GEYG391	M.RESISTOR CH 1/10W 390	1	
R736	ERJ6GEYG101	M.RESISTOR CH 1/10W 100	1	
R737	ERJ6GEYG122	M.RESISTOR CH 1/10W 1.2K	1	
R739,40	ERJ6GEYG152	M.RESISTOR CH 1/10W 1.5K	2	
R741	ERJ6GEYG105	M.RESISTOR CH 1/10W 1M	1	
R742	ERJ6GEYG122	M.RESISTOR CH 1/10W 1.2K	1	
R743	ERJ6GEYG472	M.RESISTOR CH 1/10W 4.7K	1	
R744	ERJ6GEY0R00	M.RESISTOR CH 1/10W 0	1	
R800	ERJ6GEYG223	M.RESISTOR CH 1/10W 22K	1	
R801	ERJ6GEYG562	M.RESISTOR CH 1/10W 5.6K	1	
R802	ERJ6GEYG331	M.RESISTOR CH 1/10W 330	1	
R803	ERJ6GEYG103	M.RESISTOR CH 1/10W 10K	1	
R804	ERJ6GEYG183	M.RESISTOR CH 1/10W 18K	1	
R805	ERJ6GEYG102	M.RESISTOR CH 1/10W 1K	1	
R806	ERJ6GEYG472	M.RESISTOR CH 1/10W 4.7K	1	
R807	ERJ6GEYG152	M.RESISTOR CH 1/10W 1.5K	1	
R808-10	ERJ6GEYG122	M.RESISTOR CH 1/10W 1.2K	3	
R811	ERJ6GEYG222	M.RESISTOR CH 1/10W 2.2K	1	
R812-14	ERJ6GEYG122	M.RESISTOR CH 1/10W 1.2K	3	
R815	ERJ6GEYG222	M.RESISTOR CH 1/10W 2.2K	1	
R816	ERJ6GEYG122	M.RESISTOR CH 1/10W 1.2K	1	
R817	ERJ6GEYG392	M.RESISTOR CH 1/10W 3.9K	1	
R819,20	ERJ6GEYG103	M.RESISTOR CH 1/10W 10K	2	

Ref.No.	Part No.	Part Name & Description	Pcs	Remarks
R821	ERJ6GEYG392	M.RESISTOR CH 1/10W 3.9K	1	
R822,23	ERJ6GEYG103	M.RESISTOR CH 1/10W 10K	2	
R826	ERJ6GEYG153	M.RESISTOR CH 1/10W 15K	1	
R827	ERJ6GEYG392	M.RESISTOR CH 1/10W 3.9K	1	
R828	ERJ6GEYG562	M.RESISTOR CH 1/10W 5.6K	1	
R829	ERJ6GEYG103	M.RESISTOR CH 1/10W 10K	1	
R830	ERJ6GEYG122	M.RESISTOR CH 1/10W 1.2K	1	
R831	ERJ6GEYG222	M.RESISTOR CH 1/10W 2.2K	1	
R832	ERJ6GEYG392	M.RESISTOR CH 1/10W 3.9K	1	
R833	ERJ6GEYG122	M.RESISTOR CH 1/10W 1.2K	1	
R834	ERJ6GEYG182	M.RESISTOR CH 1/10W 1.8K	1	
R835	ERJ6GEYG392	M.RESISTOR CH 1/10W 3.9K	1	
R836	ERJ6GEYG682	M.REISITOR CH 1/10W 6.8K	1	
R837	ERJ6GEYG392	M.RESISTOR CH 1/10W 3.9K	1	
R838	ERJ6GEYG682	M.REISITOR CH 1/10W 6.8K	1	
R839,40	ERJ6GEYG392	M.RESISTOR CH 1/10W 3.9K	2	
R841	ERJ6GEYG682	M.REISITOR CH 1/10W 6.8K	1	
R842	ERJ6GEYG392	M.RESISTOR CH 1/10W 3.9K	1	
R843	ERJ6GEYG682	M.REISITOR CH 1/10W 6.8K	1	
R844-46	ERJ6GEYG392	M.RESISTOR CH 1/10W 3.9K	3	
R847	ERJ6GEY0R00	M.RESISTOR CH 1/10W 0	1	
R848	ERJ6GEYG102	M.RESISTOR CH 1/10W 1K	1	
R849	ERJ6GEY0R00	M.RESISTOR CH 1/10W 0	1	
R850	ERJ6GEYG102	M.RESISTOR CH 1/10W 1K	1	
R851	ERJ6GEY0R00	M.RESISTOR CH 1/10W 0	1	
R852	ERJ6GEYG102	M.RESISTOR CH 1/10W 1K	1	
R853	ERJ6GEY0R00	M.RESISTOR CH 1/10W 0	1	
R854	ERJ6GEYG102	M.RESISTOR CH 1/10W 1K	1	
R855	ERJ6GEY0R00	M.RESISTOR CH 1/10W 0	1	
R856	ERJ6GEYG102	M.RESISTOR CH 1/10W 1K	1	
R857	ERJ6GEY0R00	M.RESISTOR CH 1/10W 0	1	
R858	ERJ6GEYG102	M.RESISTOR CH 1/10W 1K	1	
R859-62	ERJ6GEY0R00	M.RESISTOR CH 1/10W 0	4	
R867	ERJ6GEYG104	M.RESISTOR CH 1/10W 100K	1	
R868	ERJ6GEYG562	M.RESISTOR CH 1/10W 5.6K	1	
R869	ERJ6GEYG273	M.RESISTOR CH 1/10W 27K	1	
R870	ERJ6GEYG472	M.RESISTOR CH 1/10W 4.7K	1	
R871	ERJ6GEYG562	M.RESISTOR CH 1/10W 5.6K	1	
R872	ERJ6GEYG273	M.RESISTOR CH 1/10W 27K	1	
R873	ERJ6GEY0R00	M.RESISTOR CH 1/10W 0	1	
R876	ERJ6GEY0R00	M.RESISTOR CH 1/10W 0	1	
R878	ERJ6GEY0R00	M.RESISTOR CH 1/10W 0	1	
R880	ERJ6GEY0R00	M.RESISTOR CH 1/10W 0	1	
R882	ERJ6GEY0R00	M.RESISTOR CH 1/10W 0	1	
R883,84	ERJ6GEYG103	M.RESISTOR CH 1/10W 10K	2	
R886,87	ERJ6GEY0R00	M.RESISTOR CH 1/10W 0	2	
R889,90	ERJ6GEYG392	M.RESISTOR CH 1/10W 3.9K	2	
R891	ERJ6GEYG563	M.RESISTOR CH 1/10W 56K	1	
R892	ERJ6GEYG472	M.RESISTOR CH 1/10W 4.7K	1	
R893	ERJ6GEYG272	M.RESISTOR CH 1/10W 2.7K	1	
R894	ERJ6GEYG102	M.RESISTOR CH 1/10W 1K	1	
R895	ERJ6GEYG103	M.RESISTOR CH 1/10W 10K	1	
R896	ERJ6GEYG122	M.RESISTOR CH 1/10W 1.2K	1	
R897	ERJ6GEYG222	M.RESISTOR CH 1/10W 2.2K	1	
R898,99	ERJ6GEYG273	M.RESISTOR CH 1/10W 27K	2	
R900	ERJ6GEYG332	M.RESISTOR CH 1/10W 3.3K	1	
R901-05	ERJ6GEYG103	M.RESISTOR CH 1/10W 10K	5	
R906	ERJ6GEYG224	M.RESISTOR CH 1/10W 220K	1	
R907-09	ERJ6GEYG103	M.RESISTOR CH 1/10W 10K	3	
R910	ERJ6GEYG152	M.RESISTOR CH 1/10W 1.5K	1	
R911	ERJ6GEYG392	M.RESISTOR CH 1/10W 3.9K	1	
R912-16	ERJ6GEYG103	M.RESISTOR CH 1/10W 10K	5	
R917	ERJ6GEYG562	M.RESISTOR CH 1/10W 5.6K	1	
R925,26	ERJ6GEYG122	M.RESISTOR CH 1/10W 1.2K	2	
R928	ERJ6GEYG562	M.RESISTOR CH 1/10W 5.6K	1	
R929,30	ERJ6GEYG392	M.RESISTOR CH 1/10W 3.9K	2	
R1001	ERJ6GEYG681	M.RESISTOR CH 1/10W 680	1	
R1002	ERJ6GEYG621	M.RESISTOR CH 1/10W 620	1	
SW201	VSS0207	SWITCH	1	
SW202,03	VJP1990	CONNECTOR	2	
SW800	VSS0126	SWITCH	1	
SW801	VJP1990	CONNECTOR	1	

Ref.No.	Part No.	Part Name & Description	Pcs	Remarks
SWS801	VJS1990	CONNECTOR	1	
TH501-04	ERTD2FGL102S	THERMISTOR 1K	4	
TP1-P4	VJR0646	TEST POINT	4	
TP6,P7	VJR0646	TEST POINT	2	
TP201-04	VJR0646	TEST POINT	4	
TP206	VJR0646	TEST POINT	1	
TP501-03	VJR0646	TEST POINT	3	
TP505-07	VJR0646	TEST POINT	3	
TP800-03	VJR0646	TEST POINT	4	
TP805	VJR0646	TEST POINT	1	
TPG1,G2	VJR0646	TEST POINT	2	
TPG201	VJR0646	TEST POINT	1	
TPG501	VJR0646	TEST POINT	1	
VC201	ECV1ZW20X60	V.CAPACITOR 20P	1	
VC501	ECV1ZW30X53	V.CAPACITOR 30P	1	
VR1	VRV0109B201	V.RESISTOR 200	1	
VR2	VRV0109B502	V.RESISTOR 5K	1	
VR3	VRV0109B501	V.RESISTOR 500	1	
VR4	VRV0109B502	V.RESISTOR 5K	1	
VR200	VRV0064B501	V.RESISTOR 500	1	
VR201	VRV0064B503	V.RESISTOR 50K	1	
VR202	VRV0064B103	V.RESISTOR 10K	1	
VR203	VRV0109B501	V.RESISTOR 500	1	
VR204	VRV0109B503	V.RESISTOR 50K	1	
VR205	VRV0109B501	V.RESISTOR 500	1	
VR206	VRV0109B503	V.RESISTOR 50K	1	
VR207	VRV0109B102	V.RESISTOR 1K	1	
VR208,09	VRV0109B501	V.RESISTOR 500	2	
VR210-13	VRV0109B102	V.RESISTOR 1K	4	
VR501	VRV0109B501	V.RESISTOR 500	1	
VR502	VRV0109B503	V.RESISTOR 50K	1	
VR503-06	VRV0064B503	V.RESISTOR 50K	4	
VR507	VRV0109B201	V.RESISTOR 200	1	
VR508	VRV0109B101	V.RESISTOR 100	1	
VR509	VRV0109B201	V.RESISTOR 200	1	
VR510	VRV0109B203	V.RESISTOR 20K	1	
VR511	VRV0109B502	V.RESISTOR 5K	1	
VR512	VRV0064B503	V.RESISTOR 50K	1	
VR513,14	VRV0109B102	V.RESISTOR 1K	2	
VR515,16	VRV0109B501	V.RESISTOR 500	2	
VR517	VRV0064B503	V.RESISTOR 50K	1	
VR800,01	VRV0109B202	V.RESISTOR 2K	1	
VR802,03	VRV0109B203	V.RESISTOR 20K	2	
		MISCELLANEOUS		
	VML2143	CARD PULLER	1	
	VML2144	CARD PULLER	1	
	VMZ1547	BARRIER	1	
	VXA3966	P.C.B. SHIELD PLATE	1	
	XNG26E	NUT	4	
	XYNV3+K6FR	SCREW	5	
	XYN26+C12	SCREW	4	

Ref.No.		Part No.	Part Name & Description	Pcs	Remarks
	■	VEP83098E	P.C.BOARD W/COMPONENT		FOR AU-65H
			W3 MOD & DEMOD		
			CAPACITORS		
C1,C2		ECEA1CU101	E.CAPACITOR 16V 100U	2	
C3		ECUM1E104ZFN	C.CAPACITOR CH 25V 0.1U	1	
C4		ECUM1H470JCN	C.CAPACITOR CH 50V 47P	1	
C5		ECUM1H020CCN	C.CAPACITOR CH 50V 2P	1	
C6		ECUM1H080DCN	C.CAPACITOR CH 50V 80P	1	
C7		ECUM1E104ZFN	C.CAPACITOR CH 25V 0.1U	1	
C10,11		ECUM1E104ZFN	C.CAPACITOR CH 25V 0.1U	2	
C12,13		ECUM1H103KBN	C.CAPACITOR CH 50V 0.01U	2	
C14		ECEA0JU470	E.CAPACITOR 6.3V 47U	1	
C15		VCM0028	M.CAPACITOR 342P	1	
C16		ECEA0JU470	E.CAPACITOR 6.3V 47U	1	
C17		VCM0027	M.CAPACITOR 301P	1	
C18-20		ECUM1H120JCN	C.CAPACITOR CH 50V 12P	3	
C21		ECUM1H560JCN	C.CAPACITOR CH 50V 56P	1	
C22		ECUM1H150JCN	C.CAPACITOR CH 50V 15P	1	
C23		ECUM1H221JCN	C.CAPACITOR CH 50V 220P	1	
C24		ECUM1H104KBM	C.CAPACITOR CH 50V 0.1U	1	
C25		ECUM1C104KBN	C.CAPACITOR CH 16V 0.1U	1	
C26		ECUM1H331JCN	C.CAPACITOR CH 50V 330P	1	
C27		ECUM1E104ZFN	C.CAPACITOR CH 25V 0.1U	1	
C28		ECUM1H472KBN	C.CAPACITOR CH 50V 4700P	1	
C29,30		ECUM1E104ZFN	C.CAPACITOR CH 25V 0.1U	2	
C31		ECEA1HUR47	E.CAPACITOR 50V 0.47U	1	
C32		VCM0047	M.CAPACITOR	1	
C33		ECUM1H103KBN	C.CAPACITOR CH 50V 0.01U	1	
C34		ECEA1AU221	E.CAPACITOR 10V 220U	1	
C35		ECUM1E104ZFN	C.CAPACITOR CH 25V 0.1U	1	
C36		ECUM1H270JUN	C.CAPACITOR CH 50V 27P	1	
C37		ECUM1H103KBN	C.CAPACITOR CH 50V 0.01U	1	
C38		ECUM1E104ZFN	C.CAPACITOR CH 25V 0.1U	1	
C39		ECUM1H390JCN	C.CAPACITOR CH 50V 39P	1	
C40		ECUM1H101JCN	C.CAPACITOR CH 50V 100P	1	
C42		ECEA1CU470	E.CAPACITOR 16V 47U	1	
C43,44		ECUM1H103KBN	C.CAPACITOR CH 50V 0.01U	2	
C45,46		ECUM1E104ZFN	C.CAPACITOR CH 25V 0.1U	2	
C47		ECUM1H221JCN	C.CAPACITOR CH 50V 220P	1	
C48		ECUM1H103KBN	C.CAPACITOR CH 50V 0.01U	1	
C49		ECUM1H332KBN	C.CAPACITOR CH 50V 3300P	1	
C50,51		ECUM1H560JCN	C.CAPACITOR CH 50V 56P	2	
C52		ECUM1E104ZFN	C.CAPACITOR CH 25V 0.1U	1	
C54		ECUM1H471JCN	C.CAPACITOR CH 50V 470P	1	
C55		ECUM1H270JCN	C.CAPACITOR CH 50V 27P	1	
C56		ECUM1E104ZFN	C.CAPACITOR CH 25V 0.1U	1	
C57		ECEA1CU101	E.CAPACITOR 16V 100U	1	
C60		ECUM1E104ZFN	C.CAPACITOR CH 25V 0.1U	1	
C61		ECEA1CU101	E.CAPACITOR 16V 100U	1	
C62		ECUM1E104ZFN	C.CAPACITOR CH 25V 0.1U	1	
C63		ECEA1CU101	E.CAPACITOR 16V 100U	1	
C64		ECUM1E104ZFN	C.CAPACITOR CH 25V 0.1U	1	
C65		ECSF1CE106	E.CAPACITOR 16V 10U	1	
C66		ECUM1E104ZFN	C.CAPACITOR CH 25V 0.1U	1	
C67		ECSF1CE106	E.CAPACITOR 16V 10U	1	
C68		ECUM1E104ZFN	C.CAPACITOR CH 25V 0.1U	1	
C69,70		ECSF1CE106	E.CAPACITOR 16V 10U	2	
C71		ECUM1E104ZFN	C.CAPACITOR CH 25V 0.1U	1	
C72		ECEA1CU101	E.CAPACITOR 16V 100U	1	
C73,74		ECUM1E104ZFN	C.CAPACITOR CH 25V 0.1U	2	
C201,02		ECEA1CU101	E.CAPACITOR 16V 100U	2	
C203		ECUM1H470JCN	C.CAPACITOR CH 50V 47P	1	
C204		ECUM1H020CCN	C.CAPACITOR CH 50V 2P	1	
C205,06		ECUM1E104ZFN	C.CAPACITOR CH 25V 0.1U	2	
C207		ECEA1AU101	E.CAPACITOR 10V 100U	1	
C208		VCM0028	M.CAPACITOR 342P	1	
C209		VCM0027	M.CAPACITOR 301P	1	

Ref.No.		Part No.	Part Name & Description	Pcs	Remarks
C210-12		ECUM1H120JCN	C.CAPACITOR CH 50V 12P	3	
C215		ECUM1H180JCN	C.CAPACITOR CH 50V 18P	1	
C216		ECUM1H560JCN	C.CAPACITOR CH 50V 56P	1	
C217		ECUM1H103KBN	C.CAPACITOR CH 50V 0.01U	1	
C218,19		ECUM1E104ZFN	C.CAPACITOR CH 25V 0.1U	2	
C220,21		ECUM1H103KBN	C.CAPACITOR CH 50V 0.01U	2	
C222		ECEA1HUR47	E.CAPACITOR 50V 0.47U	1	
C223		ECUM1E104ZFN	C.CAPACITOR CH 25V 0.1U	1	
C224		ECUM1H271JCN	C.CAPACITOR CH 50V 270P	1	
C225		ECUM1H560JCN	C.CAPACITOR CH 50V 56P	1	
C226		VCM0023	M.CAPACITOR 379P	1	
C227		ECUM1E104ZFN	C.CAPACITOR CH 25V 0.1U	1	
C228		ECUM1H103KBN	C.CAPACITOR CH 50V 0.01U	1	
C229		ECEA1AU221	E.CAPACITOR 10V 220U	1	
C230		ECUM1E104ZFN	C.CAPACITOR CH 25V 0.1U	1	
C231		ECUM1H220JUN	C.CAPACITOR CH 50V 22P	1	
C232		ECUM1H103KBN	C.CAPACITOR CH 50V 0.01U	1	
C233		ECUM1H120JCN	C.CAPACITOR CH 50V 12P	1	
C234		ECUM1H180JCN	C.CAPACITOR CH 50V 18P	1	
C235		ECUM1H470JCN	C.CAPACITOR CH 50V 47P	1	
C236		ECUM1H050DCN	C.CAPACITOR CH 50V 50P	1	
C237		ECUM1H220JCN	C.CAPACITOR CH 50V 22P	1	
C238		ECUM1H180JCN	C.CAPACITOR CH 50V 18P	1	
C239		ECUM1H101JCN	C.CAPACITOR CH 50V 100P	1	
C240		ECUM1H050DCN	C.CAPACITOR CH 50V 50P	1	
C241		ECUM1H220JCN	C.CAPACITOR CH 50V 22P	1	
C242		ECUM1H221JCN	C.CAPACITOR CH 50V 220P	1	
C243		ECUM1E104ZFN	C.CAPACITOR CH 25V 0.1U	1	
C244		ECUM1H103KBN	C.CAPACITOR CH 50V 0.01U	1	
C245		ECEA1CU470	E.CAPACITOR 16V 47U	1	
C246-48		ECUM1E104ZFN	C.CAPACITOR CH 25V 0.1U	3	
C252,53		ECUM1H103KBN	C.CAPACITOR CH 50V 0.01U	2	
C254		ECEA1CU470	E.CAPACITOR 16V 47U	1	
C255		ECUM1H103KBN	C.CAPACITOR CH 50V 0.01U	1	
C256,57		ECUM1E104ZFN	C.CAPACITOR CH 25V 0.1U	2	
C258		ECUM1H150JCN	C.CAPACITOR CH 50V 15P	1	
C259		ECUM1H220JCN	C.CAPACITOR CH 50V 22P	1	
C260		ECUM1H103KBN	C.CAPACITOR CH 50V 0.01U	1	
C261		ECUM1H270JCN	C.CAPACITOR CH 50V 27P	1	
C301,02		ECUM1H103KBN	C.CAPACITOR CH 50V 0.01U	2	
C303		ECUM1H220JCN	C.CAPACITOR CH 50V 22P	1	
C304,05		ECUM1H103KBN	C.CAPACITOR CH 50V 0.01U	2	
C306		ECUM1H220JCN	C.CAPACITOR CH 50V 22P	1	
C307		ECEA1AU101	E.CAPACITOR 10V 100U	1	
C308,09		ECUM1H103KBN	C.CAPACITOR CH 50V 0.01U	2	
C310		ECEA1AU101	E.CAPACITOR 10V 100U	1	
C311		ECUM1H103KBN	C.CAPACITOR CH 50V 0.01U	1	
C316		ECUM1E104ZFN	C.CAPACITOR CH 25V 0.1U	1	
C322		ECUM1E104ZFN	C.CAPACITOR CH 25V 0.1U	1	
C325		ECUM1E104ZFN	C.CAPACITOR CH 25V 0.1U	1	
C342		ECUM1H103KBN	C.CAPACITOR CH 50V 0.01U	1	
C343		ECUM1H150JCN	C.CAPACITOR CH 50V 15P	1	
C344		ECUM1H101JCN	C.CAPACITOR CH 50V 100P	1	
C345		ECUM1H100DCN	C.CAPACITOR CH 50V 10P	1	
C346		ECUM1H103KBN	C.CAPACITOR CH 50V 0.01U	1	
C347,48		ECEA1AU101	E.CAPACITOR 10V 100U	2	
C349		ECUM1H103KBN	C.CAPACITOR CH 50V 0.01U	1	
C350		ECUM1H820JCN	C.CAPACITOR CH 50V 82P	1	
C351,52		ECUM1H103KBN	C.CAPACITOR CH 50V 0.01U	2	
C353		ECUM1H680JCN	C.CAPACITOR CH 50V 68P	1	
C354,55		ECUM1H103KBN	C.CAPACITOR CH 50V 0.01U	2	
C356		ECUM1E104ZFN	C.CAPACITOR CH 25V 0.1U	1	
C357		ECEA1HU2R2	E.CAPACITOR 50V 2.2U	1	
C358		ECEA1AU101	E.CAPACITOR 10V 100U	1	
C377,78		ECUM1H103KBN	C.CAPACITOR CH 50V 0.01U	2	
C380		ECUM1E104ZFN	C.CAPACITOR CH 25V 0.1U	1	
C381		ECUM1H103KBN	C.CAPACITOR CH 50V 0.01U	1	
C382		ECUM1E104ZFN	C.CAPACITOR CH 25V 0.1U	1	
C383		ECEA1AU101	E.CAPACITOR 10V 100U	1	
C386		ECUM1H050DCN	C.CAPACITOR CH 50V 50P	1	
C387		ECUM1H100DCN	C.CAPACITOR CH 50V 10P	1	
C389		ECUM1H331JCN	C.CAPACITOR CH 50V 330P	1	
C391		ECUM1H470JCN	C.CAPACITOR CH 50V 47P	1	
C392		ECUM1H103KBN	C.CAPACITOR CH 50V 0.01U	1	
C393		ECEA1AU101	E.CAPACITOR 10V 100U	1	

Ref.No.		Part No.	Part Name & Description	Pcs	Remarks
C394		ECUM1H103KBN	C.CAPACITOR CH 50V 0.01U	1	
C395		ECUM1E104ZFN	C.CAPACITOR CH 25V 0.1U	1	
C396,97		ECUM1H103KBN	C.CAPACITOR CH 50V 0.01U	2	
C398		ECUM1H180JCN	C.CAPACITOR CH 50V 18P	1	
C399		ECUM1H103KBN	C.CAPACITOR CH 50V 0.01U	1	
C400		ECUM1E104ZFN	C.CAPACITOR CH 25V 0.1U	1	
C401-03		ECUM1H103KBN	C.CAPACITOR CH 50V 0.01U	3	
C404		ECEA1AU101	E.CAPACITOR 10V 100U	1	
C405-07		ECUM1E104ZFN	C.CAPACITOR CH 25V 0.1U	3	
C408,09		ECUM1H270JCN	C.CAPACITOR CH 50V 27P	2	
C410		ECEA1AU471	E.CAPACITOR 10V 470U	1	
C411		ECUM1E104ZFN	C.CAPACITOR CH 25V 0.1U	1	
C412		ECUM1H221JCN	C.CAPACITOR CH 50V 220P	1	
C413		ECEA1AU101	E.CAPACITOR 10V 100U	1	
C414		ECUM1H470JCN	C.CAPACITOR CH 50V 47P	1	
C415		ECUM1H180JCN	C.CAPACITOR CH 50V 18P	1	
C416		ECUM1H181JCN	C.CAPACITOR CH 50V 180P	1	
C417,18		ECUM1E104ZFN	C.CAPACITOR CH 25V 0.1U	2	
C419		ECUM1H331JCN	C.CAPACITOR CH 50V 330P	1	
C420		ECUM1H220JCN	C.CAPACITOR CH 50V 22P	1	
C421		ECUM1H680JCN	C.CAPACITOR CH 50V 68P	1	
C422		ECUM1H330JCN	C.CAPACITOR CH 50V 33P	1	
C423		ECEA1AU101	E.CAPACITOR 10V 100U	1	
C424		ECEA1CU100	E.CAPACITOR 16V 10U	1	
C425		ECUM1H221JCN	C.CAPACITOR CH 50V 220P	1	
C426		VCM0044	M.CAPACITOR 130P	1	
C427		VCM0023	M.CAPACITOR 379P	1	
C428		ECUM1H680JCN	C.CAPACITOR CH 50V 68P	1	
C429		ECUM1H390JCN	C.CAPACITOR CH 50V 39P	1	
C430		ECUM1H331JCN	C.CAPACITOR CH 50V 330P	1	
C431		ECUM1H270JCN	C.CAPACITOR CH 50V 27P	1	
C432		ECEA0JU221	E.CAPACITOR 6.3V 220U	1	
C433		ECUM1H470JCN	C.CAPACITOR CH 50V 47P	1	
C434		ECUM1H560JCN	C.CAPACITOR CH 50V 56P	1	
C435		ECUM1H020CCN	C.CAPACITOR CH 50V 2P	1	
C436,37		ECUM1E104ZFN	C.CAPACITOR CH 25V 0.1U	2	
C440		ECUM1H470JCN	C.CAPACITOR CH 50V 47P	1	
C441		ECUM1H103KBN	C.CAPACITOR CH 50V 0.01U	1	
C442,43		ECEA1CU221	E.CAPACITOR 16V 220U	2	
C444,45		ECUM1H103KBN	C.CAPACITOR CH 50V 0.01U	2	
C446,47		VCM0027	M.CAPACITOR 301P	2	
C448		ECEA1AU101	E.CAPACITOR 10V 100U	1	
C453		ECUM1E104ZFN	C.CAPACITOR CH 25V 0.1U	1	
C467		ECUM1E104ZFN	C.CAPACITOR CH 25V 0.1U	1	
C468		ECUM1H103KBN	C.CAPACITOR CH 50V 0.01U	1	
C470		ECUM1H330JCN	C.CAPACITOR CH 50V 33P	1	
C471		ECUM1H060DCN	C.CAPACITOR CH 50V 6P	1	
C472		VCC0037F062	C.CAPACITOR 50V 62P	1	
C473		ECUM1H182JN	C.CAPACITOR CH 50V 1800P	1	
C474		ECUM1E104ZFN	C.CAPACITOR CH 25V 0.1U	1	
C475		ECUM1H103KBN	C.CAPACITOR CH 50V 0.01U	1	
C476		ECEA1AU101	E.CAPACITOR 10V 100U	1	
C477		ECUM1H050DCN	C.CAPACITOR CH 50V 50P	1	
C478		ECEA1AU101	E.CAPACITOR 10V 100U	1	
C701,02		ECUM1H103KBN	C.CAPACITOR CH 50V 0.01U	2	
C703		ECEA1AU101	E.CAPACITOR 10V 100U	1	
C704,05		ECUM1H103KBN	C.CAPACITOR CH 50V 0.01U	2	
C706		ECUM1H330JCN	C.CAPACITOR CH 50V 33P	1	
C725		ECUM1H180JCN	C.CAPACITOR CH 50V 18P	1	
C726		ECUM1H103KBN	C.CAPACITOR CH 50V 0.01U	1	
C727		ECUM1E104ZFN	C.CAPACITOR CH 25V 0.1U	1	
C728		ECUM1H220JCN	C.CAPACITOR CH 50V 22P	1	
C729		ECUM1H121JCN	C.CAPACITOR CH 50V 120P	1	
C730,31		ECUM1H103KBN	C.CAPACITOR CH 50V 0.01U	2	
C732		ECUM1H101JCN	C.CAPACITOR CH 50V 100P	1	
C733		ECEA1AU101	E.CAPACITOR 10V 100U	1	
C734		ECUM1H331JCN	C.CAPACITOR CH 50V 330P	1	
C735		ECEA1AU101	E.CAPACITOR 10V 100U	1	
C736		ECUM1H103KBN	C.CAPACITOR CH 50V 0.01U	1	
C737		ECUM1H101JCN	C.CAPACITOR CH 50V 100P	1	
C738		ECUM1H103KBN	C.CAPACITOR CH 50V 0.01U	1	
C740-42		ECUM1H103KBN	C.CAPACITOR CH 50V 0.01U	3	
C744		ECUM1E104ZFN	C.CAPACITOR CH 25V 0.1U	1	
C745		ECUM1H103KBN	C.CAPACITOR CH 50V 0.01U	1	
C746		ECUM1E104ZFN	C.CAPACITOR CH 25V 0.1U	1	

Ref.No.		Part No.	Part Name & Description	Pcs	Remarks
C747		ECEA1AU101	E.CAPACITOR 10V 100U	1	
C750		ECUM1H331JCN	C.CAPACITOR CH 50V 330P	1	
C751		ECUM1H101JCN	C.CAPACITOR CH 50V 100P	1	
C752		ECUM1H152JN	C.CAPACITOR CH 50V 1500P	1	
C753		ECUM1H220JCN	C.CAPACITOR CH 50V 22P	1	
C754		ECUM1H101JCN	C.CAPACITOR CH 50V 100P	1	
C755		ECUM1H220JCN	C.CAPACITOR CH 50V 22P	1	
C756		ECUM1H680JCN	C.CAPACITOR CH 50V 68P	1	
C757		ECUM1H150JCN	C.CAPACITOR CH 50V 15P	1	
C758		ECUM1H050DCN	C.CAPACITOR CH 50V 50P	1	
C759		ECUM1E104ZFN	C.CAPACITOR CH 25V 0.1U	1	
C760		ECUM1H100DCN	C.CAPACITOR CH 50V 10P	1	
C762		ECUM1H221JCN	C.CAPACITOR CH 50V 220P	1	
C763		ECUM1H101JCN	C.CAPACITOR CH 50V 100P	1	
C764-66		ECUM1H103KBN	C.CAPACITOR CH 50V 0.01U	3	
C767		ECEA1AU101	E.CAPACITOR 10V 100U	1	
C768,69		ECUM1H103KBN	C.CAPACITOR CH 50V 0.01U	2	
C770		ECUM1H220JCN	C.CAPACITOR CH 50V 22P	1	
C771		ECUM1H471JCN	C.CAPACITOR CH 50V 470P	1	
C772		ECUM1E104ZFN	C.CAPACITOR CH 25V 0.1U	1	
C773-75		ECUM1H103KBN	C.CAPACITOR CH 50V 0.01U	3	
C776		ECUM1E104ZFN	C.CAPACITOR CH 25V 0.1U	1	
C777		ECEA1AU101	E.CAPACITOR 10V 100U	1	
C778,79		ECUM1E104ZFN	C.CAPACITOR CH 25V 0.1U	2	
C780,81		ECUM1H390JCN	C.CAPACITOR CH 50V 39P	2	
C782		ECEA1AU471	E.CAPACITOR 10V 470U	1	
C783		ECUM1E104ZFN	C.CAPACITOR CH 25V 0.1U	1	
C784		ECUM1H221JCN	C.CAPACITOR CH 50V 220P	1	
C785		ECEA1AU101	E.CAPACITOR 10V 100U	1	
C786		ECUM1H121JCN	C.CAPACITOR CH 50V 120P	1	
C787		ECUM1H100DCN	C.CAPACITOR CH 50V 10P	1	
C788		ECUM1H331JCN	C.CAPACITOR CH 50V 330P	1	
C789,90		ECUM1E104ZFN	C.CAPACITOR CH 25V 0.1U	2	
C791		ECUM1H331JCN	C.CAPACITOR CH 50V 330P	1	
C792		ECUM1H220JCN	C.CAPACITOR CH 50V 22P	1	
C793		ECUM1H680JCN	C.CAPACITOR CH 50V 68P	1	
C794		ECUM1H330JCN	C.CAPACITOR CH 50V 33P	1	
C796		ECEA1CU100	E.CAPACITOR 16V 10U	1	
C797		VCM0023	M.CAPACITOR 379P	1	
C799		ECEA0JU221	E.CAPACITOR 6.3V 220U	1	
C800		ECUM1H470JCN	C.CAPACITOR CH 50V 47P	1	
C801		ECUM1H020CCN	C.CAPACITOR CH 50V 2P	1	
C802		ECUM1H121JCN	C.CAPACITOR CH 50V 120P	1	
C803,04		ECUM1E104ZFN	C.CAPACITOR CH 25V 0.1U	2	
C805		ECUM1H470JCN	C.CAPACITOR CH 50V 47P	1	
C808		ECEA1CU221	E.CAPACITOR 16V 220U	1	
C810		ECEA1CU221	E.CAPACITOR 16V 220U	1	
C811,12		ECUM1H103KBN	C.CAPACITOR CH 50V 0.01U	2	
C813,14		VCM0027	M.CAPACITOR 301P	2	
C815		ECEA1AU101	E.CAPACITOR 10V 100U	1	
C821		ECUM1E104ZFN	C.CAPACITOR CH 25V 0.1U	1	
C836		ECUM1H470JCN	C.CAPACITOR CH 50V 47P	1	
C837		ECUM1H060DCN	C.CAPACITOR CH 50V 6P	1	
C838,39		ECUM1H100DCN	C.CAPACITOR CH 50V 10P	2	
C840		VCC0037F062	C.CAPACITOR 50V 62P	1	
C841		ECUM1H080DCN	C.CAPACITOR CH 50V 80P	1	
C842		ECUM1H820JCN	C.CAPACITOR CH 50V 82P	1	
C843		ECEA1AU101	E.CAPACITOR 10V 100U	1	
C844		ECUM1H103KBN	C.CAPACITOR CH 50V 0.01U	1	
C845		ECUM1H050DCN	C.CAPACITOR CH 50V 50P	1	
C846		ECEA1AU101	E.CAPACITOR 10V 100U	1	
D1		MA151WK	DIODE	1	
D2		MA151WA	DIODE	1	
D3		MA151WK	DIODE	1	
D201		MA151WK	DIODE	1	
D301		MA151WK	DIODE	1	
D303		MA151K	DIODE	1	
D305-07		MA151WK	DIODE	3	
D308,09		MA151WA	DIODE	2	
D701		MA151WK	DIODE	1	
D702,03		MA151K	DIODE	2	
D705,06		MA151WK	DIODE	2	

Ref.No.	Part No.	Part Name & Description	Pcs	Remarks
DL301	VLD0190	DELAY	1	
DL701	VLD0199	DELAY	1	
FL1	ELB5F100	FILTER	1	
FL201	ELB5F100	FILTER	1	
FL302	VLF0658	FILTER	1	
FL303	VLF0712	FILTER	1	
FL701	VLF0652	FILTER	1	
IC1	NE5539D	IC	1	
IC2	UPD4053BG	IC	1	
IC3	RC084M	IC	1	
IC4	RC082BM	IC	1	
IC5	AN6306S	IC	1	
IC6	MC14538BF	IC	1	
IC7	TC74HC221AF	IC	1	
IC9	AN79N09	IC	1	
IC10	AN79N09	IC	1	
IC11,12	AN79M05F	IC	2	
IC13	AN78M05F	IC	1	
IC14	AN78N05	IC	1	
IC15	AN78N09	IC	1	
IC16	AN78L05	IC	1	
IC17	AN78N09	IC	1	
IC201	NE5539D	IC	1	
IC202	TC74HC221AF	IC	1	
IC203	AN6306S	IC	1	
IC301	AN6308S	IC	1	
IC306	NJM1496M	IC	1	
IC307	UPD4053BG	IC	1	
IC310	AN6308S	IC	1	
IC311-15	10116D	IC	5	
IC316	SN74LS123NS	IC	1	
IC317	MC74HC00AF	IC	1	
IC319	NE5539D	IC	1	
IC326	RC082BM	IC	1	
IC327	AN6308S	IC	1	
IC701	AN6308S	IC	1	
IC705	NJM1496M	IC	1	
IC706	UPD4053BG	IC	1	
IC707	AN6308S	IC	1	
IC708-12	10116D	IC	5	
IC716	NE5539D	IC	1	
IC723	AN6308S	IC	1	
JC1-C4	VJF0304		4	
L1,L2	VLQEL05S101K	COIL 100UH	2	
L3	VLQEL05S18OJ	COIL 18UH	1	
L4	VLQEL05S151J	COIL 150UH	1	
L5	VLQEL05S101K	COIL 100UH	1	
L6	VLQEL05S1R0J	COIL 1UH	1	
L7	VLQEL05S101K	COIL 100UH	1	
L201,02	VLQEL05S101K	COIL 100UH	2	
L203	VLQEL05S18OJ	COIL 18UH	1	
L204	VLQEL05S561J	COIL 560UH	1	
L205	VLQEL05S101K	COIL 100UH	1	
L206	VLQEL05S4R7J	COIL 4.7UH	1	
L207	VLQEL05S6R8J	COIL 6.8UH	1	
L208	VLQEL05S2R7J	COIL 2.7UH	1	
L209	VLQEL05S390J	COIL 39UH	1	
L210	VLQEL05S101K	COIL 100UH	1	
L212	VLQEL05S101K	COIL 100UH	1	
L301	VLQEL05S101K	COIL 100UH	1	

Ref.No.	Part No.	Part Name & Description	Pcs	Remarks
L302,03	VLQEL05S100J	COIL 10UH	2	
L304	VLQEL05S101K	COIL 100UH	1	
L308	VLQEL05S3R3J	COIL 3.3UH	1	
L309,10	VLQEL05S101K	COIL 100UH	2	
L311	VLQEL05S330J	COIL 33UH	1	
L312	VLQEL05S2R7J	COIL 2.7UH	1	
L313	VLQEL05S101K	COIL 100UH	1	
L318	VLQEL05S101K	COIL 100UH	1	
L320,21	VLQEL05S2R2J	COIL 2.2UH	2	
L322	VLQEL05S18OJ	COIL 18UH	1	
L323	VLQEL05S101K	COIL 100UH	1	
L324	VLQEL05S1R0J	COIL 1UH	1	
L325-27	VLQEL05S101K	COIL 100UH	3	
L328	VLQEL05S6R8J	COIL 6.8UH	1	
L329	VLQEL05S101K	COIL 100UH	1	
L330	VLQEL05S3R3J	COIL 3.3UH	1	
L333	VLQEL05S101K	COIL 100UH	1	
L334	VLQEL05S6R8J	COIL 6.8UH	1	
L345	VLQEL05S1R0J	COIL 1UH	1	
L346	VLQEL05SR47K	COIL	1	
L347	VLQEL05S101K	COIL 100UH	1	
L701	VLQEL05S101K	COIL 100UH	1	
L702	VLQEL05S15OJ	COIL 15UH	1	
L709	VLQEL05S4R7J	COIL 4.7UH	1	
L710	VLQEL05S101K	COIL 100UH	1	
L711	VLQEL05S56OJ	COIL 56UH	1	
L712	VLQEL05S101K	COIL 100UH	1	
L713	VLQEL05S3R9J	COIL 3.9UH	1	
L715	VLQEL05S101K	COIL 100UH	1	
L716	VLQEL05S471J	COIL 470UH	1	
L717	VLQEL05S330J	COIL 33UH	1	
L718	VLQEL05S3R3J	COIL 3.3UH	1	
L719	VLQEL05S8R2J	COIL 8.2UH	1	
L720	VLQEL05S6R8J	COIL 6.8UH	1	
L721	VLQEL05S4R7J	COIL 4.7UH	1	
L722	VLQEL05S2R7J	COIL 2.7UH	1	
L723	VLQEL05S5R6J	COIL 5.6UH	1	
L724	VLQEL05S101K	COIL 100UH	1	
L725	VLQEL05S1R5J	COIL 1.5UH	1	
L726-28	VLQEL05S101K	COIL 100UH	3	
L729	VLQEL05S15OJ	COIL 15UH	1	
L731	VLQEL05S101K	COIL 100UH	1	
L732	VLQEL05S6R8J	COIL 6.8UH	1	
L737	VLQEL05S22OJ	COIL 22UH	1	
L743	VLQEL05S181J	COIL 180UH	1	
L744	VLQEL05S1R2J	COIL	1	
L745	VLQEL05S5R6J	COIL 5.6UH	1	
L746	VLQEL05S101K	COIL 100UH	1	
Q1	2SD601-R	TRANSISTOR CHIP	1	(Q,R)
Q2	2SC3757	TRANSISTOR	1	(Q,R)
Q3,Q4	2SA1226	TRANSISTOR	2	
Q7	2SC2480	TRANSISTOR	1	
Q8	2SA1462	TRANSISTOR	1	
Q9	2SC2295-B	TRANSISTOR CHIP	1	(B,C)
Q10	2SA1022-B	TRANSISTOR CHIP	1	(B,C)
Q11-13	2SA1226	TRANSISTOR	3	
Q14	2SC2295-B	TRANSISTOR CHIP	1	(B,C)
Q15	2SK374-R	TRANSISTOR	1	(Q,R)
Q16	2SA1226	TRANSISTOR	1	
Q17	2SC3757	TRANSISTOR	1	(Q,R)
Q18	2SA1226	TRANSISTOR	1	
Q19	2SC2295-B	TRANSISTOR CHIP	1	(B,C)
Q21	UN2213	TRANSISTOR-RESISTOR	1	
Q201	2SD601-R	TRANSISTOR CHIP	1	(Q,R)
Q202-04	2SC2480	TRANSISTOR	3	
Q206	2SC2295-B	TRANSISTOR CHIP	1	(B,C)
Q207	2SC2480	TRANSISTOR	1	
Q208	2SA1462	TRANSISTOR	1	
Q209	2SC2295-B	TRANSISTOR CHIP	1	(B,C)
Q210	2SA1022-B	TRANSISTOR CHIP	1	(B,C)
Q211	2SC2295-B	TRANSISTOR CHIP	1	(B,C)
Q212	2SA1022-B	TRANSISTOR CHIP	1	(B,C)

Ref.No.	Part No.	Part Name & Description	Pcs	Remarks
Q213	2SA1226	TRANSISTOR	1	
Q214	2SC2295-B	TRANSISTOR CHIP	1	(B,C)
Q215	2SC3757	TRANSISTOR	1	(Q,R)
Q216	2SC2295-B	TRANSISTOR CHIP	1	(B,C)
Q217	2SC3757	TRANSISTOR	1	(Q,R)
Q218	2SA1226	TRANSISTOR	1	
Q219	2SC2295-B	TRANSISTOR CHIP	1	(B,C)
Q301-04	2SC2295-B	TRANSISTOR CHIP	4	(B,C)
Q313,14	2SC2295-B	TRANSISTOR CHIP	2	(B,C)
Q315	2SA1022-B	TRANSISTOR CHIP	1	(B,C)
Q316	2SC2295-B	TRANSISTOR CHIP	1	(B,C)
Q317,18	2SA1022-B	TRANSISTOR CHIP	2	(B,C)
Q319	IMX4	TRANSISTOR	1	
Q320	UN2113	TRANSISTOR-RESISTOR	1	
Q324	2SC2295-B	TRANSISTOR CHIP	1	(B,C)
Q326	2SC2295-B	TRANSISTOR CHIP	1	(B,C)
Q327	2SA1022-B	TRANSISTOR CHIP	1	(B,C)
Q329-38	2SC2295-B	TRANSISTOR CHIP	10	(B,C)
Q339,40	UN2213	TRANSISTOR-RESISTOR	2	
Q341	2SA1462	TRANSISTOR	1	
Q342,43	2SC3757	TRANSISTOR	2	(Q,R)
Q344	2SC2295-B	TRANSISTOR CHIP	1	(B,C)
Q345	2SA1022-B	TRANSISTOR CHIP	1	(B,C)
Q346	2SC2480	TRANSISTOR	1	
Q347	2SA1462	TRANSISTOR	1	
Q348	2SC2480	TRANSISTOR	1	
Q349	2SA1226	TRANSISTOR	1	
Q356-61	UN2113	TRANSISTOR-RESISTOR	6	
Q376	2SA1462	TRANSISTOR	1	
Q377	2SA1226	TRANSISTOR	1	
Q378	2SC3757	TRANSISTOR	1	(Q,R)
Q379	2SC2480	TRANSISTOR	1	
Q382-84	2SC3757	TRANSISTOR	3	(Q,R)
Q385,86	2SC2295-B	TRANSISTOR CHIP	2	(B,C)
Q387	2SA1022-B	TRANSISTOR CHIP	1	(B,C)
Q388	2SD601-R	TRANSISTOR CHIP	1	(Q,R)
Q389	2SB709-R	TRANSISTOR CHIP	1	(Q,R)
Q390	2SA1226	TRANSISTOR	1	
Q391,92	2SD601-R	TRANSISTOR CHIP	2	(Q,R)
Q393	2SB709-R	TRANSISTOR CHIP	1	(Q,R)
Q701,02	2SA1022-B	TRANSISTOR CHIP	2	(B,C)
Q710,11	2SC2295-B	TRANSISTOR CHIP	2	(B,C)
Q712	2SA1022-B	TRANSISTOR CHIP	1	(B,C)
Q713	2SC2295-B	TRANSISTOR CHIP	1	(B,C)
Q714,15	2SA1022-B	TRANSISTOR CHIP	2	(B,C)
Q716	2SC2295-B	TRANSISTOR CHIP	1	(B,C)
Q718	2SC2295-B	TRANSISTOR CHIP	1	(B,C)
Q719	2SA1022-B	TRANSISTOR CHIP	1	(B,C)
Q721-30	2SC2295-B	TRANSISTOR CHIP	10	(B,C)
Q731	UN2213	TRANSISTOR-RESISTOR	1	
Q732	2SA1462	TRANSISTOR	1	
Q733	2SC2295-B	TRANSISTOR CHIP	1	(B,C)
Q734	2SA1022-B	TRANSISTOR CHIP	1	(B,C)
Q735	2SC2480	TRANSISTOR	1	
Q736	2SA1462	TRANSISTOR	1	
Q737	2SC2480	TRANSISTOR	1	
Q738	2SA1226	TRANSISTOR	1	
Q754	2SA1462	TRANSISTOR	1	
Q755	2SA1226	TRANSISTOR	1	
Q756	2SC3757	TRANSISTOR	1	(Q,R)
Q757	2SC2480	TRANSISTOR	1	
Q758-60	2SC3757	TRANSISTOR	3	(Q,R)
Q761	2SC2295-B	TRANSISTOR CHIP	1	(B,C)
Q762	2SA1022-B	TRANSISTOR CHIP	1	(B,C)
Q763	2SD601-R	TRANSISTOR CHIP	1	(Q,R)
Q764	2SB709-R	TRANSISTOR CHIP	1	(Q,R)
Q765	2SA1226	TRANSISTOR	1	
Q766	2SD601-R	TRANSISTOR CHIP	1	(Q,R)
		RESISTORS		
R1	ERJ6GEYG471	M.RESISTOR CH 1/10W 470	1	
R2	ERJ6GEYJ470	M.RESISTOR CH 1/10W 47	1	
R3	ERJ6GEYJ152	M.RESISTOR CH 1/10W 1.5K	1	

Ref.No.	Part No.	Part Name & Description	Pcs	Remarks
R4,R5	VRE0034E51A	M.RESISTOR CH 1/10W 357	2	
R6	ERJ6GEYJ101	M.RESISTOR CH 1/10W 100	1	
R7	ERJ6GEYG151	M.RESISTOR CH 1/10W 150	1	
R8	ERJ6GEYJ332	M.RESISTOR CH 1/10W 3.3K	1	
R9	ERJ6GEYJ561	M.RESISTOR CH 1/10W 560	1	
R10	ERJ6GEYJ332	M.RESISTOR CH 1/10W 3.3K	1	
R11	ERJ6GEYJ101	M.RESISTOR CH 1/10W 100	1	
R12	ERJ6GEYJ332	M.RESISTOR CH 1/10W 3.3K	1	
R13	ERJ6GEYJ103	M.RESISTOR CH 1/10W 10K	1	
R14,15	ERJ6GEYJ101	M.RESISTOR CH 1/10W 100	2	
R16	ERJ6GEYJ222	M.RESISTOR CH 1/10W 2.2K	1	
R17	ERJ6GEYJ682	M.RESISTOR CH 1/10W 6.8K	1	
R18	ERJ6GEYJ152	M.RESISTOR CH 1/10W 1.5K	1	
R19	ERJ6GEYJ103	M.RESISTOR CH 1/10W 10K	1	
R20	ERJ6GEYJ472	M.RESISTOR CH 1/10W 4.7K	1	
R27	ERJ6GEYG223	M.RESISTOR CH 1/10W 22K	1	
R28,29	ERJ6GEYJ221	M.RESISTOR CH 1/10W 220	2	
R30,31	ERJ6GEYJ183	M.RESISTOR CH 1/10W 18K	2	
R32,33	ERJ6GEYJ273	M.RESISTOR CH 1/10W 27K	2	
R34,35	ERJ6GEYJ681	M.RESISTOR CH 1/10W 680	2	
R36	ERJ6GEYG471	M.RESISTOR CH 1/10W 470	1	
R37	ERJ6GEYJ273	M.RESISTOR CH 1/10W 27K	1	
R38	VRE0034E43A	M.RESISTOR 1/10W	1	
R39	VRE0034E82A	M.RESISTOR 1/10W	1	
R40,41	VRE0034E89A	M.RESISTOR CH 1/10W 825	2	
R42	ERJ6GEYJ470	M.RESISTOR CH 1/10W 47	1	
R43	ERJ6GEYJ682	M.RESISTOR CH 1/10W 6.8K	1	
R44	ERJ6GEYJ152	M.RESISTOR CH 1/10W 1.5K	1	
R45	VRE0034E26A	M.RESISTOR CH 1/10W 182	1	
R46	ERJ6GEYJ222	M.RESISTOR CH 1/10W 2.2K	1	
R47	ERJ6GEYJ102	M.RESISTOR CH 1/10W 1K	1	
R48	ERJ6GEYJ331	M.RESISTOR CH 1/10W 330	1	
R49	ERJ6GEYJ181	M.RESISTOR CH 1/10W 180	1	
R50	ERJ6GEYJ101	M.RESISTOR CH 1/10W 100	1	
R51	ERJ6GEYJ332	M.RESISTOR CH 1/10W 3.3K	1	
R52	ERJ6GEYJ102	M.RESISTOR CH 1/10W 1K	1	
R53	ERJ6GEYJ221	M.RESISTOR CH 1/10W 220	1	
R54	ERJ6GEYK225	M.RESISTOR CH 1/10W 2.2M	1	
R55,56	ERJ6GEYJ101	M.RESISTOR CH 1/10W 100	2	
R57	ERJ6GEYG103	M.RESISTOR CH 1/10W 10K	1	
R58	ERJ6GEYJ105	M.RESISTOR CH 1/10W 1M	1	
R59	ERJ6GEYK225	M.RESISTOR CH 1/10W 2.2M	1	
R60	ERJ6GEYJ472	M.RESISTOR CH 1/10W 4.7K	1	
R61	ERJ6GEYJ682	M.RESISTOR CH 1/10W 6.8K	1	
R62	ERJ6GEYJ103	M.RESISTOR CH 1/10W 10K	1	
R63	ERJ6GEYJ101	M.RESISTOR CH 1/10W 100	1	
R64	ERJ6GEYG243	M.RESISTOR CH 1/10W 24K	1	
R65	ERJ6GEYJ103	M.RESISTOR CH 1/10W 10K	1	
R66	ERJ6GEYJ105	M.RESISTOR CH 1/10W 1M	1	
R67	VRE0034E27B	M.RESISTOR CH 1/10W 1.87K	1	
R68	ERJ6GEYK5R6	M.RESISTOR CH1/10W 5.6	1	
R69	VRE0034E751	M.RESISTOR CH 1/10W 750	1	
R70	ERJ6GEYJ222	M.RESISTOR CH 1/10W 2.2K	1	
R72	VRE0O6610822	M.RESISTOR	1	
R73,74	VRE0O6645820	M.RESISTOR	2	
R75	ERJ6GEYJ154	M.RESISTOR CH 1/10W 150K	1	
R76	ERJ6GEYJ184	M.RESISTOR CH 1/10W 180K	1	
R77	ERJ6GEYJ332	M.RESISTOR CH 1/10W 3.3K	1	
R78	ERJ6GEYJ470	M.RESISTOR CH 1/10W 47	1	
R79	VRE0034E51A	M.RESISTOR CH 1/10W 357	1	
R80	ERJ6GEYG151	M.RESISTOR CH 1/10W 150	1	
R81	ERJ6GEYJ102	M.RESISTOR CH 1/10W 1K	1	
R82,83	ERJ6GEYJ470	M.RESISTOR CH 1/10W 47	2	
R84,85	ERJ6GEYJ102	M.RESISTOR CH 1/10W 1K	2	
R86,87	ERJ6GEYJ101	M.RESISTOR CH 1/10W 100	2	
R88	ERJ6GEYJ222	M.RESISTOR CH 1/10W 2.2K	1	
R89	VRE0034E51A	M.RESISTOR CH 1/10W 357	1	
R90	ERJ6GEYJ102	M.RESISTOR CH 1/10W 1K	1	
R93	ERJ6GEYJ470	M.RESISTOR CH 1/10W 47	1	
R94	ERJ6GEYJ473	M.RESISTOR CH 1/10W 47K	1	
R95	ERJ6GEYJ153	M.RESISTOR CH 1/10W 15K	1	
R96	ERJ6GEYG223	M.RESISTOR CH 1/10W 22K	1	
R97	ERJ6GEYJ153	M.RESISTOR CH 1/10W 15K	1	
R98	ERJ6GEYJ103	M.RESISTOR CH 1/10W 10K	1	
R99	ERJ6GEYJ332	M.RESISTOR CH 1/10W 3.3K	1	

Ref.No.	Part No.	Part Name & Description	Pcs	Remarks
R102	ERJ6GEYG472	M.RESISTOR CH 1/10W 4.7K	1	
R103	ERJ6GEYG182	M.RESISTOR CH 1/10W 1.8K	1	
R104	ERJ6GEYG104	M.RESISTOR CH 1/10W 100K	1	
R105	ERJ6GEYJ222	M.RESISTOR CH 1/10W 2.2K	1	
R106	ERDS2TJ272	C.RESISTOR 1/4W 2.7K	1	
R201	ERJ6GEYG471	M.RESISTOR CH 1/10W 470	1	
R202	ERJ6GEYJ101	M.RESISTOR CH 1/10W 100	1	
R203	ERJ6GEYJ152	M.RESISTOR CH 1/10W 1.5K	1	
R204	VRE0034E51A	M.RESISTOR CH 1/10W 357	1	
R205	ERJ6GEYG151	M.RESISTOR CH 1/10W 150	1	
R206	ERJ6GEYJ101	M.RESISTOR CH 1/10W 100	1	
R207	ERJ6GEYG151	M.RESISTOR CH 1/10W 150	1	
R208	VRE0034E51A	M.RESISTOR CH 1/10W 357	1	
R209,10	ERJ6GEYJ332	M.RESISTOR CH 1/10W 3.3K	2	
R211,12	ERJ6GEYJ101	M.RESISTOR CH 1/10W 100	2	
R213,14	ERJ6GEYJ152	M.RESISTOR CH 1/10W 1.5K	2	
R215	VRE0034E43A	M.RESISTOR 1/10W	1	
R216	ERJ6GEYJ273	M.RESISTOR CH 1/10W 27K	1	
R217	VRE0034E82A	M.RESISTOR 1/10W	1	
R218	ERJ6GEYG471	M.RESISTOR CH 1/10W 470	1	
R219	VRE0034E89A	M.RESISTOR CH 1/10W 825	1	
R220	ERJ6GEYJ470	M.RESISTOR CH 1/10W 47	1	
R221	ERJ6GEYJ102	M.RESISTOR CH 1/10W 1K	1	
R222	ERJ6GEYJ222	M.RESISTOR CH 1/10W 2.2K	1	
R223	ERJ6GEYJ102	M.RESISTOR CH 1/10W 1K	1	
R224	VRE0034E26A	M.RESISTOR CH 1/10W 182	1	
R225	VRE0034E51A	M.RESISTOR CH 1/10W 357	1	
R231	ERJ6GEYJ332	M.RESISTOR CH 1/10W 3.3K	1	
R232	ERJ6GEYJ101	M.RESISTOR CH 1/10W 100	1	
R233	ERJ6GEYJ332	M.RESISTOR CH 1/10W 3.3K	1	
R234	ERJ6GEYG223	M.RESISTOR CH 1/10W 22K	1	
R235,36	ERJ6GEYJ221	M.RESISTOR CH 1/10W 220	2	
R237,38	ERJ6GEYJ183	M.RESISTOR CH 1/10W 18K	2	
R239,40	ERJ6GEYJ273	M.RESISTOR CH 1/10W 27K	2	
R241	ERJ6GEYJ681	M.RESISTOR CH 1/10W 680	1	
R242	VRE0034E26A	M.RESISTOR CH 1/10W 182	1	
R243	ERJ6GEYJ332	M.RESISTOR CH 1/10W 3.3K	1	
R244	ERJ6GEYK475	M.RESISTOR CH 1/10W 4.7M	1	
R245	VRE0034E26A	M.RESISTOR CH 1/10W 182	1	
R246	ERJ6GEYJ472	M.RESISTOR CH 1/10W 4.7K	1	
R247	ERJ6GEYG563	M.RESISTOR CH 1/10W 56K	1	
R248	ERJ6GEYJ153	M.RESISTOR CH 1/10W 15K	1	
R249	VRE0034E751	M.RESISTOR CH 1/10W 750	1	
R250	VRE0034E27B	M.RESISTOR CH 1/10W 1.87K	1	
R251	ERJ6GEYK5R6	M.RESISTOR CH1/10W 5.6	1	
R252	ERJ6GEYJ222	M.RESISTOR CH 1/10W 2.2K	1	
R253	ERJ6GEYJ272	M.RESISTOR CH 1/10W 2.7K	1	
R254	VRE0066071O3	M.RESISTOR	1	
R255,56	VRE0066396BO	M.RESISTOR	2	
R257	ERJ6GEYJ154	M.RESISTOR CH 1/10W 150K	1	
R258	ERJ6GEYJ184	M.RESISTOR CH 1/10W 180K	1	
R259	ERJ6GEYJ332	M.RESISTOR CH 1/10W 3.3K	1	
R260	ERJ6GEYJ680	M.RESISTOR CH 1/10W 68	1	
R261	ERJ6GEYJ470	M.RESISTOR CH 1/10W 47	1	
R262	ERJ6GEYG471	M.RESISTOR CH 1/10W 470	1	
R263	ERJ6GEYG391	M.RESISTOR CH 1/10W 390	1	
R264	ERJ6GEYG240	M.RESISTOR CH 1/10W 24	1	
R265	ERJ6GEYG471	M.RESISTOR CH 1/10W 470	1	
R266	ERJ6GEYJ470	M.RESISTOR CH 1/10W 47	1	
R267,68	ERJ6GEYJ472	M.RESISTOR CH 1/10W 4.7K	2	
R269,70	ERJ6GEYJ102	M.RESISTOR CH 1/10W 1K	2	
R271	ERJ6GEYJ222	M.RESISTOR CH 1/10W 2.2K	1	
R272	VRE0034E51A	M.RESISTOR CH 1/10W 357	1	
R273	ERJ6GEYJ472	M.RESISTOR CH 1/10W 4.7K	1	
R274	ERJ6GEYJ470	M.RESISTOR CH 1/10W 47	1	
R275	ERJ6GEYJ682	M.RESISTOR CH 1/10W 6.8K	1	
R276	ERJ6GEYJ332	M.RESISTOR CH 1/10W 3.3K	1	
R277	ERJ6GEYJ222	M.RESISTOR CH 1/10W 2.2K	1	
R279,80	ERJ6GEYJ470	M.RESISTOR CH 1/10W 47	2	
R281	ERJ6GEYJ222	M.RESISTOR CH 1/10W 2.2K	1	
R282,83	ERJ6GEYJ101	M.RESISTOR CH 1/10W 100	2	
R284	ERJ6GEYJ472	M.RESISTOR CH 1/10W 4.7K	1	
R285	ERJ6GEYJ222	M.RESISTOR CH 1/10W 2.2K	1	
R286	VRE0034E51A	M.RESISTOR CH 1/10W 357	1	
R287	ERJ6GEYJ102	M.RESISTOR CH 1/10W 1K	1	

Ref.No.	Part No.	Part Name & Description	Pcs	Remarks
R288	ERJ6GEYJ470	M.RESISTOR CH 1/10W 47	1	
R290	ERJ6GEYJ681	M.RESISTOR CH 1/10W 680	1	
R291	ERJ6GEYJ152	M.RESISTOR CH 1/10W 1.5K	1	
R292	ERJ6GEY0R00	M.RESISTOR CH 1/10W 0	1	
R293	ERJ6GEYJ222	M.RESISTOR CH 1/10W 2.2K	1	
R294	VRE0034E26A	M.RESISTOR CH 1/10W 182	1	
R301	ERJ6GEYJ470	M.RESISTOR CH 1/10W 47	1	
R302	ERJ6GEYJ681	M.RESISTOR CH 1/10W 680	1	
R303	ERJ6GEYJ102	M.RESISTOR CH 1/10W 1K	1	
R304	ERJ6GEYJ332	M.RESISTOR CH 1/10W 3.3K	1	
R305	ERJ6GEYJ470	M.RESISTOR CH 1/10W 47	1	
R306	ERJ6GEYJ681	M.RESISTOR CH 1/10W 680	1	
R307	ERJ6GEYJ102	M.RESISTOR CH 1/10W 1K	1	
R308	ERJ6GEYJ332	M.RESISTOR CH 1/10W 3.3K	1	
R309	ERJ6GEYJ222	M.RESISTOR CH 1/10W 2.2K	1	
R310	ERJ6GEYJ470	M.RESISTOR CH 1/10W 47	1	
R332	ERJ6GEYJ152	M.RESISTOR CH 1/10W 1.5K	1	
R333,34	ERJ6GEYG471	M.RESISTOR CH 1/10W 470	2	
R335,36	ERJ6GEYJ470	M.RESISTOR CH 1/10W 47	2	
R337,38	ERJ6GEYJ222	M.RESISTOR CH 1/10W 2.2K	2	
R339,40	VRE0034E43A	M.RESISTOR 1/10W	2	
R341	ERJ6GEYJ470	M.RESISTOR CH 1/10W 47	1	
R342	VRE0034E43A	M.RESISTOR 1/10W	1	
R343	VRE0034E89A	M.RESISTOR CH 1/10W 825	1	
R344	ERJ6GEYJ470	M.RESISTOR CH 1/10W 47	1	
R345	ERJ6GEYJ222	M.RESISTOR CH 1/10W 2.2K	1	
R346	ERJ6GEYJ102	M.RESISTOR CH 1/10W 1K	1	
R347	VRE0034E51A	M.RESISTOR CH 1/10W 357	1	
R348	ERJ6GEYJ153	M.RESISTOR CH 1/10W 15K	1	
R349	ERJ6GEYG223	M.RESISTOR CH 1/10W 22K	1	
R350,51	ERJ6GEYJ220	M.RESISTOR CH 1/10W 22	2	
R352	ERJ6GEYJ470	M.RESISTOR CH 1/10W 47	1	
R353	ERJ6GEYJ152	M.RESISTOR CH 1/10W 1.5K	1	
R354	ERJ6GEYG471	M.RESISTOR CH 1/10W 470	1	
R355	ERJ6GEYJ102	M.RESISTOR CH 1/10W 1K	1	
R356	ERJ6GEYJ221	M.RESISTOR CH 1/10W 220	1	
R357	ERJ6GEYJ222	M.RESISTOR CH 1/10W 2.2K	1	
R358	ERJ6GEYJ101	M.RESISTOR CH 1/10W 100	1	
R359	ERJ6GEYJ472	M.RESISTOR CH 1/10W 4.7K	1	
R360,61	ERJ6GEYJ473	M.RESISTOR CH 1/10W 47K	2	
R362	ERJ6GEYJ472	M.RESISTOR CH 1/10W 4.7K	1	
R363,64	ERJ6GEYG223	M.RESISTOR CH 1/10W 22K	2	
R365	ERJ6GEYJ473	M.RESISTOR CH 1/10W 47K	1	
R366	ERJ6GEYG223	M.RESISTOR CH 1/10W 22K	1	
R367	ERJ6GEYJ683	M.RESISTOR CH 1/10W 68K	1	
R368	ERJ6GEYJ472	M.RESISTOR CH 1/10W 4.7K	1	
R369	ERJ6GEYJ103	M.RESISTOR CH 1/10W 10K	1	
R370	ERJ6GEYJ683	M.RESISTOR CH 1/10W 68K	1	
R371	ERJ6GEYJ682	M.RESISTOR CH 1/10W 6.8K	1	
R394	ERJ6GEYG471	M.RESISTOR CH 1/10W 470	1	
R395	ERJ6GEYJ101	M.RESISTOR CH 1/10W 100	1	
R396	ERJ6GEYJ222	M.RESISTOR CH 1/10W 2.2K	1	
R397	ERJ6GEYJ470	M.RESISTOR CH 1/10W 47	1	
R398	ERJ6GEYJ152	M.RESISTOR CH 1/10W 1.5K	1	
R399,00	ERJ6GEYG301	M.RESISTOR CH 1/10W 300	2	
R401	ERJ6GEYJ470	M.RESISTOR CH 1/10W 47	1	
R402	ERJ6GEYJ102	M.RESISTOR CH 1/10W 1K	1	
R403	ERJ6GEYJ681	M.RESISTOR CH 1/10W 680	1	
R404	ERJ6GEYJ102	M.RESISTOR CH 1/10W 1K	1	
R405	ERJ6GEYJ152	M.RESISTOR CH 1/10W 1.5K	1	
R406	ERJ6GEYJ470	M.RESISTOR CH 1/10W 47	1	
R407	ERJ6GEYJ221	M.RESISTOR CH 1/10W 220	1	
R408	ERJ6GEYJ222	M.RESISTOR CH 1/10W 2.2K	1	
R409	ERJ6GEYJ470	M.RESISTOR CH 1/10W 47	1	
R410	ERJ6GEYJ152	M.RESISTOR CH 1/10W 1.5K	1	
R411	ERJ6GEYJ331	M.RESISTOR CH 1/10W 330	1	
R412	VRE0034E51A	M.RESISTOR CH 1/10W 357	1	
R413	ERJ6GEYJ470	M.RESISTOR CH 1/10W 47	1	
R414	ERJ6GEYJ222	M.RESISTOR CH 1/10W 2.2K	1	
R415	ERJ6GEYJ470	M.RESISTOR CH 1/10W 47	1	
R426	ERJ6GEYJ470	M.RESISTOR CH 1/10W 47	1	
R427-34	ERJ6GEYJ102	M.RESISTOR CH 1/10W 1K	8	
R435,36	ERJ6GEYJ332	M.RESISTOR CH 1/10W 3.3K	2	
R437	ERJ6GEYJ101	M.RESISTOR CH 1/10W 100	1	
R438,39	ERJ6GEYG471	M.RESISTOR CH 1/10W 470	2	

Ref.No.	Part No.	Part Name & Description	Pcs	Remarks
R440	ERJ6GEYJ470	M.RESISTOR CH 1/10W 47	1	
R441,42	ERJ6GEYJ681	M.RESISTOR CH 1/10W 680	2	
R443,44	ERJ6GEYJ101	M.RESISTOR CH 1/10W 100	2	
R445	ERJ6GEYJ470	M.RESISTOR CH 1/10W 47	1	
R446	ERJ6GEYG151	M.RESISTOR CH 1/10W 150	1	
R447,48	ERJ6GEYJ222	M.RESISTOR CH 1/10W 2.2K	2	
R449	ERJ6GEYJ470	M.RESISTOR CH 1/10W 47	1	
R450,51	ERJ6GEYJ222	M.RESISTOR CH 1/10W 2.2K	2	
R452,53	ERJ6GEYJ470	M.RESISTOR CH 1/10W 47	2	
R454-65	ERJ6GEYJ102	M.RESISTOR CH 1/10W 1K	12	
R466	ERJ6GEYJ683	M.RESISTOR CH 1/10W 68K	1	
R467,68	ERJ6GEYJ103	M.RESISTOR CH 1/10W 10K	2	
R469,70	ERJ6GEYJ680	M.RESISTOR CH 1/10W 68	2	
R471,72	ERJ6GEYJ332	M.RESISTOR CH 1/10W 3.3K	2	
R473	ERJ6GEYJ101	M.RESISTOR CH 1/10W 100	1	
R474	ERDS2TJ222	C.RESISTOR 1/4W 2.2K	1	
R475	ERJ6GEYJ102	M.RESISTOR CH 1/10W 1K	1	
R477	ERJ6GEYG471	M.RESISTOR CH 1/10W 470	1	
R478	ERJ6GEYJ102	M.RESISTOR CH 1/10W 1K	1	
R479	ERJ6GEYJ222	M.RESISTOR CH 1/10W 2.2K	1	
R480,81	ERJ6GEYG471	M.RESISTOR CH 1/10W 470	2	
R482	ERJ6GEYJ470	M.RESISTOR CH 1/10W 47	1	
R483,84	ERJ6GEYJ333	M.RESISTOR CH 1/10W 33K	2	
R485,86	ERJ6GEYJ102	M.RESISTOR CH 1/10W 1K	2	
R487	ERJ6GEYJ222	M.RESISTOR CH 1/10W 2.2K	1	
R488	ERJ6GEYJ221	M.RESISTOR CH 1/10W 220	1	
R489	ERJ6GEYJ392	M.RESISTOR CH 1/10W 3.9K	1	
R490	ERJ6GEYJ470	M.RESISTOR CH 1/10W 47	1	
R491	ERJ6GEYG223	M.RESISTOR CH 1/10W 22K	1	
R492	ERJ6GEYG471	M.RESISTOR CH 1/10W 470	1	
R493	ERJ6GEYJ152	M.RESISTOR CH 1/10W 1.5K	1	
R494,95	ERJ6GEYJ101	M.RESISTOR CH 1/10W 100	2	
R496	ERJ6GEYJ222	M.RESISTOR CH 1/10W 2.2K	1	
R497	ERJ6GEYJ102	M.RESISTOR CH 1/10W 1K	1	
R498	ERJ6GEYJ101	M.RESISTOR CH 1/10W 100	1	
R499	ERJ6GEYJ332	M.RESISTOR CH 1/10W 3.3K	1	
R500	ERJ6GEYG223	M.RESISTOR CH 1/10W 22K	1	
R501	ERJ6GEYJ332	M.RESISTOR CH 1/10W 3.3K	1	
R502	ERJ6GEYJ472	M.RESISTOR CH 1/10W 4.7K	1	
R503	ERJ6GEYJ103	M.RESISTOR CH 1/10W 10K	1	
R504	ERJ6GEYJ184	M.RESISTOR CH 1/10W 180K	1	
R505,06	ERJ6GEYJ473	M.RESISTOR CH 1/10W 47K	2	
R508	ERJ6GEYG471	M.RESISTOR CH 1/10W 470	1	
R509	ERJ6GEYJ221	M.RESISTOR CH 1/10W 220	1	
R510	ERJ6GEYJ392	M.RESISTOR CH 1/10W 3.9K	1	
R511	VRE0034E27B	M.RESISTOR CH 1/10W 1.87K	1	
R512	VRE0034E751	M.RESISTOR CH 1/10W 750	1	
R513	ERJ6GEYJ332	M.RESISTOR CH 1/10W 3.3K	1	
R514	ERJ6GEYJ102	M.RESISTOR CH 1/10W 1K	1	
R515	ERJ6GEYJ682	M.RESISTOR CH 1/10W 6.8K	1	
R516	ERJ6GEYG301	M.RESISTOR CH 1/10W 300	1	
R518	ERJ6GEYG431	M.RESISTOR CH 1/10W 430	1	
R519	ERJ6GEYJ332	M.RESISTOR CH 1/10W 3.3K	1	
R520	ERJ6GEYJ101	M.RESISTOR CH 1/10W 100	1	
R521	ERJ6GEYG151	M.RESISTOR CH 1/10W 150	1	
R522	VRE0034E26A	M.RESISTOR CH 1/10W 182	1	
R523	VRE0034E51A	M.RESISTOR CH 1/10W 357	1	
R524	VRE0034E89A	M.RESISTOR CH 1/10W 825	1	
R525	ERJ6GEYJ331	M.RESISTOR CH 1/10W 330	1	
R526,27	ERJ6GEYJ470	M.RESISTOR CH 1/10W 47	2	
R528	ERJ6GEYJ101	M.RESISTOR CH 1/10W 100	1	
R529	ERJ6GEYJ102	M.RESISTOR CH 1/10W 1K	1	
R530	ERJ6GEYJ681	M.RESISTOR CH 1/10W 680	1	
R531,32	ERJ6GEYJ273	M.RESISTOR CH 1/10W 27K	2	
R533,34	ERJ6GEYJ183	M.RESISTOR CH 1/10W 18K	2	
R535,36	ERJ6GEYJ221	M.RESISTOR CH 1/10W 220	2	
R537	ERJ6GEYG223	M.RESISTOR CH 1/10W 22K	1	
R538	ERJ6GEYJ470	M.RESISTOR CH 1/10W 47	1	
R539	ERJ6GEYG301	M.RESISTOR CH 1/10W 300	1	
R540	VRE0034E24A	M.RESISTOR 1/10W	1	
R541	VRE0034E89A	M.RESISTOR CH 1/10W 825	1	
R542	VRE0034E51A	M.RESISTOR CH 1/10W 357	1	
R543	VRE0034E89A	M.RESISTOR CH 1/10W 825	1	
R544	ERJ6GEYJ392	M.RESISTOR CH 1/10W 3.9K	1	
R545	ERJ6GEYJ222	M.RESISTOR CH 1/10W 2.2K	1	

Ref.No.	Part No.	Part Name & Description	Pcs	Remarks
R546	ERJ6GEYJ470	M.RESISTOR CH 1/10W 47	1	
R561-63	ERJ6GEYJ473	M.RESISTOR CH 1/10W 47K	3	
R564	ERJ6GEYJ222	M.RESISTOR CH 1/10W 2.2K	1	
R565	ERJ6GEYG223	M.RESISTOR CH 1/10W 22K	1	
R566	ERJ6GEYJ222	M.RESISTOR CH 1/10W 2.2K	1	
R567	ERJ6GEYG223	M.RESISTOR CH 1/10W 22K	1	
R620	ERJ6GEYJ101	M.RESISTOR CH 1/10W 100	1	
R624-26	ERJ6GEYJ103	M.RESISTOR CH 1/10W 10K	3	
R627	ERJ6GEYJ472	M.RESISTOR CH 1/10W 4.7K	1	
R628	ERJ6GEYG223	M.RESISTOR CH 1/10W 22K	1	
R629	ERJ6GEYJ472	M.RESISTOR CH 1/10W 4.7K	1	
R630,31	ERJ6GEYJ101	M.RESISTOR CH 1/10W 100	2	
R636	ERJ6GEYJ470	M.RESISTOR CH 1/10W 47	1	
R637	ERJ6GEYJ102	M.RESISTOR CH 1/10W 1K	1	
R639,40	ERJ6GEYJ331	M.RESISTOR CH 1/10W 330	2	
R644,45	ERJ6GEYJ470	M.RESISTOR CH 1/10W 47	2	
R646	ERJ6GEYJ682	M.RESISTOR CH 1/10W 6.8K	1	
R647,48	ERJ6GEYJ221	M.RESISTOR CH 1/10W 220	2	
R649	ERJ6GEYJ682	M.RESISTOR CH 1/10W 6.8K	1	
R650-53	ERJ6GEYJ101	M.RESISTOR CH 1/10W 100	4	
R656	ERJ6GEYJ470	M.RESISTOR CH 1/10W 47	1	
R660	VRE0034E51A	M.RESISTOR CH 1/10W 357	1	
R663	ERJ6GEYJ153	M.RESISTOR CH 1/10W 15K	1	
R664	ERJ6GEYK5R6	M.RESISTOR CH1/10W 5.6	1	
R665	ERJ6GEYJ100	M.RESISTOR CH 1/10W 10	1	
R668	ERJ6GEYJ472	M.RESISTOR CH 1/10W 4.7K	1	
R669	ERJ6GEYJ102	M.RESISTOR CH 1/10W 1K	1	
R670	ERJ6GEYJ681	M.RESISTOR CH 1/10W 680	1	
R671	ERJ6GEYJ472	M.RESISTOR CH 1/10W 4.7K	1	
R672	ERJ6GEYJ103	M.RESISTOR CH 1/10W 10K	1	
R673	ERJ6GEYJ470	M.RESISTOR CH 1/10W 47	1	
R674	ERJ6GEYJ222	M.RESISTOR CH 1/10W 2.2K	1	
R675,76	ERJ6GEYJ472	M.RESISTOR CH 1/10W 4.7K	2	
R677	ERJ6GEYJ681	M.RESISTOR CH 1/10W 680	1	
R678	ERJ6GEYJ472	M.RESISTOR CH 1/10W 4.7K	1	
R679	ERJ6GEYJ103	M.RESISTOR CH 1/10W 10K	1	
R680	ERJ6GEYJ470	M.RESISTOR CH 1/10W 47	1	
R681	ERJ6GEYJ104	M.RESISTOR CH 1/10W 100K	1	
R682	ERJ6GEYJ333	M.RESISTOR CH 1/10W 33K	1	
R701	ERJ6GEYJ470	M.RESISTOR CH 1/10W 47	1	
R702	ERJ6GEYJ102	M.RESISTOR CH 1/10W 1K	1	
R703	VRE0034E89A	M.RESISTOR CH 1/10W 825	1	
R704	VRE0034E51A	M.RESISTOR CH 1/10W 357	1	
R705	ERJ6GEYJ332	M.RESISTOR CH 1/10W 3.3K	1	
R712	ERJ6GEYJ470	M.RESISTOR CH 1/10W 47	1	
R723,24	ERJ6GEYJ101	M.RESISTOR CH 1/10W 100	2	
R725	ERJ6GEYJ102	M.RESISTOR CH 1/10W 1K	1	
R726	ERJ6GEYJ470	M.RESISTOR CH 1/10W 47	1	
R727	ERJ6GEYG471	M.RESISTOR CH 1/10W 470	1	
R728,29	ERJ6GEYJ470	M.RESISTOR CH 1/10W 47	2	
R730	ERJ6GEYG471	M.RESISTOR CH 1/10W 470	1	
R731	ERJ6GEYJ222	M.RESISTOR CH 1/10W 2.2K	1	
R732,33	ERJ6GEYG681	M.RESISTOR CH 1/10W 680	2	
R734	ERJ6GEYJ222	M.RESISTOR CH 1/10W 2.2K	1	
R735	ERJ6GEYJ470	M.RESISTOR CH 1/10W 47	1	
R736	VRE0034E43A	M.RESISTOR 1/10W	1	
R737	ERJ6GEYJ332	M.RESISTOR CH 1/10W 3.3K	1	
R738	VRE0034E89A	M.RESISTOR CH 1/10W 825	1	
R739	ERJ6GEYJ470	M.RESISTOR CH 1/10W 47	1	
R740	ERJ6GEYJ222	M.RESISTOR CH 1/10W 2.2K	1	
R741	ERJ6GEYJ182	M.RESISTOR CH 1/10W 1.8K	1	
R742	VRE0034E51A	M.RESISTOR CH 1/10W 357	1	
R743	ERJ6GEYJ153	M.RESISTOR CH 1/10W 15K	1	
R744	ERJ6GEYJ473	M.RESISTOR CH 1/10W 47K	1	
R745,46	ERJ6GEYJ220	M.RESISTOR CH 1/10W 22	2	
R747	ERJ6GEYJ470	M.RESISTOR CH 1/10W 47	1	
R748	ERJ6GEYJ152	M.RESISTOR CH 1/10W 1.5K	1	
R749	VRE0034E51A	M.RESISTOR CH 1/10W 357	1	
R750	ERJ6GEYJ102	M.RESISTOR CH 1/10W 1K	1	
R751	ERJ6GEYJ271	M.RESISTOR CH 1/10W 270	1	
R752	ERJ6GEYJ222	M.RESISTOR CH 1/10W 2.2K	1	
R753	ERJ6GEYJ472	M.RESISTOR CH 1/10W 4.7K	1	
R754	ERJ6GEYJ103	M.RESISTOR CH 1/10W 10K	1	
R755	ERJ6GEYJ472	M.RESISTOR CH 1/10W 4.7K	1	
R756	ERJ6GEYJ682	M.RESISTOR CH 1/10W 6.8K	1	

Ref.No.	Part No.	Part Name & Description	Pcs	Remarks
R758	ERJ6GEYJ101	M.RESISTOR CH 1/10W 100	1	
R759	ERJ6GEYJ222	M.RESISTOR CH 1/10W 2.2K	1	
R760	ERJ6GEYJ470	M.RESISTOR CH 1/10W 47	1	
R761	ERJ6GEYJ152	M.RESISTOR CH 1/10W 1.5K	1	
R762,63	ERJ6GEYG391	M.RESISTOR CH 1/10W 390	2	
R764	ERJ6GEYJ470	M.RESISTOR CH 1/10W 47	1	
R765	ERJ6GEYJ102	M.RESISTOR CH 1/10W 1K	1	
R766	ERJ6GEYJ681	M.RESISTOR CH 1/10W 680	1	
R767	ERJ6GEYJ102	M.RESISTOR CH 1/10W 1K	1	
R768	ERJ6GEYJ152	M.RESISTOR CH 1/10W 1.5K	1	
R769	ERJ6GEYJ470	M.RESISTOR CH 1/10W 47	1	
R770	ERJ6GEYJ221	M.RESISTOR CH 1/10W 220	1	
R771	ERJ6GEYJ222	M.RESISTOR CH 1/10W 2.2K	1	
R772	ERJ6GEYJ470	M.RESISTOR CH 1/10W 47	1	
R773	ERJ6GEYJ152	M.RESISTOR CH 1/10W 1.5K	1	
R774	ERJ6GEYJ331	M.RESISTOR CH 1/10W 330	1	
R775	VRE0034E51A	M.RESISTOR CH 1/10W 357	1	
R776	ERJ6GEYJ470	M.RESISTOR CH 1/10W 47	1	
R777	ERJ6GEYJ222	M.RESISTOR CH 1/10W 2.2K	1	
R778	ERJ6GEYJ470	M.RESISTOR CH 1/10W 47	1	
R789	ERJ6GEYJ470	M.RESISTOR CH 1/10W 47	1	
R790-97	ERJ6GEYJ102	M.RESISTOR CH 1/10W 1K	8	
R798,99	ERJ6GEYJ332	M.RESISTOR CH 1/10W 3.3K	2	
R800	ERJ6GEYJ101	M.RESISTOR CH 1/10W 100	1	
R801,02	ERJ6GEYG471	M.RESISTOR CH 1/10W 470	2	
R803	ERJ6GEYJ470	M.RESISTOR CH 1/10W 47	1	
R804,05	ERJ6GEYJ681	M.RESISTOR CH 1/10W 680	2	
R806,07	ERJ6GEYJ101	M.RESISTOR CH 1/10W 100	2	
R808	ERJ6GEYJ470	M.RESISTOR CH 1/10W 47	1	
R809	ERJ6GEYG151	M.RESISTOR CH 1/10W 150	1	
R810,11	ERJ6GEYJ222	M.RESISTOR CH 1/10W 2.2K	2	
R812	ERJ6GEYJ470	M.RESISTOR CH 1/10W 47	1	
R813,14	ERJ6GEYJ222	M.RESISTOR CH 1/10W 2.2K	2	
R815,16	ERJ6GEYJ470	M.RESISTOR CH 1/10W 47	2	
R817-28	ERJ6GEYJ102	M.RESISTOR CH 1/10W 1K	12	
R829	ERJ6GEYJ683	M.RESISTOR CH 1/10W 68K	1	
R830,31	ERJ6GEYJ103	M.RESISTOR CH 1/10W 10K	2	
R832,33	ERJ6GEYJ150	M.RESISTOR CH 1/10W 15	2	
R834,35	ERJ6GEYJ332	M.RESISTOR CH 1/10W 3.3K	2	
R836	ERJ6GEYJ101	M.RESISTOR CH 1/10W 100	1	
R837	ERDS2TJ222	C.RESISTOR 1/4W 2.2K	1	
R838-40	ERJ6GEYJ102	M.RESISTOR CH 1/10W 1K	3	
R842	ERJ6GEYJ222	M.RESISTOR CH 1/10W 2.2K	1	
R843,44	ERJ6GEYG471	M.RESISTOR CH 1/10W 470	2	
R845	ERJ6GEYJ470	M.RESISTOR CH 1/10W 47	1	
R846,47	ERJ6GEYJ333	M.RESISTOR CH 1/10W 33K	2	
R848,49	ERJ6GEYJ102	M.RESISTOR CH 1/10W 1K	2	
R850	ERJ6GEYJ222	M.RESISTOR CH 1/10W 2.2K	1	
R851	ERJ6GEYJ221	M.RESISTOR CH 1/10W 220	1	
R852	ERJ6GEYJ392	M.RESISTOR CH 1/10W 3.9K	1	
R853	ERJ6GEYJ470	M.RESISTOR CH 1/10W 47	1	
R854	ERJ6GEYG471	M.RESISTOR CH 1/10W 470	1	
R855	ERJ6GEYJ152	M.RESISTOR CH 1/10W 1.5K	1	
R856,57	ERJ6GEYJ101	M.RESISTOR CH 1/10W 100	2	
R858	ERJ6GEYJ222	M.RESISTOR CH 1/10W 2.2K	1	
R859	ERJ6GEYJ102	M.RESISTOR CH 1/10W 1K	1	
R860	ERJ6GEYJ101	M.RESISTOR CH 1/10W 100	1	
R861	ERJ6GEYJ332	M.RESISTOR CH 1/10W 3.3K	1	
R862	ERJ6GEYG223	M.RESISTOR CH 1/10W 22K	1	
R863	ERJ6GEYJ332	M.RESISTOR CH 1/10W 3.3K	1	
R864	ERJ6GEYJ472	M.RESISTOR CH 1/10W 4.7K	1	
R865	ERJ6GEYJ103	M.RESISTOR CH 1/10W 10K	1	
R866	ERJ6GEYJ184	M.RESISTOR CH 1/10W 180K	1	
R867	ERJ6GEYJ473	M.RESISTOR CH 1/10W 47K	1	
R868	ERJ6GEYG471	M.RESISTOR CH 1/10W 470	1	
R870	ERJ6GEYG471	M.RESISTOR CH 1/10W 470	1	
R871	ERJ6GEYJ221	M.RESISTOR CH 1/10W 220	1	
R872	ERJ6GEYJ392	M.RESISTOR CH 1/10W 3.9K	1	
R873	VRE0034E27B	M.RESISTOR CH 1/10W 1.87K	1	
R874	VRE0034E751	M.RESISTOR CH 1/10W 750	1	
R875	ERJ6GEYJ332	M.RESISTOR CH 1/10W 3.3K	1	
R876	ERJ6GEYJ102	M.RESISTOR CH 1/10W 1K	1	
R878	ERJ6GEYG301	M.RESISTOR CH 1/10W 300	1	
R879	ERJ6GEYG431	M.RESISTOR CH 1/10W 430	1	
R880	ERJ6GEYJ332	M.RESISTOR CH 1/10W 3.3K	1	

Ref.No.	Part No.	Part Name & Description	Pcs	Remarks
R881	ERJ6GEYJ101	M.RESISTOR CH 1/10W 100	1	
R882	ERJ6GEYG151	M.RESISTOR CH 1/10W 150	1	
R883	VRE0034E26A	M.RESISTOR CH 1/10W 182	1	
R884	ERJ6GEYJ391	M.RESISTOR CH 1/10W 390	1	
R885	VRE0034E89A	M.RESISTOR CH 1/10W 825	1	
R886,87	ERJ6GEYJ470	M.RESISTOR CH 1/10W 47	2	
R888	VRE0034E51A	M.RESISTOR CH 1/10W 357	1	
R889	ERJ6GEYJ681	M.RESISTOR CH 1/10W 680	1	
R890	ERJ6GEYJ273	M.RESISTOR CH 1/10W 27K	1	
R891	ERJ6GEYJ183	M.RESISTOR CH 1/10W 18K	1	
R892	ERJ6GEYJ221	M.RESISTOR CH 1/10W 220	1	
R893	ERJ6GEYJ273	M.RESISTOR CH 1/10W 27K	1	
R894	ERJ6GEYJ183	M.RESISTOR CH 1/10W 18K	1	
R895	ERJ6GEYJ221	M.RESISTOR CH 1/10W 220	1	
R896	ERJ6GEYG223	M.RESISTOR CH 1/10W 22K	1	
R897	ERJ6GEYJ470	M.RESISTOR CH 1/10W 47	1	
R898	VRE0034E24A	M.RESISTOR 1/10W	1	
R899	VRE0034E89A	M.RESISTOR CH 1/10W 825	1	
R900	ERJ6GEYG301	M.RESISTOR CH 1/10W 300	1	
R901	VRE0034E51A	M.RESISTOR CH 1/10W 357	1	
R902	VRE0034E89A	M.RESISTOR CH 1/10W 825	1	
R903	ERJ6GEYJ392	M.RESISTOR CH 1/10W 3.9K	1	
R904	ERJ6GEYJ470	M.RESISTOR CH 1/10W 47	1	
R905	ERJ6GEYJ222	M.RESISTOR CH 1/10W 2.2K	1	
R964	ERJ6GEYJ101	M.RESISTOR CH 1/10W 100	1	
R965	ERJ6GEYJ102	M.RESISTOR CH 1/10W 1K	1	
R966-68	ERJ6GEYJ103	M.RESISTOR CH 1/10W 10K	3	
R969,70	ERJ6GEYJ472	M.RESISTOR CH 1/10W 4.7K	2	
R971	ERJ6GEYG223	M.RESISTOR CH 1/10W 22K	1	
R975,76	ERJ6GEYJ470	M.RESISTOR CH 1/10W 47	2	
R977	ERJ6GEYJ682	M.RESISTOR CH 1/10W 6.8K	1	
R978,79	ERJ6GEYJ221	M.RESISTOR CH 1/10W 220	2	
R980	ERJ6GEYJ682	M.RESISTOR CH 1/10W 6.8K	1	
R981,82	ERJ6GEYJ101	M.RESISTOR CH 1/10W 100	2	
R985	ERJ6GEYJ470	M.RESISTOR CH 1/10W 47	1	
R986,87	VRE0034E51A	M.RESISTOR CH 1/10W 357	2	
R989	ERJ6GEYJ472	M.RESISTOR CH 1/10W 4.7K	1	
R993	VRE0034E51A	M.RESISTOR CH 1/10W 357	1	
R996	ERJ6GEYJ220	M.RESISTOR CH 1/10W 22	1	
R998,99	ERJ6GEYG151	M.RESISTOR CH 1/10W 150	2	
R1000	VRE0034E51A	M.RESISTOR CH 1/10W 357	1	
R1001	ERJ6GEYJ102	M.RESISTOR CH 1/10W 1K	1	
R1002	ERJ6GEYJ472	M.RESISTOR CH 1/10W 4.7K	1	
R1003	ERJ6GEYJ681	M.RESISTOR CH 1/10W 680	1	
R1004	ERJ6GEYJ472	M.RESISTOR CH 1/10W 4.7K	1	
R1005	ERJ6GEYJ103	M.RESISTOR CH 1/10W 10K	1	
R1006	ERJ6GEYJ470	M.RESISTOR CH 1/10W 47	1	
R1007	ERJ6GEYJ222	M.RESISTOR CH 1/10W 2.2K	1	
R1008,09	ERJ6GEYJ472	M.RESISTOR CH 1/10W 4.7K	2	
SW1	VSS0126	SWITCH	1	
SW201,02	VSS0126	SWITCH	2	
SW304	VSS0126	SWITCH	1	
SW704	VSS0126	SWITCH	1	
TP3-P8	VJR0646	TEST POINT	6	
TP201-07	VJR0646	TEST POINT	7	
TP301,02	VJR0646	TEST POINT	2	
TP307-11	VJR0646	TEST POINT	5	
TP315,16	VJR0646	TEST POINT	2	
TP701-08	VJR0646	TEST POINT	8	
TP711	VJR0646	TEST POINT	1	
TPG1,G2	VJR0646	TEST POINT	2	
TPG201,02	VJR0646	TEST POINT	2	
TPG301-03	VJR0646	TEST POINT	3	
TPG701-03	VJR0646	TEST POINT	3	
VC301	ECV1ZW10X53T	TRIMMER 10P	1	
VC701	ECV1ZW20X53T	V.CAPACITOR 20P	1	

Ref.No.	Part No.	Part Name & Description	Pcs	Remarks
VL201	EIR7QF015B	COIL	1	
VL301,02	EIR7QF016B	COIL	2	
VL701	EIR7QF016B	COIL	1	
VL702	EIR7QF015B	COIL	1	
VR1	VRV0064B501	V.RESISTOR 500	1	
VR3	VRV0109B202	V.RESISTOR 2K	1	
VR4	VRV0109B102	V.RESISTOR 1K	1	
VR5	VRV0109B203	V.RESISTOR 20K	1	
VR6	VRV0109B501	V.RESISTOR 500	1	
VR7	VRV0064B103	V.RESISTOR 10K	1	
VR8	VRV0109B503	V.RESISTOR 50K	1	
VR9	VRV0109B502	V.RESISTOR 5K	1	
VR10	VRV0109B503	V.RESISTOR 50K	1	
VR11	VRV0109B104	V.RESISTOR 100K	1	
VR201	VRV0064B501	V.RESISTOR 500	1	
VR202	VRV0109B203	V.RESISTOR 20K	1	
VR203	VRV0109B102	V.RESISTOR 1K	1	
VR204	VRV0109B501	V.RESISTOR 500	1	
VR205	VRV0109B503	V.RESISTOR 50K	1	
VR206	VRV0109B502	V.RESISTOR 5K	1	
VR207,08	VRV0109B503	V.RESISTOR 50K	2	
VR209	VRV0109B104	V.RESISTOR 100K	1	
VR301	VRV0109B501	V.RESISTOR 500	1	
VR302	VRV0109B102	V.RESISTOR 1K	1	
VR303	VRV0109B501	V.RESISTOR 500	1	
VR304	VRV0109B102	V.RESISTOR 1K	1	
VR309	VRV0109B101	V.RESISTOR 100	1	
VR310	VRV0109B502	V.RESISTOR 5K	1	
VR311	VRV0109B501	V.RESISTOR 500	1	
VR312	VRV0064B104	V.RESISTOR 100K	1	
VR315,16	VRV0064B502	V.RESISTOR 5K	2	
VR317	VRV0109B501	V.RESISTOR 500	1	
VR318	VRV0109B203	V.RESISTOR 20K	1	
VR319,20	VRV0109B102	V.RESISTOR 1K	2	
VR321	VRV0109B203	V.RESISTOR 20K	1	
VR322	VRV0109B102	V.RESISTOR 1K	1	
VR323	VRV0109B203	V.RESISTOR 20K	1	
VR324	VRV0109B102	V.RESISTOR 1K	1	
VR325	VRV0109B202	V.RESISTOR 2K	1	
VR701,02	VRV0109B501	V.RESISTOR 500	2	
VR712,13	VRV0064B502	V.RESISTOR 5K	2	
VR714	VRV0109B501	V.RESISTOR 500	1	
VR715	VRV0109B203	V.RESISTOR 20K	1	
VR716,17	VRV0109B102	V.RESISTOR 1K	2	
VR718	VRV0109B203	V.RESISTOR 20K	1	
VR719	VRV0109B102	V.RESISTOR 1K	1	
VR720	VRV0109B203	V.RESISTOR 20K	1	
VR721	VRV0109B102	V.RESISTOR 1K	1	
VR722	VRV0109B202	V.RESISTOR 2K	1	
VR727	VRV0109B101	V.RESISTOR 100	1	
		MISCELLANEOUS		
	VML2143	CARD PULLER	1	
	VML2144	CARD PULLER	1	
	VMZ1547	BARRIER	1	
	VXA3966	P.C.B. SHIELD PLATE	1	
	XYNV3+K6FR	SCREW	5	

Ref.No.		Part No.	Part Name & Description	Pcs	Remarks
	■	VEP83098F	P.C.BOARD W/COMPONENT		FOR AU-63H
			W3 MOD & DEMOD		
			CAPACITORS		
C62		ECUM1E104ZFN	C.CAPACITOR CH 25V 0.1U	1	
C63		ECEA1CU101	E.CAPACITOR 16V 100U	1	
C64		ECUM1E104ZFN	C.CAPACITOR CH 25V 0.1U	1	
C65		ECSF1CE106	E.CAPACITOR 16V 10U	1	
C66		ECUM1E104ZFN	C.CAPACITOR CH 25V 0.1U	1	
C67		ECSF1CE106	E.CAPACITOR 16V 10U	1	
C68		ECUM1E104ZFN	C.CAPACITOR CH 25V 0.1U	1	
C69,70		ECSF1CE106	E.CAPACITOR 16V 10U	2	
C71		ECUM1E104ZFN	C.CAPACITOR CH 25V 0.1U	1	
C72		ECEA1CU101	E.CAPACITOR 16V 100U	1	
C301,02		ECUM1H103KBN	C.CAPACITOR CH 50V 0.01U	2	
C303		ECUM1H220JCN	C.CAPACITOR CH 50V 22P	1	
C304,05		ECUM1H103KBN	C.CAPACITOR CH 50V 0.01U	2	
C306		ECUM1H220JCN	C.CAPACITOR CH 50V 22P	1	
C307		ECEA1AU101	E.CAPACITOR 10V 100U	1	
C308,09		ECUM1H103KBN	C.CAPACITOR CH 50V 0.01U	2	
C310		ECEA1AU101	E.CAPACITOR 10V 100U	1	
C311		ECUM1H103KBN	C.CAPACITOR CH 50V 0.01U	1	
C316		ECUM1E104ZFN	C.CAPACITOR CH 25V 0.1U	1	
C322		ECUM1E104ZFN	C.CAPACITOR CH 25V 0.1U	1	
C325		ECUM1E104ZFN	C.CAPACITOR CH 25V 0.1U	1	
C342		ECUM1H103KBN	C.CAPACITOR CH 50V 0.01U	1	
C343		ECUM1H150JCN	C.CAPACITOR CH 50V 15P	1	
C344		ECUM1H101JCN	C.CAPACITOR CH 50V 100P	1	
C345		ECUM1H100DCN	C.CAPACITOR CH 50V 10P	1	
C346		ECUM1H103KBN	C.CAPACITOR CH 50V 0.01U	1	
C347,48		ECEA1AU101	E.CAPACITOR 10V 100U	2	
C349		ECUM1H103KBN	C.CAPACITOR CH 50V 0.01U	1	
C350		ECUM1H820JCN	C.CAPACITOR CH 50V 82P	1	
C351,52		ECUM1H103KBN	C.CAPACITOR CH 50V 0.01U	2	
C353		ECUM1H680JCN	C.CAPACITOR CH 50V 68P	1	
C354,55		ECUM1H103KBN	C.CAPACITOR CH 50V 0.01U	2	
C356		ECUM1E104ZFN	C.CAPACITOR CH 25V 0.1U	1	
C357		ECEA1HU2R2	E.CAPACITOR 50V 2.2U	1	
C358		ECEA1AU101	E.CAPACITOR 10V 100U	1	
C359		ECUM1H103KBN	C.CAPACITOR CH 50V 0.01U	1	
C360		ECUM1H270JCN	C.CAPACITOR CH 50V 27P	1	
C363		ECUM1E104ZFN	C.CAPACITOR CH 25V 0.1U	1	
C373		ECEA1AU101	E.CAPACITOR 10V 100U	1	
C374		ECUM1H103KBN	C.CAPACITOR CH 50V 0.01U	1	
C375		ECEA1AU101	E.CAPACITOR 10V 100U	1	
C376-78		ECUM1H103KBN	C.CAPACITOR CH 50V 0.01U	3	
C380		ECUM1E104ZFN	C.CAPACITOR CH 25V 0.1U	1	
C381		ECUM1H103KBN	C.CAPACITOR CH 50V 0.01U	1	
C382		ECUM1E104ZFN	C.CAPACITOR CH 25V 0.1U	1	
C383		ECEA1AU101	E.CAPACITOR 10V 100U	1	
C386		ECUM1H050DCN	C.CAPACITOR CH 50V 50P	1	
C387		ECUM1H100DCN	C.CAPACITOR CH 50V 10P	1	
C389		ECUM1H331JCN	C.CAPACITOR CH 50V 330P	1	
C391		ECUM1H470JCN	C.CAPACITOR CH 50V 47P	1	
C392		ECUM1H103KBN	C.CAPACITOR CH 50V 0.01U	1	
C393		ECEA1AU101	E.CAPACITOR 10V 100U	1	
C394		ECUM1H103KBN	C.CAPACITOR CH 50V 0.01U	1	
C395		ECUM1E104ZFN	C.CAPACITOR CH 25V 0.1U	1	
C396,97		ECUM1H103KBN	C.CAPACITOR CH 50V 0.01U	2	
C398		ECUM1H180JCN	C.CAPACITOR CH 50V 18P	1	
C399		ECUM1H103KBN	C.CAPACITOR CH 50V 0.01U	1	
C400		ECUM1E104ZFN	C.CAPACITOR CH 25V 0.1U	1	
C401-03		ECUM1H103KBN	C.CAPACITOR CH 50V 0.01U	3	
C404		ECEA1AU101	E.CAPACITOR 10V 100U	1	
C405-07		ECUM1E104ZFN	C.CAPACITOR CH 25V 0.1U	3	
C408,09		ECUM1H270JCN	C.CAPACITOR CH 50V 27P	2	
C410		ECEA1AU471	E.CAPACITOR 10V 470U	1	
C411		ECUM1E104ZFN	C.CAPACITOR CH 25V 0.1U	1	

Ref.No.		Part No.	Part Name & Description	Pcs	Remarks
C412		ECUM1H221JCN	C.CAPACITOR CH 50V 220P	1	
C413		ECEA1AU101	E.CAPACITOR 10V 100U	1	
C414		ECUM1H470JCN	C.CAPACITOR CH 50V 47P	1	
C415		ECUM1H180JCN	C.CAPACITOR CH 50V 18P	1	
C416		ECUM1H181JCN	C.CAPACITOR CH 50V 180P	1	
C417,18		ECUM1E104ZFN	C.CAPACITOR CH 25V 0.1U	2	
C419		ECUM1H331JCN	C.CAPACITOR CH 50V 330P	1	
C420		ECUM1H220JCN	C.CAPACITOR CH 50V 22P	1	
C421		ECUM1H680JCN	C.CAPACITOR CH 50V 68P	1	
C422		ECUM1H330JCN	C.CAPACITOR CH 50V 33P	1	
C423		ECEA1AU101	E.CAPACITOR 10V 100U	1	
C424		ECEA1CU100	E.CAPACITOR 16V 10U	1	
C425		ECUM1H221JCN	C.CAPACITOR CH 50V 220P	1	
C426		VCM0044	M.CAPACITOR 130P	1	
C427		VCM0023	M.CAPACITOR 379P	1	
C428		ECUM1H680JCN	C.CAPACITOR CH 50V 68P	1	
C429		ECUM1H390JCN	C.CAPACITOR CH 50V 39P	1	
C430		ECUM1H331JCN	C.CAPACITOR CH 50V 330P	1	
C431		ECUM1H270JCN	C.CAPACITOR CH 50V 27P	1	
C432		ECEA0JU221	E.CAPACITOR 6.3V 220U	1	
C433		ECUM1H470JCN	C.CAPACITOR CH 50V 47P	1	
C434		ECUM1H560JCN	C.CAPACITOR CH 50V 56P	1	
C435		ECUM1H020CCN	C.CAPACITOR CH 50V 2P	1	
C436,37		ECUM1E104ZFN	C.CAPACITOR CH 25V 0.1U	2	
C440		ECUM1H470JCN	C.CAPACITOR CH 50V 47P	1	
C441		ECUM1H103KBN	C.CAPACITOR CH 50V 0.01U	1	
C442,43		ECEA1CU221	E.CAPACITOR 16V 220U	2	
C444,45		ECUM1H103KBN	C.CAPACITOR CH 50V 0.01U	2	
C446,47		VCM0027	M.CAPACITOR	2	
C448		ECEA1AU101	E.CAPACITOR 10V 100U	1	
C453		ECUM1E104ZFN	C.CAPACITOR CH 25V 0.1U	1	
C467		ECUM1E104ZFN	C.CAPACITOR CH 25V 0.1U	1	
C468		ECUM1H103KBN	C.CAPACITOR CH 50V 0.01U	1	
C470		ECUM1H330JCN	C.CAPACITOR CH 50V 33P	1	
C471		ECUM1H060DCN	C.CAPACITOR CH 50V 6P	1	
C472		VCC0037F062	C.CAPACITOR 50V 62P	1	
C473		ECUM1H182JN	C.CAPACITOR CH 50V 1800P	1	
C474		ECUM1E104ZFN	C.CAPACITOR CH 25V 0.1U	1	
C475		ECUM1H103KBN	C.CAPACITOR CH 50V 0.01U	1	
C476		ECEA1AU101	E.CAPACITOR 10V 100U	1	
C477		ECUM1H050DCN	C.CAPACITOR CH 50V 50P	1	
C478		ECEA1AU101	E.CAPACITOR 10V 100U	1	
C701,02		ECUM1H103KBN	C.CAPACITOR CH 50V 0.01U	2	
C703		ECEA1AU101	E.CAPACITOR 10V 100U	1	
C704,05		ECUM1H103KBN	C.CAPACITOR CH 50V 0.01U	2	
C706		ECUM1H330JCN	C.CAPACITOR CH 50V 33P	1	
C714		ECUM1H103KBN	C.CAPACITOR CH 50V 0.01U	1	
C725		ECUM1H180JCN	C.CAPACITOR CH 50V 18P	1	
C726		ECUM1H103KBN	C.CAPACITOR CH 50V 0.01U	1	
C727		ECUM1E104ZFN	C.CAPACITOR CH 25V 0.1U	1	
C728		ECUM1H220JCN	C.CAPACITOR CH 50V 22P	1	
C729		ECUM1H121JCN	C.CAPACITOR CH 50V 120P	1	
C730,31		ECUM1H103KBN	C.CAPACITOR CH 50V 0.01U	2	
C732		ECUM1H101JCN	C.CAPACITOR CH 50V 100P	1	
C733		ECEA1AU101	E.CAPACITOR 10V 100U	1	
C734		ECUM1H331JCN	C.CAPACITOR CH 50V 330P	1	
C735		ECEA1AU101	E.CAPACITOR 10V 100U	1	
C736		ECUM1H103KBN	C.CAPACITOR CH 50V 0.01U	1	
C737		ECUM1H101JCN	C.CAPACITOR CH 50V 100P	1	
C738		ECUM1H103KBN	C.CAPACITOR CH 50V 0.01U	1	
C740-42		ECUM1H103KBN	C.CAPACITOR CH 50V 0.01U	3	
C744		ECUM1E104ZFN	C.CAPACITOR CH 25V 0.1U	1	
C745		ECUM1H103KBN	C.CAPACITOR CH 50V 0.01U	1	
C746		ECUM1E104ZFN	C.CAPACITOR CH 25V 0.1U	1	
C747		ECEA1AU101	E.CAPACITOR 10V 100U	1	
C750		ECUM1H331JCN	C.CAPACITOR CH 50V 330P	1	
C751		ECUM1H101JCN	C.CAPACITOR CH 50V 100P	1	
C752		ECUM1H152JN	C.CAPACITOR CH 50V 1500P	1	
C753		ECUM1H220JCN	C.CAPACITOR CH 50V 22P	1	
C754		ECUM1H101JCN	C.CAPACITOR CH 50V 100P	1	
C755		ECUM1H220JCN	C.CAPACITOR CH 50V 22P	1	
C756		ECUM1H680JCN	C.CAPACITOR CH 50V 68P	1	
C757		ECUM1H150JCN	C.CAPACITOR CH 50V 15P	1	
C758		ECUM1H050DCN	C.CAPACITOR CH 50V 50P	1	
C759		ECUM1E104ZFN	C.CAPACITOR CH 25V 0.1U	1	

Ref.No.		Part No.	Part Name & Description	Pcs	Remarks
C760		ECUM1H100DCN	C.CAPACITOR CH 50V 10P	1	
C762		ECUM1H221JCN	C.CAPACITOR CH 50V 220P	1	
C763		ECUM1H101JCN	C.CAPACITOR CH 50V 100P	1	
C764-66		ECUM1H103KBN	C.CAPACITOR CH 50V 0.01U	3	
C767		ECEA1AU101	E.CAPACITOR 10V 100U	1	
C768,69		ECUM1H103KBN	C.CAPACITOR CH 50V 0.01U	2	
C770		ECUM1H220JCN	C.CAPACITOR CH 50V 22P	1	
C771		ECUM1H471JCN	C.CAPACITOR CH 50V 470P	1	
C772		ECUM1E104ZFN	C.CAPACITOR CH 25V 0.1U	1	
C773-75		ECUM1H103KBN	C.CAPACITOR CH 50V 0.01U	3	
C776		ECUM1E104ZFN	C.CAPACITOR CH 25V 0.1U	1	
C777		ECEA1AU101	E.CAPACITOR 10V 100U	1	
C778,79		ECUM1E104ZFN	C.CAPACITOR CH 25V 0.1U	2	
C780,81		ECUM1H390JCN	C.CAPACITOR CH 50V 39P	2	
C782		ECEA1AU471	E.CAPACITOR 10V 470U	1	
C783		ECUM1E104ZFN	C.CAPACITOR CH 25V 0.1U	1	
C784		ECUM1H221JCN	C.CAPACITOR CH 50V 220P	1	
C785		ECEA1AU101	E.CAPACITOR 10V 100U	1	
C786		ECUM1H121JCN	C.CAPACITOR CH 50V 120P	1	
C787		ECUM1H100DCN	C.CAPACITOR CH 50V 10P	1	
C788		ECUM1H331JCN	C.CAPACITOR CH 50V 330P	1	
C789,90		ECUM1E104ZFN	C.CAPACITOR CH 25V 0.1U	2	
C791		ECUM1H331JCN	C.CAPACITOR CH 50V 330P	1	
C792		ECUM1H220JCN	C.CAPACITOR CH 50V 22P	1	
C793		ECUM1H680JCN	C.CAPACITOR CH 50V 68P	1	
C794		ECUM1H330JCN	C.CAPACITOR CH 50V 33P	1	
C796		ECEA1CU100	E.CAPACITOR 16V 10U	1	
C797		VCM0023	M.CAPACITOR 379P	1	
C799		ECEA0JU221	E.CAPACITOR 6.3V 220U	1	
C800		ECUM1H470JCN	C.CAPACITOR CH 50V 47P	1	
C801		ECUM1H020CCN	C.CAPACITOR CH 50V 2P	1	
C802		ECUM1H121JCN	C.CAPACITOR CH 50V 120P	1	
C803,04		ECUM1E104ZFN	C.CAPACITOR CH 25V 0.1U	2	
C805		ECUM1H470JCN	C.CAPACITOR CH 50V 47P	1	
C808		ECEA1CU221	E.CAPACITOR 16V 220U	1	
C810		ECEA1CU221	E.CAPACITOR 16V 220U	1	
C811,12		ECUM1H103KBN	C.CAPACITOR CH 50V 0.01U	2	
C813,14		VCM0027	M.CAPACITOR	2	
C815		ECEA1AU101	E.CAPACITOR 10V 100U	1	
C821		ECUM1E104ZFN	C.CAPACITOR CH 25V 0.1U	1	
C836		ECUM1H470JCN	C.CAPACITOR CH 50V 47P	1	
C837		ECUM1H060DCN	C.CAPACITOR CH 50V 6P	1	
C838,39		ECUM1H100DCN	C.CAPACITOR CH 50V 10P	2	
C840		VCC0037F062	C.CAPACITOR 50V 62P	1	
C843		ECEA1AU101	E.CAPACITOR 10V 100U	1	
C844		ECUM1H103KBN	C.CAPACITOR CH 50V 0.01U	1	
C845		ECUM1H050DCN	C.CAPACITOR CH 50V 50P	1	
C846		ECEA1AU101	E.CAPACITOR 10V 100U	1	
D301		MA151WK	DIODE	1	
D303,04		MA151K	DIODE	2	
D305-07		MA151WK	DIODE	3	
D308,09		MA151WA	DIODE	2	
D701		MA151WK	DIODE	1	
D702-04		MA151K	DIODE	3	
D705,06		MA151WK	DIODE	2	
DL301		VLD0190	DELAY	1	
DL701		VLD0199	DELAY	1	
FL302		VLF0658	FILTER	1	
FL303		VLF0712	FILTER	1	
FL701		VLF0652	FILTER	1	
IC10		AN79N09	IC	1	
IC11,12		AN79M05F	IC	2	
IC13		AN78M05F	IC	1	

Ref.No.		Part No.	Part Name & Description	Pcs	Remarks
IC14		AN78N05	IC	1	
IC15		AN78N09	IC	1	
IC301		AN6308S	IC	1	
IC306		NJM1496M	IC	1	
IC307		UPD4053BG	IC	1	
IC309		RC082BM	IC	1	
IC310		AN6308S	IC	1	
IC311-15		10116D	IC	5	
IC316		SN74LS123NS	IC	1	
IC317		MC74HC00AF	IC	1	
IC319		NE5539D	IC	1	
IC326		RC082BM	IC	1	
IC327		AN6308S	IC	1	
IC701		AN6308S	IC	1	
IC705		NJM1496M	IC	1	
IC706		UPD4053BG	IC	1	
IC707		AN6308S	IC	1	
IC708-12		10116D	IC	5	
IC716		NE5539D	IC	1	
IC723		AN6308S	IC	1	
L301		VLQEL05S101K	COIL 100UH	1	
L302,03		VLQEL05S100J	COIL 10UH	2	
L304		VLQEL05S101K	COIL 100UH	1	
L308		VLQEL05S3R3J	COIL 3.3UH	1	
L309,10		VLQEL05S101K	COIL 100UH	2	
L311		VLQEL05S330J	COIL 33UH	1	
L312		VLQEL05S2R7J	COIL 2.7UH	1	
L313		VLQEL05S101K	COIL 100UH	1	
L314		VLQEL05S8R2J	COIL 8.2UH	1	
L316-18		VLQEL05S101K	COIL 100UH	3	
L320,21		VLQEL05S2R2J	COIL 2.2UH	2	
L322		VLQEL05S180J	COIL 18UH	1	
L323		VLQEL05S101K	COIL 100UH	1	
L324		VLQEL05S1R0J	COIL 1UH	1	
L325-27		VLQEL05S101K	COIL 100UH	3	
L328		VLQEL05S6R8J	COIL 6.8UH	1	
L329		VLQEL05S101K	COIL 100UH	1	
L330		VLQEL05S3R3J	COIL 3.3UH	1	
L333		VLQEL05S101K	COIL 100UH	1	
L334		VLQEL05S6R8K	COIL 6.8UH	1	
L345		VLQEL05S1R0J	COIL 1UH	1	
L346		VLQEL05SR47K	COIL 0.47UH	1	
L347		VLQEL05S101K	COIL 100UH	1	
L701		VLQEL05S101K	COIL 100UH	1	
L702		VLQEL05S150J	COIL 15UH	1	
L709		VLQEL05S4R7J	COIL 4.7UH	1	
L710		VLQEL05S101K	COIL 100UH	1	
L711		VLQEL05S560J	COIL 56UH	1	
L712		VLQEL05S101K	COIL 100UH	1	
L713		VLQEL05S3R9J	COIL 3.9UH	1	
L715		VLQEL05S101K	COIL 100UH	1	
L716		VLQEL05S471J	COIL 470UH	1	
L717		VLQEL05S330J	COIL 33UH	1	
L718		VLQEL05S3R3J	COIL 3.3UH	1	
L719		VLQEL05S8R2J	COIL 8.2UH	1	
L720		VLQEL05S6R8J	COIL 6.8UH	1	
L721		VLQEL05S4R7J	COIL 4.7UH	1	
L722		VLQEL05S2R7J	COIL 2.7UH	1	
L723		VLQEL05S5R6J	COIL 5.6UH	1	
L724		VLQEL05S101K	COIL 100UH	1	
L725		VLQEL05S1R5J	COIL 1.5UH	1	
L726-28		VLQEL05S101K	COIL 100UH	3	
L729		VLQEL05S150J	COIL 15UH	1	
L731		VLQEL05S101K	COIL 100UH	1	
L732		VLQEL05S6R8K	COIL 6.8UH	1	
L743		VLQEL05S181J	COIL 180UH	1	
L746		VLQEL05S101K	COIL 100UH	1	
Q301-04		2SC2295-B	TRANSISTOR CHIP	4	(B,C)
Q313,14		2SC2295-B	TRANSISTOR CHIP	2	(B,C)

Ref.No.	Part No.	Part Name & Description	Pcs	Remarks
Q315	2SA1022-B	TRANSISTOR CHIP	1	(B,C)
Q316	2SC2295-B	TRANSISTOR CHIP	1	(B,C)
Q317,18	2SA1022-B	TRANSISTOR CHIP	2	(B,C)
Q319	IMX4	TRANSISTOR	1	
Q320	UN2113	TRANSISTOR-RESISTOR	1	
Q321	2SC2295-B	TRANSISTOR CHIP	1	(B,C)
Q323	IMX4	TRANSISTOR	1	
Q324	2SC2295-B	TRANSISTOR CHIP	1	(B,C)
Q326	2SC2295-B	TRANSISTOR CHIP	1	(B,C)
Q327	2SA1022-B	TRANSISTOR CHIP	1	(B,C)
Q329-38	2SC2295-B	TRANSISTOR CHIP	10	(B,C)
Q339,40	UN2213	TRANSISTOR-RESISTOR	2	
Q341	2SA1462	TRANSISTOR	1	
Q342,43	2SC3757	TRANSISTOR	2	(Q,R)
Q344	2SC2295-B	TRANSISTOR CHIP	1	(B,C)
Q345	2SA1022-B	TRANSISTOR CHIP	1	(B,C)
Q346	2SC2480	TRANSISTOR	1	
Q347	2SA1462	TRANSISTOR	1	
Q348	2SC2480	TRANSISTOR	1	
Q349	2SA1226	TRANSISTOR	1	
Q356-61	UN2113	TRANSISTOR-RESISTOR	6	
Q376	2SA1462	TRANSISTOR	1	
Q377	2SA1226	TRANSISTOR	1	
Q378	2SC3757	TRANSISTOR	1	(Q,R)
Q379	2SC2480	TRANSISTOR	1	
Q382-84	2SC3757	TRANSISTOR	3	(Q,R)
Q385,86	2SC2295-B	TRANSISTOR CHIP	2	(B,C)
Q387	2SA1022-B	TRANSISTOR CHIP	1	(B,C)
Q388	2SD601-R	TRANSISTOR CHIP	1	(Q,R)
Q389	2SB709-R	TRANSISTOR CHIP	1	(Q,R)
Q390	2SA1226	TRANSISTOR	1	
Q391,92	2SD601-R	TRANSISTOR CHIP	2	(Q,R)
Q393	2SB709-R	TRANSISTOR CHIP	1	(Q,R)
Q701,02	2SA1022-B	TRANSISTOR CHIP	2	(B,C)
Q710,11	2SC2295-B	TRANSISTOR CHIP	2	(B,C)
Q712	2SA1022-B	TRANSISTOR CHIP	1	(B,C)
Q713	2SC2295-B	TRANSISTOR CHIP	1	(B,C)
Q714,15	2SA1022-B	TRANSISTOR CHIP	2	(B,C)
Q716	2SC2295-B	TRANSISTOR CHIP	1	(B,C)
Q718	2SC2295-B	TRANSISTOR CHIP	1	(B,C)
Q719	2SA1022-B	TRANSISTOR CHIP	1	(B,C)
Q721-30	2SC2295-B	TRANSISTOR CHIP	10	(B,C)
Q731	UN2213	TRANSISTOR-RESISTOR	1	
Q732	2SA1462	TRANSISTOR	1	
Q733	2SC2295-B	TRANSISTOR CHIP	1	(B,C)
Q734	2SA1022-B	TRANSISTOR CHIP	1	(B,C)
Q735	2SC2480	TRANSISTOR	1	
Q736	2SA1462	TRANSISTOR	1	
Q737	2SC2480	TRANSISTOR	1	
Q738	2SA1226	TRANSISTOR	1	
Q754	2SA1462	TRANSISTOR	1	
Q755	2SA1226	TRANSISTOR	1	
Q756	2SC3757	TRANSISTOR	1	(Q,R)
Q757	2SC2480	TRANSISTOR	1	
Q758-60	2SC3757	TRANSISTOR	3	(Q,R)
Q761	2SC2295-B	TRANSISTOR CHIP	1	(B,C)
Q762	2SA1022-B	TRANSISTOR CHIP	1	(B,C)
Q763	2SD601-R	TRANSISTOR CHIP	1	(Q,R)
Q764	2SB709-R	TRANSISTOR CHIP	1	(Q,R)
Q765	2SA1226	TRANSISTOR	1	
Q766	2SD601-R	TRANSISTOR CHIP	1	(Q,R)
		RESISTORS		
R20	ERJ6GEYJ472	M.RESISTOR CH 1/10W 4.7K	1	
R101	ERJ6GEYJ470	M.RESISTOR CH 1/10W 47	1	
R301	ERJ6GEYJ470	M.RESISTOR CH 1/10W 47	1	
R302	ERJ6GEYJ681	M.RESISTOR CH 1/10W 680	1	
R303	ERJ6GEYJ102	M.RESISTOR CH 1/10W 1K	1	
R304	ERJ6GEYJ332	M.RESISTOR CH 1/10W 3.3K	1	
R305	ERJ6GEYJ470	M.RESISTOR CH 1/10W 47	1	
R306	ERJ6GEYJ681	M.RESISTOR CH 1/10W 680	1	
R307	ERJ6GEYJ102	M.RESISTOR CH 1/10W 1K	1	
R308	ERJ6GEYJ332	M.RESISTOR CH 1/10W 3.3K	1	

Ref.No.	Part No.	Part Name & Description	Pcs	Remarks
R309	ERJ6GEYJ222	M.RESISTOR CH 1/10W 2.2K	1	
R310	ERJ6GEYJ470	M.RESISTOR CH 1/10W 47	1	
R332	ERJ6GEYJ152	M.RESISTOR CH 1/10W 1.5K	1	
R333,34	ERJ6GEYG471	M.RESISTOR CH 1/10W 470	2	
R335,36	ERJ6GEYJ470	M.RESISTOR CH 1/10W 47	2	
R337,38	ERJ6GEYJ222	M.RESISTOR CH 1/10W 2.2K	2	
R339,40	VRE0034E43A	M.RESISTOR 1/10W	2	
R341	ERJ6GEYJ470	M.RESISTOR CH 1/10W 47	1	
R342	VRE0034E43A	M.RESISTOR 1/10W	1	
R343	VRE0034E89A	M.RESISTOR CH 1/10W 825	1	
R344	ERJ6GEYJ470	M.RESISTOR CH 1/10W 47	1	
R345	ERJ6GEYJ222	M.RESISTOR CH 1/10W 2.2K	1	
R346	ERJ6GEYJ102	M.RESISTOR CH 1/10W 1K	1	
R347	VRE0034E51A	M.RESISTOR CH 1/10W 357	1	
R348	ERJ6GEYJ153	M.RESISTOR CH 1/10W 15K	1	
R349	ERJ6GEYG223	M.RESISTOR CH 1/10W 22K	1	
R350,51	ERJ6GEYJ220	M.RESISTOR CH 1/10W 22	2	
R352	ERJ6GEYJ470	M.RESISTOR CH 1/10W 47	1	
R353	ERJ6GEYJ152	M.RESISTOR CH 1/10W 1.5K	1	
R354	ERJ6GEYG471	M.RESISTOR CH 1/10W 470	1	
R355	ERJ6GEYJ102	M.RESISTOR CH 1/10W 1K	1	
R356	ERJ6GEYJ221	M.RESISTOR CH 1/10W 220	1	
R357	ERJ6GEYJ222	M.RESISTOR CH 1/10W 2.2K	1	
R358	ERJ6GEYJ101	M.RESISTOR CH 1/10W 100	1	
R359	ERJ6GEYJ472	M.RESISTOR CH 1/10W 4.7K	1	
R360,61	ERJ6GEYJ473	M.RESISTOR CH 1/10W 47K	2	
R362	ERJ6GEYJ472	M.RESISTOR CH 1/10W 4.7K	1	
R363,64	ERJ6GEYG223	M.RESISTOR CH 1/10W 22K	2	
R365	ERJ6GEYJ473	M.RESISTOR CH 1/10W 47K	1	
R366	ERJ6GEYG223	M.RESISTOR CH 1/10W 22K	1	
R367	ERJ6GEYJ683	M.RESISTOR CH 1/10W 68K	1	
R368	ERJ6GEYJ472	M.RESISTOR CH 1/10W 4.7K	1	
R369	ERJ6GEYJ103	M.RESISTOR CH 1/10W 10K	1	
R370	ERJ6GEYJ683	M.RESISTOR CH 1/10W 68K	1	
R371	ERJ6GEYJ682	M.RESISTOR CH 1/10W 6.8K	1	
R372	ERJ6GEYJ470	M.RESISTOR CH 1/10W 47	1	
R373	ERJ6GEYJ681	M.RESISTOR CH 1/10W 680	1	
R374	ERJ6GEYG151	M.RESISTOR CH 1/10W 150	1	
R375	ERJ6GEYJ470	M.RESISTOR CH 1/10W 47	1	
R386	ERJ6GEYJ103	M.RESISTOR CH 1/10W 10K	1	
R387,88	ERJ6GEYJ473	M.RESISTOR CH 1/10W 47K	2	
R389	ERJ6GEYJ103	M.RESISTOR CH 1/10W 10K	1	
R390	ERJ6GEYJ472	M.RESISTOR CH 1/10W 4.7K	1	
R391	ERJ6GEYJ474	M.RESISTOR CH 1/10W 470K	1	
R392	ERJ6GEYJ473	M.RESISTOR CH 1/10W 47K	1	
R393,94	ERJ6GEYG471	M.RESISTOR CH 1/10W 470	2	
R395	ERJ6GEYJ101	M.RESISTOR CH 1/10W 100	1	
R396	ERJ6GEYJ222	M.RESISTOR CH 1/10W 2.2K	1	
R397	ERJ6GEYJ470	M.RESISTOR CH 1/10W 47	1	
R398	ERJ6GEYJ152	M.RESISTOR CH 1/10W 1.5K	1	
R399,00	ERJ6GEYG301	M.RESISTOR CH 1/10W 300	2	
R401	ERJ6GEYJ470	M.RESISTOR CH 1/10W 47	1	
R402	ERJ6GEYJ102	M.RESISTOR CH 1/10W 1K	1	
R403	ERJ6GEYJ681	M.RESISTOR CH 1/10W 680	1	
R404	ERJ6GEYJ102	M.RESISTOR CH 1/10W 1K	1	
R405	ERJ6GEYJ152	M.RESISTOR CH 1/10W 1.5K	1	
R406	ERJ6GEYJ470	M.RESISTOR CH 1/10W 47	1	
R407	ERJ6GEYJ221	M.RESISTOR CH 1/10W 220	1	
R408	ERJ6GEYJ222	M.RESISTOR CH 1/10W 2.2K	1	
R409	ERJ6GEYJ470	M.RESISTOR CH 1/10W 47	1	
R410	ERJ6GEYJ152	M.RESISTOR CH 1/10W 1.5K	1	
R411	ERJ6GEYJ331	M.RESISTOR CH 1/10W 330	1	
R412	VRE0034E51A	M.RESISTOR CH 1/10W 357	1	
R413	ERJ6GEYJ470	M.RESISTOR CH 1/10W 47	1	
R414	ERJ6GEYJ222	M.RESISTOR CH 1/10W 2.2K	1	
R415	ERJ6GEYJ470	M.RESISTOR CH 1/10W 47	1	
R426	ERJ6GEYJ470	M.RESISTOR CH 1/10W 47	1	
R427-34	ERJ6GEYJ102	M.RESISTOR CH 1/10W 1K	8	
R435,36	ERJ6GEYJ332	M.RESISTOR CH 1/10W 3.3K	2	
R437	ERJ6GEYJ101	M.RESISTOR CH 1/10W 100	1	
R438,39	ERJ6GEYG471	M.RESISTOR CH 1/10W 470	2	
R440	ERJ6GEYJ470	M.RESISTOR CH 1/10W 47	1	
R441,42	ERJ6GEYJ681	M.RESISTOR CH 1/10W 680	2	
R443,44	ERJ6GEYJ101	M.RESISTOR CH 1/10W 100	2	
R445	ERJ6GEYJ470	M.RESISTOR CH 1/10W 47	1	

Ref.No.	Part No.	Part Name & Description	Pcs	Remarks
R446	ERJ6GEYG151	M.RESISTOR CH 1/10W 150	1	
R447,48	ERJ6GEYJ222	M.RESISTOR CH 1/10W 2.2K	2	
R449	ERJ6GEYJ470	M.RESISTOR CH 1/10W 47	1	
R450,51	ERJ6GEYJ222	M.RESISTOR CH 1/10W 2.2K	2	
R452,53	ERJ6GEYJ470	M.RESISTOR CH 1/10W 47	2	
R454-65	ERJ6GEYJ102	M.RESISTOR CH 1/10W 1K	12	
R466	ERJ6GEYJ683	M.RESISTOR CH 1/10W 68K	1	
R467,68	ERJ6GEYJ103	M.RESISTOR CH 1/10W 10K	2	
R469,70	ERJ6GEYJ680	M.RESISTOR CH 1/10W 68	2	
R471,72	ERJ6GEYJ332	M.RESISTOR CH 1/10W 3.3K	2	
R473	ERJ6GEYJ101	M.RESISTOR CH 1/10W 100	1	
R474	ERDS2TJ222	C.RESISTOR 1/4W 2.2K	1	
R475	ERJ6GEYJ102	M.RESISTOR CH 1/10W 1K	1	
R477	ERJ6GEYG471	M.RESISTOR CH 1/10W 470	1	
R478	ERJ6GEYJ102	M.RESISTOR CH 1/10W 1K	1	
R479	ERJ6GEYJ222	M.RESISTOR CH 1/10W 2.2K	1	
R480,81	ERJ6GEYG471	M.RESISTOR CH 1/10W 470	2	
R482	ERJ6GEYJ470	M.RESISTOR CH 1/10W 47	1	
R483,84	ERJ6GEYJ333	M.RESISTOR CH 1/10W 33K	2	
R485,86	ERJ6GEYJ102	M.RESISTOR CH 1/10W 1K	2	
R487	ERJ6GEYJ222	M.RESISTOR CH 1/10W 2.2K	1	
R488	ERJ6GEYJ221	M.RESISTOR CH 1/10W 220	1	
R489	ERJ6GEYJ392	M.RESISTOR CH 1/10W 3.9K	1	
R490	ERJ6GEYJ470	M.RESISTOR CH 1/10W 47	1	
R491	ERJ6GEYG223	M.RESISTOR CH 1/10W 22K	1	
R492	ERJ6GEYG471	M.RESISTOR CH 1/10W 470	1	
R493	ERJ6GEYJ152	M.RESISTOR CH 1/10W 1.5K	1	
R494,95	ERJ6GEYJ101	M.RESISTOR CH 1/10W 100	2	
R496	ERJ6GEYJ222	M.RESISTOR CH 1/10W 2.2K	1	
R497	ERJ6GEYJ102	M.RESISTOR CH 1/10W 1K	1	
R498	ERJ6GEYJ101	M.RESISTOR CH 1/10W 100	1	
R499	ERJ6GEYJ332	M.RESISTOR CH 1/10W 3.3K	1	
R500	ERJ6GEYG223	M.RESISTOR CH 1/10W 22K	1	
R501	ERJ6GEYJ332	M.RESISTOR CH 1/10W 3.3K	1	
R502	ERJ6GEYJ472	M.RESISTOR CH 1/10W 4.7K	1	
R503	ERJ6GEYJ103	M.RESISTOR CH 1/10W 10K	1	
R504	ERJ6GEYJ184	M.RESISTOR CH 1/10W 180K	1	
R505,06	ERJ6GEYJ473	M.RESISTOR CH 1/10W 47K	2	
R508	ERJ6GEYG471	M.RESISTOR CH 1/10W 470	1	
R509	ERJ6GEYJ221	M.RESISTOR CH 1/10W 220	1	
R510	ERJ6GEYJ392	M.RESISTOR CH 1/10W 3.9K	1	
R511	VRE0034E27B	M.RESISTOR CH 1/10W 1.87K	1	
R512	VRE0034E751	M.RESISTOR CH 1/10W 750	1	
R513	ERJ6GEYJ332	M.RESISTOR CH 1/10W 3.3K	1	
R514	ERJ6GEYJ102	M.RESISTOR CH 1/10W 1K	1	
R515	ERJ6GEYJ682	M.RESISTOR CH 1/10W 6.8K	1	
R516	ERJ6GEYG301	M.RESISTOR CH 1/10W 300	1	
R518	ERJ6GEYG431	M.RESISTOR CH 1/10W 430	1	
R519	ERJ6GEYJ332	M.RESISTOR CH 1/10W 3.3K	1	
R520	ERJ6GEYJ101	M.RESISTOR CH 1/10W 100	1	
R521	ERJ6GEYG151	M.RESISTOR CH 1/10W 150	1	
R522	VRE0034E26A	M.RESISTOR CH 1/10W 182	1	
R523	VRE0034E51A	M.RESISTOR CH 1/10W 357	1	
R524	VRE0034E89A	M.RESISTOR CH 1/10W 825	1	
R525	ERJ6GEYG331	M.RESISTOR CH 1/10W 330	1	
R526,27	ERJ6GEYJ470	M.RESISTOR CH 1/10W 47	2	
R528	ERJ6GEYJ101	M.RESISTOR CH 1/10W 100	1	
R529	ERJ6GEYJ102	M.RESISTOR CH 1/10W 1K	1	
R530	ERJ6GEYJ681	M.RESISTOR CH 1/10W 680	1	
R531,32	ERJ6GEYJ273	M.RESISTOR CH 1/10W 27K	2	
R533,34	ERJ6GEYJ183	M.RESISTOR CH 1/10W 18K	2	
R535,36	ERJ6GEYJ221	M.RESISTOR CH 1/10W 220	2	
R537	ERJ6GEYG223	M.RESISTOR CH 1/10W 22K	1	
R538	ERJ6GEYJ470	M.RESISTOR CH 1/10W 47	1	
R539	ERJ6GEYG301	M.RESISTOR CH 1/10W 300	1	
R540	VRE0034E24A	M.RESISTOR 1/10W	1	
R541	VRE0034E89A	M.RESISTOR CH 1/10W 825	1	
R542	VRE0034E51A	M.RESISTOR CH 1/10W 357	1	
R543	VRE0034E89A	M.RESISTOR CH 1/10W 825	1	
R544	ERJ6GEYJ392	M.RESISTOR CH 1/10W 3.9K	1	
R545	ERJ6GEYJ222	M.RESISTOR CH 1/10W 2.2K	1	
R546	ERJ6GEYJ470	M.RESISTOR CH 1/10W 47	1	
R561-63	ERJ6GEYJ473	M.RESISTOR CH 1/10W 47K	3	
R564	ERJ6GEYJ222	M.RESISTOR CH 1/10W 2.2K	1	
R565	ERJ6GEYG223	M.RESISTOR CH 1/10W 22K	1	

Ref.No.	Part No.	Part Name & Description	Pcs	Remarks
R566	ERJ6GEYJ222	M.RESISTOR CH 1/10W 2.2K	1	
R567	ERJ6GEYG223	M.RESISTOR CH 1/10W 22K	1	
R620	ERJ6GEYJ101	M.RESISTOR CH 1/10W 100	1	
R624-26	ERJ6GEYJ103	M.RESISTOR CH 1/10W 10K	3	
R627	ERJ6GEYJ472	M.RESISTOR CH 1/10W 4.7K	1	
R628	ERJ6GEYG223	M.RESISTOR CH 1/10W 22K	1	
R629	ERJ6GEYJ472	M.RESISTOR CH 1/10W 4.7K	1	
R630,31	ERJ6GEYJ101	M.RESISTOR CH 1/10W 100	2	
R636	ERJ6GEYJ470	M.RESISTOR CH 1/10W 47	1	
R637	ERJ6GEYJ102	M.RESISTOR CH 1/10W 1K	1	
R639,40	ERJ6GEYJ331	M.RESISTOR CH 1/10W 330	2	
R644,45	ERJ6GEYJ470	M.RESISTOR CH 1/10W 47	2	
R646	ERJ6GEYJ682	M.RESISTOR CH 1/10W 6.8K	1	
R647,48	ERJ6GEYJ221	M.RESISTOR CH 1/10W 220	2	
R649	ERJ6GEYJ682	M.RESISTOR CH 1/10W 6.8K	1	
R650-53	ERJ6GEYJ101	M.RESISTOR CH 1/10W 100	4	
R656	ERJ6GEYJ470	M.RESISTOR CH 1/10W 47	1	
R657	ERDS2T0	C.RESISTOR 1/4W 0	1	
R660	VRE0034E51A	M.RESISTOR CH 1/10W 357	1	
R663	ERJ6GEYJ153	M.RESISTOR CH 1/10W 15K	1	
R664	ERJ6GEYK5R6	M.RESISTOR CH 1/10W 5.6	1	
R665	ERJ6GEYJ100	M.RESISTOR CH 1/10W 10	1	
R668	ERJ6GEYJ472	M.RESISTOR CH 1/10W 4.7K	1	
R669	ERJ6GEYJ102	M.RESISTOR CH 1/10W 1K	1	
R670	ERJ6GEYJ681	M.RESISTOR CH 1/10W 680	1	
R671	ERJ6GEYJ472	M.RESISTOR CH 1/10W 4.7K	1	
R672	ERJ6GEYJ103	M.RESISTOR CH 1/10W 10K	1	
R673	ERJ6GEYJ470	M.RESISTOR CH 1/10W 47	1	
R674	ERJ6GEYJ222	M.RESISTOR CH 1/10W 2.2K	1	
R675,76	ERJ6GEYJ472	M.RESISTOR CH 1/10W 4.7K	2	
R677	ERJ6GEYJ681	M.RESISTOR CH 1/10W 680	1	
R678	ERJ6GEYJ472	M.RESISTOR CH 1/10W 4.7K	1	
R679	ERJ6GEYJ103	M.RESISTOR CH 1/10W 10K	1	
R680	ERJ6GEYJ470	M.RESISTOR CH 1/10W 47	1	
R681	ERJ6GEYJ104	M.RESISTOR CH 1/10W 100K	1	
R682	ERJ6GEYJ333	M.RESISTOR CH 1/10W 33K	1	
R701	ERJ6GEYJ470	M.RESISTOR CH 1/10W 47	1	
R702	ERJ6GEYJ102	M.RESISTOR CH 1/10W 1K	1	
R703	VRE0034E89A	M.RESISTOR CH 1/10W 825	1	
R704	VRE0034E51A	M.RESISTOR CH 1/10W 357	1	
R705	ERJ6GEYJ681	M.RESISTOR CH 1/10W 680	1	
R711,12	ERJ6GEYJ470	M.RESISTOR CH 1/10W 47	2	
R723,24	ERJ6GEYJ101	M.RESISTOR CH 1/10W 100	2	
R725	ERJ6GEYJ102	M.RESISTOR CH 1/10W 1K	1	
R726	ERJ6GEYJ470	M.RESISTOR CH 1/10W 47	1	
R727	ERJ6GEYG471	M.RESISTOR CH 1/10W 470	1	
R728,29	ERJ6GEYJ470	M.RESISTOR CH 1/10W 47	2	
R730	ERJ6GEYG471	M.RESISTOR CH 1/10W 470	1	
R731	ERJ6GEYJ222	M.RESISTOR CH 1/10W 2.2K	1	
R732,33	ERJ6GEYG681	M.RESISTOR CH 1/10W 680	2	
R734	ERJ6GEYJ222	M.RESISTOR CH 1/10W 2.2K	1	
R735	ERJ6GEYJ470	M.RESISTOR CH 1/10W 47	1	
R736	VRE0034E43A	M.RESISTOR 1/10W	1	
R737	ERJ6GEYJ332	M.RESISTOR CH 1/10W 3.3K	1	
R738	VRE0034E89A	M.RESISTOR CH 1/10W 825	1	
R739	ERJ6GEYJ470	M.RESISTOR CH 1/10W 47	1	
R740	ERJ6GEYJ222	M.RESISTOR CH 1/10W 2.2K	1	
R741	ERJ6GEYJ182	M.RESISTOR CH 1/10W 1.8K	1	
R742	VRE0034E51A	M.RESISTOR CH 1/10W 357	1	
R743	ERJ6GEYJ153	M.RESISTOR CH 1/10W 15K	1	
R744	ERJ6GEYJ473	M.RESISTOR CH 1/10W 47K	1	
R745,46	ERJ6GEYJ220	M.RESISTOR CH 1/10W 22	2	
R747	ERJ6GEYJ470	M.RESISTOR CH 1/10W 47	1	
R748	ERJ6GEYJ152	M.RESISTOR CH 1/10W 1.5K	1	
R749	VRE0034E51A	M.RESISTOR CH 1/10W 357	1	
R750	ERJ6GEYJ102	M.RESISTOR CH 1/10W 1K	1	
R751	ERJ6GEYJ271	M.RESISTOR CH 1/10W 270	1	
R752	ERJ6GEYJ222	M.RESISTOR CH 1/10W 2.2K	1	
R753	ERJ6GEYJ472	M.RESISTOR CH 1/10W 4.7K	1	
R754	ERJ6GEYJ103	M.RESISTOR CH 1/10W 10K	1	
R755	ERJ6GEYJ472	M.RESISTOR CH 1/10W 4.7K	1	
R756	ERJ6GEYJ682	M.RESISTOR CH 1/10W 6.8K	1	
R757	ERJ6GEYG471	M.RESISTOR CH 1/10W 470	1	
R758	ERJ6GEYJ101	M.RESISTOR CH 1/10W 100	1	
R759	ERJ6GEYJ222	M.RESISTOR CH 1/10W 2.2K	1	

Ref.No.	Part No.	Part Name & Description	Pcs	Remarks
R760	ERJ6GEYJ470	M.RESISTOR CH 1/10W 47	1	
R761	ERJ6GEYJ152	M.RESISTOR CH 1/10W 1.5K	1	
R762,63	ERJ6GEYG391	M.RESISTOR CH 1/10W 390	2	
R764	ERJ6GEYJ470	M.RESISTOR CH 1/10W 47	1	
R765	ERJ6GEYJ102	M.RESISTOR CH 1/10W 1K	1	
R766	ERJ6GEYJ681	M.RESISTOR CH 1/10W 680	1	
R767	ERJ6GEYJ102	M.RESISTOR CH 1/10W 1K	1	
R768	ERJ6GEYJ152	M.RESISTOR CH 1/10W 1.5K	1	
R769	ERJ6GEYJ470	M.RESISTOR CH 1/10W 47	1	
R770	ERJ6GEYJ221	M.RESISTOR CH 1/10W 220	1	
R771	ERJ6GEYJ222	M.RESISTOR CH 1/10W 2.2K	1	
R772	ERJ6GEYJ470	M.RESISTOR CH 1/10W 47	1	
R773	ERJ6GEYJ152	M.RESISTOR CH 1/10W 1.5K	1	
R774	ERJ6GEYJ331	M.RESISTOR CH 1/10W 330	1	
R775	VRE0034E51A	M.RESISTOR CH 1/10W 357	1	
R776	ERJ6GEYJ470	M.RESISTOR CH 1/10W 47	1	
R777	ERJ6GEYJ222	M.RESISTOR CH 1/10W 2.2K	1	
R778	ERJ6GEYJ470	M.RESISTOR CH 1/10W 47	1	
R789	ERJ6GEYJ470	M.RESISTOR CH 1/10W 47	1	
R790-97	ERJ6GEYJ102	M.RESISTOR CH 1/10W 1K	8	
R798,99	ERJ6GEYJ332	M.RESISTOR CH 1/10W 3.3K	2	
R800	ERJ6GEYJ101	M.RESISTOR CH 1/10W 100	1	
R801,02	ERJ6GEYG471	M.RESISTOR CH 1/10W 470	2	
R803	ERJ6GEYJ470	M.RESISTOR CH 1/10W 47	1	
R804,05	ERJ6GEYJ681	M.RESISTOR CH 1/10W 680	2	
R806,07	ERJ6GEYJ101	M.RESISTOR CH 1/10W 100	2	
R808	ERJ6GEYJ470	M.RESISTOR CH 1/10W 47	1	
R809	ERJ6GEYG151	M.RESISTOR CH 1/10W 150	1	
R810,11	ERJ6GEYJ222	M.RESISTOR CH 1/10W 2.2K	2	
R812	ERJ6GEYJ470	M.RESISTOR CH 1/10W 47	1	
R813,14	ERJ6GEYJ222	M.RESISTOR CH 1/10W 2.2K	2	
R815,16	ERJ6GEYJ470	M.RESISTOR CH 1/10W 47	2	
R817-28	ERJ6GEYJ102	M.RESISTOR CH 1/10W 1K	12	
R829	ERJ6GEYJ683	M.RESISTOR CH 1/10W 68K	1	
R830,31	ERJ6GEYJ103	M.RESISTOR CH 1/10W 10K	2	
R832,33	ERJ6GEYJ150	M.RESISTOR CH 1/10W 15	2	
R834,35	ERJ6GEYJ332	M.RESISTOR CH 1/10W 3.3K	2	
R836	ERJ6GEYJ101	M.RESISTOR CH 1/10W 100	1	
R837	ERDS2TJ222	C.RESISTOR 1/4W 2.2K	1	
R838-40	ERJ6GEYJ102	M.RESISTOR CH 1/10W 1K	3	
R842	ERJ6GEYJ222	M.RESISTOR CH 1/10W 2.2K	1	
R843,44	ERJ6GEYG471	M.RESISTOR CH 1/10W 470	2	
R845	ERJ6GEYJ470	M.RESISTOR CH 1/10W 47	1	
R846,47	ERJ6GEYJ333	M.RESISTOR CH 1/10W 33K	2	
R848,49	ERJ6GEYJ102	M.RESISTOR CH 1/10W 1K	2	
R850	ERJ6GEYJ222	M.RESISTOR CH 1/10W 2.2K	1	
R851	ERJ6GEYJ221	M.RESISTOR CH 1/10W 220	1	
R852	ERJ6GEYJ392	M.RESISTOR CH 1/10W 3.9K	1	
R853	ERJ6GEYJ470	M.RESISTOR CH 1/10W 47	1	
R854	ERJ6GEYG471	M.RESISTOR CH 1/10W 470	1	
R855	ERJ6GEYJ152	M.RESISTOR CH 1/10W 1.5K	1	
R856,57	ERJ6GEYJ101	M.RESISTOR CH 1/10W 100	2	
R858	ERJ6GEYJ222	M.RESISTOR CH 1/10W 2.2K	1	
R859	ERJ6GEYJ102	M.RESISTOR CH 1/10W 1K	1	
R860	ERJ6GEYJ101	M.RESISTOR CH 1/10W 100	1	
R861	ERJ6GEYJ332	M.RESISTOR CH 1/10W 3.3K	1	
R862	ERJ6GEYG223	M.RESISTOR CH 1/10W 22K	1	
R863	ERJ6GEYJ332	M.RESISTOR CH 1/10W 3.3K	1	
R864	ERJ6GEYJ472	M.RESISTOR CH 1/10W 4.7K	1	
R865	ERJ6GEYJ103	M.RESISTOR CH 1/10W 10K	1	
R866	ERJ6GEYJ184	M.RESISTOR CH 1/10W 180K	1	
R867	ERJ6GEYJ473	M.RESISTOR CH 1/10W 47K	1	
R868	ERJ6GEYG471	M.RESISTOR CH 1/10W 470	1	
R870	ERJ6GEYG471	M.RESISTOR CH 1/10W 470	1	
R871	ERJ6GEYJ221	M.RESISTOR CH 1/10W 220	1	
R872	ERJ6GEYJ392	M.RESISTOR CH 1/10W 3.9K	1	
R873	VRE0034E27B	M.RESISTOR CH 1/10W 1.87K	1	
R874	VRE0034E751	M.RESISTOR CH 1/10W 750	1	
R875	ERJ6GEYJ332	M.RESISTOR CH 1/10W 3.3K	1	
R876	ERJ6GEYJ102	M.RESISTOR CH 1/10W 1K	1	
R878	ERJ6GEYG301	M.RESISTOR CH 1/10W 300	1	
R879	ERJ6GEYG431	M.RESISTOR CH 1/10W 430	1	
R880	ERJ6GEYJ332	M.RESISTOR CH 1/10W 3.3K	1	
R881	ERJ6GEYJ101	M.RESISTOR CH 1/10W 100	1	
R882	ERJ6GEYG151	M.RESISTOR CH 1/10W 150	1	

Ref.No.	Part No.	Part Name & Description	Pcs	Remarks
R883	VRE0034E26A	M.RESISTOR CH 1/10W 182	1	
R884	ERJ6GEYJ391	M.RESISTOR CH 1/10W 390	1	
R885	VRE0034E89A	M.RESISTOR CH 1/10W 825	1	
R886,87	ERJ6GEYJ470	M.RESISTOR CH 1/10W 47	2	
R888	VRE0034E51A	M.RESISTOR CH 1/10W 357	1	
R889	ERJ6GEYJ681	M.RESISTOR CH 1/10W 680	1	
R890	ERJ6GEYJ273	M.RESISTOR CH 1/10W 27K	1	
R891	ERJ6GEYJ183	M.RESISTOR CH 1/10W 18K	1	
R892	ERJ6GEYJ221	M.RESISTOR CH 1/10W 220	1	
R893	ERJ6GEYJ273	M.RESISTOR CH 1/10W 27K	1	
R894	ERJ6GEYJ183	M.RESISTOR CH 1/10W 18K	1	
R895	ERJ6GEYJ221	M.RESISTOR CH 1/10W 220	1	
R896	ERJ6GEYG223	M.RESISTOR CH 1/10W 22K	1	
R897	ERJ6GEYJ470	M.RESISTOR CH 1/10W 47	1	
R898	VRE0034E24A	M.RESISTOR 1/10W	1	
R899	VRE0034E89A	M.RESISTOR CH 1/10W 825	1	
R900	ERJ6GEYG301	M.RESISTOR CH 1/10W 300	1	
R901	VRE0034E51A	M.RESISTOR CH 1/10W 357	1	
R902	VRE0034E89A	M.RESISTOR CH 1/10W 825	1	
R903	ERJ6GEYJ392	M.RESISTOR CH 1/10W 3.9K	1	
R904	ERJ6GEYJ470	M.RESISTOR CH 1/10W 47	1	
R905	ERJ6GEYJ222	M.RESISTOR CH 1/10W 2.2K	1	
R964	ERJ6GEYJ101	M.RESISTOR CH 1/10W 100	1	
R965	ERJ6GEYJ102	M.RESISTOR CH 1/10W 1K	1	
R966-68	ERJ6GEYJ103	M.RESISTOR CH 1/10W 10K	3	
R969,70	ERJ6GEYJ472	M.RESISTOR CH 1/10W 4.7K	2	
R971	ERJ6GEYG223	M.RESISTOR CH 1/10W 22K	1	
R975,76	ERJ6GEYJ470	M.RESISTOR CH 1/10W 47	2	
R977	ERJ6GEYJ682	M.RESISTOR CH 1/10W 6.8K	1	
R978,79	ERJ6GEYJ221	M.RESISTOR CH 1/10W 220	2	
R980	ERJ6GEYJ682	M.RESISTOR CH 1/10W 6.8K	1	
R981,82	ERJ6GEYJ101	M.RESISTOR CH 1/10W 100	2	
R985	ERJ6GEYJ470	M.RESISTOR CH 1/10W 47	1	
R986,87	VRE0034E51A	M.RESISTOR CH 1/10W 357	2	
R989	ERJ6GEYJ472	M.RESISTOR CH 1/10W 4.7K	1	
R991	ERJ6GEY0R00	M.RESISTOR CH 1/10W 0	1	
R992	ERDS2T0	C.RESISTOR 1/4W 0	1	
R993	VRE0034E51A	M.RESISTOR CH 1/10W 357	1	
R996	ERJ6GEYJ220	M.RESISTOR CH 1/10W 22	1	
R1001	ERJ6GEYJ102	M.RESISTOR CH 1/10W 1K	1	
R1002	ERJ6GEYJ472	M.RESISTOR CH 1/10W 4.7K	1	
R1003	ERJ6GEYJ681	M.RESISTOR CH 1/10W 680	1	
R1004	ERJ6GEYJ472	M.RESISTOR CH 1/10W 4.7K	1	
R1005	ERJ6GEYJ103	M.RESISTOR CH 1/10W 10K	1	
R1006	ERJ6GEYJ470	M.RESISTOR CH 1/10W 47	1	
R1007	ERJ6GEYJ222	M.RESISTOR CH 1/10W 2.2K	1	
R1008,09	ERJ6GEYJ472	M.RESISTOR CH 1/10W 4.7K	2	
SW304	VSS0126	SWITCH	1	
SW704	VSS0126	SWITCH	1	
TP301,02	VJR0646	TEST POINT	2	
TP306-11	VJR0646	TEST POINT	6	
TP315	VJR0646	TEST POINT	1	
TP701-08	VJR0646	TEST POINT	8	
TPG301-03	VJR0646	TEST POINT	3	
TPG701-03	VJR0646	TEST POINT	3	
VC301	ECV1ZW10X53T	TRIMMER 10P	1	
VC701	ECV1ZW20X53T	V.CAPACITOR 20P	1	
VL301,02	EIR7QF016B	COIL	2	
VL701	EIR7QF016B	COIL	1	
VL702	EIR7QF015B	COIL	1	

Ref.No.		Part No.	Part Name & Description	Pcs	Remarks
VR301		VRV0109B501	V.RESISTOR 500	1	
VR302		VRV0109B102	V.RESISTOR 1K	1	
VR303		VRV0109B501	V.RESISTOR 500	1	
VR304		VRV0109B102	V.RESISTOR 1K	1	
VR309		VRV0109B101	V.RESISTOR 100	1	
VR310		VRV0109B502	V.RESISTOR 5K	1	
VR311		VRV0109B501	V.RESISTOR 500	1	
VR312		VRV0064B104	V.RESISTOR 100K	1	
VR313,14		VRV0110B502	V.RESISTOR 5K	2	
VR317		VRV0109B501	V.RESISTOR 500	1	
VR318		VRV0109B203	V.RESISTOR 20K	1	
VR319,20		VRV0109B102	V.RESISTOR 1K	2	
VR321		VRV0109B203	V.RESISTOR 20K	1	
VR322		VRV0109B102	V.RESISTOR 1K	1	
VR323		VRV0109B203	V.RESISTOR 20K	1	
VR324		VRV0109B102	V.RESISTOR 1K	1	
VR325		VRV0109B202	V.RESISTOR 2K	1	
VR701,02		VRV0109B501	V.RESISTOR 500	2	
VR710,11		VRV0110B502	V.RESISTOR 5K	2	
VR714		VRV0109B501	V.RESISTOR 500	1	
VR715		VRV0109B203	V.RESISTOR 20K	1	
VR716,17		VRV0109B102	V.RESISTOR 1K	2	
VR718		VRV0109B203	V.RESISTOR 20K	1	
VR719		VRV0109B102	V.RESISTOR 1K	1	
VR720		VRV0109B203	V.RESISTOR 20K	1	
VR721		VRV0109B102	V.RESISTOR 1K	1	
VR722		VRV0109B202	V.RESISTOR 2K	1	
VR727		VRV0109B101	V.RESISTOR 100	1	
			MISCELLANEOUS		
		VML2143	CARD PULLER	1	
		VML2144	CARD PULLER	1	
		VMZ1547	BARRIER	1	
		VXA3966	P.C.B. SHIELD PLATE	1	
		XYNV3+K6FR	SCREW	5	

Ref.No.		Part No.	Part Name & Description	Pcs	Remarks
	■	VEP83098G	P.C.BOARD W/COMPONENT		FOR AU-62H
			W3 MOD & DEMOD		
			CAPACITORS		
C62		ECUM1E104ZFN	C.CAPACITOR CH 25V 0.1U	1	
C63		ECEA1CU101	E.CAPACITOR 16V 100U	1	
C64		ECUM1E104ZFN	C.CAPACITOR CH 25V 0.1U	1	
C65		ECSF1CE106	E.CAPACITOR 16V 10U	1	
C66		ECUM1E104ZFN	C.CAPACITOR CH 25V 0.1U	1	
C67		ECSF1CE106	E.CAPACITOR 16V 10U	1	
C68		ECUM1E104ZFN	C.CAPACITOR CH 25V 0.1U	1	
C69,70		ECSF1CE106	E.CAPACITOR 16V 10U	2	
C71		ECUM1E104ZFN	C.CAPACITOR CH 25V 0.1U	1	
C72		ECEA1CU101	E.CAPACITOR 16V 100U	1	
C301,02		ECUM1H103KBN	C.CAPACITOR CH 50V 0.01U	2	
C303		ECUM1H220JCN	C.CAPACITOR CH 50V 22P	1	
C304,05		ECUM1H103KBN	C.CAPACITOR CH 50V 0.01U	2	
C306		ECUM1H220JCN	C.CAPACITOR CH 50V 22P	1	
C307		ECEA1AU101	E.CAPACITOR 10V 100U	1	
C308,09		ECUM1H103KBN	C.CAPACITOR CH 50V 0.01U	2	
C310		ECEA1AU101	E.CAPACITOR 10V 100U	1	
C311		ECUM1H103KBN	C.CAPACITOR CH 50V 0.01U	1	
C316		ECUM1E104ZFN	C.CAPACITOR CH 25V 0.1U	1	
C322		ECUM1E104ZFN	C.CAPACITOR CH 25V 0.1U	1	
C325		ECUM1E104ZFN	C.CAPACITOR CH 25V 0.1U	1	
C342		ECUM1H103KBN	C.CAPACITOR CH 50V 0.01U	1	
C343		ECUM1H150JCN	C.CAPACITOR CH 50V 15P	1	
C344		ECUM1H101JCN	C.CAPACITOR CH 50V 100P	1	
C345		ECUM1H100DCN	C.CAPACITOR CH 50V 10P	1	
C346		ECUM1H103KBN	C.CAPACITOR CH 50V 0.01U	1	
C347,48		ECEA1AU101	E.CAPACITOR 10V 100U	2	
C349		ECUM1H103KBN	C.CAPACITOR CH 50V 0.01U	1	
C350		ECUM1H820JCN	C.CAPACITOR CH 50V 82P	1	
C351,52		ECUM1H103KBN	C.CAPACITOR CH 50V 0.01U	2	
C353		ECUM1H680JCN	C.CAPACITOR CH 50V 68P	1	
C354,55		ECUM1H103KBN	C.CAPACITOR CH 50V 0.01U	2	
C356		ECUM1E104ZFN	C.CAPACITOR CH 25V 0.1U	1	
C357		ECEA1HU2R2	E.CAPACITOR 50V 2.2U	1	
C358		ECEA1AU101	E.CAPACITOR 10V 100U	1	
C359		ECUM1H103KBN	C.CAPACITOR CH 50V 0.01U	1	
C360		ECUM1H270JCN	C.CAPACITOR CH 50V 27P	1	
C363		ECUM1E104ZFN	C.CAPACITOR CH 25V 0.1U	1	
C373		ECEA1AU101	E.CAPACITOR 10V 100U	1	
C374		ECUM1H103KBN	C.CAPACITOR CH 50V 0.01U	1	
C375		ECEA1AU101	E.CAPACITOR 10V 100U	1	
C376-78		ECUM1H103KBN	C.CAPACITOR CH 50V 0.01U	3	
C380		ECUM1E104ZFN	C.CAPACITOR CH 25V 0.1U	1	
C381		ECUM1H103KBN	C.CAPACITOR CH 50V 0.01U	1	
C382		ECUM1E104ZFN	C.CAPACITOR CH 25V 0.1U	1	
C383		ECEA1AU101	E.CAPACITOR 10V 100U	1	
C386		ECUM1H050DCN	C.CAPACITOR CH 50V 50P	1	
C387		ECUM1H100DCN	C.CAPACITOR CH 50V 10P	1	
C389		ECUM1H331JCN	C.CAPACITOR CH 50V 330P	1	
C391		ECUM1H470JCN	C.CAPACITOR CH 50V 47P	1	
C392		ECUM1H103KBN	C.CAPACITOR CH 50V 0.01U	1	
C393		ECEA1AU101	E.CAPACITOR 10V 100U	1	
C394		ECUM1H103KBN	C.CAPACITOR CH 50V 0.01U	1	
C395		ECUM1E104ZFN	C.CAPACITOR CH 25V 0.1U	1	
C396,97		ECUM1H103KBN	C.CAPACITOR CH 50V 0.01U	2	
C398		ECUM1H180JCN	C.CAPACITOR CH 50V 18P	1	
C399		ECUM1H103KBN	C.CAPACITOR CH 50V 0.01U	1	
C400		ECUM1E104ZFN	C.CAPACITOR CH 25V 0.1U	1	
C401-03		ECUM1H103KBN	C.CAPACITOR CH 50V 0.01U	3	
C404		ECEA1AU101	E.CAPACITOR 10V 100U	1	
C405-07		ECUM1E104ZFN	C.CAPACITOR CH 25V 0.1U	3	
C408,09		ECUM1H270JCN	C.CAPACITOR CH 50V 27P	2	
C410		ECEA1AU471	E.CAPACITOR 10V 470U	1	
C411		ECUM1E104ZFN	C.CAPACITOR CH 25V 0.1U	1	

Ref.No.		Part No.	Part Name & Description	Pcs	Remarks
C412		ECUM1H221JCN	C.CAPACITOR CH 50V 220P	1	
C413		ECEA1AU101	E.CAPACITOR 10V 100U	1	
C414		ECUM1H470JCN	C.CAPACITOR CH 50V 47P	1	
C415		ECUM1H180JCN	C.CAPACITOR CH 50V 18P	1	
C416		ECUM1H181JCN	C.CAPACITOR CH 50V 180P	1	
C417,18		ECUM1E104ZFN	C.CAPACITOR CH 25V 0.1U	2	
C419		ECUM1H331JCN	C.CAPACITOR CH 50V 330P	1	
C420		ECUM1H220JCN	C.CAPACITOR CH 50V 22P	1	
C421		ECUM1H680JCN	C.CAPACITOR CH 50V 68P	1	
C422		ECUM1H330JCN	C.CAPACITOR CH 50V 33P	1	
C423		ECEA1AU101	E.CAPACITOR 10V 100U	1	
C424		ECEA1CU100	E.CAPACITOR 16V 10U	1	
C425		ECUM1H221JCN	C.CAPACITOR CH 50V 220P	1	
C426		VCM0044	M.CAPACITOR 130P	1	
C427		VCM0023	M.CAPACITOR 379P	1	
C428		ECUM1H680JCN	C.CAPACITOR CH 50V 68P	1	
C429		ECUM1H390JCN	C.CAPACITOR CH 50V 39P	1	
C430		ECUM1H331JCN	C.CAPACITOR CH 50V 330P	1	
C431		ECUM1H270JCN	C.CAPACITOR CH 50V 27P	1	
C432		ECEA0JU221	E.CAPACITOR 6.3V 220U	1	
C433		ECUM1H470JCN	C.CAPACITOR CH 50V 47P	1	
C434		ECUM1H560JCN	C.CAPACITOR CH 50V 56P	1	
C435		ECUM1H020CCN	C.CAPACITOR CH 50V 2P	1	
C436,37		ECUM1E104ZFN	C.CAPACITOR CH 25V 0.1U	2	
C440		ECUM1H470JCN	C.CAPACITOR CH 50V 47P	1	
C441		ECUM1H103KBN	C.CAPACITOR CH 50V 0.01U	1	
C442,43		ECEA1CU221	E.CAPACITOR 16V 220U	2	
C444,45		ECUM1H103KBN	C.CAPACITOR CH 50V 0.01U	2	
C446,47		VCM0027	M.CAPACITOR	2	
C448		ECEA1AU101	E.CAPACITOR 10V 100U	1	
C453		ECUM1E104ZFN	C.CAPACITOR CH 25V 0.1U	1	
C467		ECUM1E104ZFN	C.CAPACITOR CH 25V 0.1U	1	
C468		ECUM1H103KBN	C.CAPACITOR CH 50V 0.01U	1	
C470		ECUM1H330JCN	C.CAPACITOR CH 50V 33P	1	
C471		ECUM1H060DCN	C.CAPACITOR CH 50V 6P	1	
C472		VCC0037F062	C.CAPACITOR 50V 62P	1	
C473		ECUM1H182JN	C.CAPACITOR CH 50V 1800P	1	
C474		ECUM1E104ZFN	C.CAPACITOR CH 25V 0.1U	1	
C475		ECUM1H103KBN	C.CAPACITOR CH 50V 0.01U	1	
C476		ECEA1AU101	E.CAPACITOR 10V 100U	1	
C477		ECUM1H050DCN	C.CAPACITOR CH 50V 50P	1	
C478		ECEA1AU101	E.CAPACITOR 10V 100U	1	
C701,02		ECUM1H103KBN	C.CAPACITOR CH 50V 0.01U	2	
C703		ECEA1AU101	E.CAPACITOR 10V 100U	1	
C704,05		ECUM1H103KBN	C.CAPACITOR CH 50V 0.01U	2	
C706		ECUM1H330JCN	C.CAPACITOR CH 50V 33P	1	
C714		ECUM1H103KBN	C.CAPACITOR CH 50V 0.01U	1	
C725		ECUM1H180JCN	C.CAPACITOR CH 50V 18P	1	
C726		ECUM1H103KBN	C.CAPACITOR CH 50V 0.01U	1	
C727		ECUM1E104ZFN	C.CAPACITOR CH 25V 0.1U	1	
C728		ECUM1H220JCN	C.CAPACITOR CH 50V 22P	1	
C729		ECUM1H121JCN	C.CAPACITOR CH 50V 120P	1	
C730,31		ECUM1H103KBN	C.CAPACITOR CH 50V 0.01U	2	
C732		ECUM1H101JCN	C.CAPACITOR CH 50V 100P	1	
C733		ECEA1AU101	E.CAPACITOR 10V 100U	1	
C734		ECUM1H331JCN	C.CAPACITOR CH 50V 330P	1	
C735		ECEA1AU101	E.CAPACITOR 10V 100U	1	
C736		ECUM1H103KBN	C.CAPACITOR CH 50V 0.01U	1	
C737		ECUM1H101JCN	C.CAPACITOR CH 50V 100P	1	
C738		ECUM1H103KBN	C.CAPACITOR CH 50V 0.01U	1	
C740-42		ECUM1H103KBN	C.CAPACITOR CH 50V 0.01U	3	
C744		ECUM1E104ZFN	C.CAPACITOR CH 25V 0.1U	1	
C745		ECUM1H103KBN	C.CAPACITOR CH 50V 0.01U	1	
C746		ECUM1E104ZFN	C.CAPACITOR CH 25V 0.1U	1	
C747		ECEA1AU101	E.CAPACITOR 10V 100U	1	
C750		ECUM1H331JCN	C.CAPACITOR CH 50V 330P	1	
C751		ECUM1H101JCN	C.CAPACITOR CH 50V 100P	1	
C752		ECUM1H152JN	C.CAPACITOR CH 50V 1500P	1	
C753		ECUM1H220JCN	C.CAPACITOR CH 50V 22P	1	
C754		ECUM1H101JCN	C.CAPACITOR CH 50V 100P	1	
C755		ECUM1H220JCN	C.CAPACITOR CH 50V 22P	1	
C756		ECUM1H680JCN	C.CAPACITOR CH 50V 68P	1	
C757		ECUM1H150JCN	C.CAPACITOR CH 50V 15P	1	
C758		ECUM1H050DCN	C.CAPACITOR CH 50V 50P	1	
C759		ECUM1E104ZFN	C.CAPACITOR CH 25V 0.1U	1	

Ref.No.	Part No.	Part Name & Description	Pcs	Remarks
C760	ECUM1H100DCN	C.CAPACITOR CH 50V 10P	1	
C762	ECUM1H221JCN	C.CAPACITOR CH 50V 220P	1	
C763	ECUM1H101JCN	C.CAPACITOR CH 50V 100P	1	
C764-66	ECUM1H103KBN	C.CAPACITOR CH 50V 0.01U	3	
C767	ECEA1AU101	E.CAPACITOR 10V 100U	1	
C768,69	ECUM1H103KBN	C.CAPACITOR CH 50V 0.01U	2	
C770	ECUM1H220JCN	C.CAPACITOR CH 50V 22P	1	
C771	ECUM1H471JCN	C.CAPACITOR CH 50V 470P	1	
C772	ECUM1E104ZFN	C.CAPACITOR CH 25V 0.1U	1	
C773-75	ECUM1H103KBN	C.CAPACITOR CH 50V 0.01U	3	
C776	ECUM1E104ZFN	C.CAPACITOR CH 25V 0.1U	1	
C777	ECEA1AU101	E.CAPACITOR 10V 100U	1	
C778,79	ECUM1E104ZFN	C.CAPACITOR CH 25V 0.1U	2	
C780,81	ECUM1H390JCN	C.CAPACITOR CH 50V 39P	2	
C782	ECEA1AU471	E.CAPACITOR 10V 470U	1	
C783	ECUM1E104ZFN	C.CAPACITOR CH 25V 0.1U	1	
C784	ECUM1H221JCN	C.CAPACITOR CH 50V 220P	1	
C785	ECEA1AU101	E.CAPACITOR 10V 100U	1	
C786	ECUM1H121JCN	C.CAPACITOR CH 50V 120P	1	
C787	ECUM1H100DCN	C.CAPACITOR CH 50V 10P	1	
C788	ECUM1H331JCN	C.CAPACITOR CH 50V 330P	1	
C789,90	ECUM1E104ZFN	C.CAPACITOR CH 25V 0.1U	2	
C791	ECUM1H331JCN	C.CAPACITOR CH 50V 330P	1	
C792	ECUM1H220JCN	C.CAPACITOR CH 50V 22P	1	
C793	ECUM1H680JCN	C.CAPACITOR CH 50V 68P	1	
C794	ECUM1H330JCN	C.CAPACITOR CH 50V 33P	1	
C796	ECEA1CU100	E.CAPACITOR 16V 10U	1	
C797	VCMD023	M.CAPACITOR 379P	1	
C799	ECEA0JU221	E.CAPACITOR 6.3V 220U	1	
C800	ECUM1H470JCN	C.CAPACITOR CH 50V 47P	1	
C801	ECUM1H020CCN	C.CAPACITOR CH 50V 2P	1	
C802	ECUM1H121JCN	C.CAPACITOR CH 50V 120P	1	
C803,04	ECUM1E104ZFN	C.CAPACITOR CH 25V 0.1U	2	
C805	ECUM1H470JCN	C.CAPACITOR CH 50V 47P	1	
C808	ECEA1CU221	E.CAPACITOR 16V 220U	1	
C810	ECEA1CU221	E.CAPACITOR 16V 220U	1	
C811,12	ECUM1H103KBN	C.CAPACITOR CH 50V 0.01U	2	
C813,14	VCMD027	M.CAPACITOR	2	
C815	ECEA1AU101	E.CAPACITOR 10V 100U	1	
C821	ECUM1E104ZFN	C.CAPACITOR CH 25V 0.1U	1	
C836	ECUM1H470JCN	C.CAPACITOR CH 50V 47P	1	
C837	ECUM1H060DCN	C.CAPACITOR CH 50V 6P	1	
C838,39	ECUM1H100DCN	C.CAPACITOR CH 50V 10P	2	
C840	VCC0037F062	C.CAPACITOR 50V 62P	1	
C843	ECEA1AU101	E.CAPACITOR 10V 100U	1	
C844	ECUM1H103KBN	C.CAPACITOR CH 50V 0.01U	1	
C845	ECUM1H050DCN	C.CAPACITOR CH 50V 50P	1	
C846	ECEA1AU101	E.CAPACITOR 10V 100U	1	
D301	MA151WK	DIODE	1	
D303,04	MA151K	DIODE	2	
D305-07	MA151WK	DIODE	3	
D308,09	MA151WA	DIODE	2	
D701	MA151WK	DIODE	1	
D702-04	MA151K	DIODE	3	
D705,06	MA151WK	DIODE	2	
DL301	VLD0190	DELAY	1	
DL701	VLD0199	DELAY	1	
FL302	VLF0658	FILTER	1	
FL303	VLF0712	FILTER	1	
FL701	VLF0652	FILTER	1	
IC10	AN79N09	IC	1	
IC11,12	AN79M05F	IC	2	
IC13	AN78M05F	IC	1	

Ref.No.	Part No.	Part Name & Description	Pcs	Remarks
IC14	AN78N05	IC	1	
IC15	AN78N09	IC	1	
IC301	AN6308S	IC	1	
IC306	NJM1496M	IC	1	
IC307	UPD4053BG	IC	1	
IC309	RC082BM	IC	1	
IC310	AN6308S	IC	1	
IC311-15	10116D	IC	5	
IC316	SN74LS123NS	IC	1	
IC317	MC74HC00AF	IC	1	
IC319	NE5539D	IC	1	
IC326	RC082BM	IC	1	
IC327	AN6308S	IC	1	
IC701	AN6308S	IC	1	
IC705	NJM1496M	IC	1	
IC706	UPD4053BG	IC	1	
IC707	AN6308S	IC	1	
IC708-12	10116D	IC	5	
IC716	NE5539D	IC	1	
IC723	AN6308S	IC	1	
L301	VLQEL05S101K	COIL 100UH	1	
L302,03	VLQEL05S100J	COIL 10UH	2	
L304	VLQEL05S101K	COIL 100UH	1	
L308	VLQEL05S3R3J	COIL 3.3UH	1	
L309,10	VLQEL05S101K	COIL 100UH	2	
L311	VLQEL05S330J	COIL 33UH	1	
L312	VLQEL05S2R7J	COIL 2.7UH	1	
L313	VLQEL05S101K	COIL 100UH	1	
L314	VLQEL05S8R2J	COIL 8.2UH	1	
L316-18	VLQEL05S101K	COIL 100UH	3	
L320,21	VLQEL05S2R2J	COIL 2.2UH	2	
L322	VLQEL05S180J	COIL 18UH	1	
L323	VLQEL05S101K	COIL 100UH	1	
L324	VLQEL05S1R0J	COIL 1UH	1	
L325-27	VLQEL05S101K	COIL 100UH	3	
L328	VLQEL05S6R8J	COIL 6.8UH	1	
L329	VLQEL05S101K	COIL 100UH	1	
L330	VLQEL05S3R3J	COIL 3.3UH	1	
L333	VLQEL05S101K	COIL 100UH	1	
L334	VLQEL05S6R8K	COIL 6.8UH	1	
L345	VLQEL05S1R0J	COIL 1UH	1	
L346	VLQEL05SR47K	COIL 0.47UH	1	
L347	VLQEL05S101K	COIL 100UH	1	
L701	VLQEL05S101K	COIL 100UH	1	
L702	VLQEL05S150J	COIL 15UH	1	
L709	VLQEL05S4R7J	COIL 4.7UH	1	
L710	VLQEL05S101K	COIL 100UH	1	
L711	VLQEL05S560J	COIL 56UH	1	
L712	VLQEL05S101K	COIL 100UH	1	
L713	VLQEL05S3R9J	COIL 3.9UH	1	
L715	VLQEL05S101K	COIL 100UH	1	
L716	VLQEL05S471J	COIL 470UH	1	
L717	VLQEL05S330J	COIL 33UH	1	
L718	VLQEL05S3R3J	COIL 3.3UH	1	
L719	VLQEL05S8R2J	COIL 8.2UH	1	
L720	VLQEL05S6R8J	COIL 6.8UH	1	
L721	VLQEL05S4R7J	COIL 4.7UH	1	
L722	VLQEL05S2R7J	COIL 2.7UH	1	
L723	VLQEL05S5R6J	COIL 5.6UH	1	
L724	VLQEL05S101K	COIL 100UH	1	
L725	VLQEL05S1R5J	COIL 1.5UH	1	
L726-28	VLQEL05S101K	COIL 100UH	3	
L729	VLQEL05S150J	COIL 15UH	1	
L731	VLQEL05S101K	COIL 100UH	1	
L732	VLQEL05S6R8K	COIL 6.8UH	1	
L743	VLQEL05S181J	COIL 180UH	1	
L746	VLQEL05S101K	COIL 100UH	1	
Q301-04	2SC2295-B	TRANSISTOR CHIP	4	(B,C)
Q313,14	2SC2295-B	TRANSISTOR CHIP	2	(B,C)

Ref.No.	Part No.	Part Name & Description	Pcs	Remarks
Q315	2SA1022-B	TRANSISTOR CHIP	1	(B,C)
Q316	2SC2295-B	TRANSISTOR CHIP	1	(B,C)
Q317,18	2SA1022-B	TRANSISTOR CHIP	2	(B,C)
Q319	IMX4	TRANSISTOR	1	
Q320	UN2113	TRANSISTOR-RESISTOR	1	
Q321	2SC2295-B	TRANSISTOR CHIP	1	(B,C)
Q323	IMX4	TRANSISTOR	1	
Q324	2SC2295-B	TRANSISTOR CHIP	1	(B,C)
Q326	2SC2295-B	TRANSISTOR CHIP	1	(B,C)
Q327	2SA1022-B	TRANSISTOR CHIP	1	(B,C)
Q329-38	2SC2295-B	TRANSISTOR CHIP	10	(B,C)
Q339,40	UN2213	TRANSISTOR-RESISTOR	2	
Q341	2SA1462	TRANSISTOR	1	
Q342,43	2SC3757	TRANSISTOR	2	(Q,R)
Q344	2SC2295-B	TRANSISTOR CHIP	1	(B,C)
Q345	2SA1022-B	TRANSISTOR CHIP	1	(B,C)
Q346	2SC2480	TRANSISTOR	1	
Q347	2SA1462	TRANSISTOR	1	
Q348	2SC2480	TRANSISTOR	1	
Q349	2SA1226	TRANSISTOR	1	
Q356-61	UN2113	TRANSISTOR-RESISTOR	6	
Q376	2SA1462	TRANSISTOR	1	
Q377	2SA1226	TRANSISTOR	1	
Q378	2SC3757	TRANSISTOR	1	(Q,R)
Q379	2SC2480	TRANSISTOR	1	
Q382-84	2SC3757	TRANSISTOR	3	(Q,R)
Q385,86	2SC2295-B	TRANSISTOR CHIP	2	(B,C)
Q387	2SA1022-B	TRANSISTOR CHIP	1	(B,C)
Q388	2SD601-R	TRANSISTOR CHIP	1	(Q,R)
Q389	2SB709-R	TRANSISTOR CHIP	1	(Q,R)
Q390	2SA1226	TRANSISTOR	1	
Q391,92	2SD601-R	TRANSISTOR CHIP	2	(Q,R)
Q393	2SB709-R	TRANSISTOR CHIP	1	(Q,R)
Q701,02	2SA1022-B	TRANSISTOR CHIP	2	(B,C)
Q710,11	2SC2295-B	TRANSISTOR CHIP	2	(B,C)
Q712	2SA1022-B	TRANSISTOR CHIP	1	(B,C)
Q713	2SC2295-B	TRANSISTOR CHIP	1	(B,C)
Q714,15	2SA1022-B	TRANSISTOR CHIP	2	(B,C)
Q716	2SC2295-B	TRANSISTOR CHIP	1	(B,C)
Q718	2SC2295-B	TRANSISTOR CHIP	1	(B,C)
Q719	2SA1022-B	TRANSISTOR CHIP	1	(B,C)
Q721-30	2SC2295-B	TRANSISTOR CHIP	10	(B,C)
Q731	UN2213	TRANSISTOR-RESISTOR	1	
Q732	2SA1462	TRANSISTOR	1	
Q733	2SC2295-B	TRANSISTOR CHIP	1	(B,C)
Q734	2SA1022-B	TRANSISTOR CHIP	1	(B,C)
Q735	2SC2480	TRANSISTOR	1	
Q736	2SA1462	TRANSISTOR	1	
Q737	2SC2480	TRANSISTOR	1	
Q738	2SA1226	TRANSISTOR	1	
Q754	2SA1462	TRANSISTOR	1	
Q755	2SA1226	TRANSISTOR	1	
Q756	2SC3757	TRANSISTOR	1	(Q,R)
Q757	2SC2480	TRANSISTOR	1	
Q758-60	2SC3757	TRANSISTOR	3	(Q,R)
Q761	2SC2295-B	TRANSISTOR CHIP	1	(B,C)
Q762	2SA1022-B	TRANSISTOR CHIP	1	(B,C)
Q763	2SD601-R	TRANSISTOR CHIP	1	(Q,R)
Q764	2SB709-R	TRANSISTOR CHIP	1	(Q,R)
Q765	2SA1226	TRANSISTOR	1	
Q766	2SD601-R	TRANSISTOR CHIP	1	(Q,R)
		RESISTORS		
R20	ERJ6GEYJ472	M.RESISTOR CH 1/10W 4.7K	1	
R101	ERJ6GEYJ470	M.RESISTOR CH 1/10W 47	1	
R301	ERJ6GEYJ470	M.RESISTOR CH 1/10W 47	1	
R302	ERJ6GEYJ681	M.RESISTOR CH 1/10W 680	1	
R303	ERJ6GEYJ102	M.RESISTOR CH 1/10W 1K	1	
R304	ERJ6GEYJ332	M.RESISTOR CH 1/10W 3.3K	1	
R305	ERJ6GEYJ470	M.RESISTOR CH 1/10W 47	1	
R306	ERJ6GEYJ681	M.RESISTOR CH 1/10W 680	1	
R307	ERJ6GEYJ102	M.RESISTOR CH 1/10W 1K	1	
R308	ERJ6GEYJ332	M.RESISTOR CH 1/10W 3.3K	1	

Ref.No.	Part No.	Part Name & Description	Pcs	Remarks
R309	ERJ6GEYJ222	M.RESISTOR CH 1/10W 2.2K	1	
R310	ERJ6GEYJ470	M.RESISTOR CH 1/10W 47	1	
R332	ERJ6GEYJ152	M.RESISTOR CH 1/10W 1.5K	1	
R333,34	ERJ6GEYG471	M.RESISTOR CH 1/10W 470	2	
R335,36	ERJ6GEYJ470	M.RESISTOR CH 1/10W 47	2	
R337,38	ERJ6GEYJ222	M.RESISTOR CH 1/10W 2.2K	2	
R339,40	VRE0034E43A	M.RESISTOR 1/10W	2	
R341	ERJ6GEYJ470	M.RESISTOR CH 1/10W 47	1	
R342	VRE0034E43A	M.RESISTOR 1/10W	1	
R343	VRE0034E89A	M.RESISTOR CH 1/10W 825	1	
R344	ERJ6GEYJ470	M.RESISTOR CH 1/10W 47	1	
R345	ERJ6GEYJ222	M.RESISTOR CH 1/10W 2.2K	1	
R346	ERJ6GEYJ102	M.RESISTOR CH 1/10W 1K	1	
R347	VRE0034E51A	M.RESISTOR CH 1/10W 357	1	
R348	ERJ6GEYJ153	M.RESISTOR CH 1/10W 15K	1	
R349	ERJ6GEYG223	M.RESISTOR CH 1/10W 22K	1	
R350,51	ERJ6GEYJ220	M.RESISTOR CH 1/10W 22	2	
R352	ERJ6GEYJ470	M.RESISTOR CH 1/10W 47	1	
R353	ERJ6GEYJ152	M.RESISTOR CH 1/10W 1.5K	1	
R354	ERJ6GEYG471	M.RESISTOR CH 1/10W 470	1	
R355	ERJ6GEYJ102	M.RESISTOR CH 1/10W 1K	1	
R356	ERJ6GEYJ221	M.RESISTOR CH 1/10W 220	1	
R357	ERJ6GEYJ222	M.RESISTOR CH 1/10W 2.2K	1	
R358	ERJ6GEYJ101	M.RESISTOR CH 1/10W 100	1	
R359	ERJ6GEYJ472	M.RESISTOR CH 1/10W 4.7K	1	
R360,61	ERJ6GEYJ473	M.RESISTOR CH 1/10W 47K	2	
R362	ERJ6GEYJ472	M.RESISTOR CH 1/10W 4.7K	1	
R363,64	ERJ6GEYG223	M.RESISTOR CH 1/10W 22K	2	
R365	ERJ6GEYJ473	M.RESISTOR CH 1/10W 47K	1	
R366	ERJ6GEYG223	M.RESISTOR CH 1/10W 22K	1	
R367	ERJ6GEYJ683	M.RESISTOR CH 1/10W 68K	1	
R368	ERJ6GEYJ472	M.RESISTOR CH 1/10W 4.7K	1	
R369	ERJ6GEYJ103	M.RESISTOR CH 1/10W 10K	1	
R370	ERJ6GEYJ683	M.RESISTOR CH 1/10W 68K	1	
R371	ERJ6GEYJ682	M.RESISTOR CH 1/10W 6.8K	1	
R372	ERJ6GEYJ470	M.RESISTOR CH 1/10W 47	1	
R373	ERJ6GEYJ681	M.RESISTOR CH 1/10W 680	1	
R374	ERJ6GEYG151	M.RESISTOR CH 1/10W 150	1	
R375	ERJ6GEYJ470	M.RESISTOR CH 1/10W 47	1	
R386	ERJ6GEYJ103	M.RESISTOR CH 1/10W 10K	1	
R387,88	ERJ6GEYJ473	M.RESISTOR CH 1/10W 47K	2	
R389	ERJ6GEYJ103	M.RESISTOR CH 1/10W 10K	1	
R390	ERJ6GEYJ472	M.RESISTOR CH 1/10W 4.7K	1	
R391	ERJ6GEYJ474	M.RESISTOR CH 1/10W 470K	1	
R392	ERJ6GEYJ473	M.RESISTOR CH 1/10W 47K	1	
R393,94	ERJ6GEYG471	M.RESISTOR CH 1/10W 470	2	
R395	ERJ6GEYJ101	M.RESISTOR CH 1/10W 100	1	
R396	ERJ6GEYJ222	M.RESISTOR CH 1/10W 2.2K	1	
R397	ERJ6GEYJ470	M.RESISTOR CH 1/10W 47	1	
R398	ERJ6GEYJ152	M.RESISTOR CH 1/10W 1.5K	1	
R399,00	ERJ6GEYG301	M.RESISTOR CH 1/10W 300	2	
R401	ERJ6GEYJ470	M.RESISTOR CH 1/10W 47	1	
R402	ERJ6GEYJ102	M.RESISTOR CH 1/10W 1K	1	
R403	ERJ6GEYJ681	M.RESISTOR CH 1/10W 680	1	
R404	ERJ6GEYJ102	M.RESISTOR CH 1/10W 1K	1	
R405	ERJ6GEYJ152	M.RESISTOR CH 1/10W 1.5K	1	
R406	ERJ6GEYJ470	M.RESISTOR CH 1/10W 47	1	
R407	ERJ6GEYJ221	M.RESISTOR CH 1/10W 220	1	
R408	ERJ6GEYJ222	M.RESISTOR CH 1/10W 2.2K	1	
R409	ERJ6GEYJ470	M.RESISTOR CH 1/10W 47	1	
R410	ERJ6GEYJ152	M.RESISTOR CH 1/10W 1.5K	1	
R411	ERJ6GEYJ331	M.RESISTOR CH 1/10W 330	1	
R412	VRE0034E51A	M.RESISTOR CH 1/10W 357	1	
R413	ERJ6GEYJ470	M.RESISTOR CH 1/10W 47	1	
R414	ERJ6GEYJ222	M.RESISTOR CH 1/10W 2.2K	1	
R415	ERJ6GEYJ470	M.RESISTOR CH 1/10W 47	1	
R426	ERJ6GEYJ470	M.RESISTOR CH 1/10W 47	1	
R427-34	ERJ6GEYJ102	M.RESISTOR CH 1/10W 1K	8	
R435,36	ERJ6GEYJ332	M.RESISTOR CH 1/10W 3.3K	2	
R437	ERJ6GEYJ101	M.RESISTOR CH 1/10W 100	1	
R438,39	ERJ6GEYG471	M.RESISTOR CH 1/10W 470	2	
R440	ERJ6GEYJ470	M.RESISTOR CH 1/10W 47	1	
R441,42	ERJ6GEYJ681	M.RESISTOR CH 1/10W 680	2	
R443,44	ERJ6GEYJ101	M.RESISTOR CH 1/10W 100	2	
R445	ERJ6GEYJ470	M.RESISTOR CH 1/10W 47	1	

Ref.No.	Part No.	Part Name & Description	Pcs	Remarks
R446	ERJ6GEYG151	M.RESISTOR CH 1/10W 150	1	
R447,48	ERJ6GEYJ222	M.RESISTOR CH 1/10W 2.2K	2	
R449	ERJ6GEYJ470	M.RESISTOR CH 1/10W 47	1	
R450,51	ERJ6GEYJ222	M.RESISTOR CH 1/10W 2.2K	2	
R452,53	ERJ6GEYJ470	M.RESISTOR CH 1/10W 47	2	
R454-65	ERJ6GEYJ102	M.RESISTOR CH 1/10W 1K	12	
R466	ERJ6GEYJ683	M.RESISTOR CH 1/10W 68K	1	
R467,68	ERJ6GEYJ103	M.RESISTOR CH 1/10W 10K	2	
R469,70	ERJ6GEYJ680	M.RESISTOR CH 1/10W 68	2	
R471,72	ERJ6GEYJ332	M.RESISTOR CH 1/10W 3.3K	2	
R473	ERJ6GEYJ101	M.RESISTOR CH 1/10W 100	1	
R474	ERDS2TJ222	C.RESISTOR 1/4W 2.2K	1	
R475	ERJ6GEYJ102	M.RESISTOR CH 1/10W 1K	1	
R477	ERJ6GEYG471	M.RESISTOR CH 1/10W 470	1	
R478	ERJ6GEYJ102	M.RESISTOR CH 1/10W 1K	1	
R479	ERJ6GEYJ222	M.RESISTOR CH 1/10W 2.2K	1	
R480,81	ERJ6GEYG471	M.RESISTOR CH 1/10W 470	2	
R482	ERJ6GEYJ470	M.RESISTOR CH 1/10W 47	1	
R483,84	ERJ6GEYJ333	M.RESISTOR CH 1/10W 33K	2	
R485,86	ERJ6GEYJ102	M.RESISTOR CH 1/10W 1K	2	
R487	ERJ6GEYJ222	M.RESISTOR CH 1/10W 2.2K	1	
R488	ERJ6GEYJ221	M.RESISTOR CH 1/10W 220	1	
R489	ERJ6GEYJ392	M.RESISTOR CH 1/10W 3.9K	1	
R490	ERJ6GEYJ470	M.RESISTOR CH 1/10W 47	1	
R491	ERJ6GEYG223	M.RESISTOR CH 1/10W 22K	1	
R492	ERJ6GEYG471	M.RESISTOR CH 1/10W 470	1	
R493	ERJ6GEYJ152	M.RESISTOR CH 1/10W 1.5K	1	
R494,95	ERJ6GEYJ101	M.RESISTOR CH 1/10W 100	2	
R496	ERJ6GEYJ222	M.RESISTOR CH 1/10W 2.2K	1	
R497	ERJ6GEYJ102	M.RESISTOR CH 1/10W 1K	1	
R498	ERJ6GEYJ101	M.RESISTOR CH 1/10W 100	1	
R499	ERJ6GEYJ332	M.RESISTOR CH 1/10W 3.3K	1	
R500	ERJ6GEYG223	M.RESISTOR CH 1/10W 22K	1	
R501	ERJ6GEYJ332	M.RESISTOR CH 1/10W 3.3K	1	
R502	ERJ6GEYJ472	M.RESISTOR CH 1/10W 4.7K	1	
R503	ERJ6GEYJ103	M.RESISTOR CH 1/10W 10K	1	
R504	ERJ6GEYJ184	M.RESISTOR CH 1/10W 180K	1	
R505,06	ERJ6GEYJ473	M.RESISTOR CH 1/10W 47K	2	
R508	ERJ6GEYG471	M.RESISTOR CH 1/10W 470	1	
R509	ERJ6GEYJ221	M.RESISTOR CH 1/10W 220	1	
R510	ERJ6GEYJ392	M.RESISTOR CH 1/10W 3.9K	1	
R511	VRE0034E27B	M.RESISTOR CH 1/10W 1.87K	1	
R512	VRE0034E751	M.RESISTOR CH 1/10W 750	1	
R513	ERJ6GEYJ332	M.RESISTOR CH 1/10W 3.3K	1	
R514	ERJ6GEYJ102	M.RESISTOR CH 1/10W 1K	1	
R515	ERJ6GEYJ682	M.RESISTOR CH 1/10W 6.8K	1	
R516	ERJ6GEYG301	M.RESISTOR CH 1/10W 300	1	
R518	ERJ6GEYG431	M.RESISTOR CH 1/10W 430	1	
R519	ERJ6GEYJ332	M.RESISTOR CH 1/10W 3.3K	1	
R520	ERJ6GEYJ101	M.RESISTOR CH 1/10W 100	1	
R521	ERJ6GEYG151	M.RESISTOR CH 1/10W 150	1	
R522	VRE0034E26A	M.RESISTOR CH 1/10W 182	1	
R523	VRE0034E51A	M.RESISTOR CH 1/10W 357	1	
R524	VRE0034E89A	M.RESISTOR CH 1/10W 825	1	
R525	ERJ6GEYG331	M.RESISTOR CH 1/10W 330	1	
R526,27	ERJ6GEYJ470	M.RESISTOR CH 1/10W 47	2	
R528	ERJ6GEYJ101	M.RESISTOR CH 1/10W 100	1	
R529	ERJ6GEYJ102	M.RESISTOR CH 1/10W 1K	1	
R530	ERJ6GEYJ681	M.RESISTOR CH 1/10W 680	1	
R531,32	ERJ6GEYJ273	M.RESISTOR CH 1/10W 27K	2	
R533,34	ERJ6GEYJ183	M.RESISTOR CH 1/10W 18K	2	
R535,36	ERJ6GEYJ221	M.RESISTOR CH 1/10W 220	2	
R537	ERJ6GEYG223	M.RESISTOR CH 1/10W 22K	1	
R538	ERJ6GEYJ470	M.RESISTOR CH 1/10W 47	1	
R539	ERJ6GEYG301	M.RESISTOR CH 1/10W 300	1	
R540	VRE0034E24A	M.RESISTOR 1/10W	1	
R541	VRE0034E89A	M.RESISTOR CH 1/10W 825	1	
R542	VRE0034E51A	M.RESISTOR CH 1/10W 357	1	
R543	VRE0034E89A	M.RESISTOR CH 1/10W 825	1	
R544	ERJ6GEYJ392	M.RESISTOR CH 1/10W 3.9K	1	
R545	ERJ6GEYJ222	M.RESISTOR CH 1/10W 2.2K	1	
R546	ERJ6GEYJ470	M.RESISTOR CH 1/10W 47	1	
R561-63	ERJ6GEYJ473	M.RESISTOR CH 1/10W 47K	3	
R564	ERJ6GEYJ222	M.RESISTOR CH 1/10W 2.2K	1	
R565	ERJ6GEYG223	M.RESISTOR CH 1/10W 22K	1	

Ref.No.	Part No.	Part Name & Description	Pcs	Remarks
R566	ERJ6GEYJ222	M.RESISTOR CH 1/10W 2.2K	1	
R567	ERJ6GEYG223	M.RESISTOR CH 1/10W 22K	1	
R620	ERJ6GEYJ101	M.RESISTOR CH 1/10W 100	1	
R624-26	ERJ6GEYJ103	M.RESISTOR CH 1/10W 10K	3	
R627	ERJ6GEYJ472	M.RESISTOR CH 1/10W 4.7K	1	
R628	ERJ6GEYG223	M.RESISTOR CH 1/10W 22K	1	
R629	ERJ6GEYJ472	M.RESISTOR CH 1/10W 4.7K	1	
R630,31	ERJ6GEYJ101	M.RESISTOR CH 1/10W 100	2	
R636	ERJ6GEYJ470	M.RESISTOR CH 1/10W 47	1	
R637	ERJ6GEYJ102	M.RESISTOR CH 1/10W 1K	1	
R639,40	ERJ6GEYJ331	M.RESISTOR CH 1/10W 330	2	
R644,45	ERJ6GEYJ470	M.RESISTOR CH 1/10W 47	2	
R646	ERJ6GEYJ682	M.RESISTOR CH 1/10W 6.8K	1	
R647,48	ERJ6GEYJ221	M.RESISTOR CH 1/10W 220	2	
R649	ERJ6GEYJ682	M.RESISTOR CH 1/10W 6.8K	1	
R650-53	ERJ6GEYJ101	M.RESISTOR CH 1/10W 100	4	
R656	ERJ6GEYJ470	M.RESISTOR CH 1/10W 47	1	
R660	VRE0034E51A	M.RESISTOR CH 1/10W 357	1	
R663	ERJ6GEYJ153	M.RESISTOR CH 1/10W 15K	1	
R664	ERJ6GEYK5R6	M.RESISTOR CH 1/10W 5.6	1	
R665	ERJ6GEYJ100	M.RESISTOR CH 1/10W 10	1	
R668	ERJ6GEYJ472	M.RESISTOR CH 1/10W 4.7K	1	
R669	ERJ6GEYJ102	M.RESISTOR CH 1/10W 1K	1	
R670	ERJ6GEYJ681	M.RESISTOR CH 1/10W 680	1	
R671	ERJ6GEYJ472	M.RESISTOR CH 1/10W 4.7K	1	
R672	ERJ6GEYJ103	M.RESISTOR CH 1/10W 10K	1	
R673	ERJ6GEYJ470	M.RESISTOR CH 1/10W 47	1	
R674	ERJ6GEYJ222	M.RESISTOR CH 1/10W 2.2K	1	
R675,76	ERJ6GEYJ472	M.RESISTOR CH 1/10W 4.7K	2	
R677	ERJ6GEYJ681	M.RESISTOR CH 1/10W 680	1	
R678	ERJ6GEYJ472	M.RESISTOR CH 1/10W 4.7K	1	
R679	ERJ6GEYJ103	M.RESISTOR CH 1/10W 10K	1	
R680	ERJ6GEYJ470	M.RESISTOR CH 1/10W 47	1	
R681	ERJ6GEYJ104	M.RESISTOR CH 1/10W 100K	1	
R682	ERJ6GEYJ333	M.RESISTOR CH 1/10W 33K	1	
R701	ERJ6GEYJ470	M.RESISTOR CH 1/10W 47	1	
R702	ERJ6GEYJ102	M.RESISTOR CH 1/10W 1K	1	
R703	VRE0034E89A	M.RESISTOR CH 1/10W 825	1	
R704	VRE0034E51A	M.RESISTOR CH 1/10W 357	1	
R705	ERJ6GEYJ681	M.RESISTOR CH 1/10W 680	1	
R711,12	ERJ6GEYJ470	M.RESISTOR CH 1/10W 47	2	
R723,24	ERJ6GEYJ101	M.RESISTOR CH 1/10W 100	2	
R725	ERJ6GEYJ102	M.RESISTOR CH 1/10W 1K	1	
R726	ERJ6GEYJ470	M.RESISTOR CH 1/10W 47	1	
R727	ERJ6GEYG471	M.RESISTOR CH 1/10W 470	1	
R728,29	ERJ6GEYJ470	M.RESISTOR CH 1/10W 47	2	
R730	ERJ6GEYG471	M.RESISTOR CH 1/10W 470	1	
R731	ERJ6GEYJ222	M.RESISTOR CH 1/10W 2.2K	1	
R732,33	ERJ6GEYG681	M.RESISTOR CH 1/10W 680	2	
R734	ERJ6GEYJ222	M.RESISTOR CH 1/10W 2.2K	1	
R735	ERJ6GEYJ470	M.RESISTOR CH 1/10W 47	1	
R736	VRE0034E43A	M.RESISTOR 1/10W	1	
R737	ERJ6GEYJ332	M.RESISTOR CH 1/10W 3.3K	1	
R738	VRE0034E89A	M.RESISTOR CH 1/10W 825	1	
R739	ERJ6GEYJ470	M.RESISTOR CH 1/10W 47	1	
R740	ERJ6GEYJ222	M.RESISTOR CH 1/10W 2.2K	1	
R741	ERJ6GEYJ182	M.RESISTOR CH 1/10W 1.8K	1	
R742	VRE0034E51A	M.RESISTOR CH 1/10W 357	1	
R743	ERJ6GEYJ153	M.RESISTOR CH 1/10W 15K	1	
R744	ERJ6GEYJ473	M.RESISTOR CH 1/10W 47K	1	
R745,46	ERJ6GEYJ220	M.RESISTOR CH 1/10W 22	2	
R747	ERJ6GEYJ470	M.RESISTOR CH 1/10W 47	1	
R748	ERJ6GEYJ152	M.RESISTOR CH 1/10W 1.5K	1	
R749	VRE0034E51A	M.RESISTOR CH 1/10W 357	1	
R750	ERJ6GEYJ102	M.RESISTOR CH 1/10W 1K	1	
R751	ERJ6GEYJ271	M.RESISTOR CH 1/10W 270	1	
R752	ERJ6GEYJ222	M.RESISTOR CH 1/10W 2.2K	1	
R753	ERJ6GEYJ472	M.RESISTOR CH 1/10W 4.7K	1	
R754	ERJ6GEYJ103	M.RESISTOR CH 1/10W 10K	1	
R755	ERJ6GEYJ472	M.RESISTOR CH 1/10W 4.7K	1	
R756	ERJ6GEYJ682	M.RESISTOR CH 1/10W 6.8K	1	
R757	ERJ6GEYG471	M.RESISTOR CH 1/10W 470	1	
R758	ERJ6GEYJ101	M.RESISTOR CH 1/10W 100	1	
R759	ERJ6GEYJ222	M.RESISTOR CH 1/10W 2.2K	1	
R760	ERJ6GEYJ470	M.RESISTOR CH 1/10W 47	1	

Ref.No.		Part No.	Part Name & Description	Pcs	Remarks
R761		ERJ6GEYJ152	M.RESISTOR CH 1/10W 1.5K	1	
R762,63		ERJ6GEYG391	M.RESISTOR CH 1/10W 390	2	
R764		ERJ6GEYJ470	M.RESISTOR CH 1/10W 47	1	
R765		ERJ6GEYJ102	M.RESISTOR CH 1/10W 1K	1	
R766		ERJ6GEYJ681	M.RESISTOR CH 1/10W 680	1	
R767		ERJ6GEYJ102	M.RESISTOR CH 1/10W 1K	1	
R768		ERJ6GEYJ152	M.RESISTOR CH 1/10W 1.5K	1	
R769		ERJ6GEYJ470	M.RESISTOR CH 1/10W 47	1	
R770		ERJ6GEYJ221	M.RESISTOR CH 1/10W 220	1	
R771		ERJ6GEYJ222	M.RESISTOR CH 1/10W 2.2K	1	
R772		ERJ6GEYJ470	M.RESISTOR CH 1/10W 47	1	
R773		ERJ6GEYJ152	M.RESISTOR CH 1/10W 1.5K	1	
R774		ERJ6GEYJ331	M.RESISTOR CH 1/10W 330	1	
R775		VRE0034E51A	M.RESISTOR CH 1/10W 357	1	
R776		ERJ6GEYJ470	M.RESISTOR CH 1/10W 47	1	
R777		ERJ6GEYJ222	M.RESISTOR CH 1/10W 2.2K	1	
R778		ERJ6GEYJ470	M.RESISTOR CH 1/10W 47	1	
R789		ERJ6GEYJ470	M.RESISTOR CH 1/10W 47	1	
R790-97		ERJ6GEYJ102	M.RESISTOR CH 1/10W 1K	8	
R798,99		ERJ6GEYJ332	M.RESISTOR CH 1/10W 3.3K	2	
R800		ERJ6GEYJ101	M.RESISTOR CH 1/10W 100	1	
R801,02		ERJ6GEYG471	M.RESISTOR CH 1/10W 470	2	
R803		ERJ6GEYJ470	M.RESISTOR CH 1/10W 47	1	
R804,05		ERJ6GEYJ681	M.RESISTOR CH 1/10W 680	2	
R806,07		ERJ6GEYJ101	M.RESISTOR CH 1/10W 100	2	
R808		ERJ6GEYJ470	M.RESISTOR CH 1/10W 47	1	
R809		ERJ6GEYG151	M.RESISTOR CH 1/10W 150	1	
R810,11		ERJ6GEYJ222	M.RESISTOR CH 1/10W 2.2K	2	
R812		ERJ6GEYJ470	M.RESISTOR CH 1/10W 47	1	
R813,14		ERJ6GEYJ222	M.RESISTOR CH 1/10W 2.2K	2	
R815,16		ERJ6GEYJ470	M.RESISTOR CH 1/10W 47	2	
R817-28		ERJ6GEYJ102	M.RESISTOR CH 1/10W 1K	12	
R829		ERJ6GEYJ683	M.RESISTOR CH 1/10W 68K	1	
R830,31		ERJ6GEYJ103	M.RESISTOR CH 1/10W 10K	2	
R832,33		ERJ6GEYJ150	M.RESISTOR CH 1/10W 15	2	
R834,35		ERJ6GEYJ332	M.RESISTOR CH 1/10W 3.3K	2	
R836		ERJ6GEYJ101	M.RESISTOR CH 1/10W 100	1	
R837		ERDS2TJ222	C.RESISTOR 1/4W 2.2K	1	
R838-40		ERJ6GEYJ102	M.RESISTOR CH 1/10W 1K	3	
R842		ERJ6GEYJ222	M.RESISTOR CH 1/10W 2.2K	1	
R843,44		ERJ6GEYG471	M.RESISTOR CH 1/10W 470	2	
R845		ERJ6GEYJ470	M.RESISTOR CH 1/10W 47	1	
R846,47		ERJ6GEYJ333	M.RESISTOR CH 1/10W 33K	2	
R848,49		ERJ6GEYJ102	M.RESISTOR CH 1/10W 1K	2	
R850		ERJ6GEYJ222	M.RESISTOR CH 1/10W 2.2K	1	
R851		ERJ6GEYJ221	M.RESISTOR CH 1/10W 220	1	
R852		ERJ6GEYJ392	M.RESISTOR CH 1/10W 3.9K	1	
R853		ERJ6GEYJ470	M.RESISTOR CH 1/10W 47	1	
R854		ERJ6GEYG471	M.RESISTOR CH 1/10W 470	1	
R855		ERJ6GEYJ152	M.RESISTOR CH 1/10W 1.5K	1	
R856,57		ERJ6GEYJ101	M.RESISTOR CH 1/10W 100	2	
R858		ERJ6GEYJ222	M.RESISTOR CH 1/10W 2.2K	1	
R859		ERJ6GEYJ102	M.RESISTOR CH 1/10W 1K	1	
R860		ERJ6GEYJ101	M.RESISTOR CH 1/10W 100	1	
R861		ERJ6GEYJ332	M.RESISTOR CH 1/10W 3.3K	1	
R862		ERJ6GEYG223	M.RESISTOR CH 1/10W 22K	1	
R863		ERJ6GEYJ332	M.RESISTOR CH 1/10W 3.3K	1	
R864		ERJ6GEYJ472	M.RESISTOR CH 1/10W 4.7K	1	
R865		ERJ6GEYJ103	M.RESISTOR CH 1/10W 10K	1	
R866		ERJ6GEYJ184	M.RESISTOR CH 1/10W 180K	1	
R867		ERJ6GEYJ473	M.RESISTOR CH 1/10W 47K	1	
R868		ERJ6GEYG471	M.RESISTOR CH 1/10W 470	1	
R870		ERJ6GEYG471	M.RESISTOR CH 1/10W 470	1	
R871		ERJ6GEYJ221	M.RESISTOR CH 1/10W 220	1	
R872		ERJ6GEYJ392	M.RESISTOR CH 1/10W 3.9K	1	
R873		VRE0034E27B	M.RESISTOR CH 1/10W 1.87K	1	
R874		VRE0034E751	M.RESISTOR CH 1/10W 750	1	
R875		ERJ6GEYJ332	M.RESISTOR CH 1/10W 3.3K	1	
R876		ERJ6GEYJ102	M.RESISTOR CH 1/10W 1K	1	
R878		ERJ6GEYG301	M.RESISTOR CH 1/10W 300	1	
R879		ERJ6GEYG431	M.RESISTOR CH 1/10W 430	1	
R880		ERJ6GEYJ332	M.RESISTOR CH 1/10W 3.3K	1	
R881		ERJ6GEYJ101	M.RESISTOR CH 1/10W 100	1	
R882		ERJ6GEYG151	M.RESISTOR CH 1/10W 150	1	
R883		VRE0034E26A	M.RESISTOR CH 1/10W 182	1	

Ref.No.		Part No.	Part Name & Description	Pcs	Remarks
R884		ERJ6GEYJ391	M.RESISTOR CH 1/10W 390	1	
R885		VRE0034E89A	M.RESISTOR CH 1/10W 825	1	
R886,87		ERJ6GEYJ470	M.RESISTOR CH 1/10W 47	2	
R888		VRE0034E51A	M.RESISTOR CH 1/10W 357	1	
R889		ERJ6GEYJ681	M.RESISTOR CH 1/10W 680	1	
R890		ERJ6GEYJ273	M.RESISTOR CH 1/10W 27K	1	
R891		ERJ6GEYJ183	M.RESISTOR CH 1/10W 18K	1	
R892		ERJ6GEYJ221	M.RESISTOR CH 1/10W 220	1	
R893		ERJ6GEYJ273	M.RESISTOR CH 1/10W 27K	1	
R894		ERJ6GEYJ183	M.RESISTOR CH 1/10W 18K	1	
R895		ERJ6GEYJ221	M.RESISTOR CH 1/10W 220	1	
R896		ERJ6GEYG223	M.RESISTOR CH 1/10W 22K	1	
R897		ERJ6GEYJ470	M.RESISTOR CH 1/10W 47	1	
R898		VRE0034E24A	M.RESISTOR 1/10W	1	
R899		VRE0034E89A	M.RESISTOR CH 1/10W 825	1	
R900		ERJ6GEYG301	M.RESISTOR CH 1/10W 300	1	
R901		VRE0034E51A	M.RESISTOR CH 1/10W 357	1	
R902		VRE0034E89A	M.RESISTOR CH 1/10W 825	1	
R903		ERJ6GEYJ392	M.RESISTOR CH 1/10W 3.9K	1	
R904		ERJ6GEYJ470	M.RESISTOR CH 1/10W 47	1	
R905		ERJ6GEYJ222	M.RESISTOR CH 1/10W 2.2K	1	
R964		ERJ6GEYJ101	M.RESISTOR CH 1/10W 100	1	
R965		ERJ6GEYJ102	M.RESISTOR CH 1/10W 1K	1	
R966-68		ERJ6GEYJ103	M.RESISTOR CH 1/10W 10K	3	
R969,70		ERJ6GEYJ472	M.RESISTOR CH 1/10W 4.7K	2	
R971		ERJ6GEYG223	M.RESISTOR CH 1/10W 22K	1	
R975,76		ERJ6GEYJ470	M.RESISTOR CH 1/10W 47	2	
R977		ERJ6GEYJ682	M.RESISTOR CH 1/10W 6.8K	1	
R978,79		ERJ6GEYJ221	M.RESISTOR CH 1/10W 220	2	
R980		ERJ6GEYJ682	M.RESISTOR CH 1/10W 6.8K	1	
R981,82		ERJ6GEYJ101	M.RESISTOR CH 1/10W 100	2	
R985		ERJ6GEYJ470	M.RESISTOR CH 1/10W 47	1	
R986,87		VRE0034E51A	M.RESISTOR CH 1/10W 357	2	
R989		ERJ6GEYJ472	M.RESISTOR CH 1/10W 4.7K	1	
R991		ERJ6GEY0R00	M.RESISTOR CH 1/10W 0	1	
R993		VRE0034E51A	M.RESISTOR CH 1/10W 357	1	
R996		ERJ6GEYJ220	M.RESISTOR CH 1/10W 22	1	
R1001		ERJ6GEYJ102	M.RESISTOR CH 1/10W 1K	1	
R1002		ERJ6GEYJ472	M.RESISTOR CH 1/10W 4.7K	1	
R1003		ERJ6GEYJ681	M.RESISTOR CH 1/10W 680	1	
R1004		ERJ6GEYJ472	M.RESISTOR CH 1/10W 4.7K	1	
R1005		ERJ6GEYJ103	M.RESISTOR CH 1/10W 10K	1	
R1006		ERJ6GEYJ470	M.RESISTOR CH 1/10W 47	1	
R1007		ERJ6GEYJ222	M.RESISTOR CH 1/10W 2.2K	1	
R1008,09		ERJ6GEYJ472	M.RESISTOR CH 1/10W 4.7K	2	
SW304		VSS0126	SWITCH	1	
SW704		VSS0126	SWITCH	1	
TP301,02		VJR0646	TEST POINT	2	
TP306-11		VJR0646	TEST POINT	6	
TP315		VJR0646	TEST POINT	1	
TP701-08		VJR0646	TEST POINT	8	
TPG301-03		VJR0646	TEST POINT	3	
TPG701-03		VJR0646	TEST POINT	3	
VC301		ECV1ZW10X53T	TRIMMER 10P	1	
VC701		ECV1ZW20X53T	V.CAPACITOR 20P	1	
VL301,02		EIR7QF016B	COIL	2	
VL701		EIR7QF016B	COIL	1	
VL702		EIR7QF015B	COIL	1	
VR301		VRV0109B501	V.RESISTOR 500	1	
VR302		VRV0109B102	V.RESISTOR 1K	1	

Ref.No.		Part No.	Part Name & Description	Pcs	Remarks
VR303		VRV0109B501	V.RESISTOR 500	1	
VR304		VRV0109B102	V.RESISTOR 1K	1	
VR309		VRV0109B101	V.RESISTOR 100	1	
VR310		VRV0109B502	V.RESISTOR 5K	1	
VR311		VRV0109B501	V.RESISTOR 500	1	
VR312		VRV0064B104	V.RESISTOR 100K	1	
VR315,16		VRV0110B502	V.RESISTOR 5K	2	
VR317		VRV0109B501	V.RESISTOR 500	1	
VR318		VRV0109B203	V.RESISTOR 20K	1	
VR319,20		VRV0109B102	V.RESISTOR 1K	2	
VR321		VRV0109B203	V.RESISTOR 20K	1	
VR322		VRV0109B102	V.RESISTOR 1K	1	
VR323		VRV0109B203	V.RESISTOR 20K	1	
VR324		VRV0109B102	V.RESISTOR 1K	1	
VR325		VRV0109B202	V.RESISTOR 2K	1	
VR701,02		VRV0109B501	V.RESISTOR 500	2	
VR712,13		VRV0110B502	V.RESISTOR 5K	2	
VR714		VRV0109B501	V.RESISTOR 500	1	
VR715		VRV0109B203	V.RESISTOR 20K	1	
VR716,17		VRV0109B102	V.RESISTOR 1K	2	
VR718		VRV0109B203	V.RESISTOR 20K	1	
VR719		VRV0109B102	V.RESISTOR 1K	1	
VR720		VRV0109B203	V.RESISTOR 20K	1	
VR721		VRV0109B102	V.RESISTOR 1K	1	
VR722		VRV0109B202	V.RESISTOR 2K	1	
VR727		VRV0109B101	V.RESISTOR 100	1	
			MISCELLANEOUS		
		VML2143	CARD PULLER	1	
		VML2144	CARD PULLER	1	
		VMZ1547	BARRIER	1	
		VXA3966	P.C.B. SHIELD PLATE	1	
		XYNV3+K6FR	SCREW	5	

Ref.No.		Part No.	Part Name & Description	Pcs	Remarks
	■	VEP83173A	P.C.BOARD W/COMPONENT		FOR AU-65H
			W4 DEC & CTCM		
			CAPACITORS		
C1-C3		ECEA0JN101S	E.CAPACITOR 6.3V 100U	3	
C4,C5		ECUM1H050DCN	C.CAPACITOR CH 50V 50P	2	
C6		ECEA1HN010S	E.CAPACITOR 50V 1U	1	
C7		ECUM1C104KBN	C.CAPACITOR CH 16V 0.1U	1	
C8		ECUM1E104ZFN	C.CAPACITOR CH 25V 0.1U	1	
C9		ECEA1CU101	E.CAPACITOR 16V 100U	1	
C10		ECEA1CU101	E.CAPACITOR 16V 100U	1	
C11		ECUM1E104ZFN	C.CAPACITOR CH 25V 0.1U	1	
C12		ECUM1H100DCN	C.CAPACITOR CH 50V 10P	1	
C13,14		ECUM1C104KBN	C.CAPACITOR CH 16V 0.1U	2	
C15		ECUM1H271JCN	C.CAPACITOR CH 50V 270P	1	
C16		ECUM1H470JCN	C.CAPACITOR CH 50V 47P	1	
C17,18		ECUM1H103KBN	C.CAPACITOR CH 50V 0.01U	2	
C19		ECEA1CU470	E.CAPACITOR 16V 47U	1	
C20,21		ECEA0JU330	E.CAPACITOR 6.3V 33U	2	
C22		ECUM1C104KBN	C.CAPACITOR CH 16V 0.1U	1	
C23		ECEA0JU330	E.CAPACITOR 6.3V 33U	1	
C24		ECUM1H103KBN	C.CAPACITOR CH 50V 0.01U	1	
C61		ECUM1H270JCN	C.CAPACITOR CH 50V 27P	1	
C62		ECUM1H103KBN	C.CAPACITOR CH 50V 0.01U	1	
C63		ECEA1CU470	E.CAPACITOR 16V 47U	1	
C64		ECUM1H103KBN	C.CAPACITOR CH 50V 0.01U	1	
C65		ECEA1CU470	E.CAPACITOR 16V 47U	1	
C66-68		ECUM1H103KBN	C.CAPACITOR CH 50V 0.01U	3	
C69		ECUM1H820JCN	C.CAPACITOR CH 50V 82P	1	
C70		ECUM1H103KBN	C.CAPACITOR CH 50V 0.01U	1	
C71		ECEA1CU470	E.CAPACITOR 16V 47U	1	
C72		ECUM1C104KBN	C.CAPACITOR CH 16V 0.1U	1	
C73		ECUM1H470JCN	C.CAPACITOR CH 50V 47P	1	
C75		ECUM1H331JCN	C.CAPACITOR CH 50V 330P	1	
C76,77		ECUM1C104KBN	C.CAPACITOR CH 16V 0.1U	2	
C78		ECEA1HN010S	E.CAPACITOR 50V 1U	1	
C101		ECUM1H101JCN	C.CAPACITOR CH 50V 100P	1	
C102		ECUM1H270JCN	C.CAPACITOR CH 50V 27P	1	
C103		ECUM1H101JCN	C.CAPACITOR CH 50V 100P	1	
C104		ECUM1H220JCN	C.CAPACITOR CH 50V 22P	1	
C111		ECEA1CU470	E.CAPACITOR 16V 47U	1	
C112		ECUM1H471JCN	C.CAPACITOR CH 50V 470P	1	
C113		ECUM1H101JCN	C.CAPACITOR CH 50V 100P	1	
C114		ECUM1H102JCN	C.CAPACITOR CH 50V 1000P	1	
C115,16		ECUM1H101JCN	C.CAPACITOR CH 50V 100P	2	
C120		ECUM1H101JCN	C.CAPACITOR CH 50V 100P	1	
C121		ECUM1H104KBM	C.CAPACITOR CH 50V 0.1U	1	
C122-28		ECUM1H103KBN	C.CAPACITOR CH 50V 0.01U	7	
C151-54		ECUM1H222KBN	C.CAPACITOR CH 50V 2200P	4	
C155		ECEA1AU330	E.CAPACITOR 10V 33U	1	
C156-65		ECUM1H222KBN	C.CAPACITOR CH 50V 2200P	10	
C166		ECEA1AU330	E.CAPACITOR 10V 33U	1	
C167		ECUM1H222KBN	C.CAPACITOR CH 50V 2200P	1	
C181		ECUM1C104KBN	C.CAPACITOR CH 16V 0.1U	1	
C182		ECUM1H103KBN	C.CAPACITOR CH 50V 0.01U	1	
C183		ECEA1CU100	E.CAPACITOR 16V 10U	1	
C184		ECUM1C104KBN	C.CAPACITOR CH 16V 0.1U	1	
C185		ECUM1H103KBN	C.CAPACITOR CH 50V 0.01U	1	
C186		ECEA1CU100	E.CAPACITOR 16V 10U	1	
C187		ECUM1C104KBN	C.CAPACITOR CH 16V 0.1U	1	
C188		ECUM1H103KBN	C.CAPACITOR CH 50V 0.01U	1	
C189		ECEA1CU100	E.CAPACITOR 16V 10U	1	
C190		ECUM1C104KBN	C.CAPACITOR CH 16V 0.1U	1	
C191		ECUM1H103KBN	C.CAPACITOR CH 50V 0.01U	1	
C192		ECEA1CU100	E.CAPACITOR 16V 10U	1	
C193		ECUM1H103KBN	C.CAPACITOR CH 50V 0.01U	1	
C194		ECEA1CU100	E.CAPACITOR 16V 10U	1	
C201		ECEA0JU101	E.CAPACITOR 6.3V 100U	1	

Ref.No.		Part No.	Part Name & Description	Pcs	Remarks
C202		ECUM1H103KBN	C.CAPACITOR CH 50V 0.01U	1	
C203		ECEA0JU101	E.CAPACITOR 6.3V 100U	1	
C204		ECUM1H103KBN	C.CAPACITOR CH 50V 0.01U	1	
C205		ECEA0JU101	E.CAPACITOR 6.3V 100U	1	
C206		ECUM1E104ZFN	C.CAPACITOR CH 25V 0.1U	1	
C207-09		ECUM1H103KBN	C.CAPACITOR CH 50V 0.01U	3	
C210		ECUM1H390JCN	C.CAPACITOR CH 50V 39P	1	
C211-28		ECUM1H103KBN	C.CAPACITOR CH 50V 0.01U	18	
C241		ECUM1H102JCN	C.CAPACITOR CH 50V 1000P	1	
C291,92		ECUM1H103KBN	C.CAPACITOR CH 50V 0.01U	2	
C321		ECUM1H103KBN	C.CAPACITOR CH 50V 0.01U	1	
C322		ECEA0JU330	E.CAPACITOR 6.3V 33U	1	
C323		ECEA0JU471	E.CAPACITOR 6.3V 470U	1	
C324		ECUM1H103KBN	C.CAPACITOR CH 50V 0.01U	1	
C325,26		ECUM1H104KBM	C.CAPACITOR CH 50V 0.1U	2	
C327		ECUM1H270JCN	C.CAPACITOR CH 50V 27P	1	
C328		ECEA0JU330	E.CAPACITOR 6.3V 33U	1	
C329		ECUM1E104ZFN	C.CAPACITOR CH 25V 0.1U	1	
C330		ECUM1H820JCN	C.CAPACITOR CH 50V 82P	1	
C331		ECUM1H103KBN	C.CAPACITOR CH 50V 0.01U	1	
C332,33		ECEA0JN101S	E.CAPACITOR 6.3V 100U	2	
C334		ECEA1CU221	E.CAPACITOR 16V 220U	1	
C335		ECUM1H103KBN	C.CAPACITOR CH 50V 0.01U	1	
C336		ECEA1CU221	E.CAPACITOR 16V 220U	1	
C337		ECUM1H390JCN	C.CAPACITOR CH 50V 39P	1	
C351		ECUM1H103KBN	C.CAPACITOR CH 50V 0.01U	1	
C352		ECEA0JU330	E.CAPACITOR 6.3V 33U	1	
C353		ECUM1H103KBN	C.CAPACITOR CH 50V 0.01U	1	
C354,55		ECUM1H104KBM	C.CAPACITOR CH 50V 0.1U	2	
C356		ECUM1H150JCN	C.CAPACITOR CH 50V 15P	1	
C357		ECUM1H040DCN	C.CAPACITOR CH 50V 4P	1	
C358		ECUM1H560JCN	C.CAPACITOR CH 50V 56P	1	
C359		ECUM1H080DCN	C.CAPACITOR CH 50V 80P	1	
C360		ECUM1H680JCN	C.CAPACITOR CH 50V 68P	1	
C361		ECEA0JN101S	E.CAPACITOR 6.3V 100U	1	
C362,63		ECUM1H103KBN	C.CAPACITOR CH 50V 0.01U	2	
C366		ECUM1H103KBN	C.CAPACITOR CH 50V 0.01U	1	
C367		ECEA0JU330	E.CAPACITOR 6.3V 33U	1	
C368		ECUM1H103KBN	C.CAPACITOR CH 50V 0.01U	1	
C369,70		ECUM1H104KBM	C.CAPACITOR CH 50V 0.1U	2	
C371		ECUM1H150JCN	C.CAPACITOR CH 50V 15P	1	
C372		ECUM1H040DCN	C.CAPACITOR CH 50V 4P	1	
C373		ECUM1H560JCN	C.CAPACITOR CH 50V 56P	1	
C374		ECUM1H080DCN	C.CAPACITOR CH 50V 80P	1	
C375		ECUM1H680JCN	C.CAPACITOR CH 50V 68P	1	
C376		ECEA0JN101S	E.CAPACITOR 6.3V 100U	1	
C377,78		ECUM1H103KBN	C.CAPACITOR CH 50V 0.01U	2	
C401		ECEA1CU470	E.CAPACITOR 16V 47U	1	
C402,03		ECUM1H103KBN	C.CAPACITOR CH 50V 0.01U	2	
C404		ECUM1H102JCN	C.CAPACITOR CH 50V 1000P	1	
C405		ECUM1H103KBN	C.CAPACITOR CH 50V 0.01U	1	
C406		ECUM1H331JCN	C.CAPACITOR CH 50V 330P	1	
C408		ECUM1H103KBN	C.CAPACITOR CH 50V 0.01U	1	
C409		ECUM1H121JCN	C.CAPACITOR CH 50V 120P	1	
C410		ECUM1H103KBN	C.CAPACITOR CH 50V 0.01U	1	
C415		ECUM1H101JCN	C.CAPACITOR CH 50V 100P	1	
C416,17		ECUM1H331JCN	C.CAPACITOR CH 50V 330P	2	
C421-25		ECUM1H103KBN	C.CAPACITOR CH 50V 0.01U	5	
C451		ECUM1H103KBN	C.CAPACITOR CH 50V 0.01U	1	
C452		ECEA0JU330	E.CAPACITOR 6.3V 33U	1	
C453		ECUM1H103KBN	C.CAPACITOR CH 50V 0.01U	1	
C454,55		ECUM1H104KBM	C.CAPACITOR CH 50V 0.1U	2	
C456		ECUM1H150JCN	C.CAPACITOR CH 50V 15P	1	
C457		ECUM1H040DCN	C.CAPACITOR CH 50V 4P	1	
C458		ECUM1H560JCN	C.CAPACITOR CH 50V 56P	1	
C459		ECEA1CU470	E.CAPACITOR 16V 47U	1	
C460		ECUM1H103KBN	C.CAPACITOR CH 50V 0.01U	1	
C461		ECEA1CU470	E.CAPACITOR 16V 47U	1	
C462		ECUM1H103KBN	C.CAPACITOR CH 50V 0.01U	1	
C463		ECEA1HU4R7	E.CAPACITOR 50V 4.7U	1	
C464-66		ECUM1H103KBN	C.CAPACITOR CH 50V 0.01U	3	
C467		ECEA1HNR47S	E.CAPACITOR 50V 0.47U	1	
C468		ECUM1C104KBN	C.CAPACITOR CH 16V 0.1U	1	
C469		ECUM1H103KBN	C.CAPACITOR CH 50V 0.01U	1	
C472		ECUM1H103KBN	C.CAPACITOR CH 50V 0.01U	1	

Ref.No.		Part No.	Part Name & Description	Pcs	Remarks
C501		ECUM1H103KBN	C.CAPACITOR CH 50V 0.01U	1	
C502		ECEA1CU470	E.CAPACITOR 16V 47U	1	
C503		ECUM1H103KBN	C.CAPACITOR CH 50V 0.01U	1	
C504		ECEA1CU470	E.CAPACITOR 16V 47U	1	
C505		ECUM1H330JCN	C.CAPACITOR CH 50V 33P	1	
C509		ECUM1C104KBN	C.CAPACITOR CH 16V 0.1U	1	
C510		ECEA1CU470	E.CAPACITOR 16V 47U	1	
C511		ECUM1C104KBN	C.CAPACITOR CH 16V 0.1U	1	
C513		ECUM1H103KBN	C.CAPACITOR CH 50V 0.01U	1	
C517		ECUM1H330JCN	C.CAPACITOR CH 50V 33P	1	
C520		ECUM1H103KBN	C.CAPACITOR CH 50V 0.01U	1	
C521		ECUM1C104KBN	C.CAPACITOR CH 16V 0.1U	1	
C522		ECEA1CU470	E.CAPACITOR 16V 47U	1	
C523		ECUM1C104KBN	C.CAPACITOR CH 16V 0.1U	1	
C524		ECUM1H103KBN	C.CAPACITOR CH 50V 0.01U	1	
C525		ECEA1CU470	E.CAPACITOR 16V 47U	1	
C526		ECUM1H470JCN	C.CAPACITOR CH 50V 47P	1	
C527		ECUM1H180JCN	C.CAPACITOR CH 50V 18P	1	
C528		ECUM1C104KBN	C.CAPACITOR CH 16V 0.1U	1	
C529		ECUM1H470JCN	C.CAPACITOR CH 50V 47P	1	
C531		ECUM1H103KBN	C.CAPACITOR CH 50V 0.01U	1	
C532		ECEA1CU470	E.CAPACITOR 16V 47U	1	
C533,34		ECUM1H270JCN	C.CAPACITOR CH 50V 27P	2	
C535		ECUM1H180JCN	C.CAPACITOR CH 50V 18P	1	
C536		ECUM1H470JCN	C.CAPACITOR CH 50V 47P	1	
C537		ECUM1C104KBN	C.CAPACITOR CH 16V 0.1U	1	
C538-40		ECUM1H103KBN	C.CAPACITOR CH 50V 0.01U	3	
C541		ECEA1CU470	E.CAPACITOR 16V 47U	1	
C542		ECUM1H103KBN	C.CAPACITOR CH 50V 0.01U	1	
C543		ECEA1CU470	E.CAPACITOR 16V 47U	1	
C544		ECUM1H080DCN	C.CAPACITOR CH 50V 80P	1	
C545		ECEA1CU470	E.CAPACITOR 16V 47U	1	
C547		ECUM1H470JCN	C.CAPACITOR CH 50V 47P	1	
C548,49		ECUM1C104KBN	C.CAPACITOR CH 16V 0.1U	2	
C550,51		ECUM1H103KBN	C.CAPACITOR CH 50V 0.01U	2	
C552		ECUM1H820JCN	C.CAPACITOR CH 50V 82P	1	
C553		ECUM1H390JCN	C.CAPACITOR CH 50V 39P	1	
C554		ECUM1H181JCN	C.CAPACITOR CH 50V 180P	1	
C555-57		ECUM1C104KBN	C.CAPACITOR CH 16V 0.1U	3	
C558		ECEA1HN010S	E.CAPACITOR 50V 1U	1	
C559-61		ECUM1H103KBN	C.CAPACITOR CH 50V 0.01U	3	
C562		ECEA1CU100	E.CAPACITOR 16V 10U	1	
C563		ECUM1E104ZFN	C.CAPACITOR CH 25V 0.1U	1	
C564		ECUM1H103KBN	C.CAPACITOR CH 50V 0.01U	1	
C565		ECEA1CU100	E.CAPACITOR 16V 10U	1	
C566		ECUM1E104ZFN	C.CAPACITOR CH 25V 0.1U	1	
C567		ECUM1H103KBN	C.CAPACITOR CH 50V 0.01U	1	
C568		ECEA1CU100	E.CAPACITOR 16V 10U	1	
C601-04		ECUM1H222KBN	C.CAPACITOR CH 50V 2200P	4	
C605		ECEA1AKG330	E.CAPACITOR 10V 33U	1	
C606,07		ECUM1H222KBN	C.CAPACITOR CH 50V 2200P	2	
C608		ECEA1AKG330	E.CAPACITOR 10V 33U	1	
C609-14		ECUM1H222KBN	C.CAPACITOR CH 50V 2200P	6	
C615		ECEA1AKG330	E.CAPACITOR 10V 33U	1	
C616		ECUM1H222KBN	C.CAPACITOR CH 50V 2200P	1	
C617		ECEA1AKG330	E.CAPACITOR 10V 33U	1	
C618-21		ECUM1H222KBN	C.CAPACITOR CH 50V 2200P	4	
C622		ECEA1AKG330	E.CAPACITOR 10V 33U	1	
C623,24		ECUM1H222KBN	C.CAPACITOR CH 50V 2200P	2	
C626-31		ECUM1H222KBN	C.CAPACITOR CH 50V 2200P	6	
C633		ECUM1H222KBN	C.CAPACITOR CH 50V 2200P	1	
C634		ECEA1AKG330	E.CAPACITOR 10V 33U	1	
C635-38		ECUM1E104ZFN	C.CAPACITOR CH 25V 0.1U	4	
C639		ECUM1H103KBN	C.CAPACITOR CH 50V 0.01U	1	
C640		ECEA0JU101	E.CAPACITOR 6.3V 100U	1	
C641,42		ECUM1E104ZFN	C.CAPACITOR CH 25V 0.1U	2	
C643		ECEA0JU330	E.CAPACITOR 6.3V 33U	1	
C645		ECUM1H103KBN	C.CAPACITOR CH 50V 0.01U	1	
C646		ECEA0JU330	E.CAPACITOR 6.3V 33U	1	
C647		ECUM1E104ZFN	C.CAPACITOR CH 25V 0.1U	1	
C648		ECEA1HU2R2	E.CAPACITOR 50V 2.2U	1	
C649		ECUM1H103KBN	C.CAPACITOR CH 50V 0.01U	1	
C650		ECEA1CKG470	E.CAPACITOR 16V 47U	1	
C651-53		ECUM1H103KBN	C.CAPACITOR CH 50V 0.01U	3	
C655		ECUM1E104ZFN	C.CAPACITOR CH 25V 0.1U	1	

Ref.No.		Part No.	Part Name & Description	Pcs	Remarks
C657		ECEA1CU221	E.CAPACITOR 16V 220U	1	
C658		ECUM1H050DCN	C.CAPACITOR CH 50V 50P	1	
C659		ECUM1H103KBN	C.CAPACITOR CH 50V 0.01U	1	
C660		ECEA1CU470	E.CAPACITOR 16V 47U	1	
C661		ECUM1H103KBN	C.CAPACITOR CH 50V 0.01U	1	
C662		ECEA1CU470	E.CAPACITOR 16V 47U	1	
C663		ECUM1H270JCN	C.CAPACITOR CH 50V 27P	1	
C664		ECUM1H221JCN	C.CAPACITOR CH 50V 220P	1	
C665		ECUM1H680JCN	C.CAPACITOR CH 50V 68P	1	
C666,67		ECEA1CU470	E.CAPACITOR 16V 47U	2	
C668		ECEA1CU101	E.CAPACITOR 16V 100U	1	
C679		ECUM1H470JCN	C.CAPACITOR CH 50V 47P	1	
C680-83		ECUM1H222KBN	C.CAPACITOR CH 50V 2200P	4	
C701		ECUM1H470JCN	C.CAPACITOR CH 50V 47P	1	
C702		ECUM1H103KBN	C.CAPACITOR CH 50V 0.01U	1	
C703		ECEA1CU470	E.CAPACITOR 16V 47U	1	
C704		ECUM1H331JCN	C.CAPACITOR CH 50V 330P	1	
C708		ECUM1H103KBN	C.CAPACITOR CH 50V 0.01U	1	
C709		ECEA1CU470	E.CAPACITOR 16V 47U	1	
C710		ECUM1H103KBN	C.CAPACITOR CH 50V 0.01U	1	
C711		ECUM1H102JCN	C.CAPACITOR CH 50V 1000P	1	
C712		ECUM1H820JCN	C.CAPACITOR CH 50V 82P	1	
C713,14		ECUM1H103KBN	C.CAPACITOR CH 50V 0.01U	2	
C715		ECEA1CU470	E.CAPACITOR 16V 47U	1	
C716		ECUM1H103KBN	C.CAPACITOR CH 50V 0.01U	1	
C717		ECUM1H331JCN	C.CAPACITOR CH 50V 330P	1	
C718-20		ECUM1H103KBN	C.CAPACITOR CH 50V 0.01U	3	
C721		ECQM1H122JF	P.CAPACITOR 50V 1200P	1	
C722-24		ECUM1H103KBN	C.CAPACITOR CH 50V 0.01U	3	
C725		ECEA1HN2R2S	E.CAPACITOR 50V 2.2U	1	
C726		ECEA1HNR47S	E.CAPACITOR 50V 0.47U	1	
C727		ECEA1HN010S	E.CAPACITOR 50V 1U	1	
C728		ECEA1HN2R2S	E.CAPACITOR 50V 2.2U	1	
C729		ECUM1H680JCN	C.CAPACITOR CH 50V 68P	1	
C730		ECUM1H103KBN	C.CAPACITOR CH 50V 0.01U	1	
C731		ECUM1H070DCN	C.CAPACITOR CH 50V 7P	1	
C732,33		ECUM1H103KBN	C.CAPACITOR CH 50V 0.01U	2	
C734		ECUM1H680JCN	C.CAPACITOR CH 50V 68P	1	
C735		ECUM1H471JCN	C.CAPACITOR CH 50V 470P	1	
C736		ECUM1H101JCN	C.CAPACITOR CH 50V 100P	1	
C737,38		ECEA1CU100	E.CAPACITOR 16V 10U	2	
C739		ECUM1H050DCN	C.CAPACITOR CH 50V 50P	1	
C740		ECUM1H103KBN	C.CAPACITOR CH 50V 0.01U	1	
C743,44		ECUM1H103KBN	C.CAPACITOR CH 50V 0.01U	2	
C745,46		ECUM1H102JCN	C.CAPACITOR CH 50V 1000P	2	
C749		ECUM1H103KBN	C.CAPACITOR CH 50V 0.01U	1	
C750		ECUM1H390JCN	C.CAPACITOR CH 50V 39P	1	
C751		ECEA0JU220	E.CAPACITOR 6.3V 22U	1	
C752		ECUM1H103KBN	C.CAPACITOR CH 50V 0.01U	1	
C761		ECUM1H220JCN	C.CAPACITOR CH 50V 22P	1	
C762		ECUM1H050DCN	C.CAPACITOR CH 50V 50P	1	
C763,64		ECUM1H560JCN	C.CAPACITOR CH 50V 56P	2	
C781		ECUM1H390JCN	C.CAPACITOR CH 50V 39P	1	
C791		ECUM1H102JCN	C.CAPACITOR CH 50V 1000P	1	
C800		VCK0036104KR	C.CAPACITOR 50V 0.1U	1	
C801		VCK0036104KR	C.CAPACITOR 50V 0.1U	1	
C802		ECCF1H820JC	C.CAPACITOR 50V 82P	1	
C803		ECCF1H560JC	C.CAPACITOR 50V 56P	1	
C804		ECCF1H560JC	C.CAPACITOR 50V 56P	1	
C805		VCK0036104KR	C.CAPACITOR 50V 0.1U	1	
C806		VCK0036104KR	C.CAPACITOR 50V 0.1U	1	
C807		ECCF1H820JC	C.CAPACITOR 50V 82P	1	
D1		1S251	DIODE	1	
D61		MA151WK	DIODE	1	
D111		MA151K	DIODE	1	
D112		MA151WA	DIODE	1	
D114		MA704	DIODE	1	
D201		MA151WK	DIODE	1	
D202		MA151WA	DIODE	1	
D203		MA151WK	DIODE	1	
D204		MA151WA	DIODE	1	
D205,06		MA151K	DIODE	2	

Ref.No.	Part No.	Part Name & Description	Pcs	Remarks
D259	MA704	DIODE	1	
D275	MA704	DIODE	1	
D501	MA151K	DIODE	1	
D502	MA151WK	DIODE	1	
D601,02	MA704	DIODE	2	
D603	1S250	DIODE	1	
D701	MA151K	DIODE	1	
D702	MA704	DIODE	1	
D703	MA151K	DIODE	1	
D704,05	MA153	DIODE	2	
D706,07	MA335-R	DIODE	2	
D708	MA151WA	DIODE	1	
D709	MA151WK	DIODE	1	
D710,11	MA151WA	DIODE	2	
D712	MA151K	DIODE	1	
FL1	VLF0712	FILTER	1	
FL151	VLF0576	FILTER	1	
FL201	VLF0691	FILTER	1	
FL202-04	VLF0576	FILTER	3	
FL401	VLF0576	FILTER	1	
FL451,52	VLF0576	FILTER	2	
FL501,02	VLF0753	FILTER	2	
FL601-04	VLF0576	FILTER	4	
FL605	VLF0754	FILTER	1	
IC1	VCR0133	IC	1	
IC2	UPD4053BG	IC	1	
IC3	TL082CPS	IC	1	
IC4	NJM3415M	IC	1	
IC5	HA19211BNT	IC	1	
IC6	UPD4053BG	IC	1	
IC7	MC74HC163F	IC	1	
IC8,C9	MC14053BF	IC	2	(R)
IC10	AN91A12S	IC	1	
IC11,12	SN74LS221NS	IC	2	
IC14	SN74LS221NS	IC	1	
IC15	SN74LS123NS	IC	1	
IC17	MC74HC74AF	IC	1	
IC18	MC74HC00AF	IC	1	
IC19-24	MN74HC161S	IC	6	
IC25	MC74HC32AF	IC	1	
IC26	TL082CPS	IC	1	
IC27	NJM311M	IC	1	
IC51	AN78N09	IC	1	
IC52	AN78N05	IC	1	
IC53	AN79N09	IC	1	
IC54	AN79N05	IC	1	
IC201	MC74HC574AF	IC	1	
IC202	UPD42505C-50	IC	1	
IC203	MC74HC04AF	IC	1	
IC204	MC74HC00AF	IC	1	
IC205	UPD65022F046	IC	1	
IC206-08	MC74HC157AF	IC	3	
IC209	UPD42505C-50	IC	1	
IC210	UPD65042F024	IC	1	
IC211	UPD42505C-50	IC	1	
IC212,13	MC74HC173F	IC	2	
IC215	MB40778PF	IC	1	
IC216,17	MC74HC574AF	IC	2	
IC219	MC74HC74AF	IC	1	
IC220	MB40778PF	IC	1	
IC221	MC74HC366F	IC	1	
IC222	MC74HC04AF	IC	1	
IC225	MB40778PF	IC	1	
IC227-29	TL082CPS	IC	3	
IC230	MB40778PF	IC	1	
IC233,34	UPD4053BG	IC	2	
IC235	UPD4052BG	IC	1	
IC236,37	UPD4053BG	IC	2	
IC238	MC74HC74AF	IC	1	

Ref.No.	Part No.	Part Name & Description	Pcs	Remarks
IC401	MM74HC221AM	IC	1	
IC402	SN74LS221NS	IC	1	
IC403	UPD65013BC16	IC	1	
IC405,06	MC74HC74AF	IC	2	
IC407	MC74HC00AF	IC	1	
IC408	MC74HC175F	IC	1	
IC409	MC74HC04AF	IC	1	
IC501	TL082CPS	IC	1	
IC503,04	MC74HC4053F	IC	2	
IC505	AN91A12S	IC	1	
IC506	AN78N09	IC	1	
IC507	AN78N05	IC	1	
IC510	UPD4053BG	IC	1	
IC601,02	HA19211BNT	IC	2	
IC603,04	UPD42101G-3	IC	2	
IC605	MC74HC574AF	IC	1	
IC606	MB40778PF	IC	1	
IC607	NJM3415M	IC	1	
IC609	AN78L05	IC	1	
IC610	NJM2233BMA	IC	1	
IC703	SN74LS221NS	IC	1	
IC704	MC74HC157AF	IC	1	
IC705	MC74HC74AF	IC	1	
IC706	TL082CPS	IC	1	
IC707	MC74HC4053F	IC	1	
IC708	TL084CNS	IC	1	
IC709	MC74HC00AF	IC	1	
IC710	SN74LS221NS	IC	1	
IC711	MC74HC04AF	IC	1	
IC712	MC74HC14AF	IC	1	
IC713	UPD65013FC25	IC	1	
IC714	MC74HC163F	IC	1	
IC781	MC74HC374AF	IC	1	
IC783	MC74HC157AF	IC	1	
IC791	MM74HC221AM	IC	1	
IC792	MC74HC32AF	IC	1	
L1,L2	VLQEL05S101K	COIL 100UH	2	
L3	VLQEL05S821J	COIL 820UH	1	
L4	VLQEL05S1R5J	COIL 1.5UH	1	
L61	VLQEL05S330J	COIL 33UH	1	
L62,63	VLQEL05S101K	COIL 100UH	2	
L64	VLQEL05S821J	COIL 820UH	1	
L101,02	VLQEL05S3R3J	COIL 3.3UH	2	
L151	VLP0017	COIL	1	
L321	VLQEL05S330J	COIL 33UH	1	
L322	VLQEL05S390J	COIL 39UH	1	
L323,24	VLQEL05S101K	COIL 100UH	2	
L325	VLP0017	COIL	1	
L351	VLQEL05S560J	COIL 56UH	1	
L352	VLP0017	COIL	1	
L366	VLQEL05S560J	COIL 56UH	1	
L367	VLP0017	COIL	1	
L451	VLQEL05S560J	COIL 56UH	1	
L452	VLP0017	COIL	1	
L501,02	VLQEL05S101K	COIL 100UH	2	
L505	VLQEL05S101K	COIL 100UH	1	
L506	VLQEL05S470J	COIL 47UH	1	
L507	VLQEL05S101K	COIL 100UH	1	
L508	VLQEL05S470J	COIL 47UH	1	
L509,10	VLQEL05S101K	COIL 100UH	2	
L513	VLQEL05S471J	COIL 470UH	1	
L601-03	VLP0017	COIL	3	
L604	VLQEL05S221K		1	
L606,07	VLQEL05S101K	COIL 100UH	2	
L608	VLQEL05S820J	COIL 82UH	1	
L701	VLQEL05S101K	COIL 100UH	1	
L703,04	VLQEL05S101K	COIL 100UH	2	
L705	VLQEL05S3R3J	COIL 3.3UH	1	
L706	VLQEL05S1R5J	COIL 1.5UH	1	
L707	VLQEL05S560J	COIL 56UH	1	

Ref.No.	Part No.	Part Name & Description	Pcs	Remarks
P1,P2	VJP1233T	CONNECTOR(MALE) 6P	2	
Q1	2SB709-R	TRANSISTOR CHIP	1	(Q,R)
Q2	2SA1022-B	TRANSISTOR CHIP	1	(B,C)
Q3	2SB709-R	TRANSISTOR CHIP	1	(Q,R)
Q4	2SD601-R	TRANSISTOR CHIP	1	(Q,R)
Q5	2SB709-R	TRANSISTOR CHIP	1	(Q,R)
Q6	2SD601-R	TRANSISTOR CHIP	1	(Q,R)
Q7-Q9	2SC2295-B	TRANSISTOR CHIP	3	(B,C)
Q10	2SK374-R	TRANSISTOR	1	(Q,R)
Q11	UN221L	TRANSISTOR	1	
Q61	2SD601-R	TRANSISTOR CHIP	1	(Q,R)
Q101	2SB709-R	TRANSISTOR CHIP	1	(Q,R)
Q111	UN2212	TRANSISTOR-RESISTOR	1	
Q283-85	2SD601-R	TRANSISTOR CHIP	3	(Q,R)
Q321	2SA1022-B	TRANSISTOR CHIP	1	(B,C)
Q322	2SB709-R	TRANSISTOR CHIP	1	(Q,R)
Q323-25	2SC2295-B	TRANSISTOR CHIP	3	(B,C)
Q326	2SB709-R	TRANSISTOR CHIP	1	(Q,R)
Q327	2SD601-R	TRANSISTOR CHIP	1	(Q,R)
Q328	2SB709-R	TRANSISTOR CHIP	1	(Q,R)
Q329,30	2SC2295-B	TRANSISTOR CHIP	2	(B,C)
Q351-53	2SA1022-B	TRANSISTOR CHIP	3	(B,C)
Q354,55	2SB709-R	TRANSISTOR CHIP	2	(Q,R)
Q366-68	2SA1022-B	TRANSISTOR CHIP	3	(B,C)
Q369,70	2SB709-R	TRANSISTOR CHIP	2	(Q,R)
Q401,02	UN2212	TRANSISTOR-RESISTOR	2	
Q450	2SD601-R	TRANSISTOR CHIP	1	(Q,R)
Q451	2SC2404-C	TRANSISTOR CHIP	1	(C,D)
Q452	2SD601-R	TRANSISTOR CHIP	1	(Q,R)
Q501,02	2SD601-R	TRANSISTOR CHIP	2	(Q,R)
Q503,04	2SC2295-B	TRANSISTOR CHIP	2	(B,C)
Q506	2SC2295-B	TRANSISTOR CHIP	1	(B,C)
Q507	2SK374-R	TRANSISTOR	1	(Q,R)
Q509,10	2SD601-R	TRANSISTOR CHIP	2	(Q,R)
Q511,12	2SC2295-B	TRANSISTOR CHIP	2	(B,C)
Q514	2SC2295-B	TRANSISTOR CHIP	1	(B,C)
Q515	2SK374-R	TRANSISTOR	1	(Q,R)
Q517	2SB709-R	TRANSISTOR CHIP	1	(Q,R)
Q518,19	2SD601-R	TRANSISTOR CHIP	2	(Q,R)
Q520	2SB709-R	TRANSISTOR CHIP	1	(Q,R)
Q521	2SD601-R	TRANSISTOR CHIP	1	(Q,R)
Q522	2SB709-R	TRANSISTOR CHIP	1	(Q,R)
Q523	2SD601-R	TRANSISTOR CHIP	1	(Q,R)
Q525	2SA1022-B	TRANSISTOR CHIP	1	(B,C)
Q526,27	2SB709-R	TRANSISTOR CHIP	2	(Q,R)
Q528	2SD601-R	TRANSISTOR CHIP	1	(Q,R)
Q601	2SD601-R	TRANSISTOR CHIP	1	(Q,R)
Q602	2SA1022-B	TRANSISTOR CHIP	1	(B,C)
Q603	2SB709-R	TRANSISTOR CHIP	1	(Q,R)
Q604-06	2SC2295-B	TRANSISTOR CHIP	3	(B,C)
Q609	2SB709-R	TRANSISTOR CHIP	1	(Q,R)
Q701	2SD601-R	TRANSISTOR CHIP	1	(Q,R)
Q702	2SC2404-C	TRANSISTOR CHIP	1	(C,D)
Q703	2SD601-R	TRANSISTOR CHIP	1	(Q,R)
Q704	UN2112	TRANSISTOR-RESISTOR	1	
Q706	2SD601-R	TRANSISTOR CHIP	1	(Q,R)
Q707	2SC3757	TRANSISTOR	1	(Q,R)
Q708,09	2SA1226	TRANSISTOR	2	
Q710	2SC3757	TRANSISTOR	1	(Q,R)
Q711	2SB709-R	TRANSISTOR CHIP	1	(Q,R)
Q791	2SC3757	TRANSISTOR	1	(Q,R)
		RESISTORS		
R1	ERJ6GEYJ102	M.RESISTOR CH 1/10W 1K	1	
R2	ERJ6GEYJ101	M.RESISTOR CH 1/10W 100	1	
R3	ERJ6GEYJ103	M.RESISTOR CH 1/10W 10K	1	
R4	ERJ6GEYJ101	M.RESISTOR CH 1/10W 100	1	
R5	ERJ6GEYJ472	M.RESISTOR CH 1/10W 4.7K	1	
R6	ERJ6GEYJ222	M.RESISTOR CH 1/10W 2.2K	1	

Ref.No.	Part No.	Part Name & Description	Pcs	Remarks
R7,R8	ERJ6GEYG122	M.RESISTOR CH 1/10W 1.2K	2	
R9	ERJ6GEYJ152	M.RESISTOR CH 1/10W 1.5K	1	
R10,11	ERJ6GEYJ472	M.RESISTOR CH 1/10W 4.7K	2	
R12	ERJ6GEYJ101	M.RESISTOR CH 1/10W 100	1	
R13	ERJ6GEYJ472	M.RESISTOR CH 1/10W 4.7K	1	
R14	ERJ6GEYJ102	M.RESISTOR CH 1/10W 1K	1	
R15	ERJ6GEYJ470	M.RESISTOR CH 1/10W 47	1	
R16	ERJ6GEYJ222	M.RESISTOR CH 1/10W 2.2K	1	
R17,18	ERJ6GEYG331	M.RESISTOR CH 1/10W 330	2	
R19,20	ERJ6GEYJ470	M.RESISTOR CH 1/10W 47	2	
R21	ERJ6GEYJ472	M.RESISTOR CH 1/10W 4.7K	1	
R22	ERJ6GEYJ272	M.RESISTOR CH 1/10W 2.7K	1	
R23	ERJ6GEYJ154	M.RESISTOR CH 1/10W 150K	1	
R24,25	ERJ6GEYJ222	M.RESISTOR CH 1/10W 2.2K	2	
R26	ERJ6GEYJ561	M.RESISTOR CH 1/10W 560	1	
R27	ERJ6GEYJ682	M.RESISTOR CH 1/10W 6.8K	1	
R28	ERJ6GEYJ332	M.RESISTOR CH 1/10W 3.3K	1	
R29	ERJ6GEYJ473	M.RESISTOR CH 1/10W 47K	1	
R30	ERJ6GEYJ103	M.RESISTOR CH 1/10W 10K	1	
R31	ERJ6GEYJ222	M.RESISTOR CH 1/10W 2.2K	1	
R32	VRE0034E272	M.RESISTOR CH 1/10W 2.7K	1	
R33	VRE0034E202	M.RESISTOR CH 1/10W 2K	1	
R34	VRE0034E152	M.RESISTOR CH 1/10W 1.5K	1	
R35,36	VRE0034E102	M.RESISTOR CH 1/10W 1K	2	
R37	VRE0034E202	M.RESISTOR CH 1/10W 2K	1	
R38	ERJ6GEYJ103	M.RESISTOR CH 1/10W 10K	1	
R39	ERJ6GEYJ105	M.RESISTOR CH 1/10W 1M	1	
R40	ERJ6GEYJ271	M.RESISTOR CH 1/10W 270	1	
R41	ERJ6GEYJ6R8	M.RESISTOR CH 1/10W 6.8	1	
R42	ERJ6GEYJ471	M.RESISTOR CH 1/10W 470	1	
R51	ERJ6GEYG223	M.RESISTOR CH 1/10W 22K	1	
R61	ERJ6GEYJ102	M.RESISTOR CH 1/10W 1K	1	
R62	ERJ6GEYJ822	M.RESISTOR CH 1/10W 8.2K	1	
R63	ERJ6GEYJ683	M.RESISTOR CH 1/10W 68K	1	
R64	ERJ6GEYJ470	M.RESISTOR CH 1/10W 47	1	
R65	ERJ6GEYJ472	M.RESISTOR CH 1/10W 4.7K	1	
R66	ERJ6GEYJ102	M.RESISTOR CH 1/10W 1K	1	
R67	ERJ6GEYJ224	M.RESISTOR CH 1/10W 220K	1	
R68	ERJ6GEYJ684	M.RESISTOR CH 1/10W 680K	1	
R69-71	ERJ6GEYJ103	M.RESISTOR CH 1/10W 10K	3	
R72	ERJ6GEYJ222	M.RESISTOR CH 1/10W 2.2K	1	
R73	ERJ6GEYG221	M.RESISTOR CH 1/10W 220	1	
R74	ERJ6GEYJ102	M.RESISTOR CH 1/10W 1K	1	
R75	ERJ6GEYJ222	M.RESISTOR CH 1/10W 2.2K	1	
R76	ERJ6GEYJ103	M.RESISTOR CH 1/10W 10K	1	
R101	ERJ6GEYJ472	M.RESISTOR CH 1/10W 4.7K	1	
R102	ERJ6GEYJ470	M.RESISTOR CH 1/10W 47	1	
R103	ERJ6GEYJ102	M.RESISTOR CH 1/10W 1K	1	
R104	ERJ6GEYJ272	M.RESISTOR CH 1/10W 2.7K	1	
R105	ERJ6GEY0R00	M.RESISTOR CH 1/10W 0	1	
R106	ERJ6GEYJ182	M.RESISTOR CH 1/10W 1.8K	1	
R107	ERJ6GEYJ103	M.RESISTOR CH 1/10W 10K	1	
R108	ERJ6GEYJ562	M.RESISTOR CH 1/10W 5.6K	1	
R111	ERJ6GEYJ272	M.RESISTOR CH 1/10W 2.7K	1	
R112	ERJ6GEYJ153	M.RESISTOR CH 1/10W 15K	1	
R113	ERJ6GEYJ562	M.RESISTOR CH 1/10W 5.6K	1	
R114	ERJ6GEYJ682	M.RESISTOR CH 1/10W 6.8K	1	
R115	ERJ6GEYG223	M.RESISTOR CH 1/10W 22K	1	
R116	ERJ6GEYJ562	M.RESISTOR CH 1/10W 5.6K	1	
R117	ERJ6GEYJ682	M.RESISTOR CH 1/10W 6.8K	1	
R121	ERJ6GEY0R00	M.RESISTOR CH 1/10W 0	1	
R122	ERJ6GEYJ103	M.RESISTOR CH 1/10W 10K	1	
R123	ERJ6GEYJ562	M.RESISTOR CH 1/10W 5.6K	1	
R126	ERJ6GEYJ102	M.RESISTOR CH 1/10W 1K	1	
R127	ERJ6GEYJ683	M.RESISTOR CH 1/10W 68K	1	
R128	ERJ6GEYJ562	M.RESISTOR CH 1/10W 5.6K	1	
R129	ERJ6GEYJ393	M.RESISTOR CH 1/10W 39K	1	
R130	ERJ6GEYJ562	M.RESISTOR CH 1/10W 5.6K	1	
R131	ERJ6GEY0R00	M.RESISTOR CH 1/10W 0	1	
R133	ERJ6GEYJ152	M.RESISTOR CH 1/10W 1.5K	1	
R145-49	ERJ6GEY0R00	M.RESISTOR CH 1/10W 0	5	
R151	ERJ6GEYJ152	M.RESISTOR CH 1/10W 1.5K	1	
R152	ERJ6GEYJ470	M.RESISTOR CH 1/10W 47	1	
R160-67	ERJ6GEYJ222	M.RESISTOR CH 1/10W 2.2K	8	
R202	ERJ6GEY0R00	M.RESISTOR CH 1/10W 0	1	

Ref.No.	Part No.	Part Name & Description	Pcs	Remarks
R203	ERJ6GEYJ103	M.RESISTOR CH 1/10W 10K	1	
R204	ERJ6GEYG563	M.RESISTOR CH 1/10W 56K	1	
R205	ERJ6GEYJ104	M.RESISTOR CH 1/10W 100K	1	
R206	ECUM1H820JCN	C.CAPACITOR CH 50V 82P	1	
R207-14	ERJ6GEYJ222	M.RESISTOR CH 1/10W 2.2K	8	
R218	ERJ6GEYJ104	M.RESISTOR CH 1/10W 100K	1	
R221-30	ERJ6GEYJ103	M.RESISTOR CH 1/10W 10K	10	
R231,32	ERJ6GEY0R00	M.RESISTOR CH 1/10W 0	2	
R235	ERJ6GEY0R00	M.RESISTOR CH 1/10W 0	1	
R241	ERJ6GEYG133	M.RESISTOR CH 1/10W 13K	1	
R242	ERJ6GEYJ103	M.RESISTOR CH 1/10W 10K	1	
R243	ERJ6GEYJ562	M.RESISTOR CH 1/10W 5.6K	1	
R245	ERJ6GEYJ103	M.RESISTOR CH 1/10W 10K	1	
R246-48	ECUM1H680JCN	C.CAPACITOR CH 50V 68P	3	
R251-82	ERJ6GEYJ222	M.RESISTOR CH 1/10W 2.2K	32	
R283	ERJ6GEYJ101	M.RESISTOR CH 1/10W 100	1	
R284	ERJ6GEYJ222	M.RESISTOR CH 1/10W 2.2K	1	
R285	ERJ6GEYJ330	M.RESISTOR CH 1/10W 33	1	
R286	ERJ6GEYJ101	M.RESISTOR CH 1/10W 100	1	
R287	ERJ6GEYJ222	M.RESISTOR CH 1/10W 2.2K	1	
R288	ERJ6GEYJ330	M.RESISTOR CH 1/10W 33	1	
R289	ERJ6GEYJ101	M.RESISTOR CH 1/10W 100	1	
R290	ERJ6GEYJ222	M.RESISTOR CH 1/10W 2.2K	1	
R291	ERJ6GEY0R00	M.RESISTOR CH 1/10W 0	1	
R292	ERJ6GEYJ330	M.RESISTOR CH 1/10W 33	1	
R301	ERJ6GEY0R00	M.RESISTOR CH 1/10W 0	1	
R311	ERJ6GEY0R00	M.RESISTOR CH 1/10W 0	1	
R321	ERJ6GEYG221	M.RESISTOR CH 1/10W 220	1	
R322	ERJ6GEYG222	M.RESISTOR CH 1/10W 2.2K	1	
R323	ERJ6GEYJ470	M.RESISTOR CH 1/10W 47	1	
R324	ERJ6GEYG301	M.RESISTOR CH 1/10W 300	1	
R325	ERJ6GEYJ222	M.RESISTOR CH 1/10W 2.2K	1	
R326	ERJ6GEYG222	M.RESISTOR CH 1/10W 2.2K	1	
R327	ERJ6GEYJ222	M.RESISTOR CH 1/10W 2.2K	1	
R328	ERJ6GEYJ470	M.RESISTOR CH 1/10W 47	1	
R329	ERJ6GEYJ222	M.RESISTOR CH 1/10W 2.2K	1	
R330	ERJ6GEYJ102	M.RESISTOR CH 1/10W 1K	1	
R331	ERJ6GEYG221	M.RESISTOR CH 1/10W 220	1	
R332	ERJ6GEYJ470	M.RESISTOR CH 1/10W 47	1	
R333	ERJ6GEYJ472	M.RESISTOR CH 1/10W 4.7K	1	
R334	ERJ6GEYJ102	M.RESISTOR CH 1/10W 1K	1	
R335,36	ERJ6GEYJ471	M.RESISTOR CH 1/10W 470	2	
R337	ERJ6GEYJ103	M.RESISTOR CH 1/10W 10K	1	
R338	ERJ6GEYJ332	M.RESISTOR CH 1/10W 3.3K	1	
R339	ERJ6GEYJ101	M.RESISTOR CH 1/10W 100	1	
R340	ERJ6GEYJ470	M.RESISTOR CH 1/10W 47	1	
R341	ERJ6GEYJ472	M.RESISTOR CH 1/10W 4.7K	1	
R342	ERJ6GEYJ101	M.RESISTOR CH 1/10W 100	1	
R343	ERJ6GEYJ103	M.RESISTOR CH 1/10W 10K	1	
R344,45	ERJ6GEYJ472	M.RESISTOR CH 1/10W 4.7K	2	
R346	ERJ6GEYJ272	M.RESISTOR CH 1/10W 2.7K	1	
R347	ERJ6GEYJ101	M.RESISTOR CH 1/10W 100	1	
R348	VRB0034E302	M.RESISTOR CH 1/10W 3K	1	
R349	VRB0034E123	M.RESISTOR CH 1/10W 12K	1	
R350	VRB0034E302	M.RESISTOR CH 1/10W 3K	1	
R351	ERJ6GEYJ102	M.RESISTOR CH 1/10W 1K	1	
R352	ERJ6GEYJ470	M.RESISTOR CH 1/10W 47	1	
R353,54	ERJ6GEYJ152	M.RESISTOR CH 1/10W 1.5K	2	
R355	ERJ6GEYJ471	M.RESISTOR CH 1/10W 470	1	
R356	ERJ6GEYJ102	M.RESISTOR CH 1/10W 1K	1	
R357	ERJ6GEYJ152	M.RESISTOR CH 1/10W 1.5K	1	
R358	ERJ6GEYG122	M.RESISTOR CH 1/10W 1.2K	1	
R359,60	ERJ6GEYJ101	M.RESISTOR CH 1/10W 100	2	
R361	ERJ6GEYJ103	M.RESISTOR CH 1/10W 10K	1	
R362	ERJ6GEYJ332	M.RESISTOR CH 1/10W 3.3K	1	
R363,64	ERJ6GEYJ472	M.RESISTOR CH 1/10W 4.7K	2	
R365	VRB0034E123	M.RESISTOR CH 1/10W 12K	1	
R366	ERJ6GEYJ102	M.RESISTOR CH 1/10W 1K	1	
R367	ERJ6GEYJ470	M.RESISTOR CH 1/10W 47	1	
R368,69	ERJ6GEYJ152	M.RESISTOR CH 1/10W 1.5K	2	
R370	ERJ6GEYJ471	M.RESISTOR CH 1/10W 470	1	
R371	ERJ6GEYJ102	M.RESISTOR CH 1/10W 1K	1	
R372	ERJ6GEYJ222	M.RESISTOR CH 1/10W 2.2K	1	
R373	ERJ6GEYG122	M.RESISTOR CH 1/10W 1.2K	1	
R374,75	ERJ6GEYJ101	M.RESISTOR CH 1/10W 100	2	

Ref.No.	Part No.	Part Name & Description	Pcs	Remarks
R376	ERJ6GEYJ103	M.RESISTOR CH 1/10W 10K	1	
R377	ERJ6GEYJ332	M.RESISTOR CH 1/10W 3.3K	1	
R378	ERJ6GEYJ472	M.RESISTOR CH 1/10W 4.7K	1	
R379-81	ERJ6GEYJ103	M.RESISTOR CH 1/10W 10K	3	
R382	ERJ6GEYJ472	M.RESISTOR CH 1/10W 4.7K	1	
R383	VRB0034E302	M.RESISTOR CH 1/10W 3K	1	
R384	VRB0034E123	M.RESISTOR CH 1/10W 12K	1	
R385-87	ERJ6GEY0R00	M.RESISTOR CH 1/10W 0	3	
R391	ERJ6GEYJ222	M.RESISTOR CH 1/10W 2.2K	1	
R392	ERJ6GEYJ102	M.RESISTOR CH 1/10W 1K	1	
R393	ERJ6GEYJ182	M.RESISTOR CH 1/10W 1.8K	1	
R394	ERJ6GEYJ102	M.RESISTOR CH 1/10W 1K	1	
R395	ERJ6GEYJ682	M.RESISTOR CH 1/10W 6.8K	1	
R396	ERJ6GEYG681	M.RESISTOR CH 1/10W 680	1	
R401	ERJ6GEYJ473	M.RESISTOR CH 1/10W 47K	1	
R402	ERJ6GEYJ153	M.RESISTOR CH 1/10W 15K	1	
R403	ERJ6GEYJ152	M.RESISTOR CH 1/10W 1.5K	1	
R405	ERJ6GEYJ103	M.RESISTOR CH 1/10W 10K	1	
R411	ERJ6GEY0R00	M.RESISTOR CH 1/10W 0	1	
R414	ERJ6GEY0R00	M.RESISTOR CH 1/10W 0	1	
R416	ERJ6GEY0R00	M.RESISTOR CH 1/10W 0	1	
R417	ERJ6GEYJ152	M.RESISTOR CH 1/10W 1.5K	1	
R421	ERJ6GEY0R00	M.RESISTOR CH 1/10W 0	1	
R424	ERJ6GEY0R00	M.RESISTOR CH 1/10W 0	1	
R431	ERJ6GEYJ152	M.RESISTOR CH 1/10W 1.5K	1	
R432	ERJ6GEYJ331	M.RESISTOR CH 1/10W 330	1	
R451	ERJ6GEYJ102	M.RESISTOR CH 1/10W 1K	1	
R452	ERJ6GEYJ470	M.RESISTOR CH 1/10W 47	1	
R453	ERJ6GEYJ182	M.RESISTOR CH 1/10W 1.8K	1	
R454,55	ERJ6GEYG223	M.RESISTOR CH 1/10W 22K	2	
R456	ERJ6GEYJ101	M.RESISTOR CH 1/10W 100	1	
R457	ERJ6GEYJ272	M.RESISTOR CH 1/10W 2.7K	1	
R458	ERJ6GEYG223	M.RESISTOR CH 1/10W 22K	1	
R459,60	ERJ6GEYJ101	M.RESISTOR CH 1/10W 100	2	
R461	ERJ6GEYJ472	M.RESISTOR CH 1/10W 4.7K	1	
R462	ERJ6GEYJ332	M.RESISTOR CH 1/10W 3.3K	1	
R463,64	ERJ6GEYJ103	M.RESISTOR CH 1/10W 10K	2	
R465	ERJ6GEYJ472	M.RESISTOR CH 1/10W 4.7K	1	
R466	ERJ6GEYJ103	M.RESISTOR CH 1/10W 10K	1	
R467	ERJ6GEYJ154	M.RESISTOR CH 1/10W 150K	1	
R468	ERJ6GEYJ472	M.RESISTOR CH 1/10W 4.7K	1	
R469,70	ERJ6GEYJ103	M.RESISTOR CH 1/10W 10K	2	
R471	ERJ6GEYG563	M.RESISTOR CH 1/10W 56K	1	
R472	ERJ6GEYJ105	M.RESISTOR CH 1/10W 1M	1	
R473	ERJ6GEYJ561	M.RESISTOR CH 1/10W 560	1	
R474	ERJ6GEYJ102	M.RESISTOR CH 1/10W 1K	1	
R475	ERJ6GEYJ101	M.RESISTOR CH 1/10W 100	1	
R479	ERJ6GEYJ103	M.RESISTOR CH 1/10W 10K	1	
R481	VRB0034E302	M.RESISTOR CH 1/10W 3K	1	
R482	VRB0034E123	M.RESISTOR CH 1/10W 12K	1	
R501	ERJ6GEYJ152	M.RESISTOR CH 1/10W 1.5K	1	
R502	ERJ6GEYJ271	M.RESISTOR CH 1/10W 270	1	
R503	ERJ6GEYJ102	M.RESISTOR CH 1/10W 1K	1	
R504	ERJ6GEYJ271	M.RESISTOR CH 1/10W 270	1	
R505	ERJ6GEYJ102	M.RESISTOR CH 1/10W 1K	1	
R506	ERJ6GEYJ332	M.RESISTOR CH 1/10W 3.3K	1	
R508	ERJ6GEY0R00	M.RESISTOR CH 1/10W 0	1	
R509	ERJ6GEYJ820	M.RESISTOR CH 1/10W 82	1	
R510	ERJ6GEYG301	M.RESISTOR CH 1/10W 300	1	
R511	ERJ6GEYJ470	M.RESISTOR CH 1/10W 47	1	
R512	ERJ6GEYJ272	M.RESISTOR CH 1/10W 2.7K	1	
R513	ERJ6GEYJ472	M.RESISTOR CH 1/10W 4.7K	1	
R514	ERJ6GEYJ470	M.RESISTOR CH 1/10W 47	1	
R515	ERJ6GEYJ153	M.RESISTOR CH 1/10W 15K	1	
R516	ERJ6GEYG681	M.RESISTOR CH 1/10W 680	1	
R517	ERJ6GEYJ332	M.RESISTOR CH 1/10W 3.3K	1	
R518	ERJ6GEYJ103	M.RESISTOR CH 1/10W 10K	1	
R519	ERJ6GEYJ154	M.RESISTOR CH 1/10W 150K	1	
R520	ERJ6GEYJ332	M.RESISTOR CH 1/10W 3.3K	1	
R521	ERJ6GEYG331	M.RESISTOR CH 1/10W 330	1	
R522	ERJ6GEYJ105	M.RESISTOR CH 1/10W 1M	1	
R523	ERJ6GEYJ103	M.RESISTOR CH 1/10W 10K	1	
R524	ERJ6GEYJ472	M.RESISTOR CH 1/10W 4.7K	1	
R525	ERJ6GEYJ103	M.RESISTOR CH 1/10W 10K	1	
R526	ERJ6GEYJ152	M.RESISTOR CH 1/10W 1.5K	1	

Ref.No.	Part No.	Part Name & Description	Pcs	Remarks
R527	ERJ6GEYJ271	M.RESISTOR CH 1/10W 270	1	
R528	ERJ6GEYJ102	M.RESISTOR CH 1/10W 1K	1	
R529	ERJ6GEYJ332	M.RESISTOR CH 1/10W 3.3K	1	
R530	ERJ6GEYJ473	M.RESISTOR CH 1/10W 47K	1	
R531	ERJ6GEYJ820	M.RESISTOR CH 1/10W 82	1	
R532	ERJ6GEYG301	M.RESISTOR CH 1/10W 300	1	
R533,34	ERJ6GEYJ470	M.RESISTOR CH 1/10W 47	2	
R535	ERJ6GEYJ472	M.RESISTOR CH 1/10W 4.7K	1	
R536	ERJ6GEYJ153	M.RESISTOR CH 1/10W 15K	1	
R537	ERJ6GEYJ272	M.RESISTOR CH 1/10W 2.7K	1	
R538	ERJ6GEYG681	M.RESISTOR CH 1/10W 680	1	
R539	ERJ6GEYJ332	M.RESISTOR CH 1/10W 3.3K	1	
R540	ERJ6GEYJ103	M.RESISTOR CH 1/10W 10K	1	
R541	ERJ6GEYJ154	M.RESISTOR CH 1/10W 150K	1	
R542	ERJ6GEYJ332	M.RESISTOR CH 1/10W 3.3K	1	
R543	ERJ6GEYG331	M.RESISTOR CH 1/10W 330	1	
R544	ERJ6GEYJ103	M.RESISTOR CH 1/10W 10K	1	
R545	ERJ6GEYJ105	M.RESISTOR CH 1/10W 1M	1	
R546	ERJ6GEYJ472	M.RESISTOR CH 1/10W 4.7K	1	
R547	ERJ6GEYJ103	M.RESISTOR CH 1/10W 10K	1	
R548	ERJ6GEYJ102	M.RESISTOR CH 1/10W 1K	1	
R549	ERJ6GEYJ473	M.RESISTOR CH 1/10W 47K	1	
R550	ERJ6GEYJ393	M.RESISTOR CH 1/10W 39K	1	
R552-54	ERJ6GEYJ222	M.RESISTOR CH 1/10W 2.2K	3	
R555	ERJ6GEYJ332	M.RESISTOR CH 1/10W 3.3K	1	
R556	ERJ6GEYJ222	M.RESISTOR CH 1/10W 2.2K	1	
R557	ERJ6GEYJ182	M.RESISTOR CH 1/10W 1.8K	1	
R558	ERJ6GEYJ222	M.RESISTOR CH 1/10W 2.2K	1	
R559,60	ERJ6GEY0R00	M.RESISTOR CH 1/10W 0	2	
R562,63	ERJ6GEYJ222	M.RESISTOR CH 1/10W 2.2K	2	
R564	ERJ6GEYJ332	M.RESISTOR CH 1/10W 3.3K	1	
R565	ERJ6GEYJ222	M.RESISTOR CH 1/10W 2.2K	1	
R566	ERJ6GEYJ470	M.RESISTOR CH 1/10W 47	1	
R567	ERJ6GEYJ222	M.RESISTOR CH 1/10W 2.2K	1	
R569	ERJ6GEYJ222	M.RESISTOR CH 1/10W 2.2K	1	
R571	ERJ6GEYJ102	M.RESISTOR CH 1/10W 1K	1	
R572	ERJ6GEYJ181	M.RESISTOR CH 1/10W 180	1	
R573	ERJ6GEYJ101	M.RESISTOR CH 1/10W 100	1	
R574	ERJ6GEYJ102	M.RESISTOR CH 1/10W 1K	1	
R575	ERJ6GEYJ470	M.RESISTOR CH 1/10W 47	1	
R576	ERJ6GEYJ224	M.RESISTOR CH 1/10W 220K	1	
R577	ERJ6GEYJ684	M.RESISTOR CH 1/10W 680K	1	
R578	ERJ6GEYJ103	M.RESISTOR CH 1/10W 10K	1	
R579	ERJ6GEYJ222	M.RESISTOR CH 1/10W 2.2K	1	
R580	ERJ6GEYJ102	M.RESISTOR CH 1/10W 1K	1	
R581	ERJ6GEYJ222	M.RESISTOR CH 1/10W 2.2K	1	
R582-84	ERJ6GEYJ103	M.RESISTOR CH 1/10W 10K	3	
R585,86	ERJ6GEYJ470	M.RESISTOR CH 1/10W 47	2	
R587,88	ERJ6GEYJ104	M.RESISTOR CH 1/10W 100K	2	
R589	ERJ6GEYG221	M.RESISTOR CH 1/10W 220	1	
R591	ERJ6GEYJ222	M.RESISTOR CH 1/10W 2.2K	1	
R592	ERJ6GEYJ102	M.RESISTOR CH 1/10W 1K	1	
R593-95	ERJ6GEYJ222	M.RESISTOR CH 1/10W 2.2K	3	
R596	ERJ6GEYJ332	M.RESISTOR CH 1/10W 3.3K	1	
R597	ERJ6GEYJ222	M.RESISTOR CH 1/10W 2.2K	1	
R598	ERJ6GEY0R00	M.RESISTOR CH 1/10W 0	1	
R601,02	ERJ6GEYJ222	M.RESISTOR CH 1/10W 2.2K	2	
R603-10	ERJ6GEYJ152	M.RESISTOR CH 1/10W 1.5K	8	
R613	VRE0034E361	M.RESISTOR CH 1/10W 360	1	
R614,15	VRE0034E102	M.RESISTOR CH 1/10W 1K	2	
R616	VRE0034E272	M.RESISTOR CH 1/10W 2.7K	1	
R617	VRE0034E202	M.RESISTOR CH 1/10W 2K	1	
R618	VRE0034E152	M.RESISTOR CH 1/10W 1.5K	1	
R620	ERJ6GEYJ102	M.RESISTOR CH 1/10W 1K	1	
R622	ERJ6GEYJ152	M.RESISTOR CH 1/10W 1.5K	1	
R623,24	ERJ6GEYG301	M.RESISTOR CH 1/10W 300	2	
R625	ERJ6GEYJ222	M.RESISTOR CH 1/10W 2.2K	1	
R626,27	ERJ6GEYG681	M.RESISTOR CH 1/10W 680	2	
R628	ERJ6GEYJ472	M.RESISTOR CH 1/10W 4.7K	1	
R630	ERJ6GEYJ222	M.RESISTOR CH 1/10W 2.2K	1	
R631	ERJ6GEYJ470	M.RESISTOR CH 1/10W 47	1	
R632	ERJ6GEYJ472	M.RESISTOR CH 1/10W 4.7K	1	
R633	ERJ6GEYJ272	M.RESISTOR CH 1/10W 2.7K	1	
R634	ERJ6GEYJ822	M.RESISTOR CH 1/10W 8.2K	1	
R635	ERJ6GEYJ222	M.RESISTOR CH 1/10W 2.2K	1	

Ref.No.	Part No.	Part Name & Description	Pcs	Remarks
R636	ERJ6GEYJ681	M.RESISTOR CH 1/10W 680	1	
R638	ERJ6GEYJ332	M.RESISTOR CH 1/10W 3.3K	1	
R640	ERJ6GEYJ101	M.RESISTOR CH 1/10W 100	1	
R641	ERJ6GEYJ102	M.RESISTOR CH 1/10W 1K	1	
R643	ERJ6GEYJ103	M.RESISTOR CH 1/10W 10K	1	
R644	ERJ6GEYJ101	M.RESISTOR CH 1/10W 100	1	
R645	ERJ6GEYJ103	M.RESISTOR CH 1/10W 10K	1	
R646	ERJ6GEYJ101	M.RESISTOR CH 1/10W 100	1	
R647	ERJ6GEYJ222	M.RESISTOR CH 1/10W 2.2K	1	
R648	ERJ6GEYJ330	M.RESISTOR CH 1/10W 33	1	
R656	ERJ6GEYJ471	M.RESISTOR CH 1/10W 470	1	
R658	VRE0034E302	M.RESISTOR CH 1/10W 3K	1	
R659	VRE0034E123	M.RESISTOR CH 1/10W 12K	1	
R701	ERJ6GEYJ103	M.RESISTOR CH 1/10W 10K	1	
R702	ERJ6GEYJ682	M.RESISTOR CH 1/10W 6.8K	1	
R703	ERJ6GEYJ222	M.RESISTOR CH 1/10W 2.2K	1	
R704	ERJ6GEYJ683	M.RESISTOR CH 1/10W 68K	1	
R705	ERJ6GEYJ332	M.RESISTOR CH 1/10W 3.3K	1	
R706,07	ERJ6GEYJ562	M.RESISTOR CH 1/10W 5.6K	2	
R708,09	ERJ6GEYJ332	M.RESISTOR CH 1/10W 3.3K	2	
R710	ERJ6GEYJ392	M.RESISTOR CH 1/10W 3.9K	1	
R711	ERJ6GEYJ103	M.RESISTOR CH 1/10W 10K	1	
R712	ERJ6GEYJ472	M.RESISTOR CH 1/10W 4.7K	1	
R713	ERJ6GEYJ152	M.RESISTOR CH 1/10W 1.5K	1	
R714	ERJ6GEYJ472	M.RESISTOR CH 1/10W 4.7K	1	
R715	ERJ6GEYJ103	M.RESISTOR CH 1/10W 10K	1	
R716	ERJ6GEYJ153	M.RESISTOR CH 1/10W 15K	1	
R717,18	ERJ6GEYJ104	M.RESISTOR CH 1/10W 100K	2	
R719	ERJ6GEYJ123	M.RESISTOR CH 1/10W 12K	1	
R720	ERJ6GEYG223	M.RESISTOR CH 1/10W 22K	1	
R721,22	ERJ6GEYJ103	M.RESISTOR CH 1/10W 10K	2	
R723	ERJ6GEYJ473	M.RESISTOR CH 1/10W 47K	1	
R724	ERJ6GEYJ104	M.RESISTOR CH 1/10W 100K	1	
R725	ERJ6GEYJ222	M.RESISTOR CH 1/10W 2.2K	1	
R726	ERJ6GEYJ472	M.RESISTOR CH 1/10W 4.7K	1	
R727	ERJ6GEYJ103	M.RESISTOR CH 1/10W 10K	1	
R728	ERJ6GEYJ102	M.RESISTOR CH 1/10W 1K	1	
R729	ERJ6GEYJ473	M.RESISTOR CH 1/10W 47K	1	
R731	ERJ6GEYJ393	M.RESISTOR CH 1/10W 39K	1	
R732	ERJ6GEYG223	M.RESISTOR CH 1/10W 22K	1	
R733	ERJ6GEYJ152	M.RESISTOR CH 1/10W 1.5K	1	
R734	ERJ6GEYJ102	M.RESISTOR CH 1/10W 1K	1	
R735,36	ERJ6GEYJ104	M.RESISTOR CH 1/10W 100K	2	
R737	ERJ6GEYJ152	M.RESISTOR CH 1/10W 1.5K	1	
R738,39	ERJ6GEYJ103	M.RESISTOR CH 1/10W 10K	2	
R743,44	ERJ6GEY0R00	M.RESISTOR CH 1/10W 0	2	
R746,47	ERJ6GEY0R00	M.RESISTOR CH 1/10W 0	2	
R748	ERJ6GEYJ103	M.RESISTOR CH 1/10W 10K	1	
R751	ERJ6GEYJ472	M.RESISTOR CH 1/10W 4.7K	1	
R752	ERJ6GEYJ152	M.RESISTOR CH 1/10W 1.5K	1	
R753,54	ERJ6GEYJ332	M.RESISTOR CH 1/10W 3.3K	2	
R755,56	ERJ6GEYJ222	M.RESISTOR CH 1/10W 2.2K	2	
R761	ERJ6GEYJ103	M.RESISTOR CH 1/10W 10K	1	
R762	ERJ6GEYJ822	M.RESISTOR CH 1/10W 8.2K	1	
R763,64	ERJ6GEYJ102	M.RESISTOR CH 1/10W 1K	2	
R765	ERJ6GEYJ332	M.RESISTOR CH 1/10W 3.3K	1	
R766	ERJ6GEYJ470	M.RESISTOR CH 1/10W 47	1	
R781	ERJ6GEYJ102	M.RESISTOR CH 1/10W 1K	1	
R782	ERJ6GEY0R00	M.RESISTOR CH 1/10W 0	1	
R784	ERJ6GEY0R00	M.RESISTOR CH 1/10W 0	1	
R786	ERJ6GEY0R00	M.RESISTOR CH 1/10W 0	1	
R788	ERJ6GEY0R00	M.RESISTOR CH 1/10W 0	1	
R790	ERJ6GEYJ103	M.RESISTOR CH 1/10W 10K	1	
R791	ERJ6GEYJ683	M.RESISTOR CH 1/10W 68K	1	
R792	ERJ6GEYJ104	M.RESISTOR CH 1/10W 100K	1	
R793,94	ERJ6GEYJ682	M.RESISTOR CH 1/10W 6.8K	2	
R795	ERJ6GEYG223	M.RESISTOR CH 1/10W 22K	1	
R796	ERJ6GEYJ391	M.RESISTOR CH 1/10W 390	1	
R797	ERJ6GEYJ152	M.RESISTOR CH 1/10W 1.5K	1	
R798	ERJ6GEYJ562	M.RESISTOR CH 1/10W 5.6K	1	
R799	ERJ6GEYJ152	M.RESISTOR CH 1/10W 1.5K	1	
R800-09	ERJ6GEY0R00	M.RESISTOR CH 1/10W 0	10	

Ref.No.		Part No.	Part Name & Description	Pcs	Remarks
SW101		VSS0126	SWITCH	1	
SW701		VSS0126	SWITCH	1	
TP1,P2		VJR0646	TEST POINT	2	
TP111		VJR0646	TEST POINT	1	
TP201-03		VJR0646	TEST POINT	3	
TP401-05		VJR0646	TEST POINT	5	
TP451,52		VJR0646	TEST POINT	2	
TP501,02		VJR0646	TEST POINT	2	
TP504		VJR0646	TEST POINT	1	
TP601		VJR0646	TEST POINT	1	
TP701-04		VJR0646	TEST POINT	4	
TPG201		VJR0646	TEST POINT	1	
TPG501,02		VJR0646	TEST POINT	2	
VC321		ECV1ZW50X53T	V.CAPACITOR 50P	1	
VL701		VLQ0415	COIL	1	
VR1,R2		VRV0109B102	V.RESISTOR 1K	2	
VR111		VRV0109B202	V.RESISTOR 2K	1	
VR112		VRV0109B502	V.RESISTOR 5K	1	
VR322		VRV0109B202	V.RESISTOR 2K	1	
VR323		VRV0109B102	V.RESISTOR 1K	1	
VR351,52		VRV0109B102	V.RESISTOR 1K	2	
VR366,67		VRV0109B102	V.RESISTOR 1K	2	
VR401		VRV0109B102	V.RESISTOR 1K	1	
VR403		VRV0109B103	V.RESISTOR 10K	1	
VR451		VRV0064B502	V.RESISTOR 5K	1	
VR501,02		VRV0109B202	V.RESISTOR 2K	2	
VR503		VRV0109B102	V.RESISTOR 1K	1	
VR504		VRV0109B202	V.RESISTOR 2K	1	
VR505		VRV0064B202	V.RESISTOR 2K	1	
VR511,12		VRV0109B202	V.RESISTOR 2K	2	
VR601,02		VRV0064B201	V.RESISTOR 200	2	
VR603,04		VRV0109B102	V.RESISTOR 1K	2	
VR701		VRV0064B202	V.RESISTOR 2K	1	
VR702-04		VRV0109B502	V.RESISTOR 5K	3	
VR781		VRV0109B502	V.RESISTOR 5K	1	
X201		VSX0270	CRYSTAL OSCILLATOR	1	
X701		VSX0149	CRYSTAL OSCILLATOR	1	
			MISCELLANEOUS		
		VML2143	CARD PULLER	1	
		VML2144	CARD PULLER	1	
		VMZ1547	BARRIER	1	
		VSC1871	SHIELD CASE	1	
		VSC1872	SHIELD CASE	1	
		VXA3966	P.C.B. SHIELD PLATE	1	
		XYNV3+K6FR	SCREW	5	

Ref.No.		Part No.	Part Name & Description	Pcs	Remarks
	■	VEP82061E	P.C.BOARD W/COMPONENT		FOR AU-65H,AU-62H
			W5 SERVO		
			CAPACITORS		
C1		ECQM1H273JF	P.CAPACITOR 50V 0.027U	1	
C2		ECUM1H152JN	C.CAPACITOR CH 50V 1500P	1	
C3,C4		ECUM1H101JCN	C.CAPACITOR CH 50V 100P	2	
C5		ECEA1CU100	E.CAPACITOR 16V 10U	1	
C6		ECEAOJU101	E.CAPACITOR 6.3V 100U	1	
C7		ECEA1AU470	E.CAPACITOR 10V 47U	1	
C8		ECUM1H103ZFN	C.CAPACITOR CH 50V 0.01U	1	
C9		ECQM1H154JF	P.CAPACITOR 50V 0.15U	1	
C10		ECEA1HN2R2S	E.CAPACITOR 50V 2.2U	1	
C11		ECQM1H223JF	P.CAPACITOR 50V 0.022U	1	
C13		ECQP1H822JZ	P.CAPACITOR 50V 8200P	1	
C14		ECQM1H682JV	P.CAPACITOR 50V 6800P	1	
C15,16		ECUM1H103ZFN	C.CAPACITOR CH 50V 0.01U	2	
C17		ECQM1H394JV	P.CAPACITOR 50V 0.39U	1	
C18		ECEA1HU4R7	E.CAPACITOR 50V 4.7U	1	
C19		ECEA1AU470	E.CAPACITOR 10V 47U	1	
C20,21		ECUM1H103ZFN	C.CAPACITOR CH 50V 0.01U	2	
C22		ECEA1HU2R2	E.CAPACITOR 50V 2.2U	1	
C23,24		ECUM1E104ZFN	C.CAPACITOR CH 25V 0.1U	2	
C25		ECUM1H103ZFN	C.CAPACITOR CH 50V 0.01U	1	
C26		ECEA1AU470	E.CAPACITOR 10V 47U	1	
C27		ECUM1H103ZFN	C.CAPACITOR CH 50V 0.01U	1	
C28		ECEA1AU470	E.CAPACITOR 10V 47U	1	
C29		ECEA1AU330	E.CAPACITOR 10V 33U	1	
C30		ECUM1H103ZFN	C.CAPACITOR CH 50V 0.01U	1	
C31		ECEA1AU330	E.CAPACITOR 10V 33U	1	
C32		ECEA1AU470	E.CAPACITOR 10V 47U	1	
C33		ECUM1H103ZFN	C.CAPACITOR CH 50V 0.01U	1	
C34		ECEA1AU470	E.CAPACITOR 10V 47U	1	
C39		ECUM1H331JCN	C.CAPACITOR CH 50V 330P	1	
C40-42		ECUM1H103ZFN	C.CAPACITOR CH 50V 0.01U	3	
C43		ECUM1H101JCN	C.CAPACITOR CH 50V 100P	1	
C46		ECEA1CU470	E.CAPACITOR 16V 47U	1	
C47,48		ECUM1E104ZFN	C.CAPACITOR CH 25V 0.1U	2	
C101		ECQM1H104JF	P.CAPACITOR 50V 0.1U	1	
C102		ECUM1H151JCN	C.CAPACITOR CH 50V 150P	1	
C103		ECEA1CU470	E.CAPACITOR 16V 47U	1	
C104		ECEA1HU2R2	E.CAPACITOR 50V 2.2U	1	
C105		ECEA1CU101	E.CAPACITOR 16V 100U	1	
C106		ECQM1H104JF	P.CAPACITOR 50V 0.1U	1	
C107		ECUM1H151JCN	C.CAPACITOR CH 50V 150P	1	
C108		ECUM1H102JCN	C.CAPACITOR CH 50V 1000P	1	
C109		ECUM1H221JCN	C.CAPACITOR CH 50V 220P	1	
C110		ECQM1H103JF	P.CAPACITOR 50V 0.01U	1	
C111		ECEA1HU010	E.CAPACITOR 50V 1U	1	
C112		ECQM1H154JF	P.CAPACITOR 50V 0.15U	1	
C113		ECEA1HU010	E.CAPACITOR 50V 1U	1	
C114		ECEA1CU470	E.CAPACITOR 16V 47U	1	
C115		ECUM1H103ZFN	C.CAPACITOR CH 50V 0.01U	1	
C116		ECEA1CU470	E.CAPACITOR 16V 47U	1	
C117		ECUM1H103ZFN	C.CAPACITOR CH 50V 0.01U	1	
C118		ECEA1CU470	E.CAPACITOR 16V 47U	1	
C119		ECUM1H103ZFN	C.CAPACITOR CH 50V 0.01U	1	
C120		ECEA1CU470	E.CAPACITOR 16V 47U	1	
C121		ECUM1H103ZFN	C.CAPACITOR CH 50V 0.01U	1	
C122		ECEA1CU470	E.CAPACITOR 16V 47U	1	
C123		ECUM1H330JCN	C.CAPACITOR CH 50V 33P	1	
C124		ECUM1H103ZFN	C.CAPACITOR CH 50V 0.01U	1	
C125		ECEA1CU470	E.CAPACITOR 16V 47U	1	
C126		ECQM1H562JF	P.CAPACITOR 50V 5600P	1	
C127		ECQM1H393JF	P.CAPACITOR 50V 0.039U	1	
C128		ECQM1H104JF	P.CAPACITOR 50V 0.1U	1	
C129		ECEA1OM22	E.CAPACITOR 10V 22U	1	
C130		ECEA1HU010	E.CAPACITOR 50V 1U	1	

Ref.No.		Part No.	Part Name & Description	Pcs	Remarks
C131		ECEA1EN220S	E.CAPACITOR 25V 22U	1	
C132		ECQM1H103JF	P.CAPACITOR 50V 0.01U	1	
C133-36		ECUM1H103ZFN	C.CAPACITOR CH 50V 0.01U	4	
C137		ECEA1CU101	E.CAPACITOR 16V 100U	1	
C138		ECEA1CU470	E.CAPACITOR 16V 47U	1	
C139		ECQM1H822JF	P.CAPACITOR 50V 8200P	1	
C140		ECUM1H102JCN	C.CAPACITOR CH 50V 1000P	1	
C141		ECEA1HN010S	E.CAPACITOR 50V 1U	1	
C142		ECEA1CU101	E.CAPACITOR 16V 100U	1	
C143		ECEA1CU470	E.CAPACITOR 16V 47U	1	
C144		ECEA1CU220	E.CAPACITOR 16V 22U	1	
C145		ECEA1AU470	E.CAPACITOR 10V 47U	1	
C146		ECUM1H103ZFN	C.CAPACITOR CH 50V 0.01U	1	
C147		ECEA1HUR47	E.CAPACITOR 50V 0.47U	1	
C148		ECEA1CU470	E.CAPACITOR 16V 47U	1	
C149,50		ECUM1H103ZFN	C.CAPACITOR CH 50V 0.01U	2	
C151		ECEA1HN010S	E.CAPACITOR 50V 1U	1	
C152,53		ECUM1H103ZFN	C.CAPACITOR CH 50V 0.01U	2	
C154		ECUM1H152KBN	C.CAPACITOR CH 50V 1500P	1	
C155		ECEA1HN100S	E.CAPACITOR 50V 10U	1	
C156		ECEA1HUR47	E.CAPACITOR 50V 0.47U	1	
C157,58		ECUM1H103ZFN	C.CAPACITOR CH 50V 0.01U	2	
C159		ECQM1H104JF	P.CAPACITOR 50V 0.1U	1	
C160		ECUM1H103ZFN	C.CAPACITOR CH 50V 0.01U	1	
C161		ECQM1H104JF	P.CAPACITOR 50V 0.1U	1	
C162,63		ECQM1H103JF	P.CAPACITOR 50V 0.01U	2	
C164		ECEA1HU4R7	E.CAPACITOR 50V 4.7U	1	
C165-67		ECUM1H103ZFN	C.CAPACITOR CH 50V 0.01U	3	
C168		ECEA1EU100	E.CAPACITOR 25V 10U	1	
C169		ECQM1H103JF	P.CAPACITOR 50V 0.01U	1	
C170		ECUM1H471JCN	C.CAPACITOR CH 50V 470P	1	
C171,72		ECUM1H103ZFN	C.CAPACITOR CH 50V 0.01U	2	
C173		ECUM1H101JCN	C.CAPACITOR CH 50V 100P	1	
C174		ECUM1H103ZFN	C.CAPACITOR CH 50V 0.01U	1	
C175		ECEA1HU2R2	E.CAPACITOR 50V 2.2U	1	
C176		ECEA1CU470	E.CAPACITOR 16V 47U	1	
C177		ECQM1H222JF	P.CAPACITOR 50V 2200P	1	
C179		ECUM1H221JCN	C.CAPACITOR CH 50V 220P	1	
C301		ECEA1AU330	E.CAPACITOR 10V 33U	1	
C302		ECUM1H103ZFN	C.CAPACITOR CH 50V 0.01U	1	
C303		ECQM1H562JF	P.CAPACITOR 50V 5600P	1	
C304		ECQM1H392JF	P.CAPACITOR 50V 3900P	1	
C305		ECUM1H103ZFN	C.CAPACITOR CH 50V 0.01U	1	
C306		ECQM1H123JF	P.CAPACITOR 50V 0.012U	1	
C307		ECEA1CN470S	E.CAPACITOR 16V 47U	1	
C308		ECEAOJU221	E.CAPACITOR 6.3V 220U	1	
C309		ECEA1HU2R2	E.CAPACITOR 50V 2.2U	1	
C310		ECQM1H104JF	P.CAPACITOR 50V 0.1U	1	
C311		ECUM1H153KBN	C.CAPACITOR CH 50V 0.015U	1	
C312		ECEA1HN010S	E.CAPACITOR 50V 1U	1	
C313,14		ECUM1H103ZFN	C.CAPACITOR CH 50V 0.01U	2	
C315		ECQM1H104JF	P.CAPACITOR 50V 0.1U	1	
C316		ECUM1E273KBN	C.CAPACITOR CH 25V 0.027U	1	
C317		ECEA1HN2R2S	E.CAPACITOR 50V 2.2U	1	
C318-20		ECUM1H103ZFN	C.CAPACITOR CH 50V 0.01U	3	
C321		ECEA1CU100	E.CAPACITOR 16V 10U	1	
C322		ECEAOJU470	E.CAPACITOR 6.3V 47U	1	
C323		ECUM1H103ZFN	C.CAPACITOR CH 50V 0.01U	1	
C324		ECEAOJU471	E.CAPACITOR 6.3V 470U	1	
C327		ECEA1HU2R2	E.CAPACITOR 50V 2.2U	1	
C330-36		ECUM1H103ZFN	C.CAPACITOR CH 50V 0.01U	7	
C338		ECEA1CU100	E.CAPACITOR 16V 10U	1	
C342		ECQM1H104JF	P.CAPACITOR 50V 0.1U	1	
C401-03		ECUM1H103ZFN	C.CAPACITOR CH 50V 0.01U	3	
C406-10		ECUM1H103ZFN	C.CAPACITOR CH 50V 0.01U	5	
C454		ECUM1H103ZFN	C.CAPACITOR CH 50V 0.01U	1	
C492		ECUM1H103ZFN	C.CAPACITOR CH 50V 0.01U	1	
C495,96		ECUM1H103ZFN	C.CAPACITOR CH 50V 0.01U	2	
C501		ECUM1H103ZFN	C.CAPACITOR CH 50V 0.01U	1	
C502		ECEA1CU470	E.CAPACITOR 16V 47U	1	
C503		ECEA1ESS471	E.CAPACITOR 25V 470U	1	
C504		ECUM1E473KBN	C.CAPACITOR CH 25V 0.047U	1	
C505		ECUM1H561JCN	C.CAPACITOR CH 50V 560P	1	
C506		ECUM1H820JCN	C.CAPACITOR CH 50V 82P	1	
C507		ECUM1H561JCN	C.CAPACITOR CH 50V 560P	1	

Ref.No.	Part No.	Part Name & Description	Pcs	Remarks
C508	ECEA1HU010	E.CAPACITOR 50V 1U	1	
C509-13	ECEA1ESS101	E.CAPACITOR 25V 100U	5	
C514	ECQM1H104JF	P.CAPACITOR 50V 0.1U	1	
C515	ECEA1EU4R7	E.CAPACITOR 25V 4.7U	1	
C516-18	ECEA1HN4R7S	E.CAPACITOR 50V 4.7U	3	
C519	ECEA1HU010	E.CAPACITOR 50V 1U	1	
C520-22	ECUM1H103KBN	C.CAPACITOR CH 50V 0.01U	3	
C523	ECQM1H104JF	P.CAPACITOR 50V 0.1U	1	
C524	ECEA1EU4R7	E.CAPACITOR 25V 4.7U	1	
C525,26	ECEA1HN4R7S	E.CAPACITOR 50V 4.7U	2	
C527	ECQM1H104JF	P.CAPACITOR 50V 0.1U	1	
C528	ECEA1HU010	E.CAPACITOR 50V 1U	1	
C529-31	ECUM1H103KBN	C.CAPACITOR CH 50V 0.01U	3	
C532	ECEA1EU4R7	E.CAPACITOR 25V 4.7U	1	
C533,34	ECEA1HN4R7S	E.CAPACITOR 50V 4.7U	2	
C535	ECQB1H224JF	P.CAPACITOR 50V 0.22U	1	
C536	ECEA1HU010	E.CAPACITOR 50V 1U	1	
C537-39	ECUM1H103KBN	C.CAPACITOR CH 50V 0.01U	3	
C540	ECEA1EU4R7	E.CAPACITOR 25V 4.7U	1	
C541-43	ECEA1HN4R7S	E.CAPACITOR 50V 4.7U	3	
C544	ECQB1H224JF	P.CAPACITOR 50V 0.22U	1	
C545	ECEA1HU010	E.CAPACITOR 50V 1U	1	
C546-48	ECUM1H103KBN	C.CAPACITOR CH 50V 0.01U	3	
C549	ECEA1AU470	E.CAPACITOR 10V 47U	1	
C550	ECUM1E473KBN	C.CAPACITOR CH 25V 0.047U	1	
C551	ECEA1HN4R7S	E.CAPACITOR 50V 4.7U	1	
C552	ECQM1H104JF	P.CAPACITOR 50V 0.1U	1	
C553	ECEA1HN4R7S	E.CAPACITOR 50V 4.7U	1	
C558-63	ECQM1H104JF	P.CAPACITOR 50V 0.1U	6	
C600	ECUM1H680JCN	C.CAPACITOR CH 50V 68P	1	
C601	ECUM1H050DCN	C.CAPACITOR CH 50V 50P	1	
C602	ECUM1H680JCN	C.CAPACITOR CH 50V 68P	1	
C603	ECUM1H050DCN	C.CAPACITOR CH 50V 50P	1	
C900-11	ECUM1H103ZFN	C.CAPACITOR CH 50V 0.01U	12	
D1	MA151K	DIODE	1	
D4	MA151K	DIODE	1	
D101	MA151K	DIODE	1	
D102	MA153	DIODE	1	
D103	MA151WK	DIODE	1	
D104	MA151K	DIODE	1	
D105	MA151WK	DIODE	1	
D106,07	MA151WA	DIODE	2	
D108	MA151K	DIODE	1	
D109	MA151WK	DIODE	1	
D110,11	MA153	DIODE	2	
D112	MA151WK	DIODE	1	
D113,14	MA151K	DIODE	2	
D115	MA153	DIODE	1	
D116	MA151K	DIODE	1	
D119	MA151WK	DIODE	1	
D120-22	MA151WA	DIODE	3	
D123	MA151K	DIODE	1	
D125	MA151K	DIODE	1	
D126,27	MA153	DIODE	2	
D128	MA151WA	DIODE	1	
D129	MA151K	DIODE	1	
D302	MA151K	DIODE	1	
D303	MA151WK	DIODE	1	
D304	MA151WA	DIODE	1	
D305	MA151K	DIODE	1	
D307	MA151WA	DIODE	1	
D309	MA151WK	DIODE	1	
D310	MA151K	DIODE	1	
D313	MA151WA	DIODE	1	
D314-17	MA151WK	DIODE	4	
D318	MA151K	DIODE	1	
D319,20	MA151WK	DIODE	2	
D321,22	MA151K	DIODE	2	
D323,24	MA151WK	DIODE	2	
D325	MA151K	DIODE	1	
D330	MA151K	DIODE	1	
D333	MA151WK	DIODE	1	

Ref.No.	Part No.	Part Name & Description	Pcs	Remarks
D334,35	MA151K	DIODE	2	
D337	ERJ6GEYJ824	M.RESISTOR CH 1/10W 820K	1	
D338	MA151K	DIODE	1	
D340	MA151WA	DIODE	1	
D341	MA151K	DIODE	1	
D345,46	MA151WA	DIODE	2	
D349	MA151WK	DIODE	1	
D351	MA151K	DIODE	1	
D501	MA151K	DIODE	1	
D502	MA151WK	DIODE	1	
D503	MA153	DIODE	1	
D504	MA151WK	DIODE	1	
D505,06	MA151K	DIODE	2	
D507	MA151WK	DIODE	1	
D508,09	MA151K	DIODE	2	
D510	MA151WK	DIODE	1	
D511	MA151K	DIODE	1	
D514-17	MA701A	DIODE	4	
D572	MA151K	DIODE	1	
IC1	LM2904M	IC	1	
IC2	LM2903M	IC	1	
IC3	LM2904M	IC	1	
IC4	NJM4558M	IC	1	
IC5	MC14538BF	IC	1	
IC6	UPD65031F405	IC	1	
IC7	MN53015VZW	IC	1	
IC8	MC14049UBF	IC	1	
IC9	MC14013BF	IC	1	
IC10	MM74HC221AM	IC	1	
IC11	AN78L05	IC	1	
IC12	MC14021BF	IC	1	
IC13	MC14094BF	IC	1	
IC14	MC14053BF	IC	1	(R)
IC15	MC14049UBF	IC	1	
IC16	MC14050BF	IC	1	
IC17	SN74LS01NS	IC	1	
IC18	MN51020VZZ	IC	1	
IC101	LM2904M	IC	1	
IC102	LM2903M	IC	1	
IC103	LM2904M	IC	1	
IC104	MC14538BF	IC	1	
IC105	AN79L09	IC	1	
IC106	AN78N09	IC	1	
IC107	DN74LS293S	IC	1	
IC108	MC74HC00AF	IC	1	
IC109	MN6064R	IC	1	
IC110	MN6168VIA	IC	1	
IC111	MC74HCU04F	IC	1	
IC112	MC14049UBF	IC	1	
IC113,14	LM2904M	IC	2	
IC115	LM2903M	IC	1	
IC116,17	LM2904M	IC	2	
IC118-20	MC14066BF	IC	3	
IC121	MC14052BF	IC	1	
IC122,23	MC14053BF	IC	2	(R)
IC124	MN53030VYA	IC	1	
IC125	MN53007VYC	IC	1	
IC126	UPC4558G2	IC	1	
IC128	NJM4558M	IC	1	
IC129	MC14538BF	IC	1	
IC130	MC14013BF	IC	1	
IC131	LM2904M	IC	1	
IC132	UPC4558G2	IC	1	
IC133	MN4030BS	IC	1	
IC134	MC14538BF	IC	1	
IC135	MC14053BF	IC	1	(R)
IC136	MC74HC02AF	IC	1	
IC137	MC14538BF	IC	1	
IC301	AN78L05	IC	1	
IC302	LM2904M	IC	1	
IC303	LM2902M	IC	1	
IC304	MC14053BF	IC	1	(R)

Ref.No.		Part No.	Part Name & Description	Pcs	Remarks
IC305		MC14066BF	IC	1	
IC306		LM2904M	IC	1	
IC307		LM2902M	IC	1	
IC308,09		LM2904M	IC	2	
IC310-13		MC14066BF	IC	4	
IC314		MC14028BF	IC	1	
IC315		MC14081BF	IC	1	
IC316		NJM2901M	IC	1	
IC318		MC14538BF	IC	1	
IC319		MC14049UBF	IC	1	
IC501		BA6149LS	IC	1	
IC502		PU4213	IC	1	
IC503-06		AN3821K	IC	4	
IC600,01		MC74HCU04F	IC	2	
IC800		LM2904M	IC	1	
L1		VLP0017	COIL	1	
L2-14		VLQEL05S221J	COIL 220UH	3	
L101,02		VLQEL05S221J	COIL 220UH	2	
L501		VLQ0214	COIL 50UH	1	
L504-07		VLQ0129	COIL 300UH	4	
Q1,Q2		UN2213	TRANSISTOR-RESISTOR	2	
Q5-Q9		UN2213	TRANSISTOR-RESISTOR	5	
Q12-16		UN2213	TRANSISTOR-RESISTOR	5	
Q101		2SD601-R	TRANSISTOR CHIP	1	(Q,R)
Q102		UN2213	TRANSISTOR-RESISTOR	1	
Q103		2SJ43	TRANSISTOR	1	
Q104		UN2213	TRANSISTOR-RESISTOR	1	
Q105		2SD601-R	TRANSISTOR CHIP	1	(Q,R)
Q106-08		UN2213	TRANSISTOR-RESISTOR	3	
Q109		2SD601-R	TRANSISTOR CHIP	1	(Q,R)
Q110-19		UN2213	TRANSISTOR-RESISTOR	10	
Q120		2SD601-R	TRANSISTOR CHIP	1	(Q,R)
Q121		UN2213	TRANSISTOR-RESISTOR	1	
Q122		2SD601-R	TRANSISTOR CHIP	1	(Q,R)
Q123,24		UN2213	TRANSISTOR-RESISTOR	2	
Q125		2SB709-R	TRANSISTOR CHIP	1	(Q,R)
Q126		2SD601-R	TRANSISTOR CHIP	1	(Q,R)
Q127		UN2115	COMBINATION PARTS	1	
Q128		UN2213	TRANSISTOR-RESISTOR	1	
Q129		UN2214	TRANSISTOR-RESISTOR	1	
Q130		2SK374	TRANSISTOR	1	
Q131-33		UN2213	TRANSISTOR-RESISTOR	3	
Q134,35		2SB709-R	TRANSISTOR CHIP	2	(Q,R)
Q136-39		UN2213	TRANSISTOR-RESISTOR	4	
Q301,02		UN2213	TRANSISTOR-RESISTOR	2	
Q303		UN2113	TRANSISTOR-RESISTOR	1	
Q304		UN2213	TRANSISTOR-RESISTOR	1	
Q305		UN2113	TRANSISTOR-RESISTOR	1	
Q306-08		UN2213	TRANSISTOR-RESISTOR	3	
Q312-14		UN2213	TRANSISTOR-RESISTOR	3	
Q316		2SD601-R	TRANSISTOR CHIP	1	(Q,R)
Q317		UN2213	TRANSISTOR-RESISTOR	1	
Q319		2SD601-R	TRANSISTOR CHIP	1	(Q,R)
Q320		UN2213	TRANSISTOR-RESISTOR	1	
Q336,37		UN2213	TRANSISTOR-RESISTOR	2	
Q340		UN2213	TRANSISTOR-RESISTOR	1	
Q343		UN2213	TRANSISTOR-RESISTOR	1	
Q346,47		UN2213	TRANSISTOR-RESISTOR	2	
Q501-04		2SB709-R	TRANSISTOR CHIP	4	(Q,R)
Q505		UN2113	TRANSISTOR-RESISTOR	1	
Q506		UN2213	TRANSISTOR-RESISTOR	1	
Q507		UN2113	TRANSISTOR-RESISTOR	1	
Q508,09		UN2213	TRANSISTOR-RESISTOR	2	
			RESISTORS		
R1		ERJ6GEYJ103	M.RESISTOR CH 1/10W 10K	1	
R2		ERJ6GEYJ683	M.RESISTOR CH 1/10W 68K	1	

Ref.No.		Part No.	Part Name & Description	Pcs	Remarks
R3		ERJ6GEYJ103	M.RESISTOR CH 1/10W 10K	1	
R4		ERJ6GEYJ105	M.RESISTOR CH 1/10W 1M	1	
R5,R6		ERJ6GEYJ103	M.RESISTOR CH 1/10W 10K	2	
R7		ERJ6GEYJ155	M.RESISTOR CH 1/10W 1M	1	
R8		ERJ6GEYJ103	M.RESISTOR CH 1/10W 10K	1	
R9		ERJ6GEYJ125	M.RESISTOR CH 1/10W 1.2M	1	
R10		ERJ6GEYG563	M.RESISTOR CH 1/10W 56K	1	
R11,12		VRE0034E102	M.RESISTOR CH 1/10W 1K	2	
R13		ERJ6GEYJ123	M.RESISTOR CH 1/10W 12K	1	
R14		ERJ6GEYJ823	M.RESISTOR CH 1/10W 82K	1	
R15		ERJ6GEYJ393	M.RESISTOR CH 1/10W 39K	1	
R16		ERJ6GEYJ824	M.RESISTOR CH 1/10W 820K	1	
R17		ERJ6GEYJ822	M.RESISTOR CH 1/10W 8.2K	1	
R18		ERJ6GEYJ183	M.RESISTOR CH 1/10W 18K	1	
R19		ERJ6GEYJ882	M.RESISTOR CH1/10W 8.8K	1	
R20		ERJ6GEYJ822	M.RESISTOR CH 1/10W 8.2K	1	
R21		ERJ6GEYJ104	M.RESISTOR CH 1/10W 100K	1	
R22		ERJ6GEYJ472	M.RESISTOR CH 1/10W 4.7K	1	
R23		ERJ6GEYJ103	M.RESISTOR CH 1/10W 10K	1	
R24		ERJ6GEYG563	M.RESISTOR CH 1/10W 56K	1	
R25		ERJ6GEYJ102	M.RESISTOR CH 1/10W 1K	1	
R27		ERJ6GEYJ123	M.RESISTOR CH 1/10W 12K	1	
R28-31		ERJ6GEYG563	M.RESISTOR CH 1/10W 56K	4	
R34,35		ERJ6GEYJ103	M.RESISTOR CH 1/10W 10K	2	
R36		ERJ6GEYJ562	M.RESISTOR CH 1/10W 5.6K	1	
R37-44		ERJ6GEYG563	M.RESISTOR CH 1/10W 56K	8	
R45		ERJ6GEYJ104	M.RESISTOR CH 1/10W 100K	1	
R50		ERJ6GEYG563	M.RESISTOR CH 1/10W 56K	1	
R51		ERJ6GEYJ103	M.RESISTOR CH 1/10W 10K	1	
R52		ERJ6GEYJ474	M.RESISTOR CH 1/10W 470K	1	
R53		ERJ6GEYG563	M.RESISTOR CH 1/10W 56K	1	
R54		ERJ6GEYJ103	M.RESISTOR CH 1/10W 10K	1	
R55		ERJ6GEYJ474	M.RESISTOR CH 1/10W 470K	1	
R56		ERJ6GEYG563	M.RESISTOR CH 1/10W 56K	1	
R57		ERJ6GEYJ103	M.RESISTOR CH 1/10W 10K	1	
R58		ERJ6GEYJ474	M.RESISTOR CH 1/10W 470K	1	
R59		ERJ6GEYJ103	M.RESISTOR CH 1/10W 10K	1	
R60		ERJ6GEYJ102	M.RESISTOR CH 1/10W 1K	1	
R61		ERJ6GEYG223	M.RESISTOR CH 1/10W 22K	1	
R62		ERJ6GEYJ103	M.RESISTOR CH 1/10W 10K	1	
R64		ERJ6GEYJ153	M.RESISTOR CH 1/10W 15K	1	
R65		ERJ6GEYJ683	M.RESISTOR CH 1/10W 68K	1	
R69,70		ERJ6GEYJ102	M.RESISTOR CH 1/10W 1K	2	
R101		ERJ6GEYJ103	M.RESISTOR CH 1/10W 10K	1	
R102		ERJ6GEYJ184	M.RESISTOR CH 1/10W 180K	1	
R103		ERJ6GEYJ102	M.RESISTOR CH 1/10W 1K	1	
R104		ERJ6GEYJ474	M.RESISTOR CH 1/10W 470K	1	
R105-07		ERJ6GEYJ103	M.RESISTOR CH 1/10W 10K	3	
R108		ERJ6GEYJ184	M.RESISTOR CH 1/10W 180K	1	
R109		ERJ6GEYJ102	M.RESISTOR CH 1/10W 1K	1	
R110		ERJ6GEYJ474	M.RESISTOR CH 1/10W 470K	1	
R111		ERJ6GEYJ103	M.RESISTOR CH 1/10W 10K	1	
R112		ERJ6GEYJ153	M.RESISTOR CH 1/10W 15K	1	
R113		ERJ6GEYJ562	M.RESISTOR CH 1/10W 5.6K	1	
R114		ERJ6GEYJ224	M.RESISTOR CH 1/10W 220K	1	
R115		ERJ6GEYJ682	M.RESISTOR CH 1/10W 6.8K	1	
R116		ERJ6GEYJ153	M.RESISTOR CH 1/10W 15K	1	
R117		ERJ6GEYJ104	M.RESISTOR CH 1/10W 100K	1	
R118		ERJ6GEYJ103	M.RESISTOR CH 1/10W 10K	1	
R119		ERJ6GEYJ153	M.RESISTOR CH 1/10W 15K	1	
R120-22		ERJ6GEYJ103	M.RESISTOR CH 1/10W 10K	3	
R123		ERJ6GEYJ105	M.RESISTOR CH 1/10W 1M	1	
R124		ERJ6GEYJ272	M.RESISTOR CH 1/10W 2.7K	1	
R125		ERJ6GEYJ103	M.RESISTOR CH 1/10W 10K	1	
R126-32		ERJ6GEYG563	M.RESISTOR CH 1/10W 56K	7	
R133,34		ERJ6GEYJ103	M.RESISTOR CH 1/10W 10K	2	
R135,36		ERJ6GEYG563	M.RESISTOR CH 1/10W 56K	2	
R137		ERJ6GEYJ103	M.RESISTOR CH 1/10W 10K	1	
R138		ERJ6GEYG563	M.RESISTOR CH 1/10W 56K	1	
R139		ERJ6GEYJ224	M.RESISTOR CH 1/10W 220K	1	
R140		ERJ6GEYG563	M.RESISTOR CH 1/10W 56K	1	
R141		ERJ6GEYJ224	M.RESISTOR CH 1/10W 220K	1	
R142		ERJ6GEYG563	M.RESISTOR CH 1/10W 56K	1	
R143		ERJ6GEYG223	M.RESISTOR CH 1/10W 22K	1	
R144		ERJ6GEYJ103	M.RESISTOR CH 1/10W 10K	1	

Ref.No.	Part No.	Part Name & Description	Pcs	Remarks
R145	ERJ6GEYG563	M.RESISTOR CH 1/10W 56K	1	
R146	ERJ6GEYJ562	M.RESISTOR CH 1/10W 5.6K	1	
R147,48	ERJ6GEYJ273	M.RESISTOR CH 1/10W 27K	2	
R149	ERJ6GEYJ104	M.RESISTOR CH 1/10W 100K	1	
R150	ERJ6GEYJ183	M.RESISTOR CH 1/10W 18K	1	
R151	ERJ6GEYJ103	M.RESISTOR CH 1/10W 10K	1	
R152	ERJ6GEYJ824	M.RESISTOR CH 1/10W 820K	1	
R153	ERJ6GEYJ562	M.RESISTOR CH 1/10W 5.6K	1	
R154-56	ERJ6GEYJ393	M.RESISTOR CH 1/10W 39K	3	
R157,58	ERJ6GEYJ183	M.RESISTOR CH 1/10W 18K	2	
R159	ERJ6GEYJ682	M.RESISTOR CH 1/10W 6.8K	1	
R160	ERJ6GEYJ183	M.RESISTOR CH 1/10W 18K	1	
R161	ERJ6GEYJ103	M.RESISTOR CH 1/10W 10K	1	
R162	ERJ6GEYG563	M.RESISTOR CH 1/10W 56K	1	
R163	ERJ6GEYJ103	M.RESISTOR CH 1/10W 10K	1	
R164	ERJ6GEYJ562	M.RESISTOR CH 1/10W 5.6K	1	
R165	ERJ6GEYG563	M.RESISTOR CH 1/10W 56K	1	
R166	ERJ6GEYJ272	M.RESISTOR CH 1/10W 2.7K	1	
R167	ERJ6GEYJ333	M.RESISTOR CH 1/10W 33K	1	
R168	ERJ6GEYJ473	M.RESISTOR CH 1/10W 47K	1	
R169	ERJ6GEYJ183	M.RESISTOR CH 1/10W 18K	1	
R170,71	ERJ6GEYG563	M.RESISTOR CH 1/10W 56K	2	
R172	ERJ6GEYJ102	M.RESISTOR CH 1/10W 1K	1	
R181,82	ERJ6GEYG563	M.RESISTOR CH 1/10W 56K	2	
R183	ERJ6GEYJ102	M.RESISTOR CH 1/10W 1K	1	
R184	ERJ6GEYG563	M.RESISTOR CH 1/10W 56K	1	
R185	ERJ6GEYJ104	M.RESISTOR CH 1/10W 100K	1	
R186	ERJ6GEYJ102	M.RESISTOR CH 1/10W 1K	1	
R187,88	ERJ6GEYJ822	M.RESISTOR CH 1/10W 8.2K	2	
R189	ERJ6GEYJ561	M.RESISTOR CH 1/10W 560	1	
R190	ERJ6GEYJ472	M.RESISTOR CH 1/10W 4.7K	1	
R191,92	ERJ6GEYG563	M.RESISTOR CH 1/10W 56K	2	
R193,94	ERJ6GEYJ273	M.RESISTOR CH 1/10W 27K	2	
R195	ERJ6GEYJ562	M.RESISTOR CH 1/10W 5.6K	1	
R196	ERJ6GEYJ153	M.RESISTOR CH 1/10W 15K	1	
R197	ERJ6GEYJ332	M.RESISTOR CH 1/10W 3.3K	1	
R198	ERJ6GEYJ561	M.RESISTOR CH 1/10W 560	1	
R199	ERJ6GEYJ273	M.RESISTOR CH 1/10W 27K	1	
R200	ERJ6GEYG223	M.RESISTOR CH 1/10W 22K	1	
R201	ERJ6GEYJ473	M.RESISTOR CH 1/10W 47K	1	
R202	ERJ6GEYJ562	M.RESISTOR CH 1/10W 5.6K	1	
R203	ERJ6GEYJ561	M.RESISTOR CH 1/10W 560	1	
R204	ERJ6GEYJ562	M.RESISTOR CH 1/10W 5.6K	1	
R205	ERJ6GEYJ101	M.RESISTOR CH 1/10W 100	1	
R206	ERJ6GEYJ104	M.RESISTOR CH 1/10W 100K	1	
R207-09	ERJ6GEYJ102	M.RESISTOR CH 1/10W 1K	3	
R210	ERJ6GEYJ153	M.RESISTOR CH 1/10W 15K	1	
R211	ERJ6GEYJ183	M.RESISTOR CH 1/10W 18K	1	
R212	ERJ6GEYJ683	M.RESISTOR CH 1/10W 68K	1	
R213-15	ERJ6GEYG563	M.RESISTOR CH 1/10W 56K	3	
R216	ERJ6GEYJ105	M.RESISTOR CH 1/10W 1M	1	
R218	ERJ6GEYG563	M.RESISTOR CH 1/10W 56K	1	
R219	ERJ6GEYJ103	M.RESISTOR CH 1/10W 10K	1	
R220	ERJ6GEYJ104	M.RESISTOR CH 1/10W 100K	1	
R222-27	ERJ6GEYG563	M.RESISTOR CH 1/10W 56K	6	
R228	ERJ6GEYJ104	M.RESISTOR CH 1/10W 100K	1	
R229	ERJ6GEYG223	M.RESISTOR CH 1/10W 22K	1	
R230	ERJ6GEYG563	M.RESISTOR CH 1/10W 56K	1	
R231	ERJ6GEYJ104	M.RESISTOR CH 1/10W 100K	1	
R232	VRE0034E272	M.RESISTOR CH 1/10W 2.7K	1	
R233	VRE0034E104	M.RESISTOR CH 1/10W 100K	1	
R234	VRE0034E272	M.RESISTOR CH 1/10W 2.7K	1	
R235	VRE0034E104	M.RESISTOR CH 1/10W 100K	1	
R236	ERJ6GEYG563	M.RESISTOR CH 1/10W 56K	1	
R237	ERJ6GEYJ824	M.RESISTOR CH 1/10W 820K	1	
R238	ERJ6GEYJ102	M.RESISTOR CH 1/10W 1K	1	
R239	ERJ6GEYJ103	M.RESISTOR CH 1/10W 10K	1	
R240	ERJ6GEYJ222	M.RESISTOR CH 1/10W 2.2K	1	
R241	ERJ6GEYJ104	M.RESISTOR CH 1/10W 100K	1	
R242	ERJ6GEYJ334	M.RESISTOR CH 1/10W 330K	1	
R243	ERJ6GEYJ101	M.RESISTOR CH 1/10W 100	1	
R244,45	ERJ6GEYJ103	M.RESISTOR CH 1/10W 10K	2	
R246	ERJ6GEYJ102	M.RESISTOR CH 1/10W 1K	1	
R247	ERJ6GEYJ103	M.RESISTOR CH 1/10W 10K	1	
R248	ERJ6GEYJ562	M.RESISTOR CH 1/10W 5.6K	1	
R249	ERJ6GEYJ392	M.RESISTOR CH 1/10W 3.9K	1	
R250	ERJ6GEYJ184	M.RESISTOR CH 1/10W 180K	1	
R251	ERJ6GEYJ224	M.RESISTOR CH 1/10W 220K	1	
R252	ERJ6GEYJ153	M.RESISTOR CH 1/10W 15K	1	
R253	ERJ6GEYJ564	M.RESISTOR CH 1/10W 560K	1	
R254-58	ERJ6GEYJ103	M.RESISTOR CH 1/10W 10K	5	
R259	ERJ6GEYG223	M.RESISTOR CH 1/10W 22K	1	
R260	ERJ6GEYJ393	M.RESISTOR CH 1/10W 39K	1	
R261	ERJ6GEYJ823	M.RESISTOR CH 1/10W 82K	1	
R262	ERJ6GEYJ123	M.RESISTOR CH 1/10W 12K	1	
R263	ERJ6GEYJ183	M.RESISTOR CH 1/10W 18K	1	
R264	ERJ6GEYJ333	M.RESISTOR CH 1/10W 33K	1	
R265	ERJ6GEYJ683	M.RESISTOR CH 1/10W 68K	1	
R266-69	ERJ6GEYG563	M.RESISTOR CH 1/10W 56K	4	
R270	ERJ6GEYJ562	M.RESISTOR CH 1/10W 5.6K	1	
R271	ERJ6GEYJ103	M.RESISTOR CH 1/10W 10K	1	
R273	ERJ6GEYJ393	M.RESISTOR CH 1/10W 39K	1	
R274	ERJ6GEYJ181	M.RESISTOR CH 1/10W 180	1	
R275	ERJ6GEYG563	M.RESISTOR CH 1/10W 56K	1	
R276,77	VRE0034E102	M.RESISTOR CH 1/10W 1K	2	
R278	ERJ6GEYJ472	M.RESISTOR CH 1/10W 4.7K	1	
R279-81	ERJ6GEYG563	M.RESISTOR CH 1/10W 56K	3	
R282	ERJ6GEYJ124	M.RESISTOR CH 1/10W 120K	1	
R283	ERJ6GEYJ103	M.RESISTOR CH 1/10W 10K	1	
R284	ERJ6GEYJ272	M.RESISTOR CH 1/10W 2.7K	1	
R285	ERJ6GEYJ122	M.RESISTOR CH 1/10W 1.2K	1	
R286,87	ERJ6GEYJ472	M.RESISTOR CH 1/10W 4.7K	2	
R288	ERJ6GEYJ473	M.RESISTOR CH 1/10W 47K	1	
R289	ERJ6GEYJ823	M.RESISTOR CH 1/10W 82K	1	
R301	ERJ6GEYG563	M.RESISTOR CH 1/10W 56K	1	
R302,03	ERJ6GEYJ103	M.RESISTOR CH 1/10W 10K	2	
R304	ERJ6GEYG563	M.RESISTOR CH 1/10W 56K	1	
R305	ERJ6GEYJ104	M.RESISTOR CH 1/10W 100K	1	
R306	ERJ6GEYJ683	M.RESISTOR CH 1/10W 68K	1	
R307	ERJ6GEYG223	M.RESISTOR CH 1/10W 22K	1	
R308	ERJ6GEYJ103	M.RESISTOR CH 1/10W 10K	1	
R309	ERJ6GEYJ101	M.RESISTOR CH 1/10W 100	1	
R310	ERJ6GEYJ822	M.RESISTOR CH 1/10W 8.2K	1	
R311	ERJ6GEYJ392	M.RESISTOR CH 1/10W 3.9K	1	
R312	ERJ6GEYJ153	M.RESISTOR CH 1/10W 15K	1	
R313	ERJ6GEYJ332	M.RESISTOR CH 1/10W 3.3K	1	
R314	ERJ6GEYJ151	M.RESISTOR CH 1/10W 150	1	
R315,16	ERJ6GEYJ103	M.RESISTOR CH 1/10W 10K	2	
R317	ERJ6GEYJ683	M.RESISTOR CH 1/10W 68K	1	
R318	ERJ6GEYJ103	M.RESISTOR CH 1/10W 10K	1	
R319	ERJ6GEYJ273	M.RESISTOR CH 1/10W 27K	1	
R320	ERJ6GEYJ104	M.RESISTOR CH 1/10W 100K	1	
R321	ERJ6GEYG223	M.RESISTOR CH 1/10W 22K	1	
R322	ERJ6GEYG563	M.RESISTOR CH 1/10W 56K	1	
R325,26	VRE0034E332	M.RESISTOR CH 1/10W 3.3K	2	
R327	ERJ6GEYG223	M.RESISTOR CH 1/10W 22K	1	
R328	ERJ6GEYJ104	M.RESISTOR CH 1/10W 100K	1	
R329	ERJ6GEYJ393	M.RESISTOR CH 1/10W 39K	1	
R330	ERJ6GEYJ334	M.RESISTOR CH 1/10W 330K	1	
R331	ERJ6GEYJ474	M.RESISTOR CH 1/10W 470K	1	
R332,33	ERJ6GEYJ104	M.RESISTOR CH 1/10W 100K	2	
R334	ERJ6GEYJ105	M.RESISTOR CH 1/10W 1M	1	
R335	ERJ6GEYJ394	M.RESISTOR CH 1/10W 390K	1	
R336	ERJ6GEYJ472	M.RESISTOR CH 1/10W 4.7K	1	
R337,38	ERJ6GEYJ103	M.RESISTOR CH 1/10W 10K	2	
R339,40	VRE0034E332	M.RESISTOR CH 1/10W 3.3K	2	
R341	ERJ6GEYG223	M.RESISTOR CH 1/10W 22K	1	
R342	ERJ6GEYJ104	M.RESISTOR CH 1/10W 100K	1	
R343	ERJ6GEYJ473	M.RESISTOR CH 1/10W 47K	1	
R344	ERJ6GEYJ334	M.RESISTOR CH 1/10W 330K	1	
R345	ERJ6GEYJ474	M.RESISTOR CH 1/10W 470K	1	
R346	ERJ6GEYJ104	M.RESISTOR CH 1/10W 100K	1	
R347	ERJ6GEYJ105	M.RESISTOR CH 1/10W 1M	1	
R348	ERJ6GEYJ684	M.RESISTOR CH 1/10W 680K	1	
R349,50	ERJ6GEYJ103	M.RESISTOR CH 1/10W 10K	2	
R351	ERJ6GEYJ472	M.RESISTOR CH 1/10W 4.7K	1	
R352-55	ERJ6GEYJ103	M.RESISTOR CH 1/10W 10K	4	
R356	ERJ6GEYJ222	M.RESISTOR CH 1/10W 2.2K	1	
R357	ERJ6GEYG223	M.RESISTOR CH 1/10W 22K	1	
R358	ERJ6GEYJ104	M.RESISTOR CH 1/10W 100K	1	

Ref.No.		Part No.	Part Name & Description	Pcs	Remarks
R359,60		ERJ6GEYJ103	M.RESISTOR CH 1/10W 10K	2	
R362,63		ERJ6GEYJ103	M.RESISTOR CH 1/10W 10K	2	
R365		ERJ6GEYJ104	M.RESISTOR CH 1/10W 100K	1	
R366		ERJ6GEYJ103	M.RESISTOR CH 1/10W 10K	1	
R367,68		ERJ6GEYG563	M.RESISTOR CH 1/10W 56K	2	
R369		ERJ6GEYJ104	M.RESISTOR CH 1/10W 100K	1	
R370,71		ERJ6GEYJ103	M.RESISTOR CH 1/10W 10K	2	
R373,74		ERJ6GEYJ103	M.RESISTOR CH 1/10W 10K	2	
R376		ERJ6GEYJ104	M.RESISTOR CH 1/10W 100K	1	
R378,79		ERJ6GEYG563	M.RESISTOR CH 1/10W 56K	2	
R380		ERJ6GEYJ103	M.RESISTOR CH 1/10W 10K	1	
R381		ERJ6GEYJ473	M.RESISTOR CH 1/10W 47K	1	
R382		ERJ6GEYJ683	M.RESISTOR CH 1/10W 68K	1	
R383		ERJ6GEYJ152	M.RESISTOR CH 1/10W 1.5K	1	
R386		ERJ6GEYJ182	M.RESISTOR CH 1/10W 1.8K	1	
R388		ERJ6GEYJ273	M.RESISTOR CH 1/10W 27K	1	
R389		ERJ6GEYJ153	M.RESISTOR CH 1/10W 15K	1	
R390		ERJ6GEYJ273	M.RESISTOR CH 1/10W 27K	1	
R391		ERJ6GEYJ153	M.RESISTOR CH 1/10W 15K	1	
R392,93		ERJ6GEYJ103	M.RESISTOR CH 1/10W 10K	2	
R394,95		VRB0034E102	M.RESISTOR CH 1/10W 1K	2	
R396,97		VRB0034E472	M.RESISTOR CH 1/10W 4.7K	2	
R398		ERJ6GEYJ183	M.RESISTOR CH 1/10W 18K	1	
R424		ERJ6GEYJ222	M.RESISTOR CH 1/10W 2.2K	1	
R427		ERJ6GEYJ333	M.RESISTOR CH 1/10W 33K	1	
R428		ERJ6GEYG223	M.RESISTOR CH 1/10W 22K	1	
R432,33		ERJ6GEYJ393	M.RESISTOR CH 1/10W 39K	2	
R435		ERJ6GEYJ103	M.RESISTOR CH 1/10W 10K	1	
R437		ERJ6GEYJ684	M.RESISTOR CH 1/10W 680K	1	
R440		ERJ6GEYJ562	M.RESISTOR CH 1/10W 5.6K	1	
R442		ERJ6GEYJ105	M.RESISTOR CH 1/10W 1M	1	
R443		ERJ6GEYG223	M.RESISTOR CH 1/10W 22K	1	
R445		ERJ6GEY0R00	M.RESISTOR CH 1/10W 0	1	
R446,47		ERJ6GEYJ562	M.RESISTOR CH 1/10W 5.6K	2	
R448,49		ERJ6GEYJ105	M.RESISTOR CH 1/10W 1M	2	
R460		ERJ6GEYJ103	M.RESISTOR CH 1/10W 10K	1	
R461		ERJ6GEY0R00	M.RESISTOR CH 1/10W 0	1	
R462		ERJ6GEYG223	M.RESISTOR CH 1/10W 22K	1	
R463,64		ERJ6GEYJ331	M.RESISTOR CH 1/10W 330	2	
R465		ERJ6GEYG223	M.RESISTOR CH 1/10W 22K	1	
R466		ERJ6GEYJ103	M.RESISTOR CH 1/10W 10K	1	
R467		ERJ6GEYJ473	M.RESISTOR CH 1/10W 47K	1	
R470		ERJ6GEYJ394	M.RESISTOR CH 1/10W 390K	1	
R496		ERJ6GEYJ564	M.RESISTOR CH 1/10W 560K	1	
R501		ERJ6GEYJ102	M.RESISTOR CH 1/10W 1K	1	
R502		ERJ6GEYJ103	M.RESISTOR CH 1/10W 10K	1	
R503		ERJ6GEYJ102	M.RESISTOR CH 1/10W 1K	1	
R504-07		ERJ6GEYJ821	M.RESISTOR CH 1/10W 820	4	
R508		ERJ6GEYJ473	M.RESISTOR CH 1/10W 47K	1	
R509-12		ERJ6GEYJ391	M.RESISTOR CH 1/10W 390	4	
R513		ERJ6GEYJ103	M.RESISTOR CH 1/10W 10K	1	
R514		ERJ6GEYJ224	M.RESISTOR CH 1/10W 220K	1	
R515		ERJ6GEYJ273	M.RESISTOR CH 1/10W 27K	1	
R516		ERJ6GEYJ103	M.RESISTOR CH 1/10W 10K	1	
R517		ERJ6GEYJ272	M.RESISTOR CH 1/10W 2.7K	1	
R518		ERJ6GEYJ104	M.RESISTOR CH 1/10W 100K	1	
R519		ERJ6GEYJ392	M.RESISTOR CH 1/10W 3.9K	1	
R520		ERJ6GEYJ333	M.RESISTOR CH 1/10W 33K	1	
R521,22		ERJ6GEYJ224	M.RESISTOR CH 1/10W 220K	2	
R523		ERX12SJR47	M.RESISTOR 1/2W 0.47	1	
R524		ERJ6GEYJ273	M.RESISTOR CH 1/10W 27K	1	
R525		ERJ6GEYJ272	M.RESISTOR CH 1/10W 2.7K	1	
R526		ERJ6GEYJ103	M.RESISTOR CH 1/10W 10K	1	
R527		ERJ6GEYJ104	M.RESISTOR CH 1/10W 100K	1	
R528		ERJ6GEYJ224	M.RESISTOR CH 1/10W 220K	1	
R529		ERJ6GEYJ392	M.RESISTOR CH 1/10W 3.9K	1	
R530		ERJ6GEYG223	M.RESISTOR CH 1/10W 22K	1	
R531		ERJ6GEYJ224	M.RESISTOR CH 1/10W 220K	1	
R532		ERX12SJR68	M.RESISTOR 1/2W 0.68	1	
R533		ERJ6GEYJ224	M.RESISTOR CH 1/10W 220K	1	
R534		ERJ6GEYJ273	M.RESISTOR CH 1/10W 27K	1	
R535		ERJ6GEYJ103	M.RESISTOR CH 1/10W 10K	1	
R536		ERJ6GEYJ104	M.RESISTOR CH 1/10W 100K	1	
R537		ERX12SJR47	M.RESISTOR 1/2W 0.47	1	
R538-40		ERJ6GEYJ224	M.RESISTOR CH 1/10W 220K	3	

Ref.No.		Part No.	Part Name & Description	Pcs	Remarks
R541		ERJ6GEYJ272	M.RESISTOR CH 1/10W 2.7K	1	
R542		ERJ6GEYG223	M.RESISTOR CH 1/10W 22K	1	
R543		ERJ6GEYJ273	M.RESISTOR CH 1/10W 27K	1	
R544		ERJ6GEYJ104	M.RESISTOR CH 1/10W 100K	1	
R545		ERJ6GEYJ103	M.RESISTOR CH 1/10W 10K	1	
R546		ERX12SJR47	M.RESISTOR 1/2W 0.47	1	
R547-49		ERJ6GEYJ224	M.RESISTOR CH 1/10W 220K	3	
R550		ERJ6GEYJ272	M.RESISTOR CH 1/10W 2.7K	1	
R551		ERJ6GEYG223	M.RESISTOR CH 1/10W 22K	1	
R553		ERJ6GEY0R00	M.RESISTOR CH 1/10W 0	1	
R554		ERJ6GEYJ272	M.RESISTOR CH 1/10W 2.7K	1	
R555-57		ERJ6GEY0R00	M.RESISTOR CH 1/10W 0	3	
R600		ERJ6GEYJ271	M.RESISTOR CH 1/10W 270	1	
R601		ERJ6GEYJ105	M.RESISTOR CH 1/10W 1M	1	
R603		ERJ6GEYJ271	M.RESISTOR CH 1/10W 270	1	
R604		ERJ6GEYJ105	M.RESISTOR CH 1/10W 1M	1	
SW1,W2		VSR0032	VOLTAGE SELECT SWITCH	2	
SW3		VSS0126	SWITCH	1	
TP3-P7		VJR0646	TEST POINT	5	
TP13		VJR0646	TEST POINT	1	
TP15-17		VJR0646	TEST POINT	3	
TP19,20		VJR0646	TEST POINT	2	
TP102-05		VJR0646	TEST POINT	4	
TP108-18		VJR0646	TEST POINT	11	
TP201,02		VJR0646	TEST POINT	2	
TP302-04		VJR0646	TEST POINT	3	
TP306		VJR0646	TEST POINT	1	
TP309-12		VJR0646	TEST POINT	4	
TPG1-G3		VJR0646	TEST POINT	3	
VC101		ECV1ZW30X53	V.CAPACITOR 30P	1	
VR1		VRV0109B503	V.RESISTOR 50K	1	
VR3		VRV0109B203	V.RESISTOR 20K	1	
VR101		VRV0109B203	V.RESISTOR 20K	1	
VR102		VRV0109B103	V.RESISTOR 10K	1	
VR103		VRV0109B203	V.RESISTOR 20K	1	
VR104		VRV0109B502	V.RESISTOR 5K	1	
VR105		VRV0109B104	V.RESISTOR 100K	1	
VR301		VRV0109B502	V.RESISTOR 5K	1	
VR302,03		VRV0109B202	V.RESISTOR 2K	2	
VR304-07		VRV0109B503	V.RESISTOR 50K	4	
VR308		VRV0109B202	V.RESISTOR 2K	1	
VR309		VRV0109B503	V.RESISTOR 50K	1	
X101		VSX0217	CRYSTAL OSCILLATOR	1	
X501		VSX0136	CRYSTAL OSCILLATOR	1	
X600		VSX0126	CRYSTAL OSCILLATOR	1	
X601		VSX0086	CRYSTAL OSCILLATOR	1	
			MISCELLANEOUS		
		VML2143	CARD PULLER	1	
		VML2144	CARD PULLER	1	
		VMZ1547	BARRIER	1	
		VSC2286	SHIELD CASE	1	
		VXA3966	P.C.B. SHIELD PLATE	1	
		XYNV3+K6FR	SCREW	5	

Ref.No.		Part No.	Part Name & Description	Pcs	Remarks
	■	VEP82061F	P.C.BOARD W/COMPONENT		FOR AU-63H
			W5 SERVO		
			CAPACITORS		
C1		ECQM1H273JF	P.CAPACITOR 50V 0.027U	1	
C2		ECUM1H152JN	C.CAPACITOR CH 50V 1500P	1	
C3,C4		ECUM1H101JCN	C.CAPACITOR CH 50V 100P	2	
C5		ECEA1CU100	E.CAPACITOR 16V 10U	1	
C6		ECEAOJU101	E.CAPACITOR 6.3V 100U	1	
C7		ECEA1AU470	E.CAPACITOR 10V 47U	1	
C8		ECUM1H103ZFN	C.CAPACITOR CH 50V 0.01U	1	
C9		ECQM1H154JF	P.CAPACITOR 50V 0.15U	1	
C10		ECEA1HN2R2S	E.CAPACITOR 50V 2.2U	1	
C11		ECQM1H223JF	P.CAPACITOR 50V 0.022U	1	
C13		ECQP1H822JZ	P.CAPACITOR 50V 8200P	1	
C14		ECQM1H682JV	P.CAPACITOR 50V 6800P	1	
C15,16		ECUM1H103ZFN	C.CAPACITOR CH 50V 0.01U	2	
C17		ECQM1H394JV	P.CAPACITOR 50V 0.39U	1	
C18		ECEA1HU4R7	E.CAPACITOR 50V 4.7U	1	
C19		ECEA1AU470	E.CAPACITOR 10V 47U	1	
C20,21		ECUM1H103ZFN	C.CAPACITOR CH 50V 0.01U	2	
C22		ECEA1HU2R2	E.CAPACITOR 50V 2.2U	1	
C23,24		ECUM1E104ZFN	C.CAPACITOR CH 25V 0.1U	2	
C25		ECUM1H103ZFN	C.CAPACITOR CH 50V 0.01U	1	
C26		ECEA1AU470	E.CAPACITOR 10V 47U	1	
C27		ECUM1H103ZFN	C.CAPACITOR CH 50V 0.01U	1	
C28		ECEA1AU470	E.CAPACITOR 10V 47U	1	
C29		ECEA1AU330	E.CAPACITOR 10V 33U	1	
C30		ECUM1H103ZFN	C.CAPACITOR CH 50V 0.01U	1	
C31		ECEA1AU330	E.CAPACITOR 10V 33U	1	
C32		ECEA1AU470	E.CAPACITOR 10V 47U	1	
C33		ECUM1H103ZFN	C.CAPACITOR CH 50V 0.01U	1	
C34		ECEA1AU470	E.CAPACITOR 10V 47U	1	
C39		ECUM1H331JCN	C.CAPACITOR CH 50V 330P	1	
C40-42		ECUM1H103ZFN	C.CAPACITOR CH 50V 0.01U	3	
C43		ECUM1H101JCN	C.CAPACITOR CH 50V 100P	1	
C46		ECEA1CU470	E.CAPACITOR 16V 47U	1	
C47,48		ECUM1E104ZFN	C.CAPACITOR CH 25V 0.1U	2	
C101		ECQM1H104JF	P.CAPACITOR 50V 0.1U	1	
C102		ECUM1H151JCN	C.CAPACITOR CH 50V 150P	1	
C103		ECEA1CU470	E.CAPACITOR 16V 47U	1	
C104		ECEA1HU2R2	E.CAPACITOR 50V 2.2U	1	
C105		ECEA1CU101	E.CAPACITOR 16V 100U	1	
C106		ECQM1H104JF	P.CAPACITOR 50V 0.1U	1	
C107		ECUM1H151JCN	C.CAPACITOR CH 50V 150P	1	
C108		ECUM1H102JCN	C.CAPACITOR CH 50V 1000P	1	
C109		ECUM1H221JCN	C.CAPACITOR CH 50V 220P	1	
C110		ECQM1H103JF	P.CAPACITOR 50V 0.01U	1	
C111		ECEA1HU010	E.CAPACITOR 50V 1U	1	
C112		ECQM1H154JF	P.CAPACITOR 50V 0.15U	1	
C113		ECEA1HU010	E.CAPACITOR 50V 1U	1	
C114		ECEA1CU470	E.CAPACITOR 16V 47U	1	
C115		ECUM1H103ZFN	C.CAPACITOR CH 50V 0.01U	1	
C116		ECEA1CU470	E.CAPACITOR 16V 47U	1	
C117		ECUM1H103ZFN	C.CAPACITOR CH 50V 0.01U	1	
C118		ECEA1CU470	E.CAPACITOR 16V 47U	1	
C119		ECUM1H103ZFN	C.CAPACITOR CH 50V 0.01U	1	
C120		ECEA1CU470	E.CAPACITOR 16V 47U	1	
C121		ECUM1H103ZFN	C.CAPACITOR CH 50V 0.01U	1	
C122		ECEA1CU470	E.CAPACITOR 16V 47U	1	
C123		ECUM1H330JCN	C.CAPACITOR CH 50V 33P	1	
C124		ECUM1H103ZFN	C.CAPACITOR CH 50V 0.01U	1	
C125		ECEA1CU470	E.CAPACITOR 16V 47U	1	
C126		ECQM1H562JF	P.CAPACITOR 50V 5600P	1	
C127		ECQM1H393JF	P.CAPACITOR 50V 0.039U	1	
C128		ECQM1H104JF	P.CAPACITOR 50V 0.1U	1	
C129		ECEA1CM22	E.CAPACITOR 10V 22U	1	
C130		ECEA1HU010	E.CAPACITOR 50V 1U	1	
C131		ECEA1EN220S	E.CAPACITOR 25V 22U	1	

Ref.No.		Part No.	Part Name & Description	Pcs	Remarks
C132		ECQM1H103JF	P.CAPACITOR 50V 0.01U	1	
C133-36		ECUM1H103ZFN	C.CAPACITOR CH 50V 0.01U	4	
C137		ECEA1CU101	E.CAPACITOR 16V 100U	1	
C139		ECQM1H822JF	P.CAPACITOR 50V 8200P	1	
C140		ECUM1H102JCN	C.CAPACITOR CH 50V 1000P	1	
C141		ECEA1HN010S	E.CAPACITOR 50V 1U	1	
C143		ECEA1CU470	E.CAPACITOR 16V 47U	1	
C145		ECEA1AU470	E.CAPACITOR 10V 47U	1	
C146		ECUM1H103ZFN	C.CAPACITOR CH 50V 0.01U	1	
C147		ECEA1HUR47	E.CAPACITOR 50V 0.47U	1	
C148		ECEA1CU470	E.CAPACITOR 16V 47U	1	
C149,50		ECUM1H103ZFN	C.CAPACITOR CH 50V 0.01U	2	
C151		ECEA1HN010S	E.CAPACITOR 50V 1U	1	
C152,53		ECUM1H103ZFN	C.CAPACITOR CH 50V 0.01U	2	
C154		ECUM1H152KBN	C.CAPACITOR CH 50V 1500P	1	
C155		ECEA1HN100S	E.CAPACITOR 50V 10U	1	
C156		ECEA1HUR47	E.CAPACITOR 50V 0.47U	1	
C157,58		ECUM1H103ZFN	C.CAPACITOR CH 50V 0.01U	2	
C159		ECQM1H104JF	P.CAPACITOR 50V 0.1U	1	
C160		ECUM1H103ZFN	C.CAPACITOR CH 50V 0.01U	1	
C161		ECQM1H104JF	P.CAPACITOR 50V 0.1U	1	
C162,63		ECQM1H103JF	P.CAPACITOR 50V 0.01U	2	
C164		ECEA1HU4R7	E.CAPACITOR 50V 4.7U	1	
C165-67		ECUM1H103ZFN	C.CAPACITOR CH 50V 0.01U	3	
C168		ECEA1EU100	E.CAPACITOR 25V 10U	1	
C169		ECQM1H103JF	P.CAPACITOR 50V 0.01U	1	
C170		ECUM1H471JCN	C.CAPACITOR CH 50V 470P	1	
C171,72		ECUM1H103ZFN	C.CAPACITOR CH 50V 0.01U	2	
C173		ECUM1H101JCN	C.CAPACITOR CH 50V 100P	1	
C174		ECUM1H103ZFN	C.CAPACITOR CH 50V 0.01U	1	
C175		ECEA1HUZR2	E.CAPACITOR 50V 2.2U	1	
C176		ECEA1CU470	E.CAPACITOR 16V 47U	1	
C177		ECQM1H222JF	P.CAPACITOR 50V 2200P	1	
C179		ECUM1H221JCN	C.CAPACITOR CH 50V 220P	1	
C301		ECEA1AU330	E.CAPACITOR 10V 33U	1	
C302		ECUM1H103ZFN	C.CAPACITOR CH 50V 0.01U	1	
C303		ECQM1H562JF	P.CAPACITOR 50V 5600P	1	
C304		ECQM1H392JF	P.CAPACITOR 50V 3900P	1	
C305		ECUM1H103ZFN	C.CAPACITOR CH 50V 0.01U	1	
C306		ECQM1H123JF	P.CAPACITOR 50V 0.012U	1	
C307		ECEA1CN470S	E.CAPACITOR 16V 47U	1	
C308		ECEAOJU221	E.CAPACITOR 6.3V 220U	1	
C309		ECEA1HUZR2	E.CAPACITOR 50V 2.2U	1	
C310		ECQM1H104JF	P.CAPACITOR 50V 0.1U	1	
C311		ECUM1H153KBN	C.CAPACITOR CH 50V 0.015U	1	
C312		ECEA1HN010S	E.CAPACITOR 50V 1U	1	
C313,14		ECUM1H103ZFN	C.CAPACITOR CH 50V 0.01U	2	
C315		ECQM1H104JF	P.CAPACITOR 50V 0.1U	1	
C316		ECUM1E273KBN	C.CAPACITOR CH 25V 0.027U	1	
C317		ECEA1HN2R2S	E.CAPACITOR 50V 2.2U	1	
C318-20		ECUM1H103ZFN	C.CAPACITOR CH 50V 0.01U	3	
C321		ECEA1CU100	E.CAPACITOR 16V 10U	1	
C322		ECEAOJU470	E.CAPACITOR 6.3V 47U	1	
C323		ECUM1H103ZFN	C.CAPACITOR CH 50V 0.01U	1	
C324		ECEAOJU471	E.CAPACITOR 6.3V 470U	1	
C327		ECEA1HU2R2	E.CAPACITOR 50V 2.2U	1	
C330-36		ECUM1H103ZFN	C.CAPACITOR CH 50V 0.01U	7	
C338		ECEA1CU100	E.CAPACITOR 16V 10U	1	
C342		ECQM1H104JF	P.CAPACITOR 50V 0.1U	1	
C401-03		ECUM1H103ZFN	C.CAPACITOR CH 50V 0.01U	3	
C406-10		ECUM1H103ZFN	C.CAPACITOR CH 50V 0.01U	5	
C454		ECUM1H103ZFN	C.CAPACITOR CH 50V 0.01U	1	
C492		ECUM1H103ZFN	C.CAPACITOR CH 50V 0.01U	1	
C495,96		ECUM1H103ZFN	C.CAPACITOR CH 50V 0.01U	2	
C501		ECUM1H103ZFN	C.CAPACITOR CH 50V 0.01U	1	
C502		ECEA1CU470	E.CAPACITOR 16V 47U	1	
C503		ECEA1ESS471	E.CAPACITOR 25V 470U	1	
C504		ECUM1E473KBN	C.CAPACITOR CH 25V 0.047U	1	
C505		ECUM1H561JCN	C.CAPACITOR CH 50V 560P	1	
C506		ECUM1H820JCN	C.CAPACITOR CH 50V 82P	1	
C507		ECUM1H561JCN	C.CAPACITOR CH 50V 560P	1	
C508		ECEA1HU010	E.CAPACITOR 50V 1U	1	
C509-13		ECEA1ESS101	E.CAPACITOR 25V 100U	5	
C514		ECQM1H104JF	P.CAPACITOR 50V 0.1U	1	
C515		ECEA1EU4R7	E.CAPACITOR 25V 4.7U	1	

Ref.No.	Part No.	Part Name & Description	Pcs	Remarks
C516-18	ECEA1HN4R7S	E.CAPACITOR 50V 4.7U	3	
C519	ECEA1HU010	E.CAPACITOR 50V 1U	1	
C520-22	ECUM1H103KBN	C.CAPACITOR CH 50V 0.01U	3	
C523	ECQM1H104JF	P.CAPACITOR 50V 0.1U	1	
C524	ECEA1EU4R7	E.CAPACITOR 25V 4.7U	1	
C525,26	ECEA1HN4R7S	E.CAPACITOR 50V 4.7U	2	
C527	ECQM1H104JF	P.CAPACITOR 50V 0.1U	1	
C528	ECEA1HU010	E.CAPACITOR 50V 1U	1	
C529-31	ECUM1H103KBN	C.CAPACITOR CH 50V 0.01U	3	
C532	ECEA1EU4R7	E.CAPACITOR 25V 4.7U	1	
C533,34	ECEA1HN4R7S	E.CAPACITOR 50V 4.7U	2	
C535	ECQB1H224JF	P.CAPACITOR 50V 0.22U	1	
C536	ECEA1HU010	E.CAPACITOR 50V 1U	1	
C537-39	ECUM1H103KBN	C.CAPACITOR CH 50V 0.01U	3	
C540	ECEA1EU4R7	E.CAPACITOR 25V 4.7U	1	
C541-43	ECEA1HN4R7S	E.CAPACITOR 50V 4.7U	3	
C544	ECQB1H224JF	P.CAPACITOR 50V 0.22U	1	
C545	ECEA1HU010	E.CAPACITOR 50V 1U	1	
C546-48	ECUM1H103KBN	C.CAPACITOR CH 50V 0.01U	3	
C549	ECEA1AU470	E.CAPACITOR 10V 47U	1	
C550	ECUM1E473KBN	C.CAPACITOR CH 25V 0.047U	1	
C551	ECEA1HN4R7S	E.CAPACITOR 50V 4.7U	1	
C552	ECQM1H104JF	P.CAPACITOR 50V 0.1U	1	
C553	ECEA1HN4R7S	E.CAPACITOR 50V 4.7U	1	
C558-63	ECQM1H104JF	P.CAPACITOR 50V 0.1U	6	
C600	ECUM1H680JCN	C.CAPACITOR CH 50V 68P	1	
C601	ECUM1H050DCN	C.CAPACITOR CH 50V 50P	1	
C602	ECUM1H680JCN	C.CAPACITOR CH 50V 68P	1	
C603	ECUM1H050DCN	C.CAPACITOR CH 50V 50P	1	
C700	ECUM1H101JCN	C.CAPACITOR CH 50V 100P	1	
C701	ECQM1H104JF	P.CAPACITOR 50V 0.1U	1	
C702	ECUM1H103ZFN	C.CAPACITOR CH 50V 0.01U	1	
C703	ECEA1HN4R7S	E.CAPACITOR 50V 4.7U	1	
C704	ECUM1H103ZFN	C.CAPACITOR CH 50V 0.01U	1	
C705	ECQM1H682JF	P.CAPACITOR 50V 6800P	1	
C706-08	ECUM1H103ZFN	C.CAPACITOR CH 50V 0.01U	3	
C709	ECQP1H151JZ	P.CAPACITOR 50V 150P	1	
C710,11	ECUM1H103ZFN	C.CAPACITOR CH 50V 0.01U	2	
C712,13	ECQP1H151JZ	P.CAPACITOR 50V 150P	2	
C714-19	ECUM1H103ZFN	C.CAPACITOR CH 50V 0.01U	6	
C720	ECEA1CU220	E.CAPACITOR 16V 22U	1	
C721	ECQM1H122JF	P.CAPACITOR 50V 1200P	1	
C722	ECUM1H103ZFN	C.CAPACITOR CH 50V 0.01U	1	
C723	ECUM1H470JCN	C.CAPACITOR CH 50V 47P	1	
C724	ECUM1H180JCN	C.CAPACITOR CH 50V 18P	1	
C725	ECUM1H103ZFN	C.CAPACITOR CH 50V 0.01U	1	
C726	ECEA1CU330	E.CAPACITOR 16V 33U	1	
C727	ECQM1H124JF	P.CAPACITOR 50V 0.12U	1	
C728,29	ECUM1H103ZFN	C.CAPACITOR CH 50V 0.01U	2	
C730-32	ECUM1H472KBN	C.CAPACITOR CH 50V 4700P	3	
C733	ECQM1H124JF	P.CAPACITOR 50V 0.12U	1	
C734,35	ECUM1H103ZFN	C.CAPACITOR CH 50V 0.01U	2	
C736	ECQM1H182JF	P.CAPACITOR 50V 1800P	1	
C737	ECEA1HUR33	E.CAPACITOR 50V 0.33U	1	
C738	ECUM1H103ZFN	C.CAPACITOR CH 50V 0.01U	1	
C739	ECEA1CU100	E.CAPACITOR 16V 10U	1	
C740	ECEA1HUR33	E.CAPACITOR 50V 0.33U	1	
C741	ECUM1H103ZFN	C.CAPACITOR CH 50V 0.01U	1	
C742	ECEA1CU100	E.CAPACITOR 16V 10U	1	
C743	ECEA1HUR33	E.CAPACITOR 50V 0.33U	1	
C744	ECUM1H103ZFN	C.CAPACITOR CH 50V 0.01U	1	
C745	ECEA1CU100	E.CAPACITOR 16V 10U	1	
C746,47	ECEA1AU330	E.CAPACITOR 10V 33U	2	
C748	ECEA1HUR33	E.CAPACITOR 50V 0.33U	1	
C749	ECUM1H103ZFN	C.CAPACITOR CH 50V 0.01U	1	
C750	ECEA1CU100	E.CAPACITOR 16V 10U	1	
C751	ECUM1H103KBN	C.CAPACITOR CH 50V 0.01U	1	
C752	ECUM1H330JCN	C.CAPACITOR CH 50V 33P	1	
C753,54	ECEA1AU330	E.CAPACITOR 10V 33U	2	
C755	ECUM1H103KBN	C.CAPACITOR CH 50V 0.01U	1	
C756	ECUM1H103ZFN	C.CAPACITOR CH 50V 0.01U	1	
C757	ECUM1H271JCN	C.CAPACITOR CH 50V 270P	1	
C758	ECUM1H103ZFN	C.CAPACITOR CH 50V 0.01U	1	
C759	ECUM1H103KBN	C.CAPACITOR CH 50V 0.01U	1	
C760	ECUM1H103ZFN	C.CAPACITOR CH 50V 0.01U	1	

Ref.No.	Part No.	Part Name & Description	Pcs	Remarks
C761	ECUM1H330JCN	C.CAPACITOR CH 50V 33P	1	
C762	ECUM1H271JCN	C.CAPACITOR CH 50V 270P	1	
C763,64	ECEA1AU330	E.CAPACITOR 10V 33U	2	
C765	ECUM1H103KBN	C.CAPACITOR CH 50V 0.01U	1	
C900-11	ECUM1H103ZFN	C.CAPACITOR CH 50V 0.01U	12	
D1	MA151K	DIODE	1	
D302	MA151K	DIODE	1	
D303	MA151WK	DIODE	1	
D304	MA151WA	DIODE	1	
D305	MA151K	DIODE	1	
D307	MA151WA	DIODE	1	
D309	MA151WK	DIODE	1	
D310	MA151K	DIODE	1	
D313	MA151WA	DIODE	1	
D314-17	MA151WK	DIODE	4	
D318	MA151K	DIODE	1	
D319,20	MA151WK	DIODE	2	
D321,22	MA151K	DIODE	2	
D323,24	MA151WK	DIODE	2	
D325	MA151K	DIODE	1	
D330	MA151K	DIODE	1	
D333	MA151WK	DIODE	1	
D334,35	MA151K	DIODE	2	
D337,38	MA151K	DIODE	2	
D340	MA151WA	DIODE	1	
D341	MA151K	DIODE	1	
D345,46	MA151WA	DIODE	2	
D349	MA151WK	DIODE	1	
D351	MA151K	DIODE	1	
D501	MA151K	DIODE	1	
D502	MA151WK	DIODE	1	
D503	MA153	DIODE	1	
D504	MA151WK	DIODE	1	
D505,06	MA151K	DIODE	2	
D507	MA151WK	DIODE	1	
D508,09	MA151K	DIODE	2	
D510	MA151WK	DIODE	1	
D511	MA151K	DIODE	1	
D514-17	MA701A	DIODE	4	
D572	MA151K	DIODE	1	
D700	MA151WA	DIODE	1	
D701,02	1SS101	DIODE	2	
D703	MA151K	DIODE	1	
D704-06	MA153	DIODE	3	
D707-09	LN25RP	LED	3	
D710	MA153	DIODE	1	
D711,12	MA1039	DIODE	2	
D713	MA153	DIODE	1	
D714,15	MA1039	DIODE	2	
D716-21	MA153	DIODE	6	
IC1	LM2904M	IC	1	
IC2	LM2903M	IC	1	
IC3	LM2904M	IC	1	
IC4	NJM4558M	IC	1	
IC5	MC14538BF	IC	1	
IC6	UPD65031F405	IC	1	
IC7	MN53015VZW	IC	1	
IC8	MC14049UBF	IC	1	
IC9	MC14013BF	IC	1	
IC10	MM74HC221AM	IC	1	
IC11	AN78L05	IC	1	
IC12	MC14021BF	IC	1	
IC13	MC14094BF	IC	1	
IC14	MC14053BF	IC	1	(R)
IC15	MC14049UBF	IC	1	
IC16	MC14050BF	IC	1	
IC18	MN51020VZZ	IC	1	
IC101	LM2904M	IC	1	
IC102	LM2903M	IC	1	

Ref.No.		Part No.	Part Name & Description	Pcs	Remarks
IC103		LM2904M	IC	1	
IC104		MC14538BF	IC	1	
IC105		AN79L09	IC	1	
IC106		AN78N09	IC	1	
IC107		DN74LS293S	IC	1	
IC108		MC74HC00AF	IC	1	
IC109		MN6064R	IC	1	
IC110		MN6168VIA	IC	1	
IC111		MC74HCU04F	IC	1	
IC112		MC14049UBF	IC	1	
IC113,14		LM2904M	IC	2	
D505,06		MA151K	DIODE	2	
D507		MA151WK	DIODE	1	
D508,09		MA151K	DIODE	2	
D510		MA151WK	DIODE	1	
D511		MA151K	DIODE	1	
D514-17		MA701A	DIODE	4	
D572		MA151K	DIODE	1	
D700		MA151WA	DIODE	1	
D701,02		1SS101	DIODE	2	
D703		MA151K	DIODE	1	
D704-06		MA153	DIODE	3	
D707-09		LN25RP	LED	3	
D710		MA153	DIODE	1	
D711,12		MA1039	DIODE	2	
D713		MA153	DIODE	1	
D714,15		MA1039	DIODE	2	
D716-21		MA153	DIODE	6	
IC1		LM2904M	IC	1	
IC2		LM2903M	IC	1	
IC3		LM2904M	IC	1	
IC4		NJM4558M	IC	1	
IC5		MC14538BF	IC	1	
IC6		UPD65031F405	IC	1	
IC7		MN53015VZW	IC	1	
IC8		MC14049UBF	IC	1	
IC9		MC14013BF	IC	1	
IC10		MM74HC221AM	IC	1	
IC11		AN78L05	IC	1	
IC12		MC14021BF	IC	1	
IC13		MC14094BF	IC	1	
IC14		MC14053BF	IC	1	(R)
IC15		MC14049UBF	IC	1	
IC16		MC14050BF	IC	1	
IC18		MN51020VZZ	IC	1	
IC101		LM2904M	IC	1	
IC102		LM2903M	IC	1	
IC103		LM2904M	IC	1	
IC104		MC14538BF	IC	1	
IC105		AN79L09	IC	1	
IC106		AN78N09	IC	1	
IC107		DN74LS293S	IC	1	
IC108		MC74HC00AF	IC	1	
IC109		MN6064R	IC	1	
IC110		MN6168VIA	IC	1	
IC111		MC74HCU04F	IC	1	
IC112		MC14049UBF	IC	1	
IC113,14		LM2904M	IC	2	
IC115		LM2903M	IC	1	
IC116,17		LM2904M	IC	2	
IC118-20		MC14066BF	IC	3	
IC121		MC14052BF	IC	1	
IC123		MC14053BF	IC	1	(R)
IC124		MN53030VYA	IC	1	
IC125		MN53007VYC	IC	1	
IC126		UPC4558G2	IC	1	
IC128		NJM4558M	IC	1	
IC129		MC14538BF	IC	1	
IC130		MC14013BF	IC	1	
IC131		LM2904M	IC	1	
IC132		UPC4558G2	IC	1	
IC133		MN4030BS	IC	1	

Ref.No.		Part No.	Part Name & Description	Pcs	Remarks
IC134		MC14538BF	IC	1	
IC135		MC14053BF	IC	1	(R)
IC136		MC74HC02AF	IC	1	
IC137		MC14538BF	IC	1	
IC301		AN78L05	IC	1	
IC302		LM2904M	IC	1	
IC303		LM2902M	IC	1	
IC304		MC14053BF	IC	1	(R)
IC305		MC14066BF	IC	1	
IC306		LM2904M	IC	1	
IC307		LM2902M	IC	1	
IC308,09		LM2904M	IC	2	
IC310-13		MC14066BF	IC	4	
IC314		MC14028BF	IC	1	
IC315		MC14081BF	IC	1	
IC316		NJM2901M	IC	1	
IC318		MC14538BF	IC	1	
IC319		MC14049UBF	IC	1	
IC501		BA6149LS	IC	1	
IC502		PU4213	IC	1	
IC503-06		AN3821K	IC	4	
IC600,01		MC74HCU04F	IC	2	
IC700		AN608P	IC	1	
IC701		UPC4741G	IC	1	
IC702		TL431CLP	IC	1	
IC703		MC14053BF	IC	1	(R)
IC704		UPC4558G2	IC	1	
IC705		UPC4082G	IC	1	
IC706		MC74HC157AF	IC	1	
IC707		MN18882	IC	1	
IC708		VSI0623	IC	1	
IC709		51951BML600D	IC	1	
IC710		MC14538BF	IC	1	
IC711		MSM5210RS	IC	1	
IC712		UPD65024F137	IC	1	
IC713		UPC4082G	IC	1	
IC714		UPC4558G2	IC	1	
IC715		MC14051BF	IC	1	
IC716		UPC4082G	IC	1	
IC717		UPC4741G	IC	1	
IC718		UPC4558G2	IC	1	
IC719		MC14051BF	IC	1	
IC720		MC14053BF	IC	1	(R)
IC721		AN79L05	IC	1	
IC722		AN78L05	IC	1	
IC723		AN78L09	IC	1	
IC724		AN79L09	IC	1	
IC725,26		LM2902M	IC	2	
IC727		LM2903M	IC	1	
IC800		LM2904M	IC	1	
ICS708		VJS2336A028	CONNECTOR (FEMALE)	1	
L1		VLP0017	COIL	1	
L2-L4		VLQEL05S221J	COIL 220UH	3	
L101,02		VLQEL05S221J	COIL 220UH	2	
L501		VLQ0214	COIL 50UH	1	
L504-07		VLQ0129	COIL 300UH	4	
L701		VLQEL05S101J	COIL 100UH	1	
L702		VLQ0128	COIL 47UH	1	
Q1,Q2		UN2213	TRANSISTOR-RESISTOR	2	
Q8,Q9		UN2213	TRANSISTOR-RESISTOR	2	
Q10,11		UN2213	TRANSISTOR-RESISTOR	2	
Q17		UN2213	TRANSISTOR-RESISTOR	1	
Q101		2SD601-R	TRANSISTOR CHIP	1	(Q_R)
Q102		UN2213	TRANSISTOR-RESISTOR	1	
Q103		2SJ43	TRANSISTOR	1	
Q104		UN2213	TRANSISTOR-RESISTOR	1	
Q105		2SD601-R	TRANSISTOR CHIP	1	(Q_R)
Q106-08		UN2213	TRANSISTOR-RESISTOR	3	
Q109		2SD601-R	TRANSISTOR CHIP	1	(Q_R)

Ref.No.	Part No.	Part Name & Description	Pcs	Remarks
Q110-19	UN2213	TRANSISTOR-RESISTOR	10	
Q120	2SD601-R	TRANSISTOR CHIP	1	(Q,R)
Q123,24	UN2213	TRANSISTOR-RESISTOR	2	
Q128	UN2213	TRANSISTOR-RESISTOR	1	
Q129	UN2214	TRANSISTOR-RESISTOR	1	
Q130	2SK374	TRANSISTOR	1	
Q131-33	UN2213	TRANSISTOR-RESISTOR	3	
Q134,35	2SB709-R	TRANSISTOR CHIP	2	(Q,R)
Q137-39	UN2213	TRANSISTOR-RESISTOR	3	
Q140	MA151A	DIODE	1	
Q301,02	UN2213	TRANSISTOR-RESISTOR	2	
Q303	UN2113	TRANSISTOR-RESISTOR	1	
Q304	UN2213	TRANSISTOR-RESISTOR	1	
Q305	UN2113	TRANSISTOR-RESISTOR	1	
Q306-08	UN2213	TRANSISTOR-RESISTOR	3	
Q312-14	UN2213	TRANSISTOR-RESISTOR	3	
Q316	2SD601-R	TRANSISTOR CHIP	1	(Q,R)
Q317	UN2213	TRANSISTOR-RESISTOR	1	
Q319	2SD601-R	TRANSISTOR CHIP	1	(Q,R)
Q320	UN2213	TRANSISTOR-RESISTOR	1	
Q336,37	UN2213	TRANSISTOR-RESISTOR	2	
Q340	UN2213	TRANSISTOR-RESISTOR	1	
Q343	UN2213	TRANSISTOR-RESISTOR	1	
Q346,47	UN2213	TRANSISTOR-RESISTOR	2	
Q501-04	2SB709-R	TRANSISTOR CHIP	4	(Q,R)
Q505	UN2113	TRANSISTOR-RESISTOR	1	
Q506	UN2213	TRANSISTOR-RESISTOR	1	
Q507	UN2113	TRANSISTOR-RESISTOR	1	
Q508,09	UN2213	TRANSISTOR-RESISTOR	2	
Q700	UN2113	TRANSISTOR-RESISTOR	1	
Q701-11	UN2213	TRANSISTOR-RESISTOR	11	
		RESISTORS		
R1	ERJ6GEYJ103	M.RESISTOR CH 1/10W 10K	1	
R2	ERJ6GEYJ683	M.RESISTOR CH 1/10W 68K	1	
R3	ERJ6GEYJ103	M.RESISTOR CH 1/10W 10K	1	
R4	ERJ6GEYJ105	M.RESISTOR CH 1/10W 1M	1	
R5,R6	ERJ6GEYJ103	M.RESISTOR CH 1/10W 10K	2	
R7	ERJ6GEYJ155	M.RESISTOR CH 1/10W 1M	1	
R8	ERJ6GEYJ103	M.RESISTOR CH 1/10W 10K	1	
R9	ERJ6GEYJ125	M.RESISTOR CH 1/10W 1.2M	1	
R10	ERJ6GEYG563	M.RESISTOR CH 1/10W 56K	1	
R11,12	VREO034E102	M.RESISTOR CH 1/10W 1K	2	
R13	ERJ6GEYJ123	M.RESISTOR CH 1/10W 12K	1	
R14	ERJ6GEYJ823	M.RESISTOR CH 1/10W 82K	1	
R15	ERJ6GEYJ393	M.RESISTOR CH 1/10W 39K	1	
R16	ERJ6GEYJ824	M.RESISTOR CH 1/10W 820K	1	
R17	ERJ6GEYJ822	M.RESISTOR CH 1/10W 8.2K	1	
R18	ERJ6GEYJ183	M.RESISTOR CH 1/10W 18K	1	
R19,20	ERJ6GEYJ822	M.RESISTOR CH 1/10W 8.2K	2	
R21	ERJ6GEYJ104	M.RESISTOR CH 1/10W 100K	1	
R22	ERJ6GEYJ472	M.RESISTOR CH 1/10W 4.7K	1	
R23	ERJ6GEYJ103	M.RESISTOR CH 1/10W 10K	1	
R24	ERJ6GEYG563	M.RESISTOR CH 1/10W 56K	1	
R25	ERJ6GEYJ102	M.RESISTOR CH 1/10W 1K	1	
R27	ERJ6GEYJ123	M.RESISTOR CH 1/10W 12K	1	
R28-31	ERJ6GEYG563	M.RESISTOR CH 1/10W 56K	4	
R34,35	ERJ6GEYJ103	M.RESISTOR CH 1/10W 10K	2	
R36	ERJ6GEYJ562	M.RESISTOR CH 1/10W 5.6K	1	
R37-44	ERJ6GEYG563	M.RESISTOR CH 1/10W 56K	8	
R45	ERJ6GEYJ104	M.RESISTOR CH 1/10W 100K	1	
R50	ERJ6GEYG563	M.RESISTOR CH 1/10W 56K	1	
R51	ERJ6GEYJ103	M.RESISTOR CH 1/10W 10K	1	
R52	ERJ6GEYJ474	M.RESISTOR CH 1/10W 470K	1	
R53	ERJ6GEYG563	M.RESISTOR CH 1/10W 56K	1	
R54	ERJ6GEYJ103	M.RESISTOR CH 1/10W 10K	1	
R55	ERJ6GEYJ474	M.RESISTOR CH 1/10W 470K	1	
R56	ERJ6GEYG563	M.RESISTOR CH 1/10W 56K	1	
R57	ERJ6GEYJ103	M.RESISTOR CH 1/10W 10K	1	
R58	ERJ6GEYJ474	M.RESISTOR CH 1/10W 470K	1	
R59	ERJ6GEYJ103	M.RESISTOR CH 1/10W 10K	1	
R60	ERJ6GEYJ102	M.RESISTOR CH 1/10W 1K	1	
R61	ERJ6GEYG223	M.RESISTOR CH 1/10W 22K	1	

Ref.No.	Part No.	Part Name & Description	Pcs	Remarks
R62	ERJ6GEYJ103	M.RESISTOR CH 1/10W 10K	1	
R64	ERJ6GEYJ153	M.RESISTOR CH 1/10W 15K	1	
R65	ERJ6GEYJ683	M.RESISTOR CH 1/10W 68K	1	
R69,70	ERJ6GEYJ102	M.RESISTOR CH 1/10W 1K	2	
R101	ERJ6GEYJ103	M.RESISTOR CH 1/10W 10K	1	
R102	ERJ6GEYJ184	M.RESISTOR CH 1/10W 180K	1	
R103	ERJ6GEYJ102	M.RESISTOR CH 1/10W 1K	1	
R104	ERJ6GEYJ474	M.RESISTOR CH 1/10W 470K	1	
R105-07	ERJ6GEYJ103	M.RESISTOR CH 1/10W 10K	3	
R108	ERJ6GEYJ184	M.RESISTOR CH 1/10W 180K	1	
R109	ERJ6GEYJ102	M.RESISTOR CH 1/10W 1K	1	
R110	ERJ6GEYJ474	M.RESISTOR CH 1/10W 470K	1	
R111	ERJ6GEYJ103	M.RESISTOR CH 1/10W 10K	1	
R112	ERJ6GEYJ153	M.RESISTOR CH 1/10W 15K	1	
R113	ERJ6GEYJ562	M.RESISTOR CH 1/10W 5.6K	1	
R114	ERJ6GEYJ224	M.RESISTOR CH 1/10W 220K	1	
R115	ERJ6GEYJ682	M.RESISTOR CH 1/10W 6.8K	1	
R116	ERJ6GEYJ153	M.RESISTOR CH 1/10W 15K	1	
R117	ERJ6GEYJ104	M.RESISTOR CH 1/10W 100K	1	
R118	ERJ6GEYJ103	M.RESISTOR CH 1/10W 10K	1	
R119	ERJ6GEYJ153	M.RESISTOR CH 1/10W 15K	1	
R120-22	ERJ6GEYJ103	M.RESISTOR CH 1/10W 10K	3	
R123	ERJ6GEYJ105	M.RESISTOR CH 1/10W 1M	1	
R124	ERJ6GEYJ272	M.RESISTOR CH 1/10W 2.7K	1	
R125	ERJ6GEYJ103	M.RESISTOR CH 1/10W 10K	1	
R126-32	ERJ6GEYG563	M.RESISTOR CH 1/10W 56K	7	
R133,34	ERJ6GEYJ103	M.RESISTOR CH 1/10W 10K	2	
R135,36	ERJ6GEYG563	M.RESISTOR CH 1/10W 56K	2	
R137	ERJ6GEYJ103	M.RESISTOR CH 1/10W 10K	1	
R138	ERJ6GEYG563	M.RESISTOR CH 1/10W 56K	1	
R139	ERJ6GEYJ224	M.RESISTOR CH 1/10W 220K	1	
R140	ERJ6GEYG563	M.RESISTOR CH 1/10W 56K	1	
R141	ERJ6GEYJ224	M.RESISTOR CH 1/10W 220K	1	
R142	ERJ6GEYG563	M.RESISTOR CH 1/10W 56K	1	
R143	ERJ6GEYG223	M.RESISTOR CH 1/10W 22K	1	
R144	ERJ6GEYJ103	M.RESISTOR CH 1/10W 10K	1	
R145	ERJ6GEYG563	M.RESISTOR CH 1/10W 56K	1	
R146	ERJ6GEYJ562	M.RESISTOR CH 1/10W 5.6K	1	
R147,48	ERJ6GEYJ273	M.RESISTOR CH 1/10W 27K	2	
R149	ERJ6GEYJ104	M.RESISTOR CH 1/10W 100K	1	
R150	ERJ6GEYJ183	M.RESISTOR CH 1/10W 18K	1	
R151	ERJ6GEYJ103	M.RESISTOR CH 1/10W 10K	1	
R152	ERJ6GEYJ824	M.RESISTOR CH 1/10W 820K	1	
R153	ERJ6GEYJ562	M.RESISTOR CH 1/10W 5.6K	1	
R154-56	ERJ6GEYJ393	M.RESISTOR CH 1/10W 39K	3	
R157,58	ERJ6GEYJ183	M.RESISTOR CH 1/10W 18K	2	
R159	ERJ6GEYJ682	M.RESISTOR CH 1/10W 6.8K	1	
R160	ERJ6GEYJ183	M.RESISTOR CH 1/10W 18K	1	
R161	ERJ6GEYJ103	M.RESISTOR CH 1/10W 10K	1	
R162	ERJ6GEYG563	M.RESISTOR CH 1/10W 56K	1	
R163	ERJ6GEYJ103	M.RESISTOR CH 1/10W 10K	1	
R164	ERJ6GEYJ562	M.RESISTOR CH 1/10W 5.6K	1	
R165	ERJ6GEYG563	M.RESISTOR CH 1/10W 56K	1	
R166	ERJ6GEYJ272	M.RESISTOR CH 1/10W 2.7K	1	
R167	ERJ6GEYJ333	M.RESISTOR CH 1/10W 33K	1	
R168	ERJ6GEYJ473	M.RESISTOR CH 1/10W 47K	1	
R169	ERJ6GEYJ183	M.RESISTOR CH 1/10W 18K	1	
R170,71	ERJ6GEYG563	M.RESISTOR CH 1/10W 56K	2	
R172	ERJ6GEYJ102	M.RESISTOR CH 1/10W 1K	1	
R181,82	ERJ6GEYG563	M.RESISTOR CH 1/10W 56K	2	
R183	ERJ6GEYJ102	M.RESISTOR CH 1/10W 1K	1	
R184	ERJ6GEYG563	M.RESISTOR CH 1/10W 56K	1	
R185	ERJ6GEYJ104	M.RESISTOR CH 1/10W 100K	1	
R186	ERJ6GEYJ102	M.RESISTOR CH 1/10W 1K	1	
R187,88	ERJ6GEYJ822	M.RESISTOR CH 1/10W 8.2K	2	
R189	ERJ6GEYJ561	M.RESISTOR CH 1/10W 560	1	
R190	ERJ6GEYJ472	M.RESISTOR CH 1/10W 4.7K	1	
R191,92	ERJ6GEYG563	M.RESISTOR CH 1/10W 56K	2	
R193,94	ERJ6GEYJ273	M.RESISTOR CH 1/10W 27K	2	
R195	ERJ6GEYJ562	M.RESISTOR CH 1/10W 5.6K	1	
R196	ERJ6GEYJ153	M.RESISTOR CH 1/10W 15K	1	
R197	ERJ6GEYJ332	M.RESISTOR CH 1/10W 3.3K	1	
R204	ERJ6GEYJ562	M.RESISTOR CH 1/10W 5.6K	1	
R205	ERJ6GEYJ101	M.RESISTOR CH 1/10W 100	1	
R206	ERJ6GEYJ104	M.RESISTOR CH 1/10W 100K	1	

Ref.No.	Part No.	Part Name & Description	Pcs	Remarks
R207-09	ERJ6GEYJ102	M.RESISTOR CH 1/10W 1K	3	
R210	ERJ6GEYJ153	M.RESISTOR CH 1/10W 15K	1	
R211	ERJ6GEYJ183	M.RESISTOR CH 1/10W 18K	1	
R212	ERJ6GEYJ683	M.RESISTOR CH 1/10W 68K	1	
R213-15	ERJ6GEYG563	M.RESISTOR CH 1/10W 56K	3	
R216	ERJ6GEYJ105	M.RESISTOR CH 1/10W 1M	1	
R222-27	ERJ6GEYG563	M.RESISTOR CH 1/10W 56K	6	
R228	ERJ6GEYJ104	M.RESISTOR CH 1/10W 100K	1	
R229	ERJ6GEYG223	M.RESISTOR CH 1/10W 22K	1	
R230	ERJ6GEYG563	M.RESISTOR CH 1/10W 56K	1	
R231	ERJ6GEYJ104	M.RESISTOR CH 1/10W 100K	1	
R232	VRE0034E272	M.RESISTOR CH 1/10W 2.7K	1	
R233	VRE0034E104	M.RESISTOR CH 1/10W 100K	1	
R234	VRE0034E272	M.RESISTOR CH 1/10W 2.7K	1	
R235	VRE0034E104	M.RESISTOR CH 1/10W 100K	1	
R236	ERJ6GEYG563	M.RESISTOR CH 1/10W 56K	1	
R237	ERJ6GEYJ824	M.RESISTOR CH 1/10W 820K	1	
R238	ERJ6GEYJ102	M.RESISTOR CH 1/10W 1K	1	
R239	ERJ6GEYJ103	M.RESISTOR CH 1/10W 10K	1	
R240	ERJ6GEYJ222	M.RESISTOR CH 1/10W 2.2K	1	
R241	ERJ6GEYJ104	M.RESISTOR CH 1/10W 100K	1	
R242	ERJ6GEYJ334	M.RESISTOR CH 1/10W 330K	1	
R243	ERJ6GEYJ101	M.RESISTOR CH 1/10W 100	1	
R244,45	ERJ6GEYJ103	M.RESISTOR CH 1/10W 10K	2	
R246	ERJ6GEYJ102	M.RESISTOR CH 1/10W 1K	1	
R247	ERJ6GEYJ103	M.RESISTOR CH 1/10W 10K	1	
R248	ERJ6GEYJ562	M.RESISTOR CH 1/10W 5.6K	1	
R249	ERJ6GEYJ392	M.RESISTOR CH 1/10W 3.9K	1	
R250	ERJ6GEYJ184	M.RESISTOR CH 1/10W 180K	1	
R251	ERJ6GEYJ224	M.RESISTOR CH 1/10W 220K	1	
R252	ERJ6GEYJ153	M.RESISTOR CH 1/10W 15K	1	
R253	ERJ6GEYJ564	M.RESISTOR CH 1/10W 560K	1	
R254-58	ERJ6GEYJ103	M.RESISTOR CH 1/10W 10K	5	
R259	ERJ6GEYG223	M.RESISTOR CH 1/10W 22K	1	
R260	ERJ6GEYJ393	M.RESISTOR CH 1/10W 39K	1	
R261	ERJ6GEYJ823	M.RESISTOR CH 1/10W 82K	1	
R262	ERJ6GEYJ123	M.RESISTOR CH 1/10W 12K	1	
R263	ERJ6GEYJ183	M.RESISTOR CH 1/10W 18K	1	
R264	ERJ6GEYJ333	M.RESISTOR CH 1/10W 33K	1	
R265	ERJ6GEYJ683	M.RESISTOR CH 1/10W 68K	1	
R266-69	ERJ6GEYG563	M.RESISTOR CH 1/10W 56K	4	
R270	ERJ6GEYJ562	M.RESISTOR CH 1/10W 5.6K	1	
R271	ERJ6GEYJ103	M.RESISTOR CH 1/10W 10K	1	
R273	ERJ6GEYJ393	M.RESISTOR CH 1/10W 39K	1	
R274	ERJ6GEYJ181	M.RESISTOR CH 1/10W 180	1	
R275	ERJ6GEYG563	M.RESISTOR CH 1/10W 56K	1	
R276,77	VRE0034E102	M.RESISTOR CH 1/10W 1K	2	
R278	ERJ6GEYJ472	M.RESISTOR CH 1/10W 4.7K	1	
R279-81	ERJ6GEYG563	M.RESISTOR CH 1/10W 56K	3	
R282	ERJ6GEYJ124	M.RESISTOR CH 1/10W 120K	1	
R283	ERJ6GEYJ103	M.RESISTOR CH 1/10W 10K	1	
R284	ERJ6GEYJ272	M.RESISTOR CH 1/10W 2.7K	1	
R285	ERJ6GEYJ122	M.RESISTOR CH 1/10W 1.2K	1	
R286,87	ERJ6GEYJ472	M.RESISTOR CH 1/10W 4.7K	2	
R288	ERJ6GEYJ473	M.RESISTOR CH 1/10W 47K	1	
R289	ERJ6GEYJ823	M.RESISTOR CH 1/10W 82K	1	
R301	ERJ6GEYG563	M.RESISTOR CH 1/10W 56K	1	
R302,03	ERJ6GEYJ103	M.RESISTOR CH 1/10W 10K	2	
R303	ERJ6GEY0R00	M.RESISTOR CH 1/10W 0	1	
R304	ERJ6GEYG563	M.RESISTOR CH 1/10W 56K	1	
R305	ERJ6GEYJ104	M.RESISTOR CH 1/10W 100K	1	
R306	ERJ6GEYJ683	M.RESISTOR CH 1/10W 68K	1	
R307	ERJ6GEYG223	M.RESISTOR CH 1/10W 22K	1	
R308	ERJ6GEYJ103	M.RESISTOR CH 1/10W 10K	1	
R309	ERJ6GEYJ101	M.RESISTOR CH 1/10W 100	1	
R310	ERJ6GEYJ822	M.RESISTOR CH 1/10W 8.2K	1	
R311	ERJ6GEYJ392	M.RESISTOR CH 1/10W 3.9K	1	
R312	ERJ6GEYJ153	M.RESISTOR CH 1/10W 15K	1	
R313	ERJ6GEYJ332	M.RESISTOR CH 1/10W 3.3K	1	
R314	ERJ6GEYJ151	M.RESISTOR CH 1/10W 150	1	
R315,16	ERJ6GEYJ103	M.RESISTOR CH 1/10W 10K	2	
R317	ERJ6GEYJ683	M.RESISTOR CH 1/10W 68K	1	
R318	ERJ6GEYJ103	M.RESISTOR CH 1/10W 10K	1	
R319	ERJ6GEYJ273	M.RESISTOR CH 1/10W 27K	1	
R320	ERJ6GEYJ104	M.RESISTOR CH 1/10W 100K	1	
R321	ERJ6GEYG223	M.RESISTOR CH 1/10W 22K	1	
R322	ERJ6GEYG563	M.RESISTOR CH 1/10W 56K	1	
R325,26	VRE0034E332	M.RESISTOR CH 1/10W 3.3K	2	
R327	ERJ6GEYG223	M.RESISTOR CH 1/10W 22K	1	
R328	ERJ6GEYJ104	M.RESISTOR CH 1/10W 100K	1	
R329	ERJ6GEYJ393	M.RESISTOR CH 1/10W 39K	1	
R330	ERJ6GEYJ334	M.RESISTOR CH 1/10W 330K	1	
R331	ERJ6GEYJ474	M.RESISTOR CH 1/10W 470K	1	
R332,33	ERJ6GEYJ104	M.RESISTOR CH 1/10W 100K	2	
R334	ERJ6GEYJ105	M.RESISTOR CH 1/10W 1M	1	
R335	ERJ6GEYJ394	M.RESISTOR CH 1/10W 390K	1	
R336	ERJ6GEYJ472	M.RESISTOR CH 1/10W 4.7K	1	
R337,38	ERJ6GEYJ103	M.RESISTOR CH 1/10W 10K	2	
R339,40	VRE0034E332	M.RESISTOR CH 1/10W 3.3K	2	
R341	ERJ6GEYG223	M.RESISTOR CH 1/10W 22K	1	
R342	ERJ6GEYJ104	M.RESISTOR CH 1/10W 100K	1	
R343	ERJ6GEYJ473	M.RESISTOR CH 1/10W 47K	1	
R344	ERJ6GEYJ334	M.RESISTOR CH 1/10W 330K	1	
R345	ERJ6GEYJ474	M.RESISTOR CH 1/10W 470K	1	
R346	ERJ6GEYJ104	M.RESISTOR CH 1/10W 100K	1	
R347	ERJ6GEYJ105	M.RESISTOR CH 1/10W 1M	1	
R348	ERJ6GEYJ684	M.RESISTOR CH 1/10W 680K	1	
R349,50	ERJ6GEYJ103	M.RESISTOR CH 1/10W 10K	2	
R351	ERJ6GEYJ472	M.RESISTOR CH 1/10W 4.7K	1	
R352-55	ERJ6GEYJ103	M.RESISTOR CH 1/10W 10K	4	
R356	ERJ6GEYJ222	M.RESISTOR CH 1/10W 2.2K	1	
R357	ERJ6GEYG223	M.RESISTOR CH 1/10W 22K	1	
R358	ERJ6GEYJ104	M.RESISTOR CH 1/10W 100K	1	
R359,60	ERJ6GEYJ103	M.RESISTOR CH 1/10W 10K	2	
R362,63	ERJ6GEYJ103	M.RESISTOR CH 1/10W 10K	2	
R365	ERJ6GEYJ104	M.RESISTOR CH 1/10W 100K	1	
R366	ERJ6GEYJ103	M.RESISTOR CH 1/10W 10K	1	
R366	ERJ6GEYJ473	M.RESISTOR CH 1/10W 47K	1	
R367,68	ERJ6GEYG563	M.RESISTOR CH 1/10W 56K	2	
R369	ERJ6GEYJ104	M.RESISTOR CH 1/10W 100K	1	
R370,71	ERJ6GEYJ103	M.RESISTOR CH 1/10W 10K	2	
R373,74	ERJ6GEYJ103	M.RESISTOR CH 1/10W 10K	2	
R376	ERJ6GEYJ104	M.RESISTOR CH 1/10W 100K	1	
R378,79	ERJ6GEYG563	M.RESISTOR CH 1/10W 56K	2	
R380	ERJ6GEYJ103	M.RESISTOR CH 1/10W 10K	1	
R381	ERJ6GEYJ473	M.RESISTOR CH 1/10W 47K	1	
R382	ERJ6GEYJ683	M.RESISTOR CH 1/10W 68K	1	
R383	ERJ6GEYJ152	M.RESISTOR CH 1/10W 1.5K	1	
R386	ERJ6GEYJ182	M.RESISTOR CH 1/10W 1.8K	1	
R388	ERJ6GEYJ273	M.RESISTOR CH 1/10W 27K	1	
R389	ERJ6GEYJ153	M.RESISTOR CH 1/10W 15K	1	
R390	ERJ6GEYJ273	M.RESISTOR CH 1/10W 27K	1	
R391	ERJ6GEYJ153	M.RESISTOR CH 1/10W 15K	1	
R392,93	ERJ6GEYJ103	M.RESISTOR CH 1/10W 10K	2	
R394,95	VRE0034E102	M.RESISTOR CH 1/10W 1K	2	
R396,97	VRE0034E472	M.RESISTOR CH 1/10W 4.7K	2	
R398	ERJ6GEYJ183	M.RESISTOR CH 1/10W 18K	1	
R424	ERJ6GEYJ222	M.RESISTOR CH 1/10W 2.2K	1	
R427	ERJ6GEYJ333	M.RESISTOR CH 1/10W 33K	1	
R428	ERJ6GEYG223	M.RESISTOR CH 1/10W 22K	1	
R432,33	ERJ6GEYJ393	M.RESISTOR CH 1/10W 39K	2	
R435	ERJ6GEYJ103	M.RESISTOR CH 1/10W 10K	1	
R437	ERJ6GEYJ684	M.RESISTOR CH 1/10W 680K	1	
R440	ERJ6GEYJ562	M.RESISTOR CH 1/10W 5.6K	1	
R442	ERJ6GEYJ105	M.RESISTOR CH 1/10W 1M	1	
R443	ERJ6GEYG223	M.RESISTOR CH 1/10W 22K	1	
R445	ERJ6GEY0R00	M.RESISTOR CH 1/10W 0	1	
R446,47	ERJ6GEYJ562	M.RESISTOR CH 1/10W 5.6K	2	
R448	ERJ6GEYG105	M.RESISTOR CH 1/10W 1M	1	
R449	ERJ6GEYJ105	M.RESISTOR CH 1/10W 1M	1	
R460	ERJ6GEYJ103	M.RESISTOR CH 1/10W 10K	1	
R461	ERJ6GEYG103	M.RESISTOR CH 1/10W 10K	1	
R462	ERJ6GEYG223	M.RESISTOR CH 1/10W 22K	1	
R463,64	ERJ6GEYJ331	M.RESISTOR CH 1/10W 330	2	
R465	ERJ6GEYG223	M.RESISTOR CH 1/10W 22K	1	
R466	ERJ6GEYG103	M.RESISTOR CH 1/10W 10K	1	
R467	ERJ6GEYJ473	M.RESISTOR CH 1/10W 47K	1	
R469	ERJ6GEYJ564	M.RESISTOR CH 1/10W 560K	1	
R470	ERJ6GEYJ394	M.RESISTOR CH 1/10W 390K	1	
R477	ERJ6GEYJ562	M.RESISTOR CH 1/10W 5.6K	1	

Ref.No.		Part No.	Part Name & Description	Pcs	Remarks
R501		ERJ6GEYJ102	M.RESISTOR CH 1/10W 1K	1	
R502		ERJ6GEYJ103	M.RESISTOR CH 1/10W 10K	1	
R503		ERJ6GEYJ102	M.RESISTOR CH 1/10W 1K	1	
R504-07		ERJ6GEYJ821	M.RESISTOR CH 1/10W 820	4	
R508		ERJ6GEYJ473	M.RESISTOR CH 1/10W 47K	1	
R509-12		ERJ6GEYJ391	M.RESISTOR CH 1/10W 390	4	
R513		ERJ6GEYJ103	M.RESISTOR CH 1/10W 10K	1	
R514		ERJ6GEYJ224	M.RESISTOR CH 1/10W 220K	1	
R515		ERJ6GEYJ273	M.RESISTOR CH 1/10W 27K	1	
R516		ERJ6GEYJ103	M.RESISTOR CH 1/10W 10K	1	
R517		ERJ6GEYJ272	M.RESISTOR CH 1/10W 2.7K	1	
R518		ERJ6GEYJ104	M.RESISTOR CH 1/10W 100K	1	
R519		ERJ6GEYJ392	M.RESISTOR CH 1/10W 3.9K	1	
R520		ERJ6GEYJ333	M.RESISTOR CH 1/10W 33K	1	
R521,22		ERJ6GEYJ224	M.RESISTOR CH 1/10W 220K	2	
R523		ERX12SJR47	M.RESISTOR 1/2W 0.47	1	
R524		ERJ6GEYJ273	M.RESISTOR CH 1/10W 27K	1	
R525		ERJ6GEYJ272	M.RESISTOR CH 1/10W 2.7K	1	
R526		ERJ6GEYJ103	M.RESISTOR CH 1/10W 10K	1	
R527		ERJ6GEYJ104	M.RESISTOR CH 1/10W 100K	1	
R528		ERJ6GEYJ224	M.RESISTOR CH 1/10W 220K	1	
R529		ERJ6GEYJ392	M.RESISTOR CH 1/10W 3.9K	1	
R530		ERJ6GEYG223	M.RESISTOR CH 1/10W 22K	1	
R531		ERJ6GEYJ224	M.RESISTOR CH 1/10W 220K	1	
R532		ERX12SJR68	M.RESISTOR 1/2W 0.68	1	
R533		ERJ6GEYJ224	M.RESISTOR CH 1/10W 220K	1	
R534		ERJ6GEYJ273	M.RESISTOR CH 1/10W 27K	1	
R535		ERJ6GEYJ103	M.RESISTOR CH 1/10W 10K	1	
R536		ERJ6GEYJ104	M.RESISTOR CH 1/10W 100K	1	
R537		ERX12SJR47	M.RESISTOR 1/2W 0.47	1	
R538-40		ERJ6GEYJ224	M.RESISTOR CH 1/10W 220K	3	
R541		ERJ6GEYJ272	M.RESISTOR CH 1/10W 2.7K	1	
R542		ERJ6GEYG223	M.RESISTOR CH 1/10W 22K	1	
R543		ERJ6GEYJ273	M.RESISTOR CH 1/10W 27K	1	
R544		ERJ6GEYJ104	M.RESISTOR CH 1/10W 100K	1	
R545		ERJ6GEYJ103	M.RESISTOR CH 1/10W 10K	1	
R546		ERX12SJR47	M.RESISTOR 1/2W 0.47	1	
R547-49		ERJ6GEYJ224	M.RESISTOR CH 1/10W 220K	3	
R550		ERJ6GEYJ272	M.RESISTOR CH 1/10W 2.7K	1	
R551		ERJ6GEYG223	M.RESISTOR CH 1/10W 22K	1	
R553		ERJ6GEY0R00	M.RESISTOR CH 1/10W 0	1	
R554		ERJ6GEYJ272	M.RESISTOR CH 1/10W 2.7K	1	
R555-57		ERJ6GEY0R00	M.RESISTOR CH 1/10W 0	3	
R600		ERJ6GEYJ271	M.RESISTOR CH 1/10W 270	1	
R601		ERJ6GEYJ105	M.RESISTOR CH 1/10W 1M	1	
R603		ERJ6GEYJ271	M.RESISTOR CH 1/10W 270	1	
R604		ERJ6GEYJ105	M.RESISTOR CH 1/10W 1M	1	
R700		ERJ6GEYJ103	M.RESISTOR CH 1/10W 10K	1	
R701		ERJ6GEYJ473	M.RESISTOR CH 1/10W 47K	1	
R702		ERJ6GEYJ103	M.RESISTOR CH 1/10W 10K	1	
R703		ERJ6GEYJ473	M.RESISTOR CH 1/10W 47K	1	
R704		ERJ6GEYJ103	M.RESISTOR CH 1/10W 10K	1	
R705		ERJ6GEYJ183	M.RESISTOR CH 1/10W 18K	1	
R706		ERJ6GEYJ473	M.RESISTOR CH 1/10W 47K	1	
R707		ERJ6GEYJ474	M.RESISTOR CH 1/10W 470K	1	
R708		ERJ6GEYJ331	M.RESISTOR CH 1/10W 330	1	
R709		ERJ6GEYJ102	M.RESISTOR CH 1/10W 1K	1	
R710		ERJ6GEYJ392	M.RESISTOR CH 1/10W 3.9K	1	
R711		ERJ6GEYJ393	M.RESISTOR CH 1/10W 39K	1	
R712		ERJ6GEYJ102	M.RESISTOR CH 1/10W 1K	1	
R713,14		ERJ6GEYG332	M.RESISTOR CH 1/10W 3.3K	2	
R715		ERJ6GEYG222	M.RESISTOR CH 1/10W 2.2K	1	
R716,17		ERJ6GEYJ332	M.RESISTOR CH 1/10W 3.3K	2	
R718		ERJ6GEYJ103	M.RESISTOR CH 1/10W 10K	1	
R719-26		ERJ6GEYG273	M.RESISTOR CH 1/10W 27K	8	
R727-40		ERJ6GEYJ473	M.RESISTOR CH 1/10W 47K	14	
R741		ERJ6GEYJ103	M.RESISTOR CH 1/10W 10K	1	
R742,43		ERJ6GEYJ473	M.RESISTOR CH 1/10W 47K	2	
R744		ERJ6GEYJ103	M.RESISTOR CH 1/10W 10K	1	
R746-50		ERJ6GEYJ103	M.RESISTOR CH 1/10W 10K	5	
R751		ERJ6GEYJ272	M.RESISTOR CH 1/10W 2.7K	1	
R752-54		ERJ6GEYJ561	M.RESISTOR CH 1/10W 560	3	
R755		ERJ6GEYG223	M.RESISTOR CH 1/10W 22K	1	
R756-58		ERJ6GEYG273	M.RESISTOR CH 1/10W 27K	3	
R759		ERJ6GEYG823	M.RESISTOR CH 1/10W 82K	1	

Ref.No.		Part No.	Part Name & Description	Pcs	Remarks
R760		ERJ6GEYG682	M.REISITOR CH 1/10W 6.8K	1	
R761		ERJ6GEYG153	M.RESISTOR CH 1/10W 15K	1	
R762		ERJ6GEYG124	M.RESISTOR CH 1/10W 120K	1	
R763		ERJ6GEYJ394	M.RESISTOR CH 1/10W 390K	1	
R764		ERJ6GEYJ124	M.RESISTOR CH 1/10W 120K	1	
R765		ERJ6GEYJ394	M.RESISTOR CH 1/10W 390K	1	
R766,67		ERJ6GEYJ273	M.RESISTOR CH 1/10W 27K	2	
R768		ERJ6GEYG182	M.RESISTOR CH 1/10W 1.8K	1	
R769		ERJ6GEYJ154	M.RESISTOR CH 1/10W 150K	1	
R770		ERJ6GEYJ393	M.RESISTOR CH 1/10W 39K	1	
R771		ERJ6GEYG682	M.REISITOR CH 1/10W 6.8K	1	
R772-74		ERJ6GEYG273	M.RESISTOR CH 1/10W 27K	3	
R775		ERJ6GEYG823	M.RESISTOR CH 1/10W 82K	1	
R776		ERJ6GEYG682	M.REISITOR CH 1/10W 6.8K	1	
R777,78		ERJ6GEYG564	M.RESISTOR CH 1/10W 560K	2	
R779		ERJ6GEYJ564	M.RESISTOR CH 1/10W 560K	1	
R780,81		ERJ6GEYG333	M.RESISTOR CH 1/10W 33K	2	
R782		ERJ6GEYJ564	M.RESISTOR CH 1/10W 560K	1	
R783		ERJ6GEYG153	M.RESISTOR CH 1/10W 15K	1	
R784		ERJ6GEYG124	M.RESISTOR CH 1/10W 120K	1	
R785		ERJ6GEYJ124	M.RESISTOR CH 1/10W 120K	1	
R786,87		ERJ6GEYJ394	M.RESISTOR CH 1/10W 390K	2	
R788,89		ERJ6GEYJ273	M.RESISTOR CH 1/10W 27K	2	
R790		ERJ6GEYG182	M.RESISTOR CH 1/10W 1.8K	1	
R791		ERJ6GEYJ154	M.RESISTOR CH 1/10W 150K	1	
R792		ERJ6GEYJ393	M.RESISTOR CH 1/10W 39K	1	
R793		ERJ6GEYG682	M.REISITOR CH 1/10W 6.8K	1	
R794,95		ERJ6GEYG273	M.RESISTOR CH 1/10W 27K	2	
R796		ERJ6GEYJ123	M.RESISTOR CH 1/10W 12K	1	
R797,98		ERJ6GEYJ104	M.RESISTOR CH 1/10W 100K	2	
R799		ERJ6GEYJ393	M.RESISTOR CH 1/10W 39K	1	
R800		ERJ6GEYJ103	M.RESISTOR CH 1/10W 10K	1	
R801,02		VRE0034E103	M.RESISTOR CH 1/10W 10K	2	
R803		ERJ6GEYJ474	M.RESISTOR CH 1/10W 470K	1	
R804,05		ERJ6GEYJ224	M.RESISTOR CH 1/10W 220K	2	
R806		ERJ6GEYJ272	M.RESISTOR CH 1/10W 2.7K	1	
R807		ERJ6GEYJ224	M.RESISTOR CH 1/10W 220K	1	
R808		ERJ6GEYJ272	M.RESISTOR CH 1/10W 2.7K	1	
R809		ERJ6GEYJ103	M.RESISTOR CH 1/10W 10K	1	
R810,11		VRE0034E103	M.RESISTOR CH 1/10W 10K	2	
R812		ERJ6GEYJ474	M.RESISTOR CH 1/10W 470K	1	
R813,14		ERJ6GEYJ224	M.RESISTOR CH 1/10W 220K	2	
R815		ERJ6GEYJ272	M.RESISTOR CH 1/10W 2.7K	1	
R816		ERJ6GEYJ224	M.RESISTOR CH 1/10W 220K	1	
R817		ERJ6GEYJ272	M.RESISTOR CH 1/10W 2.7K	1	
RA700,01		VCR0202	RESISTOR ARRAY	2	
RA702		EXBLD8103G	COMBI.R-R 10K	1	
SW1,W2		VSR0032	VOLTAGE SELECT SWITCH	2	
SW700		VSS0207	SWITCH	1	
TP3-P7		VJR0646	TEST POINT	5	
TP13		VJR0646	TEST POINT	1	
TP15-17		VJR0646	TEST POINT	3	
TP19,20		VJR0646	TEST POINT	2	
TP102-05		VJR0646	TEST POINT	4	
TP108-18		VJR0646	TEST POINT	11	
TP201,02		VJR0646	TEST POINT	2	
TP302-04		VJR0646	TEST POINT	3	
TP306		VJR0646	TEST POINT	1	
TP309-12		VJR0646	TEST POINT	4	
TP700-14		VJR0646	TEST POINT	15	
TPG1-G3		VJR0646	TEST POINT	3	
VC101		ECV1ZW30X53	V.CAPACITOR 30P	1	

Ref.No.		Part No.	Part Name & Description	Pcs	Remarks
VR1		VRV0109B503	V.RESISTOR 50K	1	
VR3		VRV0109B503	V.RESISTOR 50K	1	
VR101		VRV0109B203	V.RESISTOR 20K	1	
VR102		VRV0109B103	V.RESISTOR 10K	1	
VR103		VRV0109B203	V.RESISTOR 20K	1	
VR104		VRV0109B502	V.RESISTOR 5K	1	
VR105		VRV0109B104	V.RESISTOR 100K	1	
VR301		VRV0109B502	V.RESISTOR 5K	1	
VR302,03		VRV0109B202	V.RESISTOR 2K	2	
VR304-07		VRV0109B503	V.RESISTOR 50K	4	
VR308		VRV0109B202	V.RESISTOR 2K	1	
VR309		VRV0109B503	V.RESISTOR 50K	1	
VR700		VRV0109B202	V.RESISTOR 2K	1	
VR701		VRV0109B103	V.RESISTOR 10K	1	
VR702,03		VRV0064B503	V.RESISTOR 50K	2	
VR704-07		VRV0064B203	V.RESISTOR 20K	4	
VR708,09		VRV0109B102	V.RESISTOR 1K	2	
X101		VSX0217	CRYSTAL OSCILLATOR	1	
X501		VSX0136	CRYSTAL OSCILLATOR	1	
X600		VSX0126	CRYSTAL OSCILLATOR	1	
X601		VSX0086	CRYSTAL OSCILLATOR	1	
X700		VSX0257	CRYSTAL OSCILLATOR	1	
			MISCELLANEOUS		
		VML2143	CARD PULLER	1	
		VML2144	CARD PULLER	1	
		VMZ1547	BARRIER	1	
		VSC2286	SHIELD CASE	1	
		VXA3966	P.C.B. SHIELD PLATE	1	
		XYNV3+K6FR	SCREW	5	

Ref.No.		Part No.	Part Name & Description	Pcs	Remarks
	■	VEP84095K	P.C.BOARD W/COMPONENT		FOR AU-65H
			W6 AUDIO		
			CAPACITORS		
C1,C2		ECEA1CU470	E.CAPACITOR 16V 47U	2	
C3		ECEA0JU101	E.CAPACITOR 6.3V 100U	1	
C4		ECEA1CN100S	E.CAPACITOR 16V 10U	1	
C5		ECEA1HNR33S	E.CAPACITOR 50V 0.33U	1	
C6		ECUM1E473KBN	C.CAPACITOR CH 25V 0.047U	1	
C7		ECUM1H222KBN	C.CAPACITOR CH 50V 2200P	1	
C8		ECEA1CN100S	E.CAPACITOR 16V 10U	1	
C9		ECEA1CU100	E.CAPACITOR 16V 10U	1	
C10		ECEA1CN100S	E.CAPACITOR 16V 10U	1	
C11		ECUM1H272KBN	C.CAPACITOR CH 50V 2700P	1	
C12		ECEA1CU100	E.CAPACITOR 16V 10U	1	
C13,14		ECEA1CU470	E.CAPACITOR 16V 47U	2	
C17		ECUM1H822KBN	C.CAPACITOR CH 50V 8200P	1	
C18		ECUM1H681JCN	C.CAPACITOR CH 50V 680P	1	
C101		ECUM1H220JCN	C.CAPACITOR CH 50V 22P	1	
C102		ECEA1CN100S	E.CAPACITOR 16V 10U	1	
C103		ECUM1H470JCN	C.CAPACITOR CH 50V 47P	1	
C104		ECEA1CN100S	E.CAPACITOR 16V 10U	1	
C105		ECEA1CU470	E.CAPACITOR 16V 47U	1	
C106		ECUM1H470JCN	C.CAPACITOR CH 50V 47P	1	
C107		ECUM1E104ZFN	C.CAPACITOR CH 25V 0.1U	1	
C108		ECEA1CU101	E.CAPACITOR 16V 100U	1	
C109		ECEA1CN470S	E.CAPACITOR 16V 47U	1	
C110		ECEA1CU101	E.CAPACITOR 16V 100U	1	
C111		ECUM1E104ZFN	C.CAPACITOR CH 25V 0.1U	1	
C112,13		ECEA1CU101	E.CAPACITOR 16V 100U	2	
C114		ECEA1CN100S	E.CAPACITOR 16V 10U	1	
C115		ECUM1H220JCN	C.CAPACITOR CH 50V 22P	1	
C116,17		ECEA1CN100S	E.CAPACITOR 16V 10U	2	
C118		ECEA1CU470	E.CAPACITOR 16V 47U	1	
C120		ECUM1H470JCN	C.CAPACITOR CH 50V 47P	1	
C121		ECUM1H820JCN	C.CAPACITOR CH 50V 82P	1	
C122		ECUM1H151JCN	C.CAPACITOR CH 50V 150P	1	
C124		ECUM1H470JCN	C.CAPACITOR CH 50V 47P	1	
C125		ECEA0JU471	E.CAPACITOR 6.3V 470U	1	
C127,28		ECEA1CU470	E.CAPACITOR 16V 47U	2	
C129		ECQM1H473JF	P.CAPACITOR 50V 0.047U	1	
C130		ECUM1H331JCN	C.CAPACITOR CH 50V 330P	1	
C131,32		ECEA1CU470	E.CAPACITOR 16V 47U	2	
C133		ECUM1H562KBN	C.CAPACITOR CH 50V 5600P	1	
C134,35		ECEA1CN100S	E.CAPACITOR 16V 10U	2	
C136		ECQP1H472FZ	P.CAPACITOR 50V 4700P	1	
C137		ECEA1CU100	E.CAPACITOR 16V 10U	1	
C138		ECQM1H473JF	P.CAPACITOR 50V 0.047U	1	
C139		ECEA1HUR22	E.CAPACITOR 50V 0.22U	1	
C140,41		ECEA1HUR68	E.CAPACITOR 50V 0.68U	2	
C142		ECEA1HUR22	E.CAPACITOR 50V 0.22U	1	
C143		ECQM1H473JF	P.CAPACITOR 50V 0.047U	1	
C144		ECEA1CU100	E.CAPACITOR 16V 10U	1	
C145		ECQP1H472FZ	P.CAPACITOR 50V 4700P	1	
C146		ECEA1CN100S	E.CAPACITOR 16V 10U	1	
C147		ECQP1H103FZ	P.CAPACITOR 50V 0.01U	1	
C148,49		ECQM1H394JF	P.CAPACITOR 50V 0.39U	2	
C201		ECUM1H391JCN	C.CAPACITOR CH 50V 390P	1	
C202		ECEA1CN100S	E.CAPACITOR 16V 10U	1	
C203		ECUM1H272KBN	C.CAPACITOR CH 50V 2700P	1	
C204,05		ECEA1CN100S	E.CAPACITOR 16V 10U	2	
C206		ECEA1CN470S	E.CAPACITOR 16V 47U	1	
C207		ECUM1H682KBN	C.CAPACITOR CH 50V 6800P	1	
C208		ECQM1H473JF	P.CAPACITOR 50V 0.047U	1	
C209		ECEA1CN100S	E.CAPACITOR 16V 10U	1	
C210		ECQM1H394JF	P.CAPACITOR 50V 0.39U	1	
C211		ECUM1H222KBN	C.CAPACITOR CH 50V 2200P	1	
C212		ECUM1H472KBN	C.CAPACITOR CH 50V 4700P	1	

Ref.No.		Part No.	Part Name & Description	Pcs	Remarks
C213		ECUM1H682KBN	C.CAPACITOR CH 50V 6800P	1	
C214		ECUM1H103KBN	C.CAPACITOR CH 50V 0.01U	1	
C215		ECUM1E153KBN	C.CAPACITOR CH 25V 0.015U	1	
C216		ECEA1CN100S	E.CAPACITOR 16V 10U	1	
C217		ECUM1H152KBN	C.CAPACITOR CH 50V 1500P	1	
C218		ECUM1H122KBN	C.CAPACITOR CH 50V 1200P	1	
C219		ECUM1H152KBN	C.CAPACITOR CH 50V 1500P	1	
C220		ECUM1H102KBN	C.CAPACITOR CH 50V 1000P	1	
C301		ECUM1H220JCN	C.CAPACITOR CH 50V 22P	1	
C302		ECEA1CN100S	E.CAPACITOR 16V 10U	1	
C303		ECUM1H470JCN	C.CAPACITOR CH 50V 47P	1	
C304		ECEA1CN100S	E.CAPACITOR 16V 10U	1	
C305		ECEA1CU470	E.CAPACITOR 16V 47U	1	
C306		ECUM1H470JCN	C.CAPACITOR CH 50V 47P	1	
C307		ECUM1E104ZFN	C.CAPACITOR CH 25V 0.1U	1	
C308		ECEA1CU101	E.CAPACITOR 16V 100U	1	
C309		ECEA1CN470S	E.CAPACITOR 16V 47U	1	
C310		ECEA1CU101	E.CAPACITOR 16V 100U	1	
C311		ECUM1E104ZFN	C.CAPACITOR CH 25V 0.1U	1	
C312,13		ECEA1CU101	E.CAPACITOR 16V 100U	2	
C314		ECEA1CN100S	E.CAPACITOR 16V 10U	1	
C315		ECUM1H220JCN	C.CAPACITOR CH 50V 22P	1	
C316,17		ECEA1CN100S	E.CAPACITOR 16V 10U	2	
C318		ECEA1CU470	E.CAPACITOR 16V 47U	1	
C320		ECUM1H470JCN	C.CAPACITOR CH 50V 47P	1	
C321		ECUM1H820JCN	C.CAPACITOR CH 50V 82P	1	
C322		ECUM1H151JCN	C.CAPACITOR CH 50V 150P	1	
C324		ECUM1H470JCN	C.CAPACITOR CH 50V 47P	1	
C325		ECEA0JU471	E.CAPACITOR 6.3V 470U	1	
C327,28		ECEA1CU470	E.CAPACITOR 16V 47U	2	
C329		ECQM1H473JF	P.CAPACITOR 50V 0.047U	1	
C330		ECUM1H331JCN	C.CAPACITOR CH 50V 330P	1	
C331,32		ECEA1CU470	E.CAPACITOR 16V 47U	2	
C333		ECUM1H562KBN	C.CAPACITOR CH 50V 5600P	1	
C334,35		ECEA1CN100S	E.CAPACITOR 16V 10U	2	
C336		ECQP1H472FZ	P.CAPACITOR 50V 4700P	1	
C337		ECEA1CU100	E.CAPACITOR 16V 10U	1	
C338		ECQM1H473JF	P.CAPACITOR 50V 0.047U	1	
C339		ECEA1HUR22	E.CAPACITOR 50V 0.22U	1	
C340,41		ECEA1HUR68	E.CAPACITOR 50V 0.68U	2	
C342		ECEA1HUR22	E.CAPACITOR 50V 0.22U	1	
C343		ECQM1H473JF	P.CAPACITOR 50V 0.047U	1	
C344		ECEA1CU100	E.CAPACITOR 16V 10U	1	
C345		ECQP1H472FZ	P.CAPACITOR 50V 4700P	1	
C346		ECEA1CN100S	E.CAPACITOR 16V 10U	1	
C347		ECQP1H103FZ	P.CAPACITOR 50V 0.01U	1	
C348,49		ECQM1H394JF	P.CAPACITOR 50V 0.39U	2	
C401		ECUM1H391JCN	C.CAPACITOR CH 50V 390P	1	
C402		ECEA1CN100S	E.CAPACITOR 16V 10U	1	
C403		ECUM1H272KBN	C.CAPACITOR CH 50V 2700P	1	
C404,05		ECEA1CN100S	E.CAPACITOR 16V 10U	2	
C406		ECEA1CN470S	E.CAPACITOR 16V 47U	1	
C407		ECUM1H682KBN	C.CAPACITOR CH 50V 6800P	1	
C408		ECQM1H473JF	P.CAPACITOR 50V 0.047U	1	
C409		ECEA1CN100S	E.CAPACITOR 16V 10U	1	
C410		ECQM1H394JF	P.CAPACITOR 50V 0.39U	1	
C411		ECUM1H222KBN	C.CAPACITOR CH 50V 2200P	1	
C412		ECUM1H472KBN	C.CAPACITOR CH 50V 4700P	1	
C413		ECUM1H682KBN	C.CAPACITOR CH 50V 6800P	1	
C414		ECUM1H103KBN	C.CAPACITOR CH 50V 0.01U	1	
C415		ECUM1E153KBN	C.CAPACITOR CH 25V 0.015U	1	
C416		ECEA1CN100S	E.CAPACITOR 16V 10U	1	
C417		ECUM1H152KBN	C.CAPACITOR CH 50V 1500P	1	
C418		ECUM1H122KBN	C.CAPACITOR CH 50V 1200P	1	
C419		ECUM1H152KBN	C.CAPACITOR CH 50V 1500P	1	
C420		ECUM1H102KBN	C.CAPACITOR CH 50V 1000P	1	
C501		ECEA1CU101	E.CAPACITOR 16V 100U	1	
C503		ECEA1CU220	E.CAPACITOR 16V 22U	1	
C551		ECUM1E104ZFN	C.CAPACITOR CH 25V 0.1U	1	
C553		ECEA1AU101	E.CAPACITOR 10V 100U	1	
C554,55		ECUM1E104ZFN	C.CAPACITOR CH 25V 0.1U	2	
C556		ECEA1VU101	E.CAPACITOR 35V 100U	1	
C557		ECEA1EU101	E.CAPACITOR 25V 100U	1	
C558		ECQM1H104JF	P.CAPACITOR 50V 0.1U	1	
C559,60		ECUM1H103KBN	C.CAPACITOR CH 50V 0.01U	2	

Ref.No.	Part No.	Part Name & Description	Pcs	Remarks
C561	ECEA1EU100	E.CAPACITOR 25V 10U	1	
C562	ECCD2H181J	C.CAPACITOR 500V 180P	1	
C563	ECCD2H271J	C.CAPACITOR 500V 270P	1	
C564	ECQM1H104JF	P.CAPACITOR 50V 0.1U	1	
C565,66	ECUM1H103KBN	C.CAPACITOR CH 50V 0.01U	2	
C567	ECEA1EU100	E.CAPACITOR 25V 10U	1	
C568	ECCD2H181J	C.CAPACITOR 500V 180P	1	
C569	ECCD2H271J	C.CAPACITOR 500V 270P	1	
C570	ECQM1H104JF	P.CAPACITOR 50V 0.1U	1	
C571-73	ECUM1H103KBN	C.CAPACITOR CH 50V 0.01U	3	
C574	ECEA1EU100	E.CAPACITOR 25V 10U	1	
C575	ECQM1H104JF	P.CAPACITOR 50V 0.1U	1	
C576	VCF2JAB182JE	P.CAPACITOR V	1	
C577	ECQM1H104JF	P.CAPACITOR 50V 0.1U	1	
C578-80	ECUM1H103KBN	C.CAPACITOR CH 50V 0.01U	3	
C581	ECEA1EU100	E.CAPACITOR 25V 10U	1	
C582	ECQM1H104JF	P.CAPACITOR 50V 0.1U	1	
C583	VCF2JAB182JE	P.CAPACITOR V	1	
C584	ECQM1H104JF	P.CAPACITOR 50V 0.1U	1	
C585,86	ECUM1H103KBN	C.CAPACITOR CH 50V 0.01U	2	
C587	ECEA1EU100	E.CAPACITOR 25V 10U	1	
C588	VCF2JAB102JE	P.CAPACITOR V	1	
C589	ECCD2H680K	C.CAPACITOR 500V 68P	1	
C590	ECEA1AU470	E.CAPACITOR 10V 47U	1	
C591	ECQM1H104JF	P.CAPACITOR 50V 0.1U	1	
C592-94	ECUM1H103KBN	C.CAPACITOR CH 50V 0.01U	3	
C595	ECEA1EU100	E.CAPACITOR 25V 10U	1	
C596	VCF2JAB222JE	P.CAPACITOR V	1	
C597	ECUM1E104ZFN	C.CAPACITOR CH 25V 0.1U	1	
C598,99	ECUM1H103KBN	C.CAPACITOR CH 50V 0.01U	2	
C600	ECEA1EU100	E.CAPACITOR 25V 10U	1	
C601	VCF2JAB222JE	P.CAPACITOR V	1	
C602	ECUM1E104ZFN	C.CAPACITOR CH 25V 0.1U	1	
C603,04	ECUM1H103KBN	C.CAPACITOR CH 50V 0.01U	2	
C605	ECEA1EU100	E.CAPACITOR 25V 10U	1	
C606	VCF2JAB222JE	P.CAPACITOR V	1	
C607,08	ECUM1H330JCN	C.CAPACITOR CH 50V 33P	2	
C609	ECEA1HU3R3	E.CAPACITOR 50V 3.3U	1	
C610-12	ECUM1H331JCN	C.CAPACITOR CH 50V 330P	3	
C701	ECEA1CN470S	E.CAPACITOR 16V 47U	1	
C702	ECUM1H182KBN	C.CAPACITOR CH 50V 1800P	1	
C703	ECUM1H821JCN	C.CAPACITOR CH 50V 820P	1	
C712	ECEA1HU4R7	E.CAPACITOR 50V 4.7U	1	
C713	ECEA1HU3R3	E.CAPACITOR 50V 3.3U	1	
C714	ECQM1H682JF	P.CAPACITOR 50V 6800P	1	
C715	ECQM1H102JF	P.CAPACITOR 50V 1000P	1	
C716	ECQM1H223JF	P.CAPACITOR 50V 0.022U	1	
C717	ECEA1CU100	E.CAPACITOR 16V 10U	1	
C719	ECEA1HU4R7	E.CAPACITOR 50V 4.7U	1	
C720	ECEA1CU470	E.CAPACITOR 16V 47U	1	
C721	ECQM1H103JF	P.CAPACITOR 50V 0.01U	1	
C722	ECQB1H332JF	P.CAPACITOR 50V 3300P	1	
C723	ECUM1H272KBN	C.CAPACITOR CH 50V 2700P	1	
C724,25	ECUM1H102KBN	C.CAPACITOR CH 50V 1000P	2	
C726	ECEA1CN100S	E.CAPACITOR 16V 10U	1	
C727	ECEA1CU101	E.CAPACITOR 16V 100U	1	
C728	ECUM1E104ZFN	C.CAPACITOR CH 25V 0.1U	1	
C729,30	ECUM1H103KBN	C.CAPACITOR CH 50V 0.01U	2	
C731	ECEA1HU4R7	E.CAPACITOR 50V 4.7U	1	
C732	ECQM1H223JF	P.CAPACITOR 50V 0.022U	1	
C733	ECUM1H122KBN	C.CAPACITOR CH 50V 1200P	1	
C801	ECEA1CN470S	E.CAPACITOR 16V 47U	1	
C802	ECUM1H182KBN	C.CAPACITOR CH 50V 1800P	1	
C803	ECUM1H821JCN	C.CAPACITOR CH 50V 820P	1	
C804,05	ECUM1H222KBN	C.CAPACITOR CH 50V 2200P	2	
C812	ECEA1HU4R7	E.CAPACITOR 50V 4.7U	1	
C813	ECEA1HU3R3	E.CAPACITOR 50V 3.3U	1	
C814	ECQM1H682JF	P.CAPACITOR 50V 6800P	1	
C815	ECQM1H102JF	P.CAPACITOR 50V 1000P	1	
C816	ECQM1H223JF	P.CAPACITOR 50V 0.022U	1	
C817	ECEA1CU100	E.CAPACITOR 16V 10U	1	
C819	ECEA1HU4R7	E.CAPACITOR 50V 4.7U	1	
C820	ECEA1CU470	E.CAPACITOR 16V 47U	1	
C821	ECQM1H103JF	P.CAPACITOR 50V 0.01U	1	
C822	ECQB1H332JF	P.CAPACITOR 50V 3300P	1	

Ref.No.	Part No.	Part Name & Description	Pcs	Remarks
C823	ECUM1H272KBN	C.CAPACITOR CH 50V 2700P	1	
C824,25	ECUM1H102KBN	C.CAPACITOR CH 50V 1000P	2	
C826	ECEA1CN100S	E.CAPACITOR 16V 10U	1	
C827	ECEA1CU101	E.CAPACITOR 16V 100U	1	
C828	ECUM1E104ZFN	C.CAPACITOR CH 25V 0.1U	1	
C829,30	ECUM1H103KBN	C.CAPACITOR CH 50V 0.01U	2	
C831	ECEA1HU4R7	E.CAPACITOR 50V 4.7U	1	
C832	ECQM1H223JF	P.CAPACITOR 50V 0.022U	1	
C833	ECUM1H122KBN	C.CAPACITOR CH 50V 1200P	1	
C902	ECEA1AU470	E.CAPACITOR 10V 47U	1	
C903	ECUM1E104ZFN	C.CAPACITOR CH 25V 0.1U	1	
C904	ECEA1CU101	E.CAPACITOR 16V 100U	1	
C905	ECUM1E104ZFN	C.CAPACITOR CH 25V 0.1U	1	
C906,07	ECEA1CU101	E.CAPACITOR 16V 100U	2	
C908	ECUM1E104ZFN	C.CAPACITOR CH 25V 0.1U	1	
C909	ECEA1CU101	E.CAPACITOR 16V 100U	1	
C910-12	ECUM1H101JCN	C.CAPACITOR CH 50V 100P	3	
C913-15	ECUM1H151JCN	C.CAPACITOR CH 50V 150P	3	
C916	ECUM1H103KBN	C.CAPACITOR CH 50V 0.01U	1	
C917	ECEA1CU100	E.CAPACITOR 16V 10U	1	
C918	ECUM1E104ZFN	C.CAPACITOR CH 25V 0.1U	1	
C920	ECUM1H151JCN	C.CAPACITOR CH 50V 150P	1	
C921,22	ECUM1H103KBN	C.CAPACITOR CH 50V 0.01U	2	
C923	ECUM1H331JCN	C.CAPACITOR CH 50V 330P	1	
C924	ECEA1HU010	E.CAPACITOR 50V 1U	1	
C925	ECQM1H223JF	P.CAPACITOR 50V 0.022U	1	
C926	ECUM1H103KBN	C.CAPACITOR CH 50V 0.01U	1	
C929	ECUM1H151JCN	C.CAPACITOR CH 50V 150P	1	
C930,31	ECUM1H103KBN	C.CAPACITOR CH 50V 0.01U	2	
C932	ECUM1H271JCN	C.CAPACITOR CH 50V 270P	1	
C933	ECUM1H391JCN	C.CAPACITOR CH 50V 390P	1	
C934,35	ECUM1H103KBN	C.CAPACITOR CH 50V 0.01U	2	
C936	ECEA1CU100	E.CAPACITOR 16V 10U	1	
C937	ECUM1E104ZFN	C.CAPACITOR CH 25V 0.1U	1	
C938-40	ECEA1CU101	E.CAPACITOR 16V 100U	3	
C941	ECEA1HU3R3	E.CAPACITOR 50V 3.3U	1	
C942	ECEA1CU470	E.CAPACITOR 16V 47U	1	
C944	ECUM1H103KBN	C.CAPACITOR CH 50V 0.01U	1	
C945,46	ECEA1CU101	E.CAPACITOR 16V 100U	2	
C947,48	ECEA1HU010	E.CAPACITOR 50V 1U	2	
C949	ECUM1E104ZFN	C.CAPACITOR CH 25V 0.1U	1	
C950	ECEA1CU101	E.CAPACITOR 16V 100U	1	
D1	MA153	DIODE	1	
D2	MA151K	DIODE	1	
D3,D4	MA3024	DIODE	2	
D101	MA151K	DIODE	1	
D301	MA151K	DIODE	1	
D501	MA153	DIODE	1	
D502	MA151WA	DIODE	1	
D552-57	MA153	DIODE	6	
D558-60	MA3100	DIODE	3	
D561-64	MA153	DIODE	4	
D565,66	MA151K	DIODE	2	
D567,68	MA151WK	DIODE	2	
D569	MA151K	DIODE	1	
D570	MA151WK	DIODE	1	
D901	MA151WK	DIODE	1	
D902-04	MA151K	DIODE	3	
D905	MA153	DIODE	1	
FL1	VLQ0142	COIL	1	
FL101	EIR7QH007Q	FILTER	1	
FL102	VLF0829	FILTER	1	
FL103	ELM7Q306A	COIL	1	
FL201	VLQ0190	COIL 4.7MH	1	
FL202	VLQ0402	COIL	1	
FL301	EIR7QH007Q	FILTER	1	
FL302	VLF0829	FILTER	1	
FL303	ELM7Q306A	COIL	1	
FL401	VLQ0190	COIL 4.7MH	1	

Ref.No.		Part No.	Part Name & Description	Pcs	Remarks
FL402		VLQ0402	COIL	1	
FL701		VLF0427	FILTER	1	
FL801		VLF0427	FILTER	1	
FL901		ELB4L053	FILTER	1	
FL902		ELB4M043	FILTER	1	
IC1-C3		UPD4053BG	IC	3	
IC4		NJM4558M	IC	1	
IC5,C6		RC082BM	IC	2	
IC101		AN6558S	IC	1	
IC102		RC4556MB	IC	1	
IC103		UPD4053BG	IC	1	
IC104		NJM4558M	IC	1	
IC105		TEA0666T	IC	1	
IC106		AN78N09	IC	1	
IC107		AN79N09	IC	1	
IC108		NJM4558M	IC	1	
IC201-03		NJM4558M	IC	3	
IC301		AN6558S	IC	1	
IC302		RC4556MB	IC	1	
IC303		UPD4053BG	IC	1	
IC304		NJM4558M	IC	1	
IC305		TEA0666T	IC	1	
IC306		AN78N09	IC	1	
IC307		AN79N09	IC	1	
IC308		NJM4558M	IC	1	
IC401-03		NJM4558M	IC	3	
IC552		MB620412PF	IC	1	
IC553		AN78L20	IC	1	
IC554-56		LM2904M	IC	3	
IC701		NJM4558M	IC	1	
IC703		NJM4558M	IC	1	
IC801		NJM4558M	IC	1	
IC802		UPD4053BG	IC	1	
IC803,04		NJM4558M	IC	2	
IC805		BA7700K1	IC	1	
IC901		AN78L12	IC	1	
IC902		AN78L05	IC	1	
IC903		AN79L09	IC	1	
IC904		AN78L09	IC	1	
L1		E1R7QG010B	IF TRANSFORMER	1	
L101,02		VLQEL05S101K	COIL 100UH	2	
L301,02		VLQEL05S101K	COIL 100UH	2	
L551		VLQEL05S2R2K	COIL 2.2UH	1	
L552		VLQEL05S471K	COIL 470UH	1	
L553,54		VLQEL05S470J	COIL 47UH	2	
L901		VLQEL05S470J	COIL 47UH	1	
L902		VLQEL05S221J	COIL 220UH	1	
L903		VLQEL05S101K	COIL 100UH	1	
L904		VLQEL05S820J	COIL 82UH	1	
L905		VLQEL05S331J	COIL 330UH	1	
L906,07		VLQEL05S101K	COIL 100UH	2	
L909		VLQEL05S271J	COIL 270UH	1	
L910-13		VLQEL05S101K	COIL 100UH	4	
P101		VJP1232R	CONNECTOR(MALE) 5P	1	
P301		VJP1232G	CONNECTOR(MALE)	1	
P551		VJP3080	CONNECTOR (MALE)	1	
P553		VJP1230T	CONNECTOR(MALE) 3P	1	
Q1		2SD602	TRANSISTOR	1	(Q,R)
Q2		UN2113	TRANSISTOR-RESISTOR	1	
Q3		2SA1018-R	TRANSISTOR	1	(R)
Q4,Q5		2SC3478A-K	TRANSISTOR	2	
Q6		2SD602	TRANSISTOR	1	(Q,R)
Q7		2SD1328-R	TRANSISTOR CHIP	1	(Q,R)

Ref.No.		Part No.	Part Name & Description	Pcs	Remarks
Q11		UN2211	TRANSISTOR-RESISTOR	1	
Q12		2SB710	TRANSISTOR	1	
Q13		UN2113	TRANSISTOR-RESISTOR	1	
Q14		2SD1328-R	TRANSISTOR CHIP	1	(Q,R)
Q15		UN2213	TRANSISTOR-RESISTOR	1	
Q101		UN2113	TRANSISTOR-RESISTOR	1	
Q102		UN2213	TRANSISTOR-RESISTOR	1	
Q103-05		2SD601-R	TRANSISTOR CHIP	3	(Q,R)
Q106		UN2213	TRANSISTOR-RESISTOR	1	
Q107		2SD1328-R	TRANSISTOR CHIP	1	(Q,R)
Q108		UN2113	TRANSISTOR-RESISTOR	1	
Q109,10		2SD601-R	TRANSISTOR CHIP	2	(Q,R)
Q111,12		2SD1011	TRANSISTOR	2	
Q113		2SA1018-R	TRANSISTOR	1	(R)
Q114		2SK146	TRANSISTOR	1	(B,L)
Q115		2SD601-R	TRANSISTOR CHIP	1	(Q,R)
Q116		2SB709-R	TRANSISTOR CHIP	1	(Q,R)
Q117		2SD601-R	TRANSISTOR CHIP	1	(Q,R)
Q118-20		UN2213	TRANSISTOR-RESISTOR	3	
Q122		UN2213	TRANSISTOR-RESISTOR	1	
Q201		2SD601-R	TRANSISTOR CHIP	1	(Q,R)
Q202		2SB709-R	TRANSISTOR CHIP	1	(Q,R)
Q203		2SD601-R	TRANSISTOR CHIP	1	(Q,R)
Q204		2SB709-R	TRANSISTOR CHIP	1	(Q,R)
Q205		2SD1328-R	TRANSISTOR CHIP	1	(Q,R)
Q301		UN2113	TRANSISTOR-RESISTOR	1	
Q302		UN2213	TRANSISTOR-RESISTOR	1	
Q303-05		2SD601-R	TRANSISTOR CHIP	3	(Q,R)
Q306		UN2213	TRANSISTOR-RESISTOR	1	
Q307		2SD1328-R	TRANSISTOR CHIP	1	(Q,R)
Q308		UN2113	TRANSISTOR-RESISTOR	1	
Q309,10		2SD601-R	TRANSISTOR CHIP	2	(Q,R)
Q311,12		2SD1011	TRANSISTOR	2	
Q313		2SA1018-R	TRANSISTOR	1	(R)
Q314		2SK146	TRANSISTOR	1	(B,L)
Q315		2SD601-R	TRANSISTOR CHIP	1	(Q,R)
Q316		2SB709-R	TRANSISTOR CHIP	1	(Q,R)
Q317		2SD601-R	TRANSISTOR CHIP	1	(Q,R)
Q318-20		UN2213	TRANSISTOR-RESISTOR	3	
Q322		UN2213	TRANSISTOR-RESISTOR	1	
Q401		2SD601-R	TRANSISTOR CHIP	1	(Q,R)
Q402		2SB709-R	TRANSISTOR CHIP	1	(Q,R)
Q403		2SD601-R	TRANSISTOR CHIP	1	(Q,R)
Q404		2SB709-R	TRANSISTOR CHIP	1	(Q,R)
Q405		2SD1328-R	TRANSISTOR CHIP	1	(Q,R)
Q501		2SB709-R	TRANSISTOR CHIP	1	(Q,R)
Q502		UN2113	TRANSISTOR-RESISTOR	1	
Q551-62		UN2213	TRANSISTOR-RESISTOR	12	
Q563,64		UN2113	TRANSISTOR-RESISTOR	2	
Q565-68		2SC2295-B	TRANSISTOR CHIP	4	(B,C)
Q571		2SC2497	TRANSISTOR	1	
Q572		2SB710	TRANSISTOR	1	
Q573,74		2SD1994AQRTA	TRANSISTOR	2	
Q575		2SC2497	TRANSISTOR	1	
Q576		2SB710	TRANSISTOR	1	
Q577,78		2SD1994AQRTA	TRANSISTOR	2	
Q579		2SD1992A	TRANSISTOR	1	
Q580		2SB710	TRANSISTOR	1	
Q581,82		2SD1994AQRTA	TRANSISTOR	2	
Q583		2SB710	TRANSISTOR	1	
Q584,85		2SD1328-R	TRANSISTOR CHIP	2	(Q,R)
Q586		2SD1992A	TRANSISTOR	1	
Q587		2SB710	TRANSISTOR	1	
Q588,89		2SD1994AQRTA	TRANSISTOR	2	
Q590		2SB710	TRANSISTOR	1	
Q591,92		2SD1328-R	TRANSISTOR CHIP	2	(Q,R)
Q593		2SC2497	TRANSISTOR	1	
Q594		2SB710	TRANSISTOR	1	
Q595,96		2SD1994AQRTA	TRANSISTOR	2	
Q597		2SD1992A	TRANSISTOR	1	
Q598		2SB710	TRANSISTOR	1	
Q599,00		2SD1994AQRTA	TRANSISTOR	2	
Q601		2SB710	TRANSISTOR	1	
Q602,03		2SD1328-R	TRANSISTOR CHIP	2	(Q,R)
Q604		UN2213	TRANSISTOR-RESISTOR	1	

Ref.No.	Part No.	Part Name & Description	Pcs	Remarks
Q605	2SB710	TRANSISTOR	1	
Q606	2SD1992A	TRANSISTOR	1	
Q607	2SB710	TRANSISTOR	1	
Q608,09	2SD1994AQRTA	TRANSISTOR	2	
Q610	2SB710	TRANSISTOR	1	
Q611,12	2SD1328-R	TRANSISTOR CHIP	2	(Q,R)
Q613	UN2213	TRANSISTOR-RESISTOR	1	
Q614	2SB710	TRANSISTOR	1	
Q615	2SD1992A	TRANSISTOR	1	
Q616	2SB710	TRANSISTOR	1	
Q617,18	2SD1994AQRTA	TRANSISTOR	2	
Q619-27	UN2213	TRANSISTOR-RESISTOR	9	
Q701	2SD1328-R	TRANSISTOR CHIP	1	(Q,R)
Q702	2SD601-R	TRANSISTOR CHIP	1	(Q,R)
Q801	2SD1328-R	TRANSISTOR CHIP	1	(Q,R)
Q802	2SD601-R	TRANSISTOR CHIP	1	(Q,R)
Q901	UN2113	TRANSISTOR-RESISTOR	1	
Q902-04	UN2213	TRANSISTOR-RESISTOR	3	
Q909	2SC2404-B	TRANSISTOR CHIP	1	(B,C)
Q910,11	2SD601-R	TRANSISTOR CHIP	2	(Q,R)
Q912	2SC2404-B	TRANSISTOR CHIP	1	(B,C)
Q913,14	2SD601-R	TRANSISTOR CHIP	2	(Q,R)
Q915	2SC2404-B	TRANSISTOR CHIP	1	(B,C)
Q916,17	2SD601-R	TRANSISTOR CHIP	2	(Q,R)
Q920	UN2113	TRANSISTOR-RESISTOR	1	
		RESISTORS		
R1	ERJ6GEYJ102	M.RESISTOR CH 1/10W 1K	1	
R2	ERJ6GEYG223	M.RESISTOR CH 1/10W 22K	1	
R3,R4	ERJ6GEYJ473	M.RESISTOR CH 1/10W 47K	2	
R5	ERJ6GEYJ472	M.RESISTOR CH 1/10W 4.7K	1	
R6,R7	ERJ6GEYJ103	M.RESISTOR CH 1/10W 10K	2	
R8	ERJ6GEYJ104	M.RESISTOR CH 1/10W 100K	1	
R9	ERJ6GEYJ472	M.RESISTOR CH 1/10W 4.7K	1	
R10	ERJ6GEYJ471	M.RESISTOR CH 1/10W 470	1	
R11	ERJ6GEYJ222	M.RESISTOR CH 1/10W 2.2K	1	
R12	ERJ6GEYJ100	M.RESISTOR CH 1/10W 10	1	
R13	ERJ6GEYJ473	M.RESISTOR CH 1/10W 47K	1	
R14	ERJ6GEYJ102	M.RESISTOR CH 1/10W 1K	1	
R15	ERJ6GEY0R00	M.RESISTOR CH 1/10W 0	1	
R16	ERJ6GEYJ224	M.RESISTOR CH 1/10W 220K	1	
R17	ERJ6GEYJ562	M.RESISTOR CH 1/10W 5.6K	1	
R18	ERJ6GEYJ473	M.RESISTOR CH 1/10W 47K	1	
R19	ERJ6GEYJ331	M.RESISTOR CH 1/10W 330	1	
R20	ERJ6GEYJ473	M.RESISTOR CH 1/10W 47K	1	
R21	ERJ6GEYJ123	M.RESISTOR CH 1/10W 12K	1	
R22	ERJ6GEYJ104	M.RESISTOR CH 1/10W 100K	1	
R23	ERJ6GEYJ102	M.RESISTOR CH 1/10W 1K	1	
R24	ERJ6GEYJ470	M.RESISTOR CH 1/10W 47	1	
R25	ERJ6GEYJ332	M.RESISTOR CH 1/10W 3.3K	1	
R26	ERJ6GEYJ473	M.RESISTOR CH 1/10W 47K	1	
R27	ERJ6GEYJ472	M.RESISTOR CH 1/10W 4.7K	1	
R29	ERJ6GEYJ470	M.RESISTOR CH 1/10W 47	1	
R30	ERJ6GEYJ102	M.RESISTOR CH 1/10W 1K	1	
R39	ERJ6GEYJ104	M.RESISTOR CH 1/10W 100K	1	
R42,43	ERJ6GEYG223	M.RESISTOR CH 1/10W 22K	2	
R44	ERJ6GEYJ104	M.RESISTOR CH 1/10W 100K	1	
R49	ERJ6GEYJ103	M.RESISTOR CH 1/10W 10K	1	
R50	ERJ6GEYG223	M.RESISTOR CH 1/10W 22K	1	
R51	ERJ6GEYJ103	M.RESISTOR CH 1/10W 10K	1	
R53	ERJ6GEY0R00	M.RESISTOR CH 1/10W 0	1	
R55	ERJ6GEYJ682	M.RESISTOR CH 1/10W 6.8K	1	
R101,02	ERJ6GEYJ103	M.RESISTOR CH 1/10W 10K	2	
R104,05	ERJ6GEYG223	M.RESISTOR CH 1/10W 22K	2	
R106	ERJ6GEYJ103	M.RESISTOR CH 1/10W 10K	1	
R107	ERJ6GEYJ153	M.RESISTOR CH 1/10W 15K	1	
R108	ERJ6GEYJ681	M.RESISTOR CH 1/10W 680	1	
R109	ERJ6GEYJ470	M.RESISTOR CH 1/10W 47	1	
R110	ERJ6GEYJ102	M.RESISTOR CH 1/10W 1K	1	
R111	ERJ6GEYJ393	M.RESISTOR CH 1/10W 39K	1	
R112	ERJ6GEYJ104	M.RESISTOR CH 1/10W 100K	1	
R113	ERJ6GEYJ102	M.RESISTOR CH 1/10W 1K	1	
R114	ERJ6GEYJ332	M.RESISTOR CH 1/10W 3.3K	1	

Ref.No.	Part No.	Part Name & Description	Pcs	Remarks
R115	ERJ6GEYJ103	M.RESISTOR CH 1/10W 10K	1	
R116	ERJ6GEYJ332	M.RESISTOR CH 1/10W 3.3K	1	
R117	ERJ6GEYJ102	M.RESISTOR CH 1/10W 1K	1	
R118-20	ERJ6GEYJ104	M.RESISTOR CH 1/10W 100K	3	
R121	ERJ6GEYJ102	M.RESISTOR CH 1/10W 1K	1	
R122	ERJ6GEYJ103	M.RESISTOR CH 1/10W 10K	1	
R123	ERJ6GEYJ102	M.RESISTOR CH 1/10W 1K	1	
R124	ERJ6GEYG112	M.RESISTOR CH 1/10W 1.1K	1	
R125	ERJ6GEY0R00	M.RESISTOR CH 1/10W 0	1	
R126	ERJ6GEYJ104	M.RESISTOR CH 1/10W 100K	1	
R127	ERJ6GEYJ102	M.RESISTOR CH 1/10W 1K	1	
R128	ERJ6GEYJ123	M.RESISTOR CH 1/10W 12K	1	
R129	ERJ6GEYJ104	M.RESISTOR CH 1/10W 100K	1	
R130	ERJ6GEYJ103	M.RESISTOR CH 1/10W 10K	1	
R131	ERJ6GEYJ100	M.RESISTOR CH 1/10W 10	1	
R133,34	ERJ6GEYG223	M.RESISTOR CH 1/10W 22K	2	
R135	ERJ6GEYJ472	M.RESISTOR CH 1/10W 4.7K	1	
R136	ERJ6GEYJ561	M.RESISTOR CH 1/10W 560	1	
R137	ERJ6GEYJ332	M.RESISTOR CH 1/10W 3.3K	1	
R138,39	VRE0034E272	M.RESISTOR CH 1/10W 2.7K	2	
R140	ERJ6GEYJ103	M.RESISTOR CH 1/10W 10K	1	
R141	VRE0034E473	M.RESISTOR CH 1/10W 47K	1	
R142	VRE0034E272	M.RESISTOR CH 1/10W 2.7K	1	
R143	VRE0034E470	M.RESISTOR CH 1/10W 47	1	
R144	VRE0034E104	M.RESISTOR CH 1/10W 100K	1	
R145	ERJ6GEYJ102	M.RESISTOR CH 1/10W 1K	1	
R146	ERJ6GEYJ333	M.RESISTOR CH 1/10W 33K	1	
R147	ERJ6GEYJ103	M.RESISTOR CH 1/10W 10K	1	
R148,49	ERJ6GEYJ102	M.RESISTOR CH 1/10W 1K	2	
R150	ERJ6GEYG223	M.RESISTOR CH 1/10W 22K	1	
R151	ERJ6GEYJ102	M.RESISTOR CH 1/10W 1K	1	
R152	ERJ6GEYJ103	M.RESISTOR CH 1/10W 10K	1	
R153	ERJ6GEYJ221	M.RESISTOR CH 1/10W 220	1	
R154	ERJ6GEYJ101	M.RESISTOR CH 1/10W 100	1	
R155	ERJ6GEYJ272	M.RESISTOR CH 1/10W 2.7K	1	
R156	ERJ6GEYJ332	M.RESISTOR CH 1/10W 3.3K	1	
R157	VRE0034E102	M.RESISTOR CH 1/10W 1K	1	
R158	VRE0034E332	M.RESISTOR CH 1/10W 3.3K	1	
R159	ERJ6GEYJ221	M.RESISTOR CH 1/10W 220	1	
R160	VRE0034E823	M.RESISTOR CH 1/10W 82K	1	
R161	VRE0034E333	M.RESISTOR CH 1/10W 33K	1	
R162	VRE0034E823	M.RESISTOR CH 1/10W 82K	1	
R163	ERJ6GEYJ104	M.RESISTOR CH 1/10W 100K	1	
R164	VRE0034E683	M.RESISTOR CH 1/10W 68K	1	
R165	VRE0034E222	M.RESISTOR CH 1/10W 2.2K	1	
R166	VRE0034E512	M.RESISTOR CH 1/10W 5.1K	1	
R167	VRE0034E822	M.RESISTOR CH 1/10W 8.2K	1	
R168	VRE0034E203	M.RESISTOR CH 1/10W 20K	1	
R169	VRE0034E911	M.RESISTOR CH 1/10W 910	1	
R201	ERJ6GEYJ104	M.RESISTOR CH 1/10W 100K	1	
R202	ERJ6GEYJ103	M.RESISTOR CH 1/10W 10K	1	
R204	ERJ6GEYJ103	M.RESISTOR CH 1/10W 10K	1	
R205	ERJ6GEYJ332	M.RESISTOR CH 1/10W 3.3K	1	
R206	ERJ6GEYJ183	M.RESISTOR CH 1/10W 18K	1	
R207	ERJ6GEYJ132	M.RESISTOR CH 1/10W 1.3K	1	
R208	ERJ6GEYJ183	M.RESISTOR CH 1/10W 18K	1	
R209	ERJ6GEYG223	M.RESISTOR CH 1/10W 22K	1	
R210-12	ERJ6GEYJ104	M.RESISTOR CH 1/10W 100K	3	
R213	ERJ6GEYG223	M.RESISTOR CH 1/10W 22K	1	
R214	ERJ6GEYJ152	M.RESISTOR CH 1/10W 1.5K	1	
R215	ERJ6GEYJ332	M.RESISTOR CH 1/10W 3.3K	1	
R216	ERJ6GEYJ102	M.RESISTOR CH 1/10W 1K	1	
R217	ERJ6GEYJ104	M.RESISTOR CH 1/10W 100K	1	
R218	ERJ6GEYJ103	M.RESISTOR CH 1/10W 10K	1	
R219	ERJ6GEYJ472	M.RESISTOR CH 1/10W 4.7K	1	
R220	ERJ6GEYJ682	M.RESISTOR CH 1/10W 6.8K	1	
R221	ERJ6GEYJ471	M.RESISTOR CH 1/10W 470	1	
R222	ERJ6GEYJ102	M.RESISTOR CH 1/10W 1K	1	
R223	ERJ6GEYJ392	M.RESISTOR CH 1/10W 3.9K	1	
R224,25	ERJ6GEYJ103	M.RESISTOR CH 1/10W 10K	2	
R226	ERJ6GEYJ102	M.RESISTOR CH 1/10W 1K	1	
R227	ERJ6GEYJ183	M.RESISTOR CH 1/10W 18K	1	
R228	ERJ6GEYJ332	M.RESISTOR CH 1/10W 3.3K	1	
R229	ERJ6GEYJ103	M.RESISTOR CH 1/10W 10K	1	
R230	ERJ6GEYJ102	M.RESISTOR CH 1/10W 1K	1	

Ref.No.	Part No.	Part Name & Description	Pcs	Remarks
R231	ERJ6GEYJ103	M.RESISTOR CH 1/10W 10K	1	
R232	ERJ6GEYJ272	M.RESISTOR CH 1/10W 2.7K	1	
R233	ERJ6GEYJ561	M.RESISTOR CH 1/10W 560	1	
R235	ERJ6GEYJ103	M.RESISTOR CH 1/10W 10K	1	
R236	ERJ6GEYJ331	M.RESISTOR CH 1/10W 330	1	
R301,02	ERJ6GEYJ103	M.RESISTOR CH 1/10W 10K	2	
R304	ERJ6GEYG223	M.RESISTOR CH 1/10W 22K	1	
R306	ERJ6GEYJ103	M.RESISTOR CH 1/10W 10K	1	
R307	ERJ6GEYJ153	M.RESISTOR CH 1/10W 15K	1	
R308	ERJ6GEYJ681	M.RESISTOR CH 1/10W 680	1	
R309	ERJ6GEYJ470	M.RESISTOR CH 1/10W 47	1	
R310	ERJ6GEYJ102	M.RESISTOR CH 1/10W 1K	1	
R311	ERJ6GEYJ393	M.RESISTOR CH 1/10W 39K	1	
R312	ERJ6GEYJ104	M.RESISTOR CH 1/10W 100K	1	
R313	ERJ6GEYJ102	M.RESISTOR CH 1/10W 1K	1	
R314	ERJ6GEYJ332	M.RESISTOR CH 1/10W 3.3K	1	
R315	ERJ6GEYJ103	M.RESISTOR CH 1/10W 10K	1	
R316	ERJ6GEYJ332	M.RESISTOR CH 1/10W 3.3K	1	
R317	ERJ6GEYJ102	M.RESISTOR CH 1/10W 1K	1	
R318-20	ERJ6GEYJ104	M.RESISTOR CH 1/10W 100K	3	
R321	ERJ6GEYJ102	M.RESISTOR CH 1/10W 1K	1	
R322	ERJ6GEYJ103	M.RESISTOR CH 1/10W 10K	1	
R323	ERJ6GEYJ102	M.RESISTOR CH 1/10W 1K	1	
R324	ERJ6GEYG112	M.RESISTOR CH 1/10W 1.1K	1	
R325	ERJ6GEYOR00	M.RESISTOR CH 1/10W 0	1	
R326	ERJ6GEYJ104	M.RESISTOR CH 1/10W 100K	1	
R327	ERJ6GEYJ102	M.RESISTOR CH 1/10W 1K	1	
R328	ERJ6GEYJ123	M.RESISTOR CH 1/10W 12K	1	
R329	ERJ6GEYJ104	M.RESISTOR CH 1/10W 100K	1	
R330	ERJ6GEYJ103	M.RESISTOR CH 1/10W 10K	1	
R331	ERJ6GEYJ100	M.RESISTOR CH 1/10W 10	1	
R333,34	ERJ6GEYG223	M.RESISTOR CH 1/10W 22K	2	
R335	ERJ6GEYJ472	M.RESISTOR CH 1/10W 4.7K	1	
R336	ERJ6GEYJ561	M.RESISTOR CH 1/10W 560	1	
R337	ERJ6GEYJ332	M.RESISTOR CH 1/10W 3.3K	1	
R338,39	VRE0034E272	M.RESISTOR CH 1/10W 2.7K	2	
R340	ERJ6GEYJ103	M.RESISTOR CH 1/10W 10K	1	
R341	VRE0034E473	M.RESISTOR CH 1/10W 47K	1	
R342	VRE0034E272	M.RESISTOR CH 1/10W 2.7K	1	
R343	VRE0034E470	M.RESISTOR CH 1/10W 47	1	
R344	VRE0034E104	M.RESISTOR CH 1/10W 100K	1	
R345	ERJ6GEYJ102	M.RESISTOR CH 1/10W 1K	1	
R346	ERJ6GEYJ333	M.RESISTOR CH 1/10W 33K	1	
R347	ERJ6GEYJ103	M.RESISTOR CH 1/10W 10K	1	
R348,49	ERJ6GEYJ102	M.RESISTOR CH 1/10W 1K	2	
R350	ERJ6GEYG223	M.RESISTOR CH 1/10W 22K	1	
R351	ERJ6GEYJ102	M.RESISTOR CH 1/10W 1K	1	
R352	ERJ6GEYJ103	M.RESISTOR CH 1/10W 10K	1	
R353	ERJ6GEYJ221	M.RESISTOR CH 1/10W 220	1	
R354	ERJ6GEYJ101	M.RESISTOR CH 1/10W 100	1	
R355	ERJ6GEYJ272	M.RESISTOR CH 1/10W 2.7K	1	
R356	ERJ6GEYJ332	M.RESISTOR CH 1/10W 3.3K	1	
R357	VRE0034E102	M.RESISTOR CH 1/10W 1K	1	
R358	VRE0034E332	M.RESISTOR CH 1/10W 3.3K	1	
R359	ERJ6GEYJ221	M.RESISTOR CH 1/10W 220	1	
R360	VRE0034E823	M.RESISTOR CH 1/10W 82K	1	
R361	VRE0034E333	M.RESISTOR CH 1/10W 33K	1	
R362	VRE0034E823	M.RESISTOR CH 1/10W 82K	1	
R363	ERJ6GEYJ104	M.RESISTOR CH 1/10W 100K	1	
R364	VRE0034E683	M.RESISTOR CH 1/10W 68K	1	
R365	VRE0034E222	M.RESISTOR CH 1/10W 2.2K	1	
R366	VRE0034E512	M.RESISTOR CH 1/10W 5.1K	1	
R367	VRE0034E822	M.RESISTOR CH 1/10W 8.2K	1	
R368	VRE0034E203	M.RESISTOR CH 1/10W 20K	1	
R369	VRE0034E911	M.RESISTOR CH 1/10W 910	1	
R401	ERJ6GEYJ104	M.RESISTOR CH 1/10W 100K	1	
R402-04	ERJ6GEYJ103	M.RESISTOR CH 1/10W 10K	3	
R405	ERJ6GEYJ332	M.RESISTOR CH 1/10W 3.3K	1	
R406	ERJ6GEYJ183	M.RESISTOR CH 1/10W 18K	1	
R407	ERJ6GEYJ132	M.RESISTOR CH 1/10W 1.3K	1	
R408	ERJ6GEYJ183	M.RESISTOR CH 1/10W 18K	1	
R409	ERJ6GEYG223	M.RESISTOR CH 1/10W 22K	1	
R410-12	ERJ6GEYJ104	M.RESISTOR CH 1/10W 100K	3	
R413	ERJ6GEYG223	M.RESISTOR CH 1/10W 22K	1	
R414	ERJ6GEYJ152	M.RESISTOR CH 1/10W 1.5K	1	

Ref.No.	Part No.	Part Name & Description	Pcs	Remarks
R415	ERJ6GEYJ332	M.RESISTOR CH 1/10W 3.3K	1	
R416	ERJ6GEYJ102	M.RESISTOR CH 1/10W 1K	1	
R417	ERJ6GEYJ104	M.RESISTOR CH 1/10W 100K	1	
R418	ERJ6GEYJ103	M.RESISTOR CH 1/10W 10K	1	
R419	ERJ6GEYJ472	M.RESISTOR CH 1/10W 4.7K	1	
R420	ERJ6GEYJ682	M.RESISTOR CH 1/10W 6.8K	1	
R421	ERJ6GEYJ471	M.RESISTOR CH 1/10W 470	1	
R422	ERJ6GEYJ102	M.RESISTOR CH 1/10W 1K	1	
R423	ERJ6GEYJ392	M.RESISTOR CH 1/10W 3.9K	1	
R424,25	ERJ6GEYJ103	M.RESISTOR CH 1/10W 10K	2	
R426	ERJ6GEYJ102	M.RESISTOR CH 1/10W 1K	1	
R427	ERJ6GEYJ183	M.RESISTOR CH 1/10W 18K	1	
R428	ERJ6GEYJ332	M.RESISTOR CH 1/10W 3.3K	1	
R429	ERJ6GEYJ103	M.RESISTOR CH 1/10W 10K	1	
R430	ERJ6GEYJ102	M.RESISTOR CH 1/10W 1K	1	
R431	ERJ6GEYJ103	M.RESISTOR CH 1/10W 10K	1	
R432	ERJ6GEYJ272	M.RESISTOR CH 1/10W 2.7K	1	
R433	ERJ6GEYJ561	M.RESISTOR CH 1/10W 560	1	
R435	ERJ6GEYJ103	M.RESISTOR CH 1/10W 10K	1	
R436	ERJ6GEYJ331	M.RESISTOR CH 1/10W 330	1	
R501	ERJ6GEYJ103	M.RESISTOR CH 1/10W 10K	1	
R502,03	ERJ6GEYG223	M.RESISTOR CH 1/10W 22K	2	
R508	ERJ6GEYJ103	M.RESISTOR CH 1/10W 10K	1	
R509	ERJ6GEYG223	M.RESISTOR CH 1/10W 22K	1	
R551	ERJ6GEYG223	M.RESISTOR CH 1/10W 22K	1	
R552	ERJ6GEYJ103	M.RESISTOR CH 1/10W 10K	1	
R553	ERJ6GEYJ102	M.RESISTOR CH 1/10W 1K	1	
R554	ERJ6GEYJ330	M.RESISTOR CH 1/10W 33	1	
R555	ERJ6GEYJ103	M.RESISTOR CH 1/10W 10K	1	
R556	ERJ6GEYJ473	M.RESISTOR CH 1/10W 47K	1	
R557	ERJ6GEYJ330	M.RESISTOR CH 1/10W 33	1	
R558	ERJ6GEYJ103	M.RESISTOR CH 1/10W 10K	1	
R559	ERJ6GEYJ392	M.RESISTOR CH 1/10W 3.9K	1	
R560	ERJ6GEYJ101	M.RESISTOR CH 1/10W 100	1	
R561	ERJ6GEYJ103	M.RESISTOR CH 1/10W 10K	1	
R563	ERJ6GEYJ101	M.RESISTOR CH 1/10W 100	1	
R564	ERJ6GEYJ105	M.RESISTOR CH 1/10W 1M	1	
R565	ERJ6GEYOR00	M.RESISTOR CH 1/10W 0	1	
R567	ERJ6GEYOR00	M.RESISTOR CH 1/10W 0	1	
R569	ERJ6GEYOR00	M.RESISTOR CH 1/10W 0	1	
R570	ERJ6GEYJ682	M.RESISTOR CH 1/10W 6.8K	1	
R571	ERJ6GEYJ333	M.RESISTOR CH 1/10W 33K	1	
R572,73	ERJ6GEYJ220	M.RESISTOR CH 1/10W 22	2	
R574	ERDS2TJ8R2	C.RESISTOR 1/4W 8.2	1	
R575	ERJ6GEYJ682	M.RESISTOR CH 1/10W 6.8K	1	
R576	ERJ6GEYJ333	M.RESISTOR CH 1/10W 33K	1	
R577,78	ERJ6GEYJ220	M.RESISTOR CH 1/10W 22	2	
R579	ERDS2TJ8R2	C.RESISTOR 1/4W 8.2	1	
R580	ERJ6GEYJ472	M.RESISTOR CH 1/10W 4.7K	1	
R581	ERJ6GEYJ683	M.RESISTOR CH 1/10W 68K	1	
R582	ERJ6GEYJ103	M.RESISTOR CH 1/10W 10K	1	
R583	ERJ6GEYJ824	M.RESISTOR CH 1/10W 820K	1	
R584,85	ERJ6GEYJ220	M.RESISTOR CH 1/10W 22	2	
R586,87	ERJ6GEYJ273	M.RESISTOR CH 1/10W 27K	2	
R588	ERDS2TJ100	C.RESISTOR 1/4W 10	1	
R589	ERJ6GEYJ103	M.RESISTOR CH 1/10W 10K	1	
R590,91	ERJ6GEYJ222	M.RESISTOR CH 1/10W 2.2K	2	
R592	ERJ6GEYK1R0	M.RESISTOR CH 1/10W 1	1	
R593	ERJ6GEYJ472	M.RESISTOR CH 1/10W 4.7K	1	
R594	ERJ6GEYJ683	M.RESISTOR CH 1/10W 68K	1	
R595	ERJ6GEYJ103	M.RESISTOR CH 1/10W 10K	1	
R596	ERJ6GEYJ824	M.RESISTOR CH 1/10W 820K	1	
R597,98	ERJ6GEYJ220	M.RESISTOR CH 1/10W 22	2	
R599,00	ERJ6GEYJ273	M.RESISTOR CH 1/10W 27K	2	
R601	ERDS2TJ100	C.RESISTOR 1/4W 10	1	
R602	ERJ6GEYJ103	M.RESISTOR CH 1/10W 10K	1	
R603,04	ERJ6GEYJ222	M.RESISTOR CH 1/10W 2.2K	2	
R605	ERJ6GEYK1R0	M.RESISTOR CH 1/10W 1	1	
R606	ERJ6GEYJ472	M.RESISTOR CH 1/10W 4.7K	1	
R607	ERJ6GEYJ333	M.RESISTOR CH 1/10W 33K	1	
R608,09	ERJ6GEYJ220	M.RESISTOR CH 1/10W 22	2	
R610,11	ERJ6GEYJ224	M.RESISTOR CH 1/10W 220K	2	
R612	ERDS2TJ470	C.RESISTOR 1/4W 47	1	
R613	ERJ6GEYJ103	M.RESISTOR CH 1/10W 10K	1	
R614	ERJ6GEYJ683	M.RESISTOR CH 1/10W 68K	1	

Ref.No.	Part No.	Part Name & Description	Pcs	Remarks
R615	ERJ6GEYJ103	M.RESISTOR CH 1/10W 10K	1	
R616	ERJ6GEYJ824	M.RESISTOR CH 1/10W 820K	1	
R617,18	ERJ6GEYJ220	M.RESISTOR CH 1/10W 22	2	
R619,20	ERJ6GEYJ104	M.RESISTOR CH 1/10W 100K	2	
R621	ERDS2TJ6R8	C.RESISTOR 1/4W 6.8	1	
R622	ERJ6GEYJ103	M.RESISTOR CH 1/10W 10K	1	
R623,24	ERJ6GEYJ222	M.RESISTOR CH 1/10W 2.2K	2	
R625	ERJ6GEYK1R0	M.RESISTOR CH 1/10W 1	1	
R626	ERJ6GEYJ184	M.RESISTOR CH 1/10W 180K	1	
R627,28	ERJ6GEYJ103	M.RESISTOR CH 1/10W 10K	2	
R629,30	ERJ6GEYJ220	M.RESISTOR CH 1/10W 22	2	
R631,32	ERJ6GEYJ104	M.RESISTOR CH 1/10W 100K	2	
R633	ERDS2TJ6R8	C.RESISTOR 1/4W 6.8	1	
R634	ERJ6GEYJ103	M.RESISTOR CH 1/10W 10K	1	
R635,36	ERJ6GEYJ222	M.RESISTOR CH 1/10W 2.2K	2	
R637	ERJ6GEYK1R0	M.RESISTOR CH 1/10W 1	1	
R638	ERJ6GEYJ184	M.RESISTOR CH 1/10W 180K	1	
R639,40	ERJ6GEYJ103	M.RESISTOR CH 1/10W 10K	2	
R641,42	ERJ6GEYJ220	M.RESISTOR CH 1/10W 22	2	
R643,44	ERJ6GEYJ104	M.RESISTOR CH 1/10W 100K	2	
R645	ERDS2TJ6R8	C.RESISTOR 1/4W 6.8	1	
R646	ERJ6GEYK1R0	M.RESISTOR CH 1/10W 1	1	
R647-50	ERJ6GEYJ823	M.RESISTOR CH 1/10W 82K	4	
R651,52	ERJ6GEYJ103	M.RESISTOR CH 1/10W 10K	2	
R655,56	ERJ6GEY0R00	M.RESISTOR CH 1/10W 0	2	
R657	ERJ6GEYJ102	M.RESISTOR CH 1/10W 1K	1	
R658	ERJ6GEY0R00	M.RESISTOR CH 1/10W 0	1	
R659	ERJ6GEYJ472	M.RESISTOR CH 1/10W 4.7K	1	
R660,61	ERJ6GEYG223	M.RESISTOR CH 1/10W 22K	2	
R662,63	ERJ6GEY0R00	M.RESISTOR CH 1/10W 0	2	
R664,65	ERJ6GEYJ392	M.RESISTOR CH 1/10W 3.9K	2	
R666	ERJ6GEYJ332	M.RESISTOR CH 1/10W 3.3K	1	
R667	ERJ6GEYJ473	M.RESISTOR CH 1/10W 47K	1	
R668,69	ERJ6GEYG223	M.RESISTOR CH 1/10W 22K	2	
R670-73	ERJ6GEYJ102	M.RESISTOR CH 1/10W 1K	4	
R677-79	ERJ6GEYJ101	M.RESISTOR CH 1/10W 100	3	
R680-82	ERJ6GEYG223	M.RESISTOR CH 1/10W 22K	3	
R701	ERJ6GEYJ104	M.RESISTOR CH 1/10W 100K	1	
R702,03	ERJ6GEYJ332	M.RESISTOR CH 1/10W 3.3K	2	
R704	ERJ6GEYJ102	M.RESISTOR CH 1/10W 1K	1	
R705	ERJ6GEYJ272	M.RESISTOR CH 1/10W 2.7K	1	
R706	ERJ6GEYJ102	M.RESISTOR CH 1/10W 1K	1	
R707,08	ERJ6GEYJ104	M.RESISTOR CH 1/10W 100K	2	
R709	ERJ6GEYJ472	M.RESISTOR CH 1/10W 4.7K	1	
R710	ERJ6GEYJ682	M.RESISTOR CH 1/10W 6.8K	1	
R718	ERJ6GEYJ272	M.RESISTOR CH 1/10W 2.7K	1	
R719,20	ERJ6GEYJ332	M.RESISTOR CH 1/10W 3.3K	2	
R728,29	ERJ6GEYJ821	M.RESISTOR CH 1/10W 820	2	
R730	ERJ6GEYJ681	M.RESISTOR CH 1/10W 680	1	
R731	ERJ6GEY0R00	M.RESISTOR CH 1/10W 0	1	
R732	ERJ6GEYG112	M.RESISTOR CH 1/10W 1.1K	1	
R733	ERJ6GEYJ103	M.RESISTOR CH 1/10W 10K	1	
R734	ERJ6GEYJ183	M.RESISTOR CH 1/10W 18K	1	
R735	ERJ6GEYJ562	M.RESISTOR CH 1/10W 5.6K	1	
R736	ERJ6GEYJ104	M.RESISTOR CH 1/10W 100K	1	
R737,38	ERJ6GEYJ122	M.RESISTOR CH 1/10W 1.2K	2	
R739	VRE0034E362	M.RESISTOR CH 1/10W 3.6K	1	
R740	ERJ6GEYJ122	M.RESISTOR CH 1/10W 1.2K	1	
R741,42	ERJ6GEYJ103	M.RESISTOR CH 1/10W 10K	2	
R743-45	ERJ6GEYJ473	M.RESISTOR CH 1/10W 47K	3	
R801	ERJ6GEYJ104	M.RESISTOR CH 1/10W 100K	1	
R802,03	ERJ6GEYJ332	M.RESISTOR CH 1/10W 3.3K	2	
R804	ERJ6GEYJ102	M.RESISTOR CH 1/10W 1K	1	
R805	ERJ6GEYJ272	M.RESISTOR CH 1/10W 2.7K	1	
R806	ERJ6GEYJ102	M.RESISTOR CH 1/10W 1K	1	
R807,08	ERJ6GEYJ104	M.RESISTOR CH 1/10W 100K	2	
R809	ERJ6GEYJ472	M.RESISTOR CH 1/10W 4.7K	1	
R810	ERJ6GEYJ682	M.RESISTOR CH 1/10W 6.8K	1	
R818	ERJ6GEYJ272	M.RESISTOR CH 1/10W 2.7K	1	
R819,20	ERJ6GEYJ332	M.RESISTOR CH 1/10W 3.3K	2	
R828,29	ERJ6GEYJ821	M.RESISTOR CH 1/10W 820	2	
R830	ERJ6GEYJ681	M.RESISTOR CH 1/10W 680	1	
R831	ERJ6GEY0R00	M.RESISTOR CH 1/10W 0	1	
R832	ERJ6GEYG112	M.RESISTOR CH 1/10W 1.1K	1	
R833	ERJ6GEYJ103	M.RESISTOR CH 1/10W 10K	1	

Ref.No.	Part No.	Part Name & Description	Pcs	Remarks
R834	ERJ6GEYJ183	M.RESISTOR CH 1/10W 18K	1	
R835	ERJ6GEYJ562	M.RESISTOR CH 1/10W 5.6K	1	
R836	ERJ6GEYJ104	M.RESISTOR CH 1/10W 100K	1	
R837,38	ERJ6GEYJ122	M.RESISTOR CH 1/10W 1.2K	2	
R839	VRE0034E362	M.RESISTOR CH 1/10W 3.6K	1	
R840	ERJ6GEYJ122	M.RESISTOR CH 1/10W 1.2K	1	
R841,42	ERJ6GEYJ103	M.RESISTOR CH 1/10W 10K	2	
R843,44	ERJ6GEYJ473	M.RESISTOR CH 1/10W 47K	2	
R845	ERJ6GEYJ273	M.RESISTOR CH 1/10W 27K	1	
R901	ERJ6GEYG223	M.RESISTOR CH 1/10W 22K	1	
R904	ERJ6GEYJ103	M.RESISTOR CH 1/10W 10K	1	
R905	ERJ6GEYG223	M.RESISTOR CH 1/10W 22K	1	
R906	ERJ6GEYJ102	M.RESISTOR CH 1/10W 1K	1	
R907	ERJ6GEYJ103	M.RESISTOR CH 1/10W 10K	1	
R909	ERJ6GEYJ101	M.RESISTOR CH 1/10W 100	1	
R910	ERJ6GEYJ103	M.RESISTOR CH 1/10W 10K	1	
R914	ERJ6GEYJ104	M.RESISTOR CH 1/10W 100K	1	
R917,18	ERJ6GEYJ561	M.RESISTOR CH 1/10W 560	2	
R919,20	ERJ6GEYJ222	M.RESISTOR CH 1/10W 2.2K	2	
R921	VRE0034E223	M.RESISTOR CH 1/10W 22K	1	
R922,23	ERJ6GEYJ104	M.RESISTOR CH 1/10W 100K	2	
R924	ERJ6GEYJ393	M.RESISTOR CH 1/10W 39K	1	
R925	ERJ6GEYJ123	M.RESISTOR CH 1/10W 12K	1	
R926	ERJ6GEYJ334	M.RESISTOR CH 1/10W 330K	1	
R927	ERJ6GEYJ103	M.RESISTOR CH 1/10W 10K	1	
R928	ERJ6GEYJ104	M.RESISTOR CH 1/10W 100K	1	
R929	ERJ6GEYJ562	M.RESISTOR CH 1/10W 5.6K	1	
R930-32	ERJ6GEYJ102	M.RESISTOR CH 1/10W 1K	3	
R933	ERJ6GEYJ392	M.RESISTOR CH 1/10W 3.9K	1	
R934	ERJ6GEYJ823	M.RESISTOR CH 1/10W 82K	1	
R935	ERJ6GEYJ273	M.RESISTOR CH 1/10W 27K	1	
R936	ERJ6GEYJ392	M.RESISTOR CH 1/10W 3.9K	1	
R937-39	ERJ6GEYJ102	M.RESISTOR CH 1/10W 1K	3	
R940	ERJ6GEYJ560	M.RESISTOR CH 1/10W 56	1	
R941	ERJ6GEYJ392	M.RESISTOR CH 1/10W 3.9K	1	
R942	ERJ6GEYJ102	M.RESISTOR CH 1/10W 1K	1	
R943	ERJ6GEYJ222	M.RESISTOR CH 1/10W 2.2K	1	
R944	ERJ6GEYJ823	M.RESISTOR CH 1/10W 82K	1	
R945	ERJ6GEYJ273	M.RESISTOR CH 1/10W 27K	1	
R946-48	ERJ6GEYJ102	M.RESISTOR CH 1/10W 1K	3	
R949	ERJ6GEYJ390	M.RESISTOR CH1/10W 39	1	
R950	ERJ6GEYJ392	M.RESISTOR CH 1/10W 3.9K	1	
R951	ERJ6GEYJ102	M.RESISTOR CH 1/10W 1K	1	
R952	ERJ6GEYJ222	M.RESISTOR CH 1/10W 2.2K	1	
R953	ERJ6GEYJ823	M.RESISTOR CH 1/10W 82K	1	
R954	ERJ6GEYJ273	M.RESISTOR CH 1/10W 27K	1	
R955,56	ERJ6GEYJ102	M.RESISTOR CH 1/10W 1K	2	
R957	ERJ6GEYJ222	M.RESISTOR CH 1/10W 2.2K	1	
R958	ERJ6GEYJ823	M.RESISTOR CH 1/10W 82K	1	
R959	ERJ6GEYJ273	M.RESISTOR CH 1/10W 27K	1	
R960	ERJ6GEYJ101	M.RESISTOR CH 1/10W 100	1	
R961	ERJ6GEYJ103	M.RESISTOR CH 1/10W 10K	1	
R962	ERJ6GEYJ102	M.RESISTOR CH 1/10W 1K	1	
R963	ERJ6GEYJ560	M.RESISTOR CH 1/10W 56	1	
R964	ERJ6GEY0R00	M.RESISTOR CH 1/10W 0	1	
R965	ERJ6GEYG223	M.RESISTOR CH 1/10W 22K	1	
SW101	VSS023703	SWITCH	1	
SW201	VSS023703	SWITCH	1	
SW301	VSS023703	SWITCH	1	
SW401	VSS023703	SWITCH	1	
T551,52	VLT0602	TRANSFORMER	2	
T553,54	VLT0603	TRANSFORMER	2	
T555	VLT0304	TRANSFORMER	1	
T556-58	VLT0603	TRANSFORMER	3	
TP1	VJR0646	TEST POINT	1	
TP101,02	VJR0646	TEST POINT	2	

Ref.No.	Part No.	Part Name & Description	Pcs	Remarks
TP104,05	VJR0646	TEST POINT	2	
TP201	VJR0646	TEST POINT	1	
TP301,02	VJR0646	TEST POINT	2	
TP304,05	VJR0646	TEST POINT	2	
TP401	VJR0646	TEST POINT	1	
TP501	VJR0646	TEST POINT	1	
TP551-58	VJR0646	TEST POINT	8	
TP601-09	VJR0646	TEST POINT	9	
TP702-04	VJR0646	TEST POINT	3	
TP802-04	VJR0646	TEST POINT	3	
TP901	VJR0646	TEST POINT	1	
TPG101	VJR0646	TEST POINT	1	
TPG301	VJR0646	TEST POINT	1	
TPG551	VJR0646	TEST POINT	1	
TPG901	VJR0646	TEST POINT	1	
VR101	VRV0109B103	V.RESISTOR 10K	1	
VR103	VRV0109B502	V.RESISTOR 5K	1	
VR201	VRV0109B203	V.RESISTOR 20K	1	
VR202	VRV0064B103	V.RESISTOR 10K	1	
VR203	VRV0109B502	V.RESISTOR 5K	1	
VR205	VRV0109B103	V.RESISTOR 10K	1	
VR206	VRV0109B502	V.RESISTOR 5K	1	
VR301	VRV0109B103	V.RESISTOR 10K	1	
VR303	VRV0109B502	V.RESISTOR 5K	1	
VR402	VRV0064B103	V.RESISTOR 10K	1	
VR403	VRV0109B502	V.RESISTOR 5K	1	
VR405	VRV0109B103	V.RESISTOR 10K	1	
VR406	VRV0109B502	V.RESISTOR 5K	1	
VR551,52	VRV0109B103	V.RESISTOR 10K	2	
VR701	VRV0109B203	V.RESISTOR 20K	1	
VR703	VRV0109B203	V.RESISTOR 20K	1	
VR704	VRV0109B303	V.RESISTOR 30K	1	
VR705	VRV0109B203	V.RESISTOR 20K	1	
VR801	VRV0109B203	V.RESISTOR 20K	1	
VR803-05	VRV0109B203	V.RESISTOR 20K	3	
VR901	VRV0109B502	V.RESISTOR 5K	1	
X551	VSX0246	CRYSTAL OSCILLATOR	1	
		MISCELLANEOUS		
	VML2143	CARD PULLER	1	
	VML2144	CARD PULLER	1	
	VMZ1547	BARRIER	1	
	VXA3966	P.C.B. SHIELD PLATE	1	
	XYNV3+K6FR	SCREW	5	

Ref.No.		Part No.	Part Name & Description	Pcs	Remarks
	■	VEP84095E	P.C.BOARD W/COMPONENT		FOR AU-63H,AU-62H
			W6 AUDIO		
			CAPACITORS		
C1,C2		ECEA1CU470	E.CAPACITOR 16V 47U	2	
C3		ECEA0JU101	E.CAPACITOR 6.3V 100U	1	
C5		ECEA1HNR33S	E.CAPACITOR 50V 0.33U	1	
C6		ECUM1E473KBN	C.CAPACITOR CH 25V 0.047U	1	
C8		ECEA1CN100S	E.CAPACITOR 16V 10U	1	
C9		ECEA1CU100	E.CAPACITOR 16V 10U	1	
C10		ECEA1CN100S	E.CAPACITOR 16V 10U	1	
C11		ECUM1H272KBN	C.CAPACITOR CH 50V 2700P	1	
C12		ECEA1CU100	E.CAPACITOR 16V 10U	1	
C13,14		ECEA1CU470	E.CAPACITOR 16V 47U	2	
C18		ECUM1H681JCN	C.CAPACITOR CH 50V 680P	1	
C106		ECUM1H470JCN	C.CAPACITOR CH 50V 47P	1	
C107		ECUM1E104ZFN	C.CAPACITOR CH 25V 0.1U	1	
C108		ECEA1CU101	E.CAPACITOR 16V 100U	1	
C109		ECEA1CN470S	E.CAPACITOR 16V 47U	1	
C110		ECEA1CU101	E.CAPACITOR 16V 100U	1	
C111		ECUM1E104ZFN	C.CAPACITOR CH 25V 0.1U	1	
C112,13		ECEA1CU101	E.CAPACITOR 16V 100U	2	
C114		ECEA1CN100S	E.CAPACITOR 16V 10U	1	
C115		ECUM1H220JCN	C.CAPACITOR CH 50V 22P	1	
C116		ECEA1CN100S	E.CAPACITOR 16V 10U	1	
C118		ECEA1CU470	E.CAPACITOR 16V 47U	1	
C120		ECUM1H470JCN	C.CAPACITOR CH 50V 47P	1	
C121		ECUM1H820JCN	C.CAPACITOR CH 50V 82P	1	
C122		ECUM1H151JCN	C.CAPACITOR CH 50V 150P	1	
C124		ECUM1H470JCN	C.CAPACITOR CH 50V 47P	1	
C125		ECEA0JU471	E.CAPACITOR 6.3V 470U	1	
C127,28		ECEA1CU470	E.CAPACITOR 16V 47U	2	
C129		ECQM1H473JF	P.CAPACITOR 50V 0.047U	1	
C131,32		ECEA1CU470	E.CAPACITOR 16V 47U	2	
C133		ECUM1H562KBN	C.CAPACITOR CH 50V 5600P	1	
C134,35		ECEA1CN100S	E.CAPACITOR 16V 10U	2	
C136		ECQP1H472FZ	P.CAPACITOR 50V 4700P	1	
C137		ECEA1CU100	E.CAPACITOR 16V 10U	1	
C138		ECQM1H473JF	P.CAPACITOR 50V 0.047U	1	
C139		ECEA1HUR22	E.CAPACITOR 50V 0.22U	1	
C140,41		ECEA1HUR68	E.CAPACITOR 50V 0.68U	2	
C142		ECEA1HUR22	E.CAPACITOR 50V 0.22U	1	
C143		ECQM1H473JF	P.CAPACITOR 50V 0.047U	1	
C144		ECEA1CU100	E.CAPACITOR 16V 10U	1	
C145		ECQP1H472FZ	P.CAPACITOR 50V 4700P	1	
C147		ECQP1H103FZ	P.CAPACITOR 50V 0.01U	1	
C148,49		ECQM1H394JF	P.CAPACITOR 50V 0.39U	2	
C306		ECUM1H470JCN	C.CAPACITOR CH 50V 47P	1	
C307		ECUM1E104ZFN	C.CAPACITOR CH 25V 0.1U	1	
C308		ECEA1CU101	E.CAPACITOR 16V 100U	1	
C309		ECEA1CN470S	E.CAPACITOR 16V 47U	1	
C310		ECEA1CU101	E.CAPACITOR 16V 100U	1	
C311		ECUM1E104ZFN	C.CAPACITOR CH 25V 0.1U	1	
C312,13		ECEA1CU101	E.CAPACITOR 16V 100U	2	
C314		ECEA1CN100S	E.CAPACITOR 16V 10U	1	
C315		ECUM1H220JCN	C.CAPACITOR CH 50V 22P	1	
C316		ECEA1CN100S	E.CAPACITOR 16V 10U	1	
C318		ECEA1CU470	E.CAPACITOR 16V 47U	1	
C320		ECUM1H470JCN	C.CAPACITOR CH 50V 47P	1	
C321		ECUM1H820JCN	C.CAPACITOR CH 50V 82P	1	
C322		ECUM1H151JCN	C.CAPACITOR CH 50V 150P	1	
C324		ECUM1H470JCN	C.CAPACITOR CH 50V 47P	1	
C325		ECEA0JU471	E.CAPACITOR 6.3V 470U	1	
C327,28		ECEA1CU470	E.CAPACITOR 16V 47U	2	
C329		ECQM1H473JF	P.CAPACITOR 50V 0.047U	1	
C331,32		ECEA1CU470	E.CAPACITOR 16V 47U	2	
C333		ECUM1H562KBN	C.CAPACITOR CH 50V 5600P	1	
C334,35		ECEA1CN100S	E.CAPACITOR 16V 10U	2	

Ref.No.		Part No.	Part Name & Description	Pcs	Remarks
C336		ECQP1H472FZ	P.CAPACITOR 50V 4700P	1	
C337		ECEA1CU100	E.CAPACITOR 16V 10U	1	
C338		ECQM1H473JF	P.CAPACITOR 50V 0.047U	1	
C339		ECEA1HUR22	E.CAPACITOR 50V 0.22U	1	
C340,41		ECEA1HUR68	E.CAPACITOR 50V 0.68U	2	
C342		ECEA1HUR22	E.CAPACITOR 50V 0.22U	1	
C343		ECQM1H473JF	P.CAPACITOR 50V 0.047U	1	
C344		ECEA1CU100	E.CAPACITOR 16V 10U	1	
C345		ECQP1H472FZ	P.CAPACITOR 50V 4700P	1	
C347		ECQP1H103FZ	P.CAPACITOR 50V 0.01U	1	
C348,49		ECQM1H394JF	P.CAPACITOR 50V 0.39U	2	
C501		ECEA1CU101	E.CAPACITOR 16V 100U	1	
C503		ECEA1CU220	E.CAPACITOR 16V 22U	1	
C553		ECEA1AU101	E.CAPACITOR 10V 100U	1	
C701		ECEA1CN470S	E.CAPACITOR 16V 47U	1	
C702		ECUM1H182KBN	C.CAPACITOR CH 50V 1800P	1	
C703		ECUM1H821JCN	C.CAPACITOR CH 50V 820P	1	
C712		ECEA1HU4R7	E.CAPACITOR 50V 4.7U	1	
C713		ECEA1HU3R3	E.CAPACITOR 50V 3.3U	1	
C714		ECQM1H682JF	P.CAPACITOR 50V 6800P	1	
C715		ECQM1H102JF	P.CAPACITOR 50V 1000P	1	
C716		ECQM1H223JF	P.CAPACITOR 50V 0.022U	1	
C717		ECEA1CU100	E.CAPACITOR 16V 10U	1	
C719		ECEA1HU4R7	E.CAPACITOR 50V 4.7U	1	
C720		ECEA1CU470	E.CAPACITOR 16V 47U	1	
C721		ECQM1H103JF	P.CAPACITOR 50V 0.01U	1	
C722		ECQB1H332JF	P.CAPACITOR 50V 3300P	1	
C723		ECUM1H272KBN	C.CAPACITOR CH 50V 2700P	1	
C724,25		ECUM1H102KBN	C.CAPACITOR CH 50V 1000P	2	
C726		ECEA1CN100S	E.CAPACITOR 16V 10U	1	
C727		ECEA1CU101	E.CAPACITOR 16V 100U	1	
C728		ECUM1E104ZFN	C.CAPACITOR CH 25V 0.1U	1	
C729,30		ECUM1H103KBN	C.CAPACITOR CH 50V 0.01U	2	
C732		ECQM1H223JF	P.CAPACITOR 50V 0.022U	1	
C733		ECUM1H122KBN	C.CAPACITOR CH 50V 1200P	1	
C801		ECEA1CN470S	E.CAPACITOR 16V 47U	1	
C802		ECUM1H182KBN	C.CAPACITOR CH 50V 1800P	1	
C803		ECUM1H821JCN	C.CAPACITOR CH 50V 820P	1	
C804,05		ECUM1H222KBN	C.CAPACITOR CH 50V 2200P	2	
C812		ECEA1HU4R7	E.CAPACITOR 50V 4.7U	1	
C813		ECEA1HU3R3	E.CAPACITOR 50V 3.3U	1	
C814		ECQM1H682JF	P.CAPACITOR 50V 6800P	1	
C815		ECQM1H102JF	P.CAPACITOR 50V 1000P	1	
C816		ECQM1H223JF	P.CAPACITOR 50V 0.022U	1	
C817		ECEA1CU100	E.CAPACITOR 16V 10U	1	
C819		ECEA1HU4R7	E.CAPACITOR 50V 4.7U	1	
C820		ECEA1CU470	E.CAPACITOR 16V 47U	1	
C821		ECQM1H103JF	P.CAPACITOR 50V 0.01U	1	
C822		ECQB1H332JF	P.CAPACITOR 50V 3300P	1	
C823		ECUM1H272KBN	C.CAPACITOR CH 50V 2700P	1	
C824,25		ECUM1H102KBN	C.CAPACITOR CH 50V 1000P	2	
C826		ECEA1CN100S	E.CAPACITOR 16V 10U	1	
C827		ECEA1CU101	E.CAPACITOR 16V 100U	1	
C828		ECUM1E104ZFN	C.CAPACITOR CH 25V 0.1U	1	
C829,30		ECUM1H103KBN	C.CAPACITOR CH 50V 0.01U	2	
C832		ECQM1H223JF	P.CAPACITOR 50V 0.022U	1	
C833		ECUM1H122KBN	C.CAPACITOR CH 50V 1200P	1	
C903		ECUM1E104ZFN	C.CAPACITOR CH 25V 0.1U	1	
C904		ECEA1CU101	E.CAPACITOR 16V 100U	1	
C905		ECUM1E104ZFN	C.CAPACITOR CH 25V 0.1U	1	
C906,07		ECEA1CU101	E.CAPACITOR 16V 100U	2	
C917		ECEA1CU100	E.CAPACITOR 16V 10U	1	
C918		ECUM1E104ZFN	C.CAPACITOR CH 25V 0.1U	1	
C920		ECUM1H151JCN	C.CAPACITOR CH 50V 150P	1	
C921,22		ECUM1H103KBN	C.CAPACITOR CH 50V 0.01U	2	
C923		ECUM1H331JCN	C.CAPACITOR CH 50V 330P	1	
C924		ECEA1HU010	E.CAPACITOR 50V 1U	1	
C925		ECQM1H223JF	P.CAPACITOR 50V 0.022U	1	
C926		ECUM1H103KBN	C.CAPACITOR CH 50V 0.01U	1	
C929		ECUM1H151JCN	C.CAPACITOR CH 50V 150P	1	
C930,31		ECUM1H103KBN	C.CAPACITOR CH 50V 0.01U	2	
C932		ECUM1H271JCN	C.CAPACITOR CH 50V 270P	1	
C933		ECUM1H391JCN	C.CAPACITOR CH 50V 390P	1	
C934,35		ECUM1H103KBN	C.CAPACITOR CH 50V 0.01U	2	
C936		ECEA1CU100	E.CAPACITOR 16V 10U	1	

Ref.No.	Part No.	Part Name & Description	Pcs	Remarks
C937	ECUM1E104ZFN	C.CAPACITOR CH 25V 0.1U	1	
C938-40	ECEA1CU101	E.CAPACITOR 16V 100U	3	
C941	ECEA1HU3R3	E.CAPACITOR 50V 3.3U	1	
C942	ECEA1CU470	E.CAPACITOR 16V 47U	1	
C944	ECUM1H103KBN	C.CAPACITOR CH 50V 0.01U	1	
C945,46	ECEA1CU101	E.CAPACITOR 16V 100U	2	
C947,48	ECEA1HU010	E.CAPACITOR 50V 1U	2	
C949	ECUM1E104ZFN	C.CAPACITOR CH 25V 0.1U	1	
C950	ECEA1CU101	E.CAPACITOR 16V 100U	1	
D1	MA153	DIODE	1	
D2	MA151K	DIODE	1	
D3,D4	MA3024	DIODE	2	
D7	MA151WK	DIODE	1	
D501	MA153	DIODE	1	
D502	MA151WA	DIODE	1	
D903	MA151K	DIODE	1	
FL101	EIR7QH007Q	FILTER	1	
FL102	VLF0829	FILTER	1	
FL103	ELM7Q306A	COIL	1	
FL301	EIR7QH007Q	FILTER	1	
FL302	VLF0829	FILTER	1	
FL303	ELM7Q306A	COIL	1	
FL901	ELB4L053	FILTER	1	
FL902	ELB4M043	FILTER	1	
IC2,C3	UPD4053BG	IC	2	
IC4	NJM4558M	IC	1	
IC5,C6	RC082BM	IC	2	
IC101	AN6558S	IC	1	
IC104	NJM4558M	IC	1	
IC105	TEA0666T	IC	1	
IC106	AN78N09	IC	1	
IC107	AN79N09	IC	1	
IC108	NJM4558M	IC	1	
IC301	AN6558S	IC	1	
IC304	NJM4558M	IC	1	
IC305	TEA0666T	IC	1	
IC306	AN78N09	IC	1	
IC307	AN79N09	IC	1	
IC308	NJM4558M	IC	1	
IC701	NJM4558M	IC	1	
IC703	NJM4558M	IC	1	
IC801	NJM4558M	IC	1	
IC803	NJM4558M	IC	1	
IC805	BA7700K1	IC	1	
IC901	AN78L12	IC	1	
IC902	AN78L05	IC	1	
IC903	AN79L09	IC	1	
IC904	AN78L09	IC	1	
L101,02	VLQEL05S101K	COIL 100UH	2	
L301,02	VLQEL05S101K	COIL 100UH	2	
L552	VLQEL05S471K	COIL 470UH	1	
L906,07	VLQEL05S101K	COIL 100UH	2	
L909	VLQEL05S271J	COIL 270UH	1	
L910-13	VLQEL05S101K	COIL 100UH	4	
P101	VJP1232R	CONNECTOR(MALE) 5P	1	
P301	VJP1232G	CONNECTOR(MALE)	1	
P553	VJP1230T	CONNECTOR(MALE) 3P	1	

Ref.No.	Part No.	Part Name & Description	Pcs	Remarks
Q1	2SD602	TRANSISTOR	1	(Q,R)
Q11	UN2211	TRANSISTOR-RESISTOR	1	
Q12	2SB710	TRANSISTOR	1	
Q13	UN2113	TRANSISTOR-RESISTOR	1	
Q14	2SD1328-R	TRANSISTOR CHIP	1	(Q,R)
Q15	UN2213	TRANSISTOR-RESISTOR	1	
Q107	2SD1328-R	TRANSISTOR CHIP	1	(Q,R)
Q108	UN2113	TRANSISTOR-RESISTOR	1	
Q114	2SK146	TRANSISTOR	1	(B,L)
Q115	2SD601-R	TRANSISTOR CHIP	1	(Q,R)
Q116	2SB709-R	TRANSISTOR CHIP	1	(Q,R)
Q117	2SD601-R	TRANSISTOR CHIP	1	(Q,R)
Q118-20	UN2213	TRANSISTOR-RESISTOR	3	
Q307	2SD1328-R	TRANSISTOR CHIP	1	(Q,R)
Q308	UN2113	TRANSISTOR-RESISTOR	1	
Q314	2SK146	TRANSISTOR	1	(B,L)
Q315	2SD601-R	TRANSISTOR CHIP	1	(Q,R)
Q316	2SB709-R	TRANSISTOR CHIP	1	(Q,R)
Q317	2SD601-R	TRANSISTOR CHIP	1	(Q,R)
Q318-20	UN2213	TRANSISTOR-RESISTOR	3	
Q501	2SB709-R	TRANSISTOR CHIP	1	(Q,R)
Q502	UN2113	TRANSISTOR-RESISTOR	1	
Q503	UN2213	TRANSISTOR-RESISTOR	1	
Q504	2SD602	TRANSISTOR	1	(Q,R)
Q701	2SD1328-R	TRANSISTOR CHIP	1	(Q,R)
Q702	2SD601-R	TRANSISTOR CHIP	1	(Q,R)
Q801	2SD1328-R	TRANSISTOR CHIP	1	(Q,R)
Q802	2SD601-R	TRANSISTOR CHIP	1	(Q,R)
Q911	2SD601-R	TRANSISTOR CHIP	1	(Q,R)
Q912	2SC2404-B	TRANSISTOR CHIP	1	(B,C)
Q913,14	2SD601-R	TRANSISTOR CHIP	2	(Q,R)
Q915	2SC2404-B	TRANSISTOR CHIP	1	(B,C)
Q916,17	2SD601-R	TRANSISTOR CHIP	2	(Q,R)
Q919	UN2213	TRANSISTOR-RESISTOR	1	
Q920	UN2113	TRANSISTOR-RESISTOR	1	
		RESISTORS		
R1	ERJ6GEYJ102	M.RESISTOR CH 1/10W 1K	1	
R2	ERJ6GEYG223	M.RESISTOR CH 1/10W 22K	1	
R12	ERJ6GEYJ100	M.RESISTOR CH 1/10W 10	1	
R13	ERJ6GEYJ473	M.RESISTOR CH 1/10W 47K	1	
R14	ERJ6GEYJ102	M.RESISTOR CH 1/10W 1K	1	
R15	ERJ6GEY0R00	M.RESISTOR CH 1/10W 0	1	
R16	ERJ6GEYJ224	M.RESISTOR CH 1/10W 220K	1	
R17	ERJ6GEYJ562	M.RESISTOR CH 1/10W 5.6K	1	
R18	ERJ6GEYJ473	M.RESISTOR CH 1/10W 47K	1	
R19	ERJ6GEYJ331	M.RESISTOR CH 1/10W 330	1	
R20	ERJ6GEYJ473	M.RESISTOR CH 1/10W 47K	1	
R21	ERJ6GEYJ123	M.RESISTOR CH 1/10W 12K	1	
R22	ERJ6GEYJ104	M.RESISTOR CH 1/10W 100K	1	
R23	ERJ6GEYJ102	M.RESISTOR CH 1/10W 1K	1	
R24	ERJ6GEYJ470	M.RESISTOR CH 1/10W 47	1	
R25	ERJ6GEYJ332	M.RESISTOR CH 1/10W 3.3K	1	
R26	ERJ6GEYJ473	M.RESISTOR CH 1/10W 47K	1	
R27	ERJ6GEYJ472	M.RESISTOR CH 1/10W 4.7K	1	
R29	ERJ6GEYJ470	M.RESISTOR CH 1/10W 47	1	
R30	ERJ6GEYJ102	M.RESISTOR CH 1/10W 1K	1	
R39	ERJ6GEYJ104	M.RESISTOR CH 1/10W 100K	1	
R42	ERJ6GEYG223	M.RESISTOR CH 1/10W 22K	1	
R44	ERJ6GEYJ104	M.RESISTOR CH 1/10W 100K	1	
R48	ERJ6GEYJ104	M.RESISTOR CH 1/10W 100K	1	
R50	ERJ6GEYG223	M.RESISTOR CH 1/10W 22K	1	
R51	ERJ6GEYJ103	M.RESISTOR CH 1/10W 10K	1	
R53	ERJ6GEY0R00	M.RESISTOR CH 1/10W 0	1	
R55	ERJ6GEYJ682	M.RESISTOR CH 1/10W 6.8K	1	
R120	ERJ6GEYJ104	M.RESISTOR CH 1/10W 100K	1	
R121	ERJ6GEYJ102	M.RESISTOR CH 1/10W 1K	1	
R122	ERJ6GEYJ103	M.RESISTOR CH 1/10W 10K	1	
R123	ERJ6GEYJ102	M.RESISTOR CH 1/10W 1K	1	
R124	ERJ6GEYG112	M.RESISTOR CH 1/10W 1.1K	1	
R125	ERJ6GEY0R00	M.RESISTOR CH 1/10W 0	1	
R126	ERJ6GEYJ104	M.RESISTOR CH 1/10W 100K	1	
R127	ERJ6GEYJ102	M.RESISTOR CH 1/10W 1K	1	

Ref.No.	Part No.	Part Name & Description	Pcs	Remarks
R128	ERJ6GEYJ123	M.RESISTOR CH 1/10W 12K	1	
R129	ERJ6GEYJ104	M.RESISTOR CH 1/10W 100K	1	
R131	ERJ6GEYJ100	M.RESISTOR CH 1/10W 10	1	
R138,39	VRE0034E272	M.RESISTOR CH 1/10W 2.7K	2	
R140	ERJ6GEYJ103	M.RESISTOR CH 1/10W 10K	1	
R141	VRE0034E473	M.RESISTOR CH 1/10W 47K	1	
R142	VRE0034E272	M.RESISTOR CH 1/10W 2.7K	1	
R143	VRE0034E470	M.RESISTOR CH 1/10W 47	1	
R144	VRE0034E104	M.RESISTOR CH 1/10W 100K	1	
R145	ERJ6GEYJ102	M.RESISTOR CH 1/10W 1K	1	
R147	ERJ6GEYJ103	M.RESISTOR CH 1/10W 10K	1	
R148,49	ERJ6GEYJ102	M.RESISTOR CH 1/10W 1K	2	
R150	ERJ6GEYG223	M.RESISTOR CH 1/10W 22K	1	
R151	ERJ6GEYJ102	M.RESISTOR CH 1/10W 1K	1	
R152	ERJ6GEYJ103	M.RESISTOR CH 1/10W 10K	1	
R153	ERJ6GEYJ221	M.RESISTOR CH 1/10W 220	1	
R154	ERJ6GEYJ101	M.RESISTOR CH 1/10W 100	1	
R155	ERJ6GEYJ272	M.RESISTOR CH 1/10W 2.7K	1	
R156	ERJ6GEYJ332	M.RESISTOR CH 1/10W 3.3K	1	
R157	VRE0034E102	M.RESISTOR CH 1/10W 1K	1	
R158	VRE0034E332	M.RESISTOR CH 1/10W 3.3K	1	
R159	ERJ6GEYJ221	M.RESISTOR CH 1/10W 220	1	
R160	VRE0034E823	M.RESISTOR CH 1/10W 82K	1	
R161	VRE0034E333	M.RESISTOR CH 1/10W 33K	1	
R162	VRE0034E823	M.RESISTOR CH 1/10W 82K	1	
R164	VRE0034E683	M.RESISTOR CH 1/10W 68K	1	
R165	VRE0034E222	M.RESISTOR CH 1/10W 2.2K	1	
R166	VRE0034E512	M.RESISTOR CH 1/10W 5.1K	1	
R167	VRE0034E822	M.RESISTOR CH 1/10W 8.2K	1	
R168	VRE0034E203	M.RESISTOR CH 1/10W 20K	1	
R169	VRE0034E911	M.RESISTOR CH 1/10W 910	1	
R320	ERJ6GEYJ104	M.RESISTOR CH 1/10W 100K	1	
R321	ERJ6GEYJ102	M.RESISTOR CH 1/10W 1K	1	
R322	ERJ6GEYJ103	M.RESISTOR CH 1/10W 10K	1	
R323	ERJ6GEYJ102	M.RESISTOR CH 1/10W 1K	1	
R324	ERJ6GEYG112	M.RESISTOR CH 1/10W 1.1K	1	
R325	ERJ6GEY0R00	M.RESISTOR CH 1/10W 0	1	
R326	ERJ6GEYJ104	M.RESISTOR CH 1/10W 100K	1	
R327	ERJ6GEYJ102	M.RESISTOR CH 1/10W 1K	1	
R328	ERJ6GEYJ123	M.RESISTOR CH 1/10W 12K	1	
R329	ERJ6GEYJ104	M.RESISTOR CH 1/10W 100K	1	
R331	ERJ6GEYJ100	M.RESISTOR CH 1/10W 10	1	
R338,39	VRE0034E272	M.RESISTOR CH 1/10W 2.7K	2	
R340	ERJ6GEYJ103	M.RESISTOR CH 1/10W 10K	1	
R341	VRE0034E473	M.RESISTOR CH 1/10W 47K	1	
R342	VRE0034E272	M.RESISTOR CH 1/10W 2.7K	1	
R343	VRE0034E470	M.RESISTOR CH 1/10W 47	1	
R344	VRE0034E104	M.RESISTOR CH 1/10W 100K	1	
R345	ERJ6GEYJ102	M.RESISTOR CH 1/10W 1K	1	
R347	ERJ6GEYJ103	M.RESISTOR CH 1/10W 10K	1	
R348,49	ERJ6GEYJ102	M.RESISTOR CH 1/10W 1K	2	
R350	ERJ6GEYG223	M.RESISTOR CH 1/10W 22K	1	
R351	ERJ6GEYJ102	M.RESISTOR CH 1/10W 1K	1	
R352	ERJ6GEYJ103	M.RESISTOR CH 1/10W 10K	1	
R353	ERJ6GEYJ221	M.RESISTOR CH 1/10W 220	1	
R354	ERJ6GEYJ101	M.RESISTOR CH 1/10W 100	1	
R355	ERJ6GEYJ272	M.RESISTOR CH 1/10W 2.7K	1	
R356	ERJ6GEYJ332	M.RESISTOR CH 1/10W 3.3K	1	
R357	VRE0034E102	M.RESISTOR CH 1/10W 1K	1	
R358	VRE0034E332	M.RESISTOR CH 1/10W 3.3K	1	
R359	ERJ6GEYJ221	M.RESISTOR CH 1/10W 220	1	
R360	VRE0034E823	M.RESISTOR CH 1/10W 82K	1	
R361	VRE0034E333	M.RESISTOR CH 1/10W 33K	1	
R362	VRE0034E823	M.RESISTOR CH 1/10W 82K	1	
R364	VRE0034E683	M.RESISTOR CH 1/10W 68K	1	
R365	VRE0034E222	M.RESISTOR CH 1/10W 2.2K	1	
R366	VRE0034E512	M.RESISTOR CH 1/10W 5.1K	1	
R367	VRE0034E822	M.RESISTOR CH 1/10W 8.2K	1	
R368	VRE0034E203	M.RESISTOR CH 1/10W 20K	1	
R369	VRE0034E911	M.RESISTOR CH 1/10W 910	1	
R501	ERJ6GEYJ103	M.RESISTOR CH 1/10W 10K	1	
R502,03	ERJ6GEYG223	M.RESISTOR CH 1/10W 22K	2	
R508	ERJ6GEYJ103	M.RESISTOR CH 1/10W 10K	1	
R509	ERJ6GEYG223	M.RESISTOR CH 1/10W 22K	1	
R510	ERJ6GEYJ273	M.RESISTOR CH 1/10W 27K	1	

Ref.No.	Part No.	Part Name & Description	Pcs	Remarks
R511	ERJ6GEYJ103	M.RESISTOR CH 1/10W 10K	1	
R701	ERJ6GEYJ104	M.RESISTOR CH 1/10W 100K	1	
R702,03	ERJ6GEYJ332	M.RESISTOR CH 1/10W 3.3K	2	
R704	ERJ6GEYJ102	M.RESISTOR CH 1/10W 1K	1	
R705	ERJ6GEYJ272	M.RESISTOR CH 1/10W 2.7K	1	
R706	ERJ6GEYJ102	M.RESISTOR CH 1/10W 1K	1	
R707	ERJ6GEYJ104	M.RESISTOR CH 1/10W 100K	1	
R709	ERJ6GEYJ472	M.RESISTOR CH 1/10W 4.7K	1	
R710	ERJ6GEYJ682	M.RESISTOR CH 1/10W 6.8K	1	
R728,29	ERJ6GEYJ821	M.RESISTOR CH 1/10W 820	2	
R730	ERJ6GEYJ681	M.RESISTOR CH 1/10W 680	1	
R731	ERJ6GEY0R00	M.RESISTOR CH 1/10W 0	1	
R732	ERJ6GEYG112	M.RESISTOR CH 1/10W 1.1K	1	
R733	ERJ6GEYJ103	M.RESISTOR CH 1/10W 10K	1	
R734	ERJ6GEYJ183	M.RESISTOR CH 1/10W 18K	1	
R735	ERJ6GEYJ562	M.RESISTOR CH 1/10W 5.6K	1	
R736	ERJ6GEYJ104	M.RESISTOR CH 1/10W 100K	1	
R737,38	ERJ6GEYJ122	M.RESISTOR CH 1/10W 1.2K	2	
R739	VRE0034E362	M.RESISTOR CH 1/10W 3.6K	1	
R740	ERJ6GEYJ122	M.RESISTOR CH 1/10W 1.2K	1	
R741,42	ERJ6GEYJ103	M.RESISTOR CH 1/10W 10K	2	
R743-45	ERJ6GEYJ473	M.RESISTOR CH 1/10W 47K	3	
R801	ERJ6GEYJ104	M.RESISTOR CH 1/10W 100K	1	
R802,03	ERJ6GEYJ332	M.RESISTOR CH 1/10W 3.3K	2	
R804	ERJ6GEYJ102	M.RESISTOR CH 1/10W 1K	1	
R805	ERJ6GEYJ272	M.RESISTOR CH 1/10W 2.7K	1	
R806	ERJ6GEYJ102	M.RESISTOR CH 1/10W 1K	1	
R807	ERJ6GEYJ104	M.RESISTOR CH 1/10W 100K	1	
R809	ERJ6GEYJ472	M.RESISTOR CH 1/10W 4.7K	1	
R810	ERJ6GEYJ682	M.RESISTOR CH 1/10W 6.8K	1	
R828,29	ERJ6GEYJ821	M.RESISTOR CH 1/10W 820	2	
R830	ERJ6GEYJ681	M.RESISTOR CH 1/10W 680	1	
R831	ERJ6GEY0R00	M.RESISTOR CH 1/10W 0	1	
R832	ERJ6GEYG112	M.RESISTOR CH 1/10W 1.1K	1	
R833	ERJ6GEYJ103	M.RESISTOR CH 1/10W 10K	1	
R834	ERJ6GEYJ183	M.RESISTOR CH 1/10W 18K	1	
R835	ERJ6GEYJ562	M.RESISTOR CH 1/10W 5.6K	1	
R836	ERJ6GEYJ104	M.RESISTOR CH 1/10W 100K	1	
R837,38	ERJ6GEYJ122	M.RESISTOR CH 1/10W 1.2K	2	
R839	VRE0034E362	M.RESISTOR CH 1/10W 3.6K	1	
R840	ERJ6GEYJ122	M.RESISTOR CH 1/10W 1.2K	1	
R841,42	ERJ6GEYJ103	M.RESISTOR CH 1/10W 10K	2	
R843,44	ERJ6GEYJ473	M.RESISTOR CH 1/10W 47K	2	
R845	ERJ6GEYJ273	M.RESISTOR CH 1/10W 27K	1	
R914	ERJ6GEYJ104	M.RESISTOR CH 1/10W 100K	1	
R917,18	ERJ6GEYJ561	M.RESISTOR CH 1/10W 560	2	
R919,20	ERJ6GEYJ222	M.RESISTOR CH 1/10W 2.2K	2	
R921	VRE0034E223	M.RESISTOR CH 1/10W 22K	1	
R922,23	ERJ6GEYJ104	M.RESISTOR CH 1/10W 100K	2	
R924	ERJ6GEYJ393	M.RESISTOR CH 1/10W 39K	1	
R925	ERJ6GEYJ123	M.RESISTOR CH 1/10W 12K	1	
R926	ERJ6GEYJ334	M.RESISTOR CH 1/10W 330K	1	
R927	ERJ6GEYJ103	M.RESISTOR CH 1/10W 10K	1	
R928	ERJ6GEYJ104	M.RESISTOR CH 1/10W 100K	1	
R939	ERJ6GEYJ102	M.RESISTOR CH 1/10W 1K	1	
R940	ERJ6GEYJ560	M.RESISTOR CH 1/10W 56	1	
R941	ERJ6GEYJ392	M.RESISTOR CH 1/10W 3.9K	1	
R942	ERJ6GEYJ102	M.RESISTOR CH 1/10W 1K	1	
R943	ERJ6GEYJ222	M.RESISTOR CH 1/10W 2.2K	1	
R944	ERJ6GEYJ823	M.RESISTOR CH 1/10W 82K	1	
R945	ERJ6GEYJ273	M.RESISTOR CH 1/10W 27K	1	
R946-48	ERJ6GEYJ102	M.RESISTOR CH 1/10W 1K	3	
R949	ERJ6GEYJ390	M.RESISTOR CH 1/10W 39	1	
R950	ERJ6GEYJ392	M.RESISTOR CH 1/10W 3.9K	1	
R951	ERJ6GEYJ102	M.RESISTOR CH 1/10W 1K	1	
R952	ERJ6GEYJ222	M.RESISTOR CH 1/10W 2.2K	1	
R953	ERJ6GEYJ823	M.RESISTOR CH 1/10W 82K	1	
R954	ERJ6GEYJ273	M.RESISTOR CH 1/10W 27K	1	
R955,56	ERJ6GEYJ102	M.RESISTOR CH 1/10W 1K	2	
R957	ERJ6GEYJ222	M.RESISTOR CH 1/10W 2.2K	1	
R958	ERJ6GEYJ823	M.RESISTOR CH 1/10W 82K	1	
R959	ERJ6GEYJ273	M.RESISTOR CH 1/10W 27K	1	
R960	ERJ6GEYJ101	M.RESISTOR CH 1/10W 100	1	
R961	ERJ6GEYJ103	M.RESISTOR CH 1/10W 10K	1	
R963	ERJ6GEYJ560	M.RESISTOR CH 1/10W 56	1	

Ref.No.		Part No.	Part Name & Description	Pcs	Remarks
SW101		VSS023703	SWITCH	1	
SW301		VSS023703	SWITCH	1	
TP1		VJR0646	TEST POINT	1	
TP101		VJR0646	TEST POINT	1	
TP301		VJR0646	TEST POINT	1	
TP501		VJR0646	TEST POINT	1	
TP702-04		VJR0646	TEST POINT	3	
TP802-04		VJR0646	TEST POINT	3	
TP901-03		VJR0646	TEST POINT	3	
TPG101		VJR0646	TEST POINT	1	
TPG301		VJR0646	TEST POINT	1	
TPG901		VJR0646	TEST POINT	1	
VR103		VRV0109B502	V.RESISTOR 5K	1	
VR303		VRV0109B502	V.RESISTOR 5K	1	
VR703		VRV0109B203	V.RESISTOR 20K	1	
VR704		VRV0109B303	V.RESISTOR 30K	1	
VR705		VRV0109B203	V.RESISTOR 20K	1	
VR803-05		VRV0109B203	V.RESISTOR 20K	3	
			MISCELLANEOUS		
		VML2143	CARD PULLER	1	
		VML2144	CARD PULLER	1	
		VMZ1547	BARRIER	1	
		VXA3966	P.C.B. SHIELD PLATE	1	
		XYNV3+K6FR	SCREW	5	

Ref.No.		Part No.	Part Name & Description	Pcs	Remarks
	■	VEP80549H	P.C.BOARD W/COMPONENT		FOR AU-65H
			BO MOTHER 2		
B1L		VJS2899A096	CONNECTOR (FEMALE)	1	
B2L		VJS2899A096	CONNECTOR (FEMALE)	1	
B1R		VJS2899A096	CONNECTOR (FEMALE)	1	
			CAPACITORS		
C1		ECEA0JU221	E.CAPACITOR 6.3V 220U	1	
C2		ECQB1H473JF	P.CAPACITOR 50V 0.047U	1	
CN50		VJP2893A064	CONNECTOR(MALE)	1	
CN51		VJP1247T	CONNECTOR(MALE) 7P	1	
CN52		VJP1233T	CONNECTOR(MALE) 6P	1	
CN53		VJP2856A026	CONNECTOR(MALE)	1	
CN54		VJP3093	CONNECTOR	1	
CN55		VJP3082	CONNECTOR (MALE)	1	
CN56		VJP3094	CONNECTOR (MALE)	1	
CN57		VJP3081	CONNECTOR	1	
CN58		VJP1248T	CONNECTOR(MALE) 8P	1	
CN59		VJP3095	CONNECTOR (MALE)	1	
CN61		VJP1244T	CONNECTOR(MALE) 4P	1	
CN311		VJP1243T	CONNECTOR(MALE) 3P	1	
CN610		VJP1243T	CONNECTOR(MALE) 3P	1	
P10		VJP1709	CONNECTOR(MALE)	1	
			MISCELLANEOUS		
		VMP2599	P.C.B. HOLDER ANGLE	1	
		XNG26E	NUT	6	
		XTV3+6F	SCREW	5	
		XYN26+C8	SCREW	6	
	■	VEP80549K	P.C.BOARD W/COMPONENT		FOR AU-63H
			BO MOTHER 2		
B1L		VJS2899A096	CONNECTOR (FEMALE)	1	
B2L		VJS2899A096	CONNECTOR (FEMALE)	1	
B1R		VJS2899A096	CONNECTOR (FEMALE)	1	
			CAPACITORS		
C1		ECEA0JU221	E.CAPACITOR 6.3V 220U	1	
C2		ECQB1H473JF	P.CAPACITOR 50V 0.047U	1	
CN50		VJP2893A064	CONNECTOR(MALE)	1	

Ref.No.		Part No.	Part Name & Description	Pcs	Remarks
CN51		VJP1247T	CONNECTOR(MALE) 7P	1	
CN52		VJP1233T	CONNECTOR(MALE) 6P	1	
CN53		VJP2856A026	CONNECTOR(MALE)	1	
CN54		VJP3093	CONNECTOR	1	
CN55		VJP3082	CONNECTOR (MALE)	1	
CN56		VJP3094	CONNECTOR (MALE)	1	
CN57		VJP3081	CONNECTOR	1	
CN58		VJP1248T	CONNECTOR(MALE) 8P	1	
CN59		VJP3095	CONNECTOR (MALE)	1	
CN61		VJP1244T	CONNECTOR(MALE) 4P	1	
CN311		VJP1243T	CONNECTOR(MALE) 3P	1	
CN610		VJP1243T	CONNECTOR(MALE) 3P	1	
P10		VJP1709	CONNECTOR(MALE)	1	
			MISCELLANEOUS		
		VMP2599	P.C.B. HOLDER ANGLE	1	
		XNG26E	NUT	6	
		XTV3+6F	SCREW	5	
		XYN26+C8	SCREW	6	
	■	VEP80549J	P.C.BOARD W/COMPONENT		FOR AU-62H
			BO MOTHER 2		
B1L		VJS2899A096	CONNECTOR (FEMALE)	1	
B2L		VJS2899A096	CONNECTOR (FEMALE)	1	
B1R		VJS2899A096	CONNECTOR (FEMALE)	1	
			CAPACITORS		
C1		ECEA0JU221	E.CAPACITOR 6.3V 220U	1	
C2		ECQB1H473JF	P.CAPACITOR 50V 0.047U	1	
CN50		VJP2893A064	CONNECTOR(MALE)	1	
CN51		VJP1247T	CONNECTOR(MALE) 7P	1	
CN52		VJP1233T	CONNECTOR(MALE) 6P	1	
CN53		VJP2856A026	CONNECTOR(MALE)	1	
CN54		VJP3093	CONNECTOR	1	
CN55		VJP3082	CONNECTOR (MALE)	1	
CN56		VJP3094	CONNECTOR (MALE)	1	
CN57		VJP3081	CONNECTOR	1	
CN58		VJP1248T	CONNECTOR(MALE) 8P	1	
CN59		VJP3095	CONNECTOR (MALE)	1	
CN61		VJP1244T	CONNECTOR(MALE) 4P	1	
CN311		VJP1243T	CONNECTOR(MALE) 3P	1	
CN610		VJP1243T	CONNECTOR(MALE) 3P	1	
P10		VJP1709	CONNECTOR(MALE)	1	
			MISCELLANEOUS		
		VMP2599	P.C.B.HOLDER ANGLE	1	
		XNG26E	NUT	6	
		XTV3+6F	SCREW	5	
		XYN26+C8	SCREW	6	
	■	VEP86121D	P.C.BOARD W/COMPONENT		FOR AU-65H
			B1 SYSTEM CONTROL		

Ref.No.		Part No.	Part Name & Description	Pcs	Remarks
B1L		VJP2899B096	CONNECTOR(MALE)	1	
B1R		VJP2899B096	CONNECTOR(MALE)	1	
			CAPACITORS		
C1,C2		ECUM1H331JCN	C.CAPACITOR CH 50V 330P	2	
C3-C5		ECUM1H102JCN	C.CAPACITOR CH 50V 1000P	3	
C6-C9		ECUM1H103ZFN	C.CAPACITOR CH 50V 0.01U	4	
C10		ECEA0JU221	E.CAPACITOR 6.3V 220U	1	
C11		ECEA0JU101	E.CAPACITOR 6.3V 100U	1	
C12,13		ECUM1E104ZFN	C.CAPACITOR CH 25V 0.1U	2	
C14,15		ECUM1H270JCN	C.CAPACITOR CH 50V 27P	2	
C16-18		ECUM1H103ZFN	C.CAPACITOR CH 50V 0.01U	3	
C19		ECEA1HU3R3	E.CAPACITOR 50V 3.3U	1	
C20		ECQM1H104JF	P.CAPACITOR 50V 0.1U	1	
C21-23		ECUM1H103ZFN	C.CAPACITOR CH 50V 0.01U	3	
C25		ECEA0JU471	E.CAPACITOR 6.3V 470U	1	
C26,27		ECUM1H680JCN	C.CAPACITOR CH 50V 68P	2	
C28-33		ECUM1H103ZFN	C.CAPACITOR CH 50V 0.01U	6	
C34		ECUM1E104ZFN	C.CAPACITOR CH 25V 0.1U	1	
C35,36		ECUM1H103ZFN	C.CAPACITOR CH 50V 0.01U	2	
C37		ECEA1CU100	E.CAPACITOR 16V 10U	1	
C38-41		ECUM1E104ZFN	C.CAPACITOR CH 25V 0.1U	4	
C42-47		ECUM1H103ZFN	C.CAPACITOR CH 50V 0.01U	6	
C50		ECUM1H103ZFN	C.CAPACITOR CH 50V 0.01U	1	
C51		ECEA1CU100	E.CAPACITOR 16V 10U	1	
C52		ECUM1E104ZFN	C.CAPACITOR CH 25V 0.1U	1	
C53		ECUM1H103ZFN	C.CAPACITOR CH 50V 0.01U	1	
C75-82		ECUM1H103ZFN	C.CAPACITOR CH 50V 0.01U	8	
C83,84		ECEA1HU010	E.CAPACITOR 50V 1U	2	
C85		ECEA1CN100S	E.CAPACITOR 16V 10U	1	
C86		ECUM1H101JCN	C.CAPACITOR CH 50V 100P	1	
C87		ECUM1H103ZFN	C.CAPACITOR CH 50V 0.01U	1	
C88		ECEA1CN100S	E.CAPACITOR 16V 10U	1	
C89		ECUM1H101JCN	C.CAPACITOR CH 50V 100P	1	
C90		ECUM1H103ZFN	C.CAPACITOR CH 50V 0.01U	1	
C91		ECEA1HU010	E.CAPACITOR 50V 1U	1	
C92		ECUM1H103ZFN	C.CAPACITOR CH 50V 0.01U	1	
C94		ECEA1HU010	E.CAPACITOR 50V 1U	1	
C95		ECUM1H103ZFN	C.CAPACITOR CH 50V 0.01U	1	
C96-99		ECUM1E104ZFN	C.CAPACITOR CH 25V 0.1U	4	
C100,01		ECUM1E104ZFN	C.CAPACITOR CH 25V 0.1U	2	
C102-06		ECUM1H103ZFN	C.CAPACITOR CH 50V 0.01U	5	
C107		ECUM1E104ZFN	C.CAPACITOR CH 25V 0.1U	1	
C108-14		ECUM1H103ZFN	C.CAPACITOR CH 50V 0.01U	7	
C115		ECUM1E104ZFN	C.CAPACITOR CH 25V 0.1U	1	
C116-19		ECUM1H103ZFN	C.CAPACITOR CH 50V 0.01U	4	
C120		ECEA1HU010	E.CAPACITOR 50V 1U	1	
C121-23		ECUM1H103ZFN	C.CAPACITOR CH 50V 0.01U	3	
C124		ECUM1H150JCN	C.CAPACITOR CH 50V 15P	1	
C125		ECUM1H270JCN	C.CAPACITOR CH 50V 27P	1	
C127-38		ECUM1H103ZFN	C.CAPACITOR CH 50V 0.01U	12	
C140		ECUM1H103ZFN	C.CAPACITOR CH 50V 0.01U	1	
C141		ECEA1HU2R2	E.CAPACITOR 50V 2.2U	1	
C142		ECQM1H154JF	P.CAPACITOR 50V 0.15U	1	
C143		ECQM1H104JF	P.CAPACITOR 50V 0.1U	1	
C147,48		ECUM1H103ZFN	C.CAPACITOR CH 50V 0.01U	2	
C151		ECUM1E104ZFN	C.CAPACITOR CH 25V 0.1U	1	
C154		ECUM1H102JCN	C.CAPACITOR CH 50V 1000P	1	
C500-02		ECEA1EU4R7	E.CAPACITOR 25V 4.7U	3	
C503-05		ECEA1HN2R2S	E.CAPACITOR 50V 2.2U	3	
C506-08		ECEA1EU101	E.CAPACITOR 25V 100U	3	
D1		MA151WA	DIODE	1	
D2		MA153	DIODE	1	
D3		MA151K	DIODE	1	
D4,D5		MA151WA	DIODE	2	
D6-D9		MA151K	DIODE	4	
D10-13		MA151K	DIODE	4	

Ref.No.		Part No.	Part Name & Description	Pcs	Remarks
D15		MA151K	DIODE	1	
D16		MA151WK	DIODE	1	
D17		MA151WA	DIODE	1	
D18,19		MA151K	DIODE	2	
D20		MA151WK	DIODE	1	
D500		MA151K	DIODE	1	
D501-06		10E1	DIODE	6	
D507,08		MA151K	DIODE	2	
D509		10E1	DIODE	1	
D510		MA151WK	DIODE	1	
D511		MA3039-H	DIODE	1	
D512		MA3075H	DIODE	1	
D513		MA3051-H	DIODE	1	
D514		MA3056-H	DIODE	1	
D515		MA3100-M	DIODE	1	
IC1		MC14024BF	IC	1	
IC2		MC34051M	IC	1	
IC3		TMPZ84C43AF6	IC	1	
IC4		UPD71054GB	IC	1	
IC5		HD641802F8	IC	1	
IC6		TL7705CPSB	IC	1	
IC7		VSI1119	IC	1	
IC8,C9		MC74HC541F	IC	2	
IC10		MBM221220	IC	1	
IC11		VSI0234	IC	1	
IC13		MC74HC4538F	IC	1	
IC14		MC74HC541F	IC	1	
IC15		MC74HC245AF	IC	1	
IC16,17		MC74HC138AF	IC	2	
IC18		MB89363BPF	IC	1	
IC19,20		MC14094BF	IC	2	
IC21		MB89363BPF	IC	1	
IC24		MC14013BF	IC	1	
IC25,26		MC14027BF	IC	2	
IC27-29		MC14538BF	IC	3	
IC30		MB621176PF	IC	1	
IC31		MB89363BPF	IC	1	
IC32,33		MC14021BF	IC	2	
IC34		MC14094BF	IC	1	
IC35		MB89363BPF	IC	1	
IC36-41		MC14021BF	IC	6	
IC42		MB89363BPF	IC	1	
IC43,44		MC14094BF	IC	2	
IC45		MC14021BF	IC	1	
IC46		M50455-001SP	IC	1	
IC47,48		MC14050BF	IC	2	
IC49		SN74LS38NS	IC	1	
IC50,51		MC74HC132AF	IC	2	
IC52		MC74HC04AF	IC	1	
IC53,54		MC14049UBF	IC	2	
IC55		MC74HC00AF	IC	1	
IC56		M74F32FP	IC	1	
IC57		MN4030BS	IC	1	
IC58		MC74HC541F	IC	1	
IC59		LM2903M	IC	1	
IC60,61		NJM2901M	IC	2	
IC62		MC74HC00AF	IC	1	
IC63		MC74HC138AF	IC	1	
IC64,65		MC14021BF	IC	2	
IC66,67		MC14094BF	IC	2	
IC68		MB89363BPF	IC	1	
IC69		TC74HC190AF	IC	1	
IC71		MC14538BF	IC	1	
IC72		MC74HC86F	IC	1	
IC75		MN4030BS	IC	1	
IC500		PU3124	IC	1	
IC501		PU4124	IC	1	
IC502,03		BA6238AU2M	IC	2	
IC7S		VJS2336A032	CONNECTOR (FEMALE)	1	
IC10S		VJS2336A018	CONNECTOR (FEMALE)	1	

Ref.No.	Part No.	Part Name & Description	Pcs	Remarks
L1	VLP0017	COIL	1	
L2	VLQEL05S150J	COIL 15UH	1	
Q1	2SB710	TRANSISTOR	1	(Q,R)
Q2	DTC144EK	TRANSISTOR-RESISTOR	1	
Q3,Q4	DTC114YK	TRANSISTOR-RESISTOR	2	
Q5	UN2214	TRANSISTOR-RESISTOR	1	
Q7-Q9	DTC144EK	TRANSISTOR-RESISTOR	3	
Q9	UN2214	TRANSISTOR-RESISTOR	1	
Q10-13	DTC144EK	TRANSISTOR-RESISTOR	4	
Q15	2SB710	TRANSISTOR	1	(Q,R)
Q16	2SD602	TRANSISTOR	1	(Q,R)
Q17-22	DTC144EK	TRANSISTOR-RESISTOR	6	
Q25-47	DTC144EK	TRANSISTOR-RESISTOR	23	
Q48	2SD946A	TRANSISTOR	1	
Q49	DTC144EK	TRANSISTOR-RESISTOR	1	
Q500,01	UN2213	TRANSISTOR-RESISTOR	2	
Q502,03	2SB709-R	TRANSISTOR CHIP	2	(Q,R)
Q504	UN2213	TRANSISTOR-RESISTOR	1	
Q505,06	2SB709-R	TRANSISTOR CHIP	2	(Q,R)
Q507	UN2213	TRANSISTOR-RESISTOR	1	
Q508,09	2SB709-R	TRANSISTOR CHIP	2	(Q,R)
Q510-14	UN2213	TRANSISTOR-RESISTOR	5	
Q515	2SB709-R	TRANSISTOR CHIP	1	(Q,R)
		RESISTORS		
R1	ERJ6GEYG223	M.RESISTOR CH 1/10W 22K	1	
R2	ERJ6GEY0R00	M.RESISTOR CH 1/10W 0	1	
R3	ERJ6GEYG223	M.RESISTOR CH 1/10W 22K	1	
R4	ERJ6GEY0R00	M.RESISTOR CH 1/10W 0	1	
R5	ERJ6GEYJ562	M.RESISTOR CH 1/10W 5.6K	1	
R6	ERJ6GEYJ103	M.RESISTOR CH 1/10W 10K	1	
R7-R9	ERJ6GEYJ681	M.RESISTOR CH 1/10W 680	3	
R10	ERJ6GEYJ473	M.RESISTOR CH 1/10W 47K	1	
R11	ERJ6GEYJ152	M.RESISTOR CH 1/10W 1.5K	1	
R12	ERJ6GEYJ101	M.RESISTOR CH 1/10W 100	1	
R13,14	ERJ6GEYJ152	M.RESISTOR CH 1/10W 1.5K	2	
R15	ERJ6GEYJ101	M.RESISTOR CH 1/10W 100	1	
R16	ERJ6GEYJ152	M.RESISTOR CH 1/10W 1.5K	1	
R17	ERJ6GEYJ473	M.RESISTOR CH 1/10W 47K	1	
R18	ERJ6GEYJ472	M.RESISTOR CH 1/10W 4.7K	1	
R19-22	ERJ6GEYJ473	M.RESISTOR CH 1/10W 47K	4	
R23-31	ERJ6GEYJ103	M.RESISTOR CH 1/10W 10K	9	
R32	ERJ6GEYJ472	M.RESISTOR CH 1/10W 4.7K	1	
R33	ERJ6GEYJ102	M.RESISTOR CH 1/10W 1K	1	
R34	ERJ6GEYJ103	M.RESISTOR CH 1/10W 10K	1	
R35	ERJ6GEYJ473	M.RESISTOR CH 1/10W 47K	1	
R36	ERJ6GEYJ103	M.RESISTOR CH 1/10W 10K	1	
R37-47	ERJ6GEYJ473	M.RESISTOR CH 1/10W 47K	11	
R48	ERJ6GEYJ474	M.RESISTOR CH 1/10W 470K	1	
R49	ERJ6GEYJ103	M.RESISTOR CH 1/10W 10K	1	
R50	ERJ6GEYG223	M.RESISTOR CH 1/10W 22K	1	
R51,52	ERJ6GEYJ473	M.RESISTOR CH 1/10W 47K	2	
R53	ERJ6GEYG223	M.RESISTOR CH 1/10W 22K	1	
R54-72	ERJ6GEYJ103	M.RESISTOR CH 1/10W 10K	19	
R73-77	ERJ6GEYJ473	M.RESISTOR CH 1/10W 47K	5	
R79	ERJ6GEYJ473	M.RESISTOR CH 1/10W 47K	1	
R81-85	ERJ6GEYJ473	M.RESISTOR CH 1/10W 47K	5	
R86,87	ERJ6GEYG223	M.RESISTOR CH 1/10W 22K	2	
R88	ERJ6GEYJ473	M.RESISTOR CH 1/10W 47K	1	
R93-96	ERJ6GEYJ473	M.RESISTOR CH 1/10W 47K	4	
R97	ERJ6GEYJ101	M.RESISTOR CH 1/10W 100	1	
R100	ERJ6GEYJ101	M.RESISTOR CH 1/10W 100	1	
R101	ERJ6GEYJ473	M.RESISTOR CH 1/10W 47K	1	
R102,03	ERJ6GEYJ101	M.RESISTOR CH 1/10W 100	2	
R104	ERJ6GEYG223	M.RESISTOR CH 1/10W 22K	1	
R105	ERJ6GEYJ103	M.RESISTOR CH 1/10W 10K	1	
R106	ERJ6GEYJ474	M.RESISTOR CH 1/10W 470K	1	
R107-22	ERJ6GEYJ103	M.RESISTOR CH 1/10W 10K	16	
R123-25	ERJ6GEYJ101	M.RESISTOR CH 1/10W 100	3	

Ref.No.	Part No.	Part Name & Description	Pcs	Remarks
R126,27	ERJ6GEYJ562	M.RESISTOR CH 1/10W 5.6K	2	
R128	ERJ6GEYJ472	M.RESISTOR CH 1/10W 4.7K	1	
R129	ERJ6GEYG223	M.RESISTOR CH 1/10W 22K	1	
R130-32	ERJ6GEYJ473	M.RESISTOR CH 1/10W 47K	3	
R133,34	ERJ6GEYJ562	M.RESISTOR CH 1/10W 5.6K	2	
R136	ERJ6GEYG223	M.RESISTOR CH 1/10W 22K	1	
R137-43	ERJ6GEYJ473	M.RESISTOR CH 1/10W 47K	7	
R144	ERJ6GEYJ332	M.RESISTOR CH 1/10W 3.3K	1	
R145	ERJ6GEYJ101	M.RESISTOR CH 1/10W 100	1	
R146	ERJ6GEYG223	M.RESISTOR CH 1/10W 22K	1	
R147	ERJ6GEYJ332	M.RESISTOR CH 1/10W 3.3K	1	
R148	ERJ6GEYJ101	M.RESISTOR CH 1/10W 100	1	
R149	ERJ6GEYJ102	M.RESISTOR CH 1/10W 1K	1	
R150	ERJ6GEYJ332	M.RESISTOR CH 1/10W 3.3K	1	
R151	ERJ6GEYJ101	M.RESISTOR CH 1/10W 100	1	
R152	ERJ6GEYG223	M.RESISTOR CH 1/10W 22K	1	
R153	ERJ6GEYJ332	M.RESISTOR CH 1/10W 3.3K	1	
R154	ERJ6GEYJ101	M.RESISTOR CH 1/10W 100	1	
R155	ERJ6GEYJ102	M.RESISTOR CH 1/10W 1K	1	
R156,57	ERJ6GEYJ104	M.RESISTOR CH 1/10W 100K	2	
R158	ERJ6GEYJ332	M.RESISTOR CH 1/10W 3.3K	1	
R159	ERJ6GEYJ103	M.RESISTOR CH 1/10W 10K	1	
R160,61	ERJ6GEYJ102	M.RESISTOR CH 1/10W 1K	2	
R162	ERJ6GEYJ332	M.RESISTOR CH 1/10W 3.3K	1	
R163	ERJ6GEYJ103	M.RESISTOR CH 1/10W 10K	1	
R164	ERJ6GEYJ105	M.RESISTOR CH 1/10W 1M	1	
R165	ERJ6GEYG223	M.RESISTOR CH 1/10W 22K	1	
R166	ERJ6GEYJ105	M.RESISTOR CH 1/10W 1M	1	
R167	ERJ6GEYG223	M.RESISTOR CH 1/10W 22K	1	
R168,69	ERJ6GEYJ103	M.RESISTOR CH 1/10W 10K	2	
R170	ERJ6GEYJ104	M.RESISTOR CH 1/10W 100K	1	
R171	VRE0034E623	M.RESISTOR CH 1/10W 62K	1	
R172	ERJ6GEYJ104	M.RESISTOR CH 1/10W 100K	1	
R173-83	ERJ6GEYJ103	M.RESISTOR CH 1/10W 10K	11	
R184-86	ERJ6GEYJ473	M.RESISTOR CH 1/10W 47K	3	
R187-91	ERJ6GEYJ103	M.RESISTOR CH 1/10W 10K	5	
R192,93	ERJ6GEYJ101	M.RESISTOR CH 1/10W 100	2	
R194-01	ERJ6GEYJ103	M.RESISTOR CH 1/10W 10K	8	
R202	ERJ6GEYJ473	M.RESISTOR CH 1/10W 47K	1	
R203-06	ERJ6GEYJ103	M.RESISTOR CH 1/10W 10K	4	
R207,08	ERJ6GEYG223	M.RESISTOR CH 1/10W 22K	2	
R209,10	ERJ6GEYJ122	M.RESISTOR CH 1/10W 1.2K	2	
R211	ERJ6GEYJ101	M.RESISTOR CH 1/10W 100	1	
R212	ERJ6GEYJ474	M.RESISTOR CH 1/10W 470K	1	
R213	ERJ6GEYJ103	M.RESISTOR CH 1/10W 10K	1	
R214	ERJ6GEYG223	M.RESISTOR CH 1/10W 22K	1	
R215	ERJ6GEYJ473	M.RESISTOR CH 1/10W 47K	1	
R216,17	ERJ6GEYG223	M.RESISTOR CH 1/10W 22K	2	
R218,19	ERJ6GEYJ101	M.RESISTOR CH 1/10W 100	2	
R220	ERJ6GEYG223	M.RESISTOR CH 1/10W 22K	1	
R221	ERJ6GEYJ101	M.RESISTOR CH 1/10W 100	1	
R222	ERJ6GEYJ474	M.RESISTOR CH 1/10W 470K	1	
R223	ERJ6GEYJ103	M.RESISTOR CH 1/10W 10K	1	
R224	ERJ6GEYG223	M.RESISTOR CH 1/10W 22K	1	
R225	ERJ6GEYJ102	M.RESISTOR CH 1/10W 1K	1	
R226	ERJ6GEYJ473	M.RESISTOR CH 1/10W 47K	1	
R227	ERJ6GEYJ103	M.RESISTOR CH 1/10W 10K	1	
R228	ERJ6GEYG223	M.RESISTOR CH 1/10W 22K	1	
R229	ERJ6GEYJ473	M.RESISTOR CH 1/10W 47K	1	
R230	ERJ6GEYJ103	M.RESISTOR CH 1/10W 10K	1	
R231	ERJ6GEYJ101	M.RESISTOR CH 1/10W 100	1	
R232	ERJ6GEYG223	M.RESISTOR CH 1/10W 22K	1	
R233,34	ERJ6GEYJ473	M.RESISTOR CH 1/10W 47K	2	
R235	ERJ6GEYG223	M.RESISTOR CH 1/10W 22K	1	
R236-39	ERJ6GEYJ473	M.RESISTOR CH 1/10W 47K	4	
R240	ERJ6GEYJ103	M.RESISTOR CH 1/10W 10K	1	
R241-45	ERJ6GEYJ473	M.RESISTOR CH 1/10W 47K	5	
R247	ERJ6GEYJ103	M.RESISTOR CH 1/10W 10K	1	
R248,49	ERJ6GEYJ102	M.RESISTOR CH 1/10W 1K	2	
R250	ERJ6GEYG223	M.RESISTOR CH 1/10W 22K	1	
R251	ERJ6GEYJ123	M.RESISTOR CH 1/10W 12K	1	
R252	ERJ6GEYJ103	M.RESISTOR CH 1/10W 10K	1	
R253	ERJ6GEYJ393	M.RESISTOR CH 1/10W 39K	1	
R254	ERJ6GEYG223	M.RESISTOR CH 1/10W 22K	1	
R255	ERJ6GEYJ562	M.RESISTOR CH 1/10W 5.6K	1	

Ref.No.		Part No.	Part Name & Description	Pcs	Remarks
R256		ERJ6GEYG223	M.RESISTOR CH 1/10W 22K	1	
R257		ERJ6GEYJ473	M.RESISTOR CH 1/10W 47K	1	
R258		ERJ6GEYJ103	M.RESISTOR CH 1/10W 10K	1	
R259,60		ERJ6GEYG223	M.RESISTOR CH 1/10W 22K	2	
R261		ERJ6GEYJ183	M.RESISTOR CH 1/10W 18K	1	
R262		ERJ6GEYJ103	M.RESISTOR CH 1/10W 10K	1	
R263		ERJ6GEYJ333	M.RESISTOR CH 1/10W 33K	1	
R264,65		ERJ6GEYJ473	M.RESISTOR CH 1/10W 47K	2	
R266,67		ERJ6GEYJ101	M.RESISTOR CH 1/10W 100	2	
R269		ERJ6GEYJ103	M.RESISTOR CH 1/10W 10K	1	
R270		ERJ6GEYJ101	M.RESISTOR CH 1/10W 100	1	
R272-77		ERJ6GEYJ103	M.RESISTOR CH 1/10W 10K	6	
R278-85		ERJ6GEYJ473	M.RESISTOR CH 1/10W 47K	8	
R286		ERJ6GEYJ103	M.RESISTOR CH 1/10W 10K	1	
R287		ERJ6GEYG223	M.RESISTOR CH 1/10W 22K	1	
R288,89		ERJ6GEYJ103	M.RESISTOR CH 1/10W 10K	2	
R290		ERJ6GEYJ473	M.RESISTOR CH 1/10W 47K	1	
R294		ERJ6GEYJ103	M.RESISTOR CH 1/10W 10K	1	
R295		ERJ6GEYJ564	M.RESISTOR CH 1/10W 560K	1	
R296		ERJ6GEYJ473	M.RESISTOR CH 1/10W 47K	1	
R301		ERJ6GEYG563	M.RESISTOR CH 1/10W 56K	1	
R302,03		ERJ6GEYJ333	M.RESISTOR CH 1/10W 33K	2	
R304		ERJ6GEYJ473	M.RESISTOR CH 1/10W 47K	1	
R502		ERJ6GEYJ122	M.RESISTOR CH 1/10W 1.2K	1	
R504		ERJ6GEYJ222	M.RESISTOR CH 1/10W 2.2K	1	
R505		ERJ6GEYG223	M.RESISTOR CH 1/10W 22K	1	
R506		ERJ6GEYJ103	M.RESISTOR CH 1/10W 10K	1	
R507		ERJ6GEYJ102	M.RESISTOR CH 1/10W 1K	1	
R508		ERJ6GEYJ104	M.RESISTOR CH 1/10W 100K	1	
R509		ERJ6GEYJ103	M.RESISTOR CH 1/10W 10K	1	
R510		ERJ6GEYG223	M.RESISTOR CH 1/10W 22K	1	
R511		ERJ6GEYJ102	M.RESISTOR CH 1/10W 1K	1	
R512		ERJ6GEYJ104	M.RESISTOR CH 1/10W 100K	1	
R513		ERJ6GEYJ222	M.RESISTOR CH 1/10W 2.2K	1	
R514		ERJ6GEYG223	M.RESISTOR CH 1/10W 22K	1	
R515		ERJ6GEYJ103	M.RESISTOR CH 1/10W 10K	1	
R516		ERJ6GEYJ102	M.RESISTOR CH 1/10W 1K	1	
R517		ERJ6GEYJ104	M.RESISTOR CH 1/10W 100K	1	
R518		ERJ6GEYG223	M.RESISTOR CH 1/10W 22K	1	
R519		ERJ6GEYJ103	M.RESISTOR CH 1/10W 10K	1	
R520		ERJ6GEYJ102	M.RESISTOR CH 1/10W 1K	1	
R521		ERJ6GEYJ104	M.RESISTOR CH 1/10W 100K	1	
R522		ERJ6GEYJ222	M.RESISTOR CH 1/10W 2.2K	1	
R523		ERJ6GEYG223	M.RESISTOR CH 1/10W 22K	1	
R524		ERJ6GEYJ103	M.RESISTOR CH 1/10W 10K	1	
R525		ERJ6GEYJ102	M.RESISTOR CH 1/10W 1K	1	
R526		ERJ6GEYJ104	M.RESISTOR CH 1/10W 100K	1	
R527		ERJ6GEYG223	M.RESISTOR CH 1/10W 22K	1	
R528		ERJ6GEYJ103	M.RESISTOR CH 1/10W 10K	1	
R529		ERJ6GEYJ102	M.RESISTOR CH 1/10W 1K	1	
R530		ERJ6GEYJ104	M.RESISTOR CH 1/10W 100K	1	
R531,32		ERX1SJ1R0	M.RESISTOR 1W 1.0	2	
R533		ERJ6GEYJ104	M.RESISTOR CH 1/10W 100K	1	
R536		ERJ6GEYJ562	M.RESISTOR CH 1/10W 5.6K	1	
R537		ERJ6GEYJ222	M.RESISTOR CH 1/10W 2.2K	1	
R538		ERJ6GEYJ103	M.RESISTOR CH 1/10W 10K	1	
R539		ERJ6GEYG223	M.RESISTOR CH 1/10W 22K	1	
R540		ERJ6GEYJ102	M.RESISTOR CH 1/10W 1K	1	
R541		ERJ6GEYJ104	M.RESISTOR CH 1/10W 100K	1	
R542		ERJ6GEYJ272	M.RESISTOR CH 1/10W 2.7K	1	
R543		ERJ6GEYJ271	M.RESISTOR CH 1/10W 270	1	
SW1,W2		VSS0223	SWITCH	2	
SW3		VSR0045	SWITCH	1	
SW4-W6		EVQQEJ06K	SWITCH	3	
SW7		VST0096	SWITCH	1	
TP17-19		VJR0646	TEST POINT	3	
TPG1,G2		VJR0646	TEST POINT	2	

Ref.No.		Part No.	Part Name & Description	Pcs	Remarks
VC1		ECV1ZW20X60	V.CAPACITOR 20P	1	
X1		VSX0373	CRYSTAL OSCILLATOR	1	
			MISCELLANEOUS		
		VGH0520	SLIDE SW SHEET	2	
		VML2143	CARD PULLER	1	
		VML2144	CARD PULLER	1	
		VMZ1548	BARRIER	1	
		VSC3058	SHIELD CASE	1	
		VSC3059	SHIELD CASE	1	
		VXA3967	P.C.B. SHIELD PLATE	1	
		XNG26E	NUT	4	
		XNG3ES	NUT	2	
		XSN3+6S	SCREW	2	
		XYNV3+K6FR	SCREW	4	
		XYN26+C10	SCREW	4	

Ref.No.		Part No.	Part Name & Description	Pcs	Remarks
	■	VEP86121F	P.C.BOARD W/COMPONENT		FOR AU-63H
			B1 SYSTEM CONTROL		
B1L		VJP2899B096	CONNECTOR(MALE)	1	
B1R		VJP2899B096	CONNECTOR(MALE)	1	
			CAPACITORS		
C1,C2		ECUM1H331JCN	C.CAPACITOR CH 50V 330P	2	
C3-C5		ECUM1H102JCN	C.CAPACITOR CH 50V 1000P	3	
C6-C9		ECUM1H103ZFN	C.CAPACITOR CH 50V 0.01U	4	
C10		ECEA0JU221	E.CAPACITOR 6.3V 220U	1	
C11		ECEA0JU101	E.CAPACITOR 6.3V 100U	1	
C12,13		ECUM1E104ZFN	C.CAPACITOR CH 25V 0.1U	2	
C14,15		ECUM1H270JCN	C.CAPACITOR CH 50V 27P	2	
C16-18		ECUM1H103ZFN	C.CAPACITOR CH 50V 0.01U	3	
C19		ECEA1HU3R3	E.CAPACITOR 50V 3.3U	1	
C20		ECQM1H104JF	P.CAPACITOR 50V 0.1U	1	
C21-23		ECUM1H103ZFN	C.CAPACITOR CH 50V 0.01U	3	
C25		ECEA0JU471	E.CAPACITOR 6.3V 470U	1	
C26,27		ECUM1H680JCN	C.CAPACITOR CH 50V 68P	2	
C28-33		ECUM1H103ZFN	C.CAPACITOR CH 50V 0.01U	6	
C34		ECUM1E104ZFN	C.CAPACITOR CH 25V 0.1U	1	
C35,36		ECUM1H103ZFN	C.CAPACITOR CH 50V 0.01U	2	
C37		ECEA1CU100	E.CAPACITOR 16V 10U	1	
C38-41		ECUM1E104ZFN	C.CAPACITOR CH 25V 0.1U	4	
C42-47		ECUM1H103ZFN	C.CAPACITOR CH 50V 0.01U	6	
C50		ECUM1H103ZFN	C.CAPACITOR CH 50V 0.01U	1	
C51		ECEA1CU100	E.CAPACITOR 16V 10U	1	
C52		ECUM1E104ZFN	C.CAPACITOR CH 25V 0.1U	1	
C53		ECUM1H103ZFN	C.CAPACITOR CH 50V 0.01U	1	
C75-82		ECUM1H103ZFN	C.CAPACITOR CH 50V 0.01U	8	
C83,84		ECEA1HU010	E.CAPACITOR 50V 1U	2	
C85		ECEA1CN100S	E.CAPACITOR 16V 10U	1	
C86		ECUM1H101JCN	C.CAPACITOR CH 50V 100P	1	
C87		ECUM1H103ZFN	C.CAPACITOR CH 50V 0.01U	1	
C88		ECEA1CN100S	E.CAPACITOR 16V 10U	1	
C89		ECUM1H101JCN	C.CAPACITOR CH 50V 100P	1	
C90		ECUM1H103ZFN	C.CAPACITOR CH 50V 0.01U	1	
C91		ECEA1HU010	E.CAPACITOR 50V 1U	1	
C92		ECUM1H103ZFN	C.CAPACITOR CH 50V 0.01U	1	
C94		ECEA1HU010	E.CAPACITOR 50V 1U	1	
C95		ECUM1H103ZFN	C.CAPACITOR CH 50V 0.01U	1	
C96-99		ECUM1E104ZFN	C.CAPACITOR CH 25V 0.1U	4	
C100,01		ECUM1E104ZFN	C.CAPACITOR CH 25V 0.1U	2	
C105,06		ECUM1H103ZFN	C.CAPACITOR CH 50V 0.01U	2	
C107		ECUM1E104ZFN	C.CAPACITOR CH 25V 0.1U	1	
C108-14		ECUM1H103ZFN	C.CAPACITOR CH 50V 0.01U	7	
C115		ECUM1E104ZFN	C.CAPACITOR CH 25V 0.1U	1	
C116-19		ECUM1H103ZFN	C.CAPACITOR CH 50V 0.01U	4	
C120		ECEA1HU010	E.CAPACITOR 50V 1U	1	
C121-23		ECUM1H103ZFN	C.CAPACITOR CH 50V 0.01U	3	
C124		ECUM1H150JCN	C.CAPACITOR CH 50V 15P	1	
C125		ECUM1H270JCN	C.CAPACITOR CH 50V 27P	1	
C127-38		ECUM1H103ZFN	C.CAPACITOR CH 50V 0.01U	12	
C140		ECUM1H103ZFN	C.CAPACITOR CH 50V 0.01U	1	
C141		ECEA1HU2R2	E.CAPACITOR 50V 2.2U	1	
C142		ECQM1H154JF	P.CAPACITOR 50V 0.15U	1	
C143		ECQM1H104JF	P.CAPACITOR 50V 0.1U	1	
C147,48		ECUM1H103ZFN	C.CAPACITOR CH 50V 0.01U	2	
C151		ECUM1E104ZFN	C.CAPACITOR CH 25V 0.1U	1	
C154		ECUM1H102JCN	C.CAPACITOR CH 50V 1000P	1	
C500-02		ECEA1EU4R7	E.CAPACITOR 25V 4.7U	3	
C503-05		ECEA1HN2R2S	E.CAPACITOR 50V 2.2U	3	
C506-08		ECEA1EU101	E.CAPACITOR 25V 100U	3	

Ref.No.		Part No.	Part Name & Description	Pcs	Remarks
D1		MA151WA	DIODE	1	
D2		MA153	DIODE	1	
D3		MA151K	DIODE	1	
D4,D5		MA151WA	DIODE	2	
D7-D9		MA151K	DIODE	3	
D10-13		MA151K	DIODE	4	
D15		MA151K	DIODE	1	
D16		MA151WK	DIODE	1	
D17		MA151WA	DIODE	1	
D18,19		MA151K	DIODE	2	
D20		MA151WK	DIODE	1	
D500		MA151K	DIODE	1	
D501-06		10E1	DIODE	6	
D507,08		MA151K	DIODE	2	
D509		10E1	DIODE	1	
D510		MA151WK	DIODE	1	
D511		MA3039-H	DIODE	1	
D512		MA3075H	DIODE	1	
D513		MA3051-H	DIODE	1	
D514		MA3056-H	DIODE	1	
D515		MA3100-M	DIODE	1	
IC1		MC14024BF	IC	1	
IC2		MC34051M	IC	1	
IC3		TMPZ84C43AF6	IC	1	
IC4		UPD71054GB	IC	1	
IC5		HD64180ZF8	IC	1	
IC6		TL7705CPSB	IC	1	
IC7		VSI1121	IC	1	
IC8,C9		MC74HC541F	IC	2	
IC10		MBM221220	IC	1	
IC11		VSI0234	IC	1	
IC13		MC74HC4538F	IC	1	
IC14		MC74HC541F	IC	1	
IC15		MC74HC245AF	IC	1	
IC16,17		MC74HC138AF	IC	2	
IC18		MB89363BPF	IC	1	
IC19,20		MC14094BF	IC	2	
IC21		MB89363BPF	IC	1	
IC24		MC14013BF	IC	1	
IC25,26		MC14027BF	IC	2	
IC27-29		MC14538BF	IC	3	
IC30		MB621176PF	IC	1	
IC31		MB89363BPF	IC	1	
IC34		MC14094BF	IC	1	
IC35		MB89363BPF	IC	1	
IC36-41		MC14021BF	IC	6	
IC42		MB89363BPF	IC	1	
IC43,44		MC14094BF	IC	2	
IC45		MC14021BF	IC	1	
IC46		M50455-001SP	IC	1	
IC47,48		MC14050BF	IC	2	
IC49		SN74LS38NS	IC	1	
IC50,51		MC74HC132AF	IC	2	
IC52		MC74HC04AF	IC	1	
IC53,54		MC14049UBF	IC	2	
IC55		MC74HC00AF	IC	1	
IC56		M74F32FP	IC	1	
IC57		MN4030BS	IC	1	
IC58		MC74HC541F	IC	1	
IC59		LM2903M	IC	1	
IC60,61		NJM2901M	IC	2	
IC62		MC74HC00AF	IC	1	
IC63		MC74HC138AF	IC	1	
IC64,65		MC14021BF	IC	2	
IC66,67		MC14094BF	IC	2	
IC68		MB89363BPF	IC	1	
IC69		TC74HC190AF	IC	1	
IC71		MC14538BF	IC	1	
IC72		MC74HC86F	IC	1	
IC75		MN4030BS	IC	1	
IC500		PU3124	IC	1	

Ref.No.	Part No.	Part Name & Description	Pcs	Remarks
IC501	PU4124	IC	1	
IC502,03	BA6238AU2M	IC	2	
IC7S	VJS2336A032	CONNECTOR (FEMALE)	1	
IC10S	VJS2336A018	CONNECTOR (FEMALE)	1	
L1	VLP0017	COIL	1	
L2	VLQEL05S150J	COIL 15UH	1	
Q1	2SB710	TRANSISTOR	1	(Q,R)
Q2	DTC144EK	TRANSISTOR-RESISTOR	1	
Q3,Q4	DTC114YK	TRANSISTOR-RESISTOR	2	
Q5	UN2214	TRANSISTOR-RESISTOR	1	
Q9	UN2214	TRANSISTOR-RESISTOR	1	
Q15	2SB710	TRANSISTOR	1	(Q,R)
Q16	2SD602	TRANSISTOR	1	(Q,R)
Q17-22	DTC144EK	TRANSISTOR-RESISTOR	6	
Q25-27	DTC144EK	TRANSISTOR-RESISTOR	3	
Q29-35	DTC144EK	TRANSISTOR-RESISTOR	7	
Q38-42	DTC144EK	TRANSISTOR-RESISTOR	5	
Q44	DTC144EK	TRANSISTOR-RESISTOR	1	
Q46,47	DTC144EK	TRANSISTOR-RESISTOR	2	
Q48	2SD946A	TRANSISTOR	1	
Q500,01	UN2213	TRANSISTOR-RESISTOR	2	
Q502,03	2SB709-R	TRANSISTOR CHIP	2	(Q,R)
Q504	UN2213	TRANSISTOR-RESISTOR	1	
Q505,06	2SB709-R	TRANSISTOR CHIP	2	(Q,R)
Q507	UN2213	TRANSISTOR-RESISTOR	1	
Q508,09	2SB709-R	TRANSISTOR CHIP	2	(Q,R)
Q510-14	UN2213	TRANSISTOR-RESISTOR	5	
Q515	2SB709-R	TRANSISTOR CHIP	1	(Q,R)
		RESISTORS		
R1	ERJ6GEYG223	M.RESISTOR CH 1/10W 22K	1	
R2	ERJ6GEY0R00	M.RESISTOR CH 1/10W 0	1	
R3	ERJ6GEYG223	M.RESISTOR CH 1/10W 22K	1	
R4	ERJ6GEY0R00	M.RESISTOR CH 1/10W 0	1	
R5	ERJ6GEYJ562	M.RESISTOR CH 1/10W 5.6K	1	
R6	ERJ6GEYJ103	M.RESISTOR CH 1/10W 10K	1	
R7-R9	ERJ6GEYJ681	M.RESISTOR CH 1/10W 680	3	
R10	ERJ6GEYJ473	M.RESISTOR CH 1/10W 47K	1	
R11	ERJ6GEYJ152	M.RESISTOR CH 1/10W 1.5K	1	
R12	ERJ6GEYJ101	M.RESISTOR CH 1/10W 100	1	
R13,14	ERJ6GEYJ152	M.RESISTOR CH 1/10W 1.5K	2	
R15	ERJ6GEYJ101	M.RESISTOR CH 1/10W 100	1	
R16	ERJ6GEYJ152	M.RESISTOR CH 1/10W 1.5K	1	
R17	ERJ6GEYJ473	M.RESISTOR CH 1/10W 47K	1	
R18	ERJ6GEYJ472	M.RESISTOR CH 1/10W 4.7K	1	
R19-22	ERJ6GEYJ473	M.RESISTOR CH 1/10W 47K	4	
R23-31	ERJ6GEYJ103	M.RESISTOR CH 1/10W 10K	9	
R32	ERJ6GEYJ472	M.RESISTOR CH 1/10W 4.7K	1	
R33	ERJ6GEYJ102	M.RESISTOR CH 1/10W 1K	1	
R34	ERJ6GEYJ103	M.RESISTOR CH 1/10W 10K	1	
R35	ERJ6GEYJ473	M.RESISTOR CH 1/10W 47K	1	
R36	ERJ6GEYJ103	M.RESISTOR CH 1/10W 10K	1	
R37-47	ERJ6GEYJ473	M.RESISTOR CH 1/10W 47K	11	
R48	ERJ6GEYJ474	M.RESISTOR CH 1/10W 470K	1	
R49	ERJ6GEYJ103	M.RESISTOR CH 1/10W 10K	1	
R50	ERJ6GEYG223	M.RESISTOR CH 1/10W 22K	1	
R51,52	ERJ6GEYJ473	M.RESISTOR CH 1/10W 47K	2	
R53	ERJ6GEYG223	M.RESISTOR CH 1/10W 22K	1	
R54-72	ERJ6GEYJ103	M.RESISTOR CH 1/10W 10K	19	
R73-77	ERJ6GEYJ473	M.RESISTOR CH 1/10W 47K	5	
R79	ERJ6GEYJ473	M.RESISTOR CH 1/10W 47K	1	
R81-85	ERJ6GEYJ473	M.RESISTOR CH 1/10W 47K	5	
R86,87	ERJ6GEYG223	M.RESISTOR CH 1/10W 22K	2	
R88	ERJ6GEYJ473	M.RESISTOR CH 1/10W 47K	1	
R93-96	ERJ6GEYJ473	M.RESISTOR CH 1/10W 47K	4	
R97	ERJ6GEYJ101	M.RESISTOR CH 1/10W 100	1	
R100	ERJ6GEYJ101	M.RESISTOR CH 1/10W 100	1	

Ref.No.	Part No.	Part Name & Description	Pcs	Remarks
R101	ERJ6GEYJ473	M.RESISTOR CH 1/10W 47K	1	
R102,03	ERJ6GEYJ101	M.RESISTOR CH 1/10W 100	2	
R104	ERJ6GEYG223	M.RESISTOR CH 1/10W 22K	1	
R105	ERJ6GEYJ103	M.RESISTOR CH 1/10W 10K	1	
R106	ERJ6GEYJ474	M.RESISTOR CH 1/10W 470K	1	
R107-22	ERJ6GEYJ103	M.RESISTOR CH 1/10W 10K	16	
R123-25	ERJ6GEYJ101	M.RESISTOR CH 1/10W 100	3	
R126,27	ERJ6GEYJ562	M.RESISTOR CH 1/10W 5.6K	2	
R128	ERJ6GEYJ472	M.RESISTOR CH 1/10W 4.7K	1	
R129	ERJ6GEYG223	M.RESISTOR CH 1/10W 22K	1	
R130-32	ERJ6GEYJ473	M.RESISTOR CH 1/10W 47K	3	
R133,34	ERJ6GEYJ562	M.RESISTOR CH 1/10W 5.6K	2	
R135	ERJ6GEYJ101	M.RESISTOR CH 1/10W 100	1	
R136	ERJ6GEYG223	M.RESISTOR CH 1/10W 22K	1	
R137-43	ERJ6GEYJ473	M.RESISTOR CH 1/10W 47K	7	
R144	ERJ6GEYJ332	M.RESISTOR CH 1/10W 3.3K	1	
R145	ERJ6GEYJ101	M.RESISTOR CH 1/10W 100	1	
R146	ERJ6GEYG223	M.RESISTOR CH 1/10W 22K	1	
R147	ERJ6GEYJ332	M.RESISTOR CH 1/10W 3.3K	1	
R148	ERJ6GEYJ101	M.RESISTOR CH 1/10W 100	1	
R149	ERJ6GEYJ102	M.RESISTOR CH 1/10W 1K	1	
R150	ERJ6GEYJ332	M.RESISTOR CH 1/10W 3.3K	1	
R151	ERJ6GEYJ101	M.RESISTOR CH 1/10W 100	1	
R152	ERJ6GEYG223	M.RESISTOR CH 1/10W 22K	1	
R153	ERJ6GEYJ332	M.RESISTOR CH 1/10W 3.3K	1	
R154	ERJ6GEYJ101	M.RESISTOR CH 1/10W 100	1	
R155	ERJ6GEYJ102	M.RESISTOR CH 1/10W 1K	1	
R156,57	ERJ6GEYJ104	M.RESISTOR CH 1/10W 100K	2	
R158	ERJ6GEYJ332	M.RESISTOR CH 1/10W 3.3K	1	
R159	ERJ6GEYJ103	M.RESISTOR CH 1/10W 10K	1	
R160,61	ERJ6GEYJ102	M.RESISTOR CH 1/10W 1K	2	
R162	ERJ6GEYJ332	M.RESISTOR CH 1/10W 3.3K	1	
R163	ERJ6GEYJ103	M.RESISTOR CH 1/10W 10K	1	
R164	ERJ6GEYJ105	M.RESISTOR CH 1/10W 1M	1	
R165	ERJ6GEYG223	M.RESISTOR CH 1/10W 22K	1	
R166	ERJ6GEYJ105	M.RESISTOR CH 1/10W 1M	1	
R167	ERJ6GEYG223	M.RESISTOR CH 1/10W 22K	1	
R168,69	ERJ6GEYJ103	M.RESISTOR CH 1/10W 10K	2	
R170	ERJ6GEYJ104	M.RESISTOR CH 1/10W 100K	1	
R171	VRB0034E623	M.RESISTOR CH 1/10W 62K	1	
R172	ERJ6GEYJ104	M.RESISTOR CH 1/10W 100K	1	
R173-83	ERJ6GEYJ103	M.RESISTOR CH 1/10W 10K	11	
R184-86	ERJ6GEYJ473	M.RESISTOR CH 1/10W 47K	3	
R187-91	ERJ6GEYJ103	M.RESISTOR CH 1/10W 10K	5	
R192,93	ERJ6GEYJ101	M.RESISTOR CH 1/10W 100	2	
R194-01	ERJ6GEYJ103	M.RESISTOR CH 1/10W 10K	8	
R202	ERJ6GEYJ473	M.RESISTOR CH 1/10W 47K	1	
R203-06	ERJ6GEYJ103	M.RESISTOR CH 1/10W 10K	4	
R207,08	ERJ6GEYG223	M.RESISTOR CH 1/10W 22K	2	
R209,10	ERJ6GEYJ122	M.RESISTOR CH 1/10W 1.2K	2	
R211	ERJ6GEYJ101	M.RESISTOR CH 1/10W 100	1	
R212	ERJ6GEYJ474	M.RESISTOR CH 1/10W 470K	1	
R213	ERJ6GEYJ103	M.RESISTOR CH 1/10W 10K	1	
R214	ERJ6GEYG223	M.RESISTOR CH 1/10W 22K	1	
R215	ERJ6GEYJ473	M.RESISTOR CH 1/10W 47K	1	
R216,17	ERJ6GEYG223	M.RESISTOR CH 1/10W 22K	2	
R218,19	ERJ6GEYJ101	M.RESISTOR CH 1/10W 100	2	
R220	ERJ6GEYG223	M.RESISTOR CH 1/10W 22K	1	
R221	ERJ6GEYJ101	M.RESISTOR CH 1/10W 100	1	
R222	ERJ6GEYJ474	M.RESISTOR CH 1/10W 470K	1	
R223	ERJ6GEYJ103	M.RESISTOR CH 1/10W 10K	1	
R224	ERJ6GEYG223	M.RESISTOR CH 1/10W 22K	1	
R225	ERJ6GEYJ102	M.RESISTOR CH 1/10W 1K	1	
R226	ERJ6GEYJ473	M.RESISTOR CH 1/10W 47K	1	
R227	ERJ6GEYJ103	M.RESISTOR CH 1/10W 10K	1	
R228	ERJ6GEYG223	M.RESISTOR CH 1/10W 22K	1	
R229	ERJ6GEYJ473	M.RESISTOR CH 1/10W 47K	1	
R230	ERJ6GEYJ103	M.RESISTOR CH 1/10W 10K	1	
R231	ERJ6GEYJ101	M.RESISTOR CH 1/10W 100	1	
R232	ERJ6GEYG223	M.RESISTOR CH 1/10W 22K	1	
R233,34	ERJ6GEYJ473	M.RESISTOR CH 1/10W 47K	2	
R235	ERJ6GEYG223	M.RESISTOR CH 1/10W 22K	1	
R236-39	ERJ6GEYJ473	M.RESISTOR CH 1/10W 47K	4	
R240	ERJ6GEYJ103	M.RESISTOR CH 1/10W 10K	1	
R241-45	ERJ6GEYJ473	M.RESISTOR CH 1/10W 47K	5	

Ref.No.		Part No.	Part Name & Description	Pcs	Remarks
R247		ERJ6GEYJ103	M.RESISTOR CH 1/10W 10K	1	
R248,49		ERJ6GEYJ102	M.RESISTOR CH 1/10W 1K	2	
R250		ERJ6GEYG223	M.RESISTOR CH 1/10W 22K	1	
R251		ERJ6GEYJ123	M.RESISTOR CH 1/10W 12K	1	
R252		ERJ6GEYJ103	M.RESISTOR CH 1/10W 10K	1	
R253		ERJ6GEYJ393	M.RESISTOR CH 1/10W 39K	1	
R254		ERJ6GEYG223	M.RESISTOR CH 1/10W 22K	1	
R255		ERJ6GEYJ562	M.RESISTOR CH 1/10W 5.6K	1	
R256		ERJ6GEYG223	M.RESISTOR CH 1/10W 22K	1	
R257		ERJ6GEYJ473	M.RESISTOR CH 1/10W 47K	1	
R258		ERJ6GEYJ103	M.RESISTOR CH 1/10W 10K	1	
R259,60		ERJ6GEYG223	M.RESISTOR CH 1/10W 22K	2	
R261		ERJ6GEYJ183	M.RESISTOR CH 1/10W 18K	1	
R262		ERJ6GEYJ103	M.RESISTOR CH 1/10W 10K	1	
R263		ERJ6GEYJ333	M.RESISTOR CH 1/10W 33K	1	
R264,65		ERJ6GEYJ473	M.RESISTOR CH 1/10W 47K	2	
R266-68		ERJ6GEYJ101	M.RESISTOR CH 1/10W 100	3	
R269		ERJ6GEYJ103	M.RESISTOR CH 1/10W 10K	1	
R270		ERJ6GEYJ101	M.RESISTOR CH 1/10W 100	1	
R272-77		ERJ6GEYJ103	M.RESISTOR CH 1/10W 10K	6	
R278-85		ERJ6GEYJ473	M.RESISTOR CH 1/10W 47K	8	
R286		ERJ6GEYJ103	M.RESISTOR CH 1/10W 10K	1	
R287		ERJ6GEYG223	M.RESISTOR CH 1/10W 22K	1	
R288,89		ERJ6GEYJ103	M.RESISTOR CH 1/10W 10K	2	
R290		ERJ6GEYJ473	M.RESISTOR CH 1/10W 47K	1	
R291,92		ERJ6GEYJ101	M.RESISTOR CH 1/10W 100	2	
R294		ERJ6GEYJ103	M.RESISTOR CH 1/10W 10K	1	
R295		ERJ6GEYJ564	M.RESISTOR CH 1/10W 560K	1	
R296		ERJ6GEYJ473	M.RESISTOR CH 1/10W 47K	1	
R301		ERJ6GEYG563	M.RESISTOR CH 1/10W 56K	1	
R302,03		ERJ6GEYJ333	M.RESISTOR CH 1/10W 33K	2	
R304		ERJ6GEYJ473	M.RESISTOR CH 1/10W 47K	1	
R502		ERJ6GEYJ122	M.RESISTOR CH 1/10W 1.2K	1	
R504		ERJ6GEYJ222	M.RESISTOR CH 1/10W 2.2K	1	
R505		ERJ6GEYG223	M.RESISTOR CH 1/10W 22K	1	
R506		ERJ6GEYJ103	M.RESISTOR CH 1/10W 10K	1	
R507		ERJ6GEYJ102	M.RESISTOR CH 1/10W 1K	1	
R508		ERJ6GEYJ104	M.RESISTOR CH 1/10W 100K	1	
R509		ERJ6GEYJ103	M.RESISTOR CH 1/10W 10K	1	
R510		ERJ6GEYG223	M.RESISTOR CH 1/10W 22K	1	
R511		ERJ6GEYJ102	M.RESISTOR CH 1/10W 1K	1	
R512		ERJ6GEYJ104	M.RESISTOR CH 1/10W 100K	1	
R513		ERJ6GEYJ222	M.RESISTOR CH 1/10W 2.2K	1	
R514		ERJ6GEYG223	M.RESISTOR CH 1/10W 22K	1	
R515		ERJ6GEYJ103	M.RESISTOR CH 1/10W 10K	1	
R516		ERJ6GEYJ102	M.RESISTOR CH 1/10W 1K	1	
R517		ERJ6GEYJ104	M.RESISTOR CH 1/10W 100K	1	
R518		ERJ6GEYG223	M.RESISTOR CH 1/10W 22K	1	
R519		ERJ6GEYJ103	M.RESISTOR CH 1/10W 10K	1	
R520		ERJ6GEYJ102	M.RESISTOR CH 1/10W 1K	1	
R521		ERJ6GEYJ104	M.RESISTOR CH 1/10W 100K	1	
R522		ERJ6GEYJ222	M.RESISTOR CH 1/10W 2.2K	1	
R523		ERJ6GEYG223	M.RESISTOR CH 1/10W 22K	1	
R524		ERJ6GEYJ103	M.RESISTOR CH 1/10W 10K	1	
R525		ERJ6GEYJ102	M.RESISTOR CH 1/10W 1K	1	
R526		ERJ6GEYJ104	M.RESISTOR CH 1/10W 100K	1	
R527		ERJ6GEYG223	M.RESISTOR CH 1/10W 22K	1	
R528		ERJ6GEYJ103	M.RESISTOR CH 1/10W 10K	1	
R529		ERJ6GEYJ102	M.RESISTOR CH 1/10W 1K	1	
R530		ERJ6GEYJ104	M.RESISTOR CH 1/10W 100K	1	
R531,32		ERX1SJ1R0	M.RESISTOR 1W 1.0	2	
R533		ERJ6GEYJ104	M.RESISTOR CH 1/10W 100K	1	
R536		ERJ6GEYJ562	M.RESISTOR CH 1/10W 5.6K	1	
R537		ERJ6GEYJ222	M.RESISTOR CH 1/10W 2.2K	1	
R538		ERJ6GEYJ103	M.RESISTOR CH 1/10W 10K	1	
R539		ERJ6GEYG223	M.RESISTOR CH 1/10W 22K	1	
R540		ERJ6GEYJ102	M.RESISTOR CH 1/10W 1K	1	
R541		ERJ6GEYJ104	M.RESISTOR CH 1/10W 100K	1	
R542		ERJ6GEYJ272	M.RESISTOR CH 1/10W 2.7K	1	
R543		ERJ6GEYJ271	M.RESISTOR CH 1/10W 270	1	
SW1		VSS0223	SWITCH	1	
SW3		VSR0045	SWITCH	1	

Ref.No.		Part No.	Part Name & Description	Pcs	Remarks
SW4-W6		EVQQEJ06K	SWITCH	3	
SW7		VST0096	SWITCH	1	
TP17-19		VJR0646	TEST POINT	3	
TPG1,G2		VJR0646	TEST POINT	2	
VC1		ECV1ZW20X60	V.CAPACITOR 20P	1	
X1		VSX0373	CRYSTAL OSCILLATOR	1	
			MISCELLANEOUS		
		VGH0520	SLIDE SW SHEET	1	
		VGH2426	SLIDE SW SHEET	1	
		VML2143	CARD PULLER	1	
		VML2144	CARD PULLER	1	
		VMZ1548	BARRIER	1	
		VSC3058	SHIELD CASE	1	
		VSC3059	SHIELD CASE	1	
		VXA3967	P.C.B. SHIELD PLATE	1	
		XNG26E	NUT	4	
		XNG3ES	NUT	2	
		XSN3+6S	SCREW	2	
		XYNV3+K6FR	SCREW	4	
		XYN26+C10	SCREW	4	

Ref.No.		Part No.	Part Name & Description	Pcs	Remarks
	■	VEP86121E	P.C.BOARD W/COMPONENT		FOR AU-62H
			B1 SYSTEM CONTROL		
B1L		VJP2899B096	CONNECTOR(MALE)	1	
B1R		VJP2899B096	CONNECTOR(MALE)	1	
			CAPACITORS		
C1,C2		ECUM1H331JCN	C.CAPACITOR CH 50V 330P	2	
C3-C5		ECUM1H102JCN	C.CAPACITOR CH 50V 1000P	3	
C6-C9		ECUM1H103ZFN	C.CAPACITOR CH 50V 0.01U	4	
C10		ECEA0JU221	E.CAPACITOR 6.3V 220U	1	
C11		ECEA0JU101	E.CAPACITOR 6.3V 100U	1	
C12,13		ECUM1E104ZFN	C.CAPACITOR CH 25V 0.1U	2	
C14,15		ECUM1H270JCN	C.CAPACITOR CH 50V 27P	2	
C16-18		ECUM1H103ZFN	C.CAPACITOR CH 50V 0.01U	3	
C19		ECEA1HU3R3	E.CAPACITOR 50V 3.3U	1	
C20		ECQM1H104JF	P.CAPACITOR 50V 0.1U	1	
C21-23		ECUM1H103ZFN	C.CAPACITOR CH 50V 0.01U	3	
C25		ECEA0JU471	E.CAPACITOR 6.3V 470U	1	
C26,27		ECUM1H680JCN	C.CAPACITOR CH 50V 68P	2	
C28-33		ECUM1H103ZFN	C.CAPACITOR CH 50V 0.01U	6	
C34		ECUM1E104ZFN	C.CAPACITOR CH 25V 0.1U	1	
C35,36		ECUM1H103ZFN	C.CAPACITOR CH 50V 0.01U	2	
C37		ECEA1CU100	E.CAPACITOR 16V 10U	1	
C38-41		ECUM1E104ZFN	C.CAPACITOR CH 25V 0.1U	4	
C42-47		ECUM1H103ZFN	C.CAPACITOR CH 50V 0.01U	6	
C50		ECUM1H103ZFN	C.CAPACITOR CH 50V 0.01U	1	
C51		ECEA1CU100	E.CAPACITOR 16V 10U	1	
C52		ECUM1E104ZFN	C.CAPACITOR CH 25V 0.1U	1	
C53		ECUM1H103ZFN	C.CAPACITOR CH 50V 0.01U	1	
C75-82		ECUM1H103ZFN	C.CAPACITOR CH 50V 0.01U	8	
C83,84		ECEA1HU010	E.CAPACITOR 50V 1U	2	
C85		ECEA1CN100S	E.CAPACITOR 16V 10U	1	
C86		ECUM1H101JCN	C.CAPACITOR CH 50V 100P	1	
C87		ECUM1H103ZFN	C.CAPACITOR CH 50V 0.01U	1	
C88		ECEA1CN100S	E.CAPACITOR 16V 10U	1	
C89		ECUM1H101JCN	C.CAPACITOR CH 50V 100P	1	
C90		ECUM1H103ZFN	C.CAPACITOR CH 50V 0.01U	1	
C91		ECEA1HU010	E.CAPACITOR 50V 1U	1	
C92		ECUM1H103ZFN	C.CAPACITOR CH 50V 0.01U	1	
C94		ECEA1HU010	E.CAPACITOR 50V 1U	1	
C95		ECUM1H103ZFN	C.CAPACITOR CH 50V 0.01U	1	
C96-99		ECUM1E104ZFN	C.CAPACITOR CH 25V 0.1U	4	
C100,01		ECUM1E104ZFN	C.CAPACITOR CH 25V 0.1U	2	
C105,06		ECUM1H103ZFN	C.CAPACITOR CH 50V 0.01U	2	
C107		ECUM1E104ZFN	C.CAPACITOR CH 25V 0.1U	1	
C108-14		ECUM1H103ZFN	C.CAPACITOR CH 50V 0.01U	7	
C115		ECUM1E104ZFN	C.CAPACITOR CH 25V 0.1U	1	
C116-19		ECUM1H103ZFN	C.CAPACITOR CH 50V 0.01U	4	
C120		ECEA1HU010	E.CAPACITOR 50V 1U	1	
C121-23		ECUM1H103ZFN	C.CAPACITOR CH 50V 0.01U	3	
C124		ECUM1H150JCN	C.CAPACITOR CH 50V 15P	1	
C125		ECUM1H270JCN	C.CAPACITOR CH 50V 27P	1	
C127-38		ECUM1H103ZFN	C.CAPACITOR CH 50V 0.01U	12	
C140		ECUM1H103ZFN	C.CAPACITOR CH 50V 0.01U	1	
C141		ECEA1HU2R2	E.CAPACITOR 50V 2.2U	1	
C142		ECQM1H154JF	P.CAPACITOR 50V 0.15U	1	
C143		ECQM1H104JF	P.CAPACITOR 50V 0.1U	1	
C147,48		ECUM1H103ZFN	C.CAPACITOR CH 50V 0.01U	2	
C151		ECUM1E104ZFN	C.CAPACITOR CH 25V 0.1U	1	
C154		ECUM1H102JCN	C.CAPACITOR CH 50V 1000P	1	
C500-02		ECEA1EU4R7	E.CAPACITOR 25V 4.7U	3	
C503-05		ECEA1HN2R2S	E.CAPACITOR 50V 2.2U	3	
C506-08		ECEA1EU101	E.CAPACITOR 25V 100U	3	

Ref.No.		Part No.	Part Name & Description	Pcs	Remarks
D1		MA151WA	DIODE	1	
D2		MA153	DIODE	1	
D3		MA151K	DIODE	1	
D4,D5		MA151WA	DIODE	2	
D7-D9		MA151K	DIODE	3	
D10-13		MA151K	DIODE	4	
D15		MA151K	DIODE	1	
D16		MA151WK	DIODE	1	
D17		MA151WA	DIODE	1	
D18,19		MA151K	DIODE	2	
D20		MA151WK	DIODE	1	
D500		MA151K	DIODE	1	
D501-06		10E1	DIODE	6	
D507,08		MA151K	DIODE	2	
D509		10E1	DIODE	1	
D510		MA151WK	DIODE	1	
D511		MA3039-H	DIODE	1	
D512		MA3075H	DIODE	1	
D513		MA3051-H	DIODE	1	
D514		MA3056-H	DIODE	1	
D515		MA3100-M	DIODE	1	
IC1		MC14024BF	IC	1	
IC2		MC34051M	IC	1	
IC3		TMPZ84C43AF6	IC	1	
IC4		UPD71054GB	IC	1	
IC5		HD64180ZF8	IC	1	
IC6		TL7705CPSB	IC	1	
IC7		VSI1120	IC	1	
IC8,C9		MC74HC541F	IC	2	
IC10		MBM221220	IC	1	
IC11		VSI0234	IC	1	
IC13		MC74HC4538F	IC	1	
IC14		MC74HC541F	IC	1	
IC15		MC74HC245AF	IC	1	
IC16,17		MC74HC138AF	IC	2	
IC18		MB89363BPF	IC	1	
IC19,20		MC14094BF	IC	2	
IC21		MB89363BPF	IC	1	
IC24		MC14013BF	IC	1	
IC25,26		MC14027BF	IC	2	
IC27-29		MC14538BF	IC	3	
IC30		MB621176PF	IC	1	
IC31		MB89363BPF	IC	1	
IC34		MC14094BF	IC	1	
IC35		MB89363BPF	IC	1	
IC36-41		MC14021BF	IC	6	
IC42		MB89363BPF	IC	1	
IC43,44		MC14094BF	IC	2	
IC45		MC14021BF	IC	1	
IC46		M50455-001SP	IC	1	
IC47,48		MC14050BF	IC	2	
IC49		SN74LS38NS	IC	1	
IC50,51		MC74HC132AF	IC	2	
IC52		MC74HC04AF	IC	1	
IC53,54		MC14049UBF	IC	2	
IC55		MC74HC00AF	IC	1	
IC56		M74F32FP	IC	1	
IC57		MN4030BS	IC	1	
IC58		MC74HC541F	IC	1	
IC59		LM2903M	IC	1	
IC60,61		NJM2901M	IC	2	
IC62		MC74HC00AF	IC	1	
IC63		MC74HC138AF	IC	1	
IC64,65		MC14021BF	IC	2	
IC66,67		MC14094BF	IC	2	
IC68		MB89363BPF	IC	1	
IC69		TC74HC190AF	IC	1	
IC71		MC14538BF	IC	1	
IC72		MC74HC86F	IC	1	
IC75		MN4030BS	IC	1	
IC500		PU3124	IC	1	

Ref.No.	Part No.	Part Name & Description	Pcs	Remarks
IC501	PU4124	IC	1	
IC502,03	BA6238AU2M	IC	2	
IC7S	VJS2336A032	CONNECTOR (FEMALE)	1	
IC10S	VJS2336A018	CONNECTOR (FEMALE)	1	
L1	VLP0017	COIL	1	
L2	VLQEL05S150J	COIL 150H	1	
Q1	2SB710	TRANSISTOR	1	(Q,R)
Q2	DTC144EK	TRANSISTOR-RESISTOR	1	
Q3,Q4	DTC114YK	TRANSISTOR-RESISTOR	2	
Q5	UN2214	TRANSISTOR-RESISTOR	1	
Q9	UN2214	TRANSISTOR-RESISTOR	1	
Q15	2SB710	TRANSISTOR	1	(Q,R)
Q16	2SD602	TRANSISTOR	1	(Q,R)
Q17-22	DTC144EK	TRANSISTOR-RESISTOR	6	
Q25-27	DTC144EK	TRANSISTOR-RESISTOR	3	
Q29-35	DTC144EK	TRANSISTOR-RESISTOR	7	
Q38-42	DTC144EK	TRANSISTOR-RESISTOR	5	
Q44	DTC144EK	TRANSISTOR-RESISTOR	1	
Q46,47	DTC144EK	TRANSISTOR-RESISTOR	2	
Q48	2SD946A	TRANSISTOR	1	
Q500,01	UN2213	TRANSISTOR-RESISTOR	2	
Q502,03	2SB709-R	TRANSISTOR CHIP	2	(Q,R)
Q504	UN2213	TRANSISTOR-RESISTOR	1	
Q505,06	2SB709-R	TRANSISTOR CHIP	2	(Q,R)
Q507	UN2213	TRANSISTOR-RESISTOR	1	
Q508,09	2SB709-R	TRANSISTOR CHIP	2	(Q,R)
Q510-14	UN2213	TRANSISTOR-RESISTOR	5	
Q515	2SB709-R	TRANSISTOR CHIP	1	(Q,R)
		RESISTORS		
R1	ERJ6GEYG223	M.RESISTOR CH 1/10W 22K	1	
R2	ERJ6GEY0R00	M.RESISTOR CH 1/10W 0	1	
R3	ERJ6GEYG223	M.RESISTOR CH 1/10W 22K	1	
R4	ERJ6GEY0R00	M.RESISTOR CH 1/10W 0	1	
R5	ERJ6GEYJ562	M.RESISTOR CH 1/10W 5.6K	1	
R6	ERJ6GEYJ103	M.RESISTOR CH 1/10W 10K	1	
R7-R9	ERJ6GEYJ681	M.RESISTOR CH 1/10W 680	3	
R10	ERJ6GEYJ473	M.RESISTOR CH 1/10W 47K	1	
R11	ERJ6GEYJ152	M.RESISTOR CH 1/10W 1.5K	1	
R12	ERJ6GEYJ101	M.RESISTOR CH 1/10W 100	1	
R13,14	ERJ6GEYJ152	M.RESISTOR CH 1/10W 1.5K	2	
R15	ERJ6GEYJ101	M.RESISTOR CH 1/10W 100	1	
R16	ERJ6GEYJ152	M.RESISTOR CH 1/10W 1.5K	1	
R17	ERJ6GEYJ473	M.RESISTOR CH 1/10W 47K	1	
R18	ERJ6GEYJ472	M.RESISTOR CH 1/10W 4.7K	1	
R19-22	ERJ6GEYJ473	M.RESISTOR CH 1/10W 47K	4	
R23-31	ERJ6GEYJ103	M.RESISTOR CH 1/10W 10K	9	
R32	ERJ6GEYJ472	M.RESISTOR CH 1/10W 4.7K	1	
R33	ERJ6GEYJ102	M.RESISTOR CH 1/10W 1K	1	
R34	ERJ6GEYJ103	M.RESISTOR CH 1/10W 10K	1	
R35	ERJ6GEYJ473	M.RESISTOR CH 1/10W 47K	1	
R36	ERJ6GEYJ103	M.RESISTOR CH 1/10W 10K	1	
R37-47	ERJ6GEYJ473	M.RESISTOR CH 1/10W 47K	11	
R48	ERJ6GEYJ474	M.RESISTOR CH 1/10W 470K	1	
R49	ERJ6GEYJ103	M.RESISTOR CH 1/10W 10K	1	
R50	ERJ6GEYG223	M.RESISTOR CH 1/10W 22K	1	
R51,52	ERJ6GEYJ473	M.RESISTOR CH 1/10W 47K	2	
R53	ERJ6GEYG223	M.RESISTOR CH 1/10W 22K	1	
R54-72	ERJ6GEYJ103	M.RESISTOR CH 1/10W 10K	19	
R73-77	ERJ6GEYJ473	M.RESISTOR CH 1/10W 47K	5	
R79	ERJ6GEYJ473	M.RESISTOR CH 1/10W 47K	1	
R81-85	ERJ6GEYJ473	M.RESISTOR CH 1/10W 47K	5	
R86,87	ERJ6GEYG223	M.RESISTOR CH 1/10W 22K	2	
R88	ERJ6GEYJ473	M.RESISTOR CH 1/10W 47K	1	
R93-96	ERJ6GEYJ473	M.RESISTOR CH 1/10W 47K	4	
R97	ERJ6GEYJ101	M.RESISTOR CH 1/10W 100	1	
R100	ERJ6GEYJ101	M.RESISTOR CH 1/10W 100	1	

Ref.No.	Part No.	Part Name & Description	Pcs	Remarks
R101	ERJ6GEYJ473	M.RESISTOR CH 1/10W 47K	1	
R102,03	ERJ6GEYJ101	M.RESISTOR CH 1/10W 100	2	
R104	ERJ6GEYG223	M.RESISTOR CH 1/10W 22K	1	
R105	ERJ6GEYJ103	M.RESISTOR CH 1/10W 10K	1	
R106	ERJ6GEYJ474	M.RESISTOR CH 1/10W 470K	1	
R107-22	ERJ6GEYJ103	M.RESISTOR CH 1/10W 10K	16	
R123-25	ERJ6GEYJ101	M.RESISTOR CH 1/10W 100	3	
R126,27	ERJ6GEYJ562	M.RESISTOR CH 1/10W 5.6K	2	
R128	ERJ6GEYJ472	M.RESISTOR CH 1/10W 4.7K	1	
R129	ERJ6GEYG223	M.RESISTOR CH 1/10W 22K	1	
R130-32	ERJ6GEYJ473	M.RESISTOR CH 1/10W 47K	3	
R133,34	ERJ6GEYJ562	M.RESISTOR CH 1/10W 5.6K	2	
R135	ERJ6GEYJ101	M.RESISTOR CH 1/10W 100	1	
R136	ERJ6GEYG223	M.RESISTOR CH 1/10W 22K	1	
R137-43	ERJ6GEYJ473	M.RESISTOR CH 1/10W 47K	7	
R144	ERJ6GEYJ332	M.RESISTOR CH 1/10W 3.3K	1	
R145	ERJ6GEYJ101	M.RESISTOR CH 1/10W 100	1	
R146	ERJ6GEYG223	M.RESISTOR CH 1/10W 22K	1	
R147	ERJ6GEYJ332	M.RESISTOR CH 1/10W 3.3K	1	
R148	ERJ6GEYJ101	M.RESISTOR CH 1/10W 100	1	
R149	ERJ6GEYJ102	M.RESISTOR CH 1/10W 1K	1	
R150	ERJ6GEYJ332	M.RESISTOR CH 1/10W 3.3K	1	
R151	ERJ6GEYJ101	M.RESISTOR CH 1/10W 100	1	
R152	ERJ6GEYG223	M.RESISTOR CH 1/10W 22K	1	
R153	ERJ6GEYJ332	M.RESISTOR CH 1/10W 3.3K	1	
R154	ERJ6GEYJ101	M.RESISTOR CH 1/10W 100	1	
R155	ERJ6GEYJ102	M.RESISTOR CH 1/10W 1K	1	
R156,57	ERJ6GEYJ104	M.RESISTOR CH 1/10W 100K	2	
R158	ERJ6GEYJ332	M.RESISTOR CH 1/10W 3.3K	1	
R159	ERJ6GEYJ103	M.RESISTOR CH 1/10W 10K	1	
R160,61	ERJ6GEYJ102	M.RESISTOR CH 1/10W 1K	2	
R162	ERJ6GEYJ332	M.RESISTOR CH 1/10W 3.3K	1	
R163	ERJ6GEYJ103	M.RESISTOR CH 1/10W 10K	1	
R164	ERJ6GEYJ105	M.RESISTOR CH 1/10W 1M	1	
R165	ERJ6GEYG223	M.RESISTOR CH 1/10W 22K	1	
R166	ERJ6GEYJ105	M.RESISTOR CH 1/10W 1M	1	
R167	ERJ6GEYG223	M.RESISTOR CH 1/10W 22K	1	
R168,69	ERJ6GEYJ103	M.RESISTOR CH 1/10W 10K	2	
R170	ERJ6GEYJ104	M.RESISTOR CH 1/10W 100K	1	
R171	VRE0034E623	M.RESISTOR CH 1/10W 62K	1	
R172	ERJ6GEYJ104	M.RESISTOR CH 1/10W 100K	1	
R173-83	ERJ6GEYJ103	M.RESISTOR CH 1/10W 10K	11	
R184-86	ERJ6GEYJ473	M.RESISTOR CH 1/10W 47K	3	
R187-91	ERJ6GEYJ103	M.RESISTOR CH 1/10W 10K	5	
R192,93	ERJ6GEYJ101	M.RESISTOR CH 1/10W 100	2	
R194-01	ERJ6GEYJ103	M.RESISTOR CH 1/10W 10K	8	
R202	ERJ6GEYJ473	M.RESISTOR CH 1/10W 47K	1	
R203-06	ERJ6GEYJ103	M.RESISTOR CH 1/10W 10K	4	
R207,08	ERJ6GEYG223	M.RESISTOR CH 1/10W 22K	2	
R209,10	ERJ6GEYJ122	M.RESISTOR CH 1/10W 1.2K	2	
R211	ERJ6GEYJ101	M.RESISTOR CH 1/10W 100	1	
R212	ERJ6GEYJ474	M.RESISTOR CH 1/10W 470K	1	
R213	ERJ6GEYJ103	M.RESISTOR CH 1/10W 10K	1	
R214	ERJ6GEYG223	M.RESISTOR CH 1/10W 22K	1	
R215	ERJ6GEYJ473	M.RESISTOR CH 1/10W 47K	1	
R216,17	ERJ6GEYG223	M.RESISTOR CH 1/10W 22K	2	
R218,19	ERJ6GEYJ101	M.RESISTOR CH 1/10W 100	2	
R220	ERJ6GEYG223	M.RESISTOR CH 1/10W 22K	1	
R221	ERJ6GEYJ101	M.RESISTOR CH 1/10W 100	1	
R222	ERJ6GEYJ474	M.RESISTOR CH 1/10W 470K	1	
R223	ERJ6GEYJ103	M.RESISTOR CH 1/10W 10K	1	
R224	ERJ6GEYG223	M.RESISTOR CH 1/10W 22K	1	
R225	ERJ6GEYJ102	M.RESISTOR CH 1/10W 1K	1	
R226	ERJ6GEYJ473	M.RESISTOR CH 1/10W 47K	1	
R227	ERJ6GEYJ103	M.RESISTOR CH 1/10W 10K	1	
R228	ERJ6GEYG223	M.RESISTOR CH 1/10W 22K	1	
R229	ERJ6GEYJ473	M.RESISTOR CH 1/10W 47K	1	
R230	ERJ6GEYJ103	M.RESISTOR CH 1/10W 10K	1	
R231	ERJ6GEYJ101	M.RESISTOR CH 1/10W 100	1	
R232	ERJ6GEYG223	M.RESISTOR CH 1/10W 22K	1	
R233,34	ERJ6GEYJ473	M.RESISTOR CH 1/10W 47K	2	
R235	ERJ6GEYG223	M.RESISTOR CH 1/10W 22K	1	
R236-39	ERJ6GEYJ473	M.RESISTOR CH 1/10W 47K	4	
R240	ERJ6GEYJ103	M.RESISTOR CH 1/10W 10K	1	
R241-45	ERJ6GEYJ473	M.RESISTOR CH 1/10W 47K	5	

Ref.No.	Part No.	Part Name & Description	Pcs	Remarks
R247	ERJ6GEYJ103	M.RESISTOR CH 1/10W 10K	1	
R248,49	ERJ6GEYJ102	M.RESISTOR CH 1/10W 1K	2	
R250	ERJ6GEYG223	M.RESISTOR CH 1/10W 22K	1	
R251	ERJ6GEYJ123	M.RESISTOR CH 1/10W 12K	1	
R252	ERJ6GEYJ103	M.RESISTOR CH 1/10W 10K	1	
R253	ERJ6GEYJ393	M.RESISTOR CH 1/10W 39K	1	
R254	ERJ6GEYG223	M.RESISTOR CH 1/10W 22K	1	
R255	ERJ6GEYJ562	M.RESISTOR CH 1/10W 5.6K	1	
R256	ERJ6GEYG223	M.RESISTOR CH 1/10W 22K	1	
R257	ERJ6GEYJ473	M.RESISTOR CH 1/10W 47K	1	
R258	ERJ6GEYJ103	M.RESISTOR CH 1/10W 10K	1	
R259,60	ERJ6GEYG223	M.RESISTOR CH 1/10W 22K	2	
R261	ERJ6GEYJ183	M.RESISTOR CH 1/10W 18K	1	
R262	ERJ6GEYJ103	M.RESISTOR CH 1/10W 10K	1	
R263	ERJ6GEYJ333	M.RESISTOR CH 1/10W 33K	1	
R264,65	ERJ6GEYJ473	M.RESISTOR CH 1/10W 47K	2	
R266-68	ERJ6GEYJ101	M.RESISTOR CH 1/10W 100	3	
R269	ERJ6GEYJ103	M.RESISTOR CH 1/10W 10K	1	
R270	ERJ6GEYJ101	M.RESISTOR CH 1/10W 100	1	
R272-77	ERJ6GEYJ103	M.RESISTOR CH 1/10W 10K	6	
R278-85	ERJ6GEYJ473	M.RESISTOR CH 1/10W 47K	8	
R286	ERJ6GEYJ103	M.RESISTOR CH 1/10W 10K	1	
R287	ERJ6GEYG223	M.RESISTOR CH 1/10W 22K	1	
R288,89	ERJ6GEYJ103	M.RESISTOR CH 1/10W 10K	2	
R290	ERJ6GEYJ473	M.RESISTOR CH 1/10W 47K	1	
R291,92	ERJ6GEYJ101	M.RESISTOR CH 1/10W 100	2	
R294	ERJ6GEYJ103	M.RESISTOR CH 1/10W 10K	1	
R295	ERJ6GEYJ564	M.RESISTOR CH 1/10W 560K	1	
R296	ERJ6GEYJ473	M.RESISTOR CH 1/10W 47K	1	
R301	ERJ6GEYG563	M.RESISTOR CH 1/10W 56K	1	
R302,03	ERJ6GEYJ333	M.RESISTOR CH 1/10W 33K	2	
R304	ERJ6GEYJ473	M.RESISTOR CH 1/10W 47K	1	
R502	ERJ6GEYJ122	M.RESISTOR CH 1/10W 1.2K	1	
R504	ERJ6GEYJ222	M.RESISTOR CH 1/10W 2.2K	1	
R505	ERJ6GEYG223	M.RESISTOR CH 1/10W 22K	1	
R506	ERJ6GEYJ103	M.RESISTOR CH 1/10W 10K	1	
R507	ERJ6GEYJ102	M.RESISTOR CH 1/10W 1K	1	
R508	ERJ6GEYJ104	M.RESISTOR CH 1/10W 100K	1	
R509	ERJ6GEYJ103	M.RESISTOR CH 1/10W 10K	1	
R510	ERJ6GEYG223	M.RESISTOR CH 1/10W 22K	1	
R511	ERJ6GEYJ102	M.RESISTOR CH 1/10W 1K	1	
R512	ERJ6GEYJ104	M.RESISTOR CH 1/10W 100K	1	
R513	ERJ6GEYJ222	M.RESISTOR CH 1/10W 2.2K	1	
R514	ERJ6GEYG223	M.RESISTOR CH 1/10W 22K	1	
R515	ERJ6GEYJ103	M.RESISTOR CH 1/10W 10K	1	
R516	ERJ6GEYJ102	M.RESISTOR CH 1/10W 1K	1	
R517	ERJ6GEYJ104	M.RESISTOR CH 1/10W 100K	1	
R518	ERJ6GEYG223	M.RESISTOR CH 1/10W 22K	1	
R519	ERJ6GEYJ103	M.RESISTOR CH 1/10W 10K	1	
R520	ERJ6GEYJ102	M.RESISTOR CH 1/10W 1K	1	
R521	ERJ6GEYJ104	M.RESISTOR CH 1/10W 100K	1	
R522	ERJ6GEYJ222	M.RESISTOR CH 1/10W 2.2K	1	
R523	ERJ6GEYG223	M.RESISTOR CH 1/10W 22K	1	
R524	ERJ6GEYJ103	M.RESISTOR CH 1/10W 10K	1	
R525	ERJ6GEYJ102	M.RESISTOR CH 1/10W 1K	1	
R526	ERJ6GEYJ104	M.RESISTOR CH 1/10W 100K	1	
R527	ERJ6GEYG223	M.RESISTOR CH 1/10W 22K	1	
R528	ERJ6GEYJ103	M.RESISTOR CH 1/10W 10K	1	
R529	ERJ6GEYJ102	M.RESISTOR CH 1/10W 1K	1	
R530	ERJ6GEYJ104	M.RESISTOR CH 1/10W 100K	1	
R531,32	ERX1SJ1R0	M.RESISTOR 1W 1.0	2	
R533	ERJ6GEYJ104	M.RESISTOR CH 1/10W 100K	1	
R536	ERJ6GEYJ562	M.RESISTOR CH 1/10W 5.6K	1	
R537	ERJ6GEYJ222	M.RESISTOR CH 1/10W 2.2K	1	
R538	ERJ6GEYJ103	M.RESISTOR CH 1/10W 10K	1	
R539	ERJ6GEYG223	M.RESISTOR CH 1/10W 22K	1	
R540	ERJ6GEYJ102	M.RESISTOR CH 1/10W 1K	1	
R541	ERJ6GEYJ104	M.RESISTOR CH 1/10W 100K	1	
R542	ERJ6GEYJ272	M.RESISTOR CH 1/10W 2.7K	1	
R543	ERJ6GEYJ271	M.RESISTOR CH 1/10W 270	1	
SW1	VSS0223	SWITCH	1	
SW3	VSR0045	SWITCH	1	

Ref.No.	Part No.	Part Name & Description	Pcs	Remarks
SW4-W6	EVQQEJ06K	SWITCH	3	
SW7	VST0096	SWITCH	1	
TP17-19	VJR0646	TEST POINT	3	
TPG1,G2	VJR0646	TEST POINT	2	
VC1	ECV1ZW20X60	V.CAPACITOR 20P	1	
X1	VSX0373	CRYSTAL OSCILLATOR	1	
		MISCELLANEOUS		
	VGH0520	SLIDE SW SHEET	1	
	VGH2426	SLIDE SW SHEET	1	
	VML2143	CARD PULLER	1	
	VML2144	CARD PULLER	1	
	VMZ1548	BARRIER	1	
	VSC3058	SHIELD CASE	1	
	VSC3059	SHIELD CASE	1	
	VXA3967	P.C.B. SHIELD PLATE	1	
	XNG26E	NUT	1	
	XNG3ES	NUT	1	
	XSN3+6S	SCREW	1	
	XYNV3+K6FR	SCREW	1	
	XYN26+C10	SCREW	1	

Ref.No.		Part No.	Part Name & Description	Pcs	Remarks
	■	VEP86089C	P.C.BOARD W/COMPONENT		FOR AU-65H,AU-63H
			B2 TCG/TCR		AU-62H
BAT1,T2		VSB0010	BATTERY	2	
B2L		VJP2899B096	CONNECTOR(MALE)	1	
			CAPACITORS		
C1,C2		ECUM1H220JCN	C.CAPACITOR CH 50V 22P	2	
C3		ECUM1H103ZFN	C.CAPACITOR CH 50V 0.01U	1	
C4		ECQM1H104JF	P.CAPACITOR 50V 0.1U	1	
C5		ECEA1HU010	E.CAPACITOR 50V 1U	1	
C6-C9		ECUM1H103ZFN	C.CAPACITOR CH 50V 0.01U	4	
C10-17		ECUM1H103ZFN	C.CAPACITOR CH 50V 0.01U	8	
C18		ECUM1H390JCN	C.CAPACITOR CH 50V 39P	1	
C19		ECV1ZW30X53	V.CAPACITOR 30P	1	
C20		ECUM1H020CCN	C.CAPACITOR CH 50V 2P	1	
C21		ECUM1H330JCN	C.CAPACITOR CH 50V 33P	1	
C22		ECUM1H103ZFN	C.CAPACITOR CH 50V 0.01U	1	
C23		ECEA1HU2R2	E.CAPACITOR 50V 2.2U	1	
C24-31		ECUM1H103ZFN	C.CAPACITOR CH 50V 0.01U	8	
C32-34		ECUM1H150JCN	C.CAPACITOR CH 50V 15P	3	
C35		ECUM1H180JCN	C.CAPACITOR CH 50V 18P	1	
C36		ECUM1E104ZFN	C.CAPACITOR CH 25V 0.1U	1	
C37		ECEA1CU100	E.CAPACITOR 16V 10U	1	
C38-40		ECUM1H103ZFN	C.CAPACITOR CH 50V 0.01U	3	
C41		ECUM1H680JCN	C.CAPACITOR CH 50V 68P	1	
C42		ECUM1H681JCN	C.CAPACITOR CH 50V 680P	1	
C43		ECUM1H103ZFN	C.CAPACITOR CH 50V 0.01U	1	
C44		ECEA1EU100	E.CAPACITOR 25V 10U	1	
C45		ECUM1H103ZFN	C.CAPACITOR CH 50V 0.01U	1	
C46		ECEA1EU100	E.CAPACITOR 25V 10U	1	
C47		ECUM1H103ZFN	C.CAPACITOR CH 50V 0.01U	1	
C48		ECEA1EU100	E.CAPACITOR 25V 10U	1	
C49		ECUM1H103ZFN	C.CAPACITOR CH 50V 0.01U	1	
C50		ECEA1CU100	E.CAPACITOR 16V 10U	1	
C51		ECEA1HU010	E.CAPACITOR 50V 1U	1	
C52		ECUM1H150JCN	C.CAPACITOR CH 50V 15P	1	
C53,54		ECEA1CU100	E.CAPACITOR 16V 10U	2	
C55-58		ECUM1H103ZFN	C.CAPACITOR CH 50V 0.01U	4	
C59		ECUM1H181JCN	C.CAPACITOR CH 50V 180P	1	
C60,61		ECUM1H103ZFN	C.CAPACITOR CH 50V 0.01U	2	
C62		ECUM1H121JCN	C.CAPACITOR CH 50V 120P	1	
D1,D2		MA151K	DIODE	2	
D3,D4		HZ3ALL	DIODE	2	
D5		MA153	DIODE	1	
D6		MA3024	DIODE	1	
D7		MA153	DIODE	1	
D8,D9		MA151K	DIODE	2	
IC1		UPD78C10CW	IC	1	
IC2		TL7705CPSB	IC	1	
IC3		UPD71055GB	IC	1	
IC4		MB8421-90LPF	IC	1	
IC5		MC74HC373F	IC	1	
IC6		VSI0751	IC	1	
IC7		MC74HC138AF	IC	1	
IC8		UPD7503GFJ35	IC	1	
IC9		MC74HC374AF	IC	1	

Ref.No.		Part No.	Part Name & Description	Pcs	Remarks
IC10		MC74HC374AF	IC	1	
IC11		MN51040VP1	IC	1	
IC12,13		MC14052BF	IC	2	
IC14		MC14053BF	IC	1	(R)
IC15		UPC319G2	IC	1	
IC16		MC74HC08AF	IC	1	
IC17,18		MC74HC32AF	IC	2	
IC19		MC74HC04AF	IC	1	
IC20		SN74LS221NS	IC	1	
IC21		MC74HC74AF	IC	1	
IC6S		VJS2336A028	CONNECTOR (FEMALE)	1	
L1		VLQEL05S101J	COIL 100UH	1	
L2		VLP0017	COIL	1	
L3		VLQEL05S101J	COIL 100UH	1	
L4		VLQEL05S121J	COIL 120UH	1	
L5		VLQEL05S3R3J	COIL 3.3UH	1	
Q1		2SB709-R	TRANSISTOR CHIP	1	(Q,R)
Q2		2SD601-R	TRANSISTOR CHIP	1	(Q,R)
Q3		2SB709-R	TRANSISTOR CHIP	1	(Q,R)
Q4,Q5		2SD601-R	TRANSISTOR CHIP	2	(Q,R)
Q6,Q7		2SB710	TRANSISTOR	2	(Q,R)
Q8		2SB709-R	TRANSISTOR CHIP	1	(Q,R)
Q9		2SD601-R	TRANSISTOR CHIP	1	(Q,R)
			RESISTORS		
R1		ERJ6GEYJ683	M.RESISTOR CH 1/10W 68K	1	
R2		ERJ6GEYJ822	M.RESISTOR CH 1/10W 8.2K	1	
R3		ERJ6GEYJ473	M.RESISTOR CH 1/10W 47K	1	
R4-R6		ERJ6GEYJ103	M.RESISTOR CH 1/10W 10K	3	
R7		ERJ6GEYJ333	M.RESISTOR CH 1/10W 33K	1	
R8,R9		ERJ6GEYJ104	M.RESISTOR CH 1/10W 100K	2	
R10		ERJ6GEYG223	M.RESISTOR CH 1/10W 22K	1	
R11,12		ERJ6GEYJ103	M.RESISTOR CH 1/10W 10K	2	
R13		ERJ6GEYJ104	M.RESISTOR CH 1/10W 100K	1	
R14-18		ERJ6GEYJ103	M.RESISTOR CH 1/10W 10K	5	
R19-22		ERJ6GEYJ104	M.RESISTOR CH 1/10W 100K	4	
R23-25		ERJ6GEYJ154	M.RESISTOR CH 1/10W 150K	3	
R26		ERJ6GEYJ471	M.RESISTOR CH 1/10W 470	1	
R27		ERJ6GEYJ334	M.RESISTOR CH 1/10W 330K	1	
R28		ERJ6GEYG164	M.RESISTOR CH 1/10W 160K	1	
R29		ERJ6GEYJ273	M.RESISTOR CH 1/10W 27K	1	
R30		ERJ6GEYJ823	M.RESISTOR CH 1/10W 82K	1	
R31		ERJ6GEYJ153	M.RESISTOR CH 1/10W 15K	1	
R32		ERJ6GEYJ823	M.RESISTOR CH 1/10W 82K	1	
R33		ERJ6GEYG223	M.RESISTOR CH 1/10W 22K	1	
R34		ERJ6GEYJ103	M.RESISTOR CH 1/10W 10K	1	
R35		ERJ6GEYG223	M.RESISTOR CH 1/10W 22K	1	
R36		ERJ6GEYJ103	M.RESISTOR CH 1/10W 10K	1	
R37		ERJ6GEYJ123	M.RESISTOR CH 1/10W 12K	1	
R38		ERJ6GEYJ273	M.RESISTOR CH 1/10W 27K	1	
R39		ERJ6GEYG563	M.RESISTOR CH 1/10W 56K	1	
R40		ERJ6GEYJ561	M.RESISTOR CH 1/10W 560	1	
R41		ERJ6GEYJ472	M.RESISTOR CH 1/10W 4.7K	1	
R42		ERJ6GEYJ823	M.RESISTOR CH 1/10W 82K	1	
R43		ERJ6GEYG223	M.RESISTOR CH 1/10W 22K	1	
R44		ERJ6GEYJ103	M.RESISTOR CH 1/10W 10K	1	
R45,46		ERJ6GEYJ104	M.RESISTOR CH 1/10W 100K	2	
R48		ERJ6GEYJ102	M.RESISTOR CH 1/10W 1K	1	
R49		ERJ6GEYJ101	M.RESISTOR CH 1/10W 100	1	
R50		ERJ6GEYJ153	M.RESISTOR CH 1/10W 15K	1	
R51		ERJ6GEYJ102	M.RESISTOR CH 1/10W 1K	1	
R52		ERJ6GEYJ222	M.RESISTOR CH 1/10W 2.2K	1	
R53-61		ERJ6GEYJ104	M.RESISTOR CH 1/10W 100K	9	
R62		ERJ6GEYJ473	M.RESISTOR CH 1/10W 47K	1	
R63		ERJ6GEYJ104	M.RESISTOR CH 1/10W 100K	1	
R65		ERJ6GEYJ103	M.RESISTOR CH 1/10W 10K	1	
R66		ERJ6GEYJ104	M.RESISTOR CH 1/10W 100K	1	

Ref.No.		Part No.	Part Name & Description	Pcs	Remarks
R67		ERJ6GEYJ101	M.RESISTOR CH 1/10W 100	1	
R68		ERJ6GEYJ152	M.RESISTOR CH 1/10W 1.5K	1	
R69,70		ERJ6GEYJ682	M.RESISTOR CH 1/10W 6.8K	2	
R71,72		ERJ6GEYJ4R7	M.RESISTOR CH 1/10W 4.7	2	
R73		ERJ6GEYJ680	M.RESISTOR CH 1/10W 68	1	
R74		ERJ6GEYJ152	M.RESISTOR CH 1/10W 1.5K	1	
R75		ERJ6GEYJ394	M.RESISTOR CH 1/10W 390K	1	
R76		ERJ6GEYJ102	M.RESISTOR CH 1/10W 1K	1	
R77		ERJ6GEYJ104	M.RESISTOR CH 1/10W 100K	1	
R78		ERJ6GEYJ562	M.RESISTOR CH 1/10W 5.6K	1	
R79		ERJ6GEYJ122	M.RESISTOR CH 1/10W 1.2K	1	
R80		ERJ6GEYJ332	M.RESISTOR CH 1/10W 3.3K	1	
R81		ERJ6GEYJ104	M.RESISTOR CH 1/10W 100K	1	
R82		ERJ6GEYJ102	M.RESISTOR CH 1/10W 1K	1	
R83		ERJ6GEYJ562	M.RESISTOR CH 1/10W 5.6K	1	
R84		ERJ6GEYJ103	M.RESISTOR CH 1/10W 10K	1	
R85		ERJ6GEYJ683	M.RESISTOR CH 1/10W 68K	1	
R86		ERJ6GEYG563	M.RESISTOR CH 1/10W 56K	1	
R87,88		ERJ6GEYJ104	M.RESISTOR CH 1/10W 100K	2	
R89		ERJ6GEYJ103	M.RESISTOR CH 1/10W 10K	1	
R90		ERJ6GEYG273	M.RESISTOR CH 1/10W 27K	1	
R91		ERJ6GEYJ393	M.RESISTOR CH 1/10W 39K	1	
R92		ERJ6GEYJ104	M.RESISTOR CH 1/10W 100K	1	
SW1		VSS0223	SWITCH	1	
SW4,W5		VSS0223	SWITCH	2	
SW7		VSS0223	SWITCH	1	
TP1-P6		VJR0646	TEST POINT	6	
TPG1		VJR0646	TEST POINT	1	
X1		VSX0357	CRYSTAL OSCILLATOR	1	
X2		VSX0094	CRYSTAL OSCILLATOR	1	
X3		VSX0284	CRYSTAL OSCILLATOR	1	
X4		VSX0098	CRYSTAL OSCILLATOR	1	
			MISCELLANEOUS		
		VGH0520	SLIDE SW SHEET	1	
		VGH2380	SLIDE SW SHEET	1	
		VML2143	CARD PULLER	1	
		VML2144	CARD PULLER	1	
		VMZ1548	BARRIER	1	
		VXA3967	P.C.B. SHIELD PLATE	1	
		XNG26E	NUT	2	
		XNG3ES	NUT	2	
		XSN3+6S	SCREW	2	
		XYNV3+K6FR	SCREW	4	
		XYN26+C10	SCREW	2	

Ref.No.		Part No.	Part Name & Description	Pcs	Remarks
	■	VEP82062A	P.C.BOARD W/COMPONENT		FOR AU-63H
			AT POWER		
C1		ECEA1VU330	E.CAPACITOR 35V 33U	1	
C2		ECEA1EU221	E.CAPACITOR 25V 220U	1	
C3		ECEA1VU330	E.CAPACITOR 35V 33U	1	
C4		ECUM1H103ZFN	C.CAPACITOR CH 50V 0.01U	1	
C5		ECUM1H103KBN	C.CAPACITOR CH 50V 0.01U	1	
C6		ECUM1H102KBN	C.CAPACITOR CH 50V 1000P	1	
C7		ECUM1H103KBN	C.CAPACITOR CH 50V 0.01U	1	
C8,C9		ECWH10H103JR	C.CAPACITOR 50V 0.01U	2	
C10,11		ECWH10H103JR	C.CAPACITOR 50V 0.01U	2	
C12-19		ECQM1H183JF	P.CAPACITOR 50V 0.018U	8	
C20,21		ECCD2H331J	C.CAPACITOR 500V 330P	2	
C22-27		ECEA1VU330	E.CAPACITOR 35V 33U	6	
C28		ECEA1EU331	E.CAPACITOR 25V 330U	1	
C29		ECEA1CU100	E.CAPACITOR 16V 10U	1	
C30-33		ECUM1H103KBN	C.CAPACITOR CH 50V 0.01U	4	
CN350		VJP3079	CONNECTOR (MALE)	1	
D1,D2		1OE1	DIODE	2	
D3		MA151K	DIODE	1	
D4,D5		RP1H	DIODE	2	
D6,D7		ERZC07DK361B	SURGE ABSORBER 360V	2	
IC1		UPC494G	IC	1	
IC2,C3		UPC4558G2	IC	2	
IC4,C5		VCR0111	IC	2	
L1		VLQ0128	COIL 47UH	1	
L2-L5		VLQEL05S101K	COIL 100UH	4	
P1		VJP1143	CONNECTOR(MALE)	1	
Q1		UN2213	TRANSISTOR-RESISTOR	1	
Q2		UN2113	TRANSISTOR-RESISTOR	1	
Q3		2SB709	TRANSISTOR CHIP	1	
Q4,Q5		2SK742	TRANSISTOR	2	
			RESISTORS		
R1		ER050CHD1004	M.RESISTOR 1/2W 1M	1	
R2		ERJ6GEYG223	M.RESISTOR CH 1/10W 22K	1	
R3		ERJ6GEYJ103	M.RESISTOR CH 1/10W 10K	1	
R4		ERJ6GEYJ104	M.RESISTOR CH 1/10W 100K	1	
R5		ERJ6GEYJ103	M.RESISTOR CH 1/10W 10K	1	
R6		ERJ6GEYG682	M.REISITOR CH 1/10W 6.8K	1	
R7		ERJ6GEYG332	M.RESISTOR CH 1/10W 3.3K	1	
R8		ERJ6GEYG223	M.RESISTOR CH 1/10W 22K	1	
R9		ERJ6GEYJ222	M.RESISTOR CH 1/10W 2.2K	1	
R10		ERJ6GEYG822	M.RESISTOR CH 1/10W 8.2K	1	
R11		ERJ6GEYG202	M.RESISTOR CH 1/10W 2K	1	
R12,13		ERJ6GEYJ101	M.RESISTOR CH 1/10W 100	2	

Ref.No.		Part No.	Part Name & Description	Pcs	Remarks
R14,15		ERQ12AJ2R2P	F.RESISTOR 1/2W 2.2	2	
R16		ERJ6GEYG622	M.RESISTOR CH 1/10W 6.2K	1	
R17		ERJ6GEYG332	M.RESISTOR CH 1/10W 3.3K	1	
R18-21		ER025CHD5103	M.RESISTOR 1/4W 510K	4	
R22		ERJ6GEYG123	M.RESISTOR CH 1/10W 12K	1	
R23,24		ERD25TJ474	C.RESISTOR 1/4W 470K	2	
R25		ERSB27G222	THERMISTOR 2.2K	1	
R26		ERJ6GEYG621	M.RESISTOR CH 1/10W 620	1	
R27		ERJ6GEYG272	M.RESISTOR CH 1/10W 2.7K	1	
R28-31		ERJ6GEYG133	M.RESISTOR CH 1/10W 13K	4	
R32		ERSB27G222	THERMISTOR 2.2K	1	
R33		ERJ6GEYG621	M.RESISTOR CH 1/10W 620	1	
R34		ERJ6GEYG272	M.RESISTOR CH 1/10W 2.7K	1	
R35-38		ERJ6GEYG133	M.RESISTOR CH 1/10W 13K	4	
R39		ERJ6GEYG153	M.RESISTOR CH 1/10W 15K	1	
R40		ERJ6GEYJ153	M.RESISTOR CH 1/10W 15K	1	
R41		ER025CKF8253	M.RESISTOR 1/4W 825K	1	
R42		ER025CKF6813	M.RESISTOR 1/4W 681K	1	
R43		ERJ6GEYJ473	M.RESISTOR CH 1/10W 47K	1	
R44		ERDS2TJ103	C.RESISTOR 1/4W 10K	1	
R45		ERJ6GEYG153	M.RESISTOR CH 1/10W 15K	1	
R46		ERJ6GEYJ153	M.RESISTOR CH 1/10W 15K	1	
R47		ER025CKF8253	M.RESISTOR 1/4W 825K	1	
R48		ER025CKF6813	M.RESISTOR 1/4W 681K	1	
R49		ERJ6GEYJ473	M.RESISTOR CH 1/10W 47K	1	
R50		ERDS2TJ103	C.RESISTOR 1/4W 10K	1	
R51		ERJ6GEYG682	M.REISITOR CH 1/10W 6.8K	1	
T1		VLT0537	TRANSFORMER	1	
TP1-P9		VJR0582	PACK PIN	9	
TP10		VJR0582	PACK PIN	1	
TPG1		VJR0582	PACK PIN	1	
VR1		VRV0109B504	V.RESISTOR 500K	1	
VR2,R3		VRV0109B503	V.RESISTOR 50K	2	
			MISCELLANEOUS		
		VMP2738	HOLDER ANGLE	1	
		VSC2298	SHIELD CASE	1	
		VSC2299	SHIELD CASE	1	
		VSC3407	SHIELD CASE	1	
		XTV3+6F	SCREW	2	
	■	VEP84103A	P.C.BOARD W/COMPONENT		FOR AU-65H
			AUDIO INPUT SW		
CN260		VJP3080	CONNECTOR (MALE)	1	
CN262		VJP3080	CONNECTOR (MALE)	1	
			RESISTORS		
R1-R4		ER0S2CKG6200	M.RESISTOR 1/4W 620	4	
SW1,W2		VSS0304	SWITCH	2	

Ref.No.		Part No.	Part Name & Description	Pcs	Remarks
	■	VEP84094G	P.C.BOARD W/COMPONENT		FOR AU-65H
			AUDIO IN/OUT		
	■	VEP80573A	P.C.BOARD W/COMPONENT		ON VEP84095G
			AUDIO IN/OUT SUB		
			CAPACITORS		
C1		ECUM1H470JCN	C.CAPACITOR CH 50V 47P	1	
C2		ECUM1H473ZFN	C.CAPACITOR CH 50V 0.047U	1	
C5		ECUM1H470JCN	C.CAPACITOR CH 50V 47P	1	
C6		ECUM1H473ZFN	C.CAPACITOR CH 50V 0.047U	1	
C101		ECUM1H102JCN	C.CAPACITOR CH 50V 1000P	1	
C102,03		ECEA1CBZ100	E.CAPACITOR 16V 10U	2	
C104,05		ECUM1H330JCN	C.CAPACITOR CH 50V 33P	2	
C106		ECEA1CBZ470	E.CAPACITOR 16V 47U	1	
C107		ECEA1CPZ101	E.CAPACITOR 16V 100U	1	
C108,09		ECEA1CPZ301	E.CAPACITOR 16V 300U	2	
C115-18		ECEA1CPZ100	E.CAPACITOR 16V 10U	4	
C119		ECUM1H330JCN	C.CAPACITOR CH 50V 33P	1	
C201		ECUM1H102JCN	C.CAPACITOR CH 50V 1000P	1	
C202,03		ECEA1CBZ100	E.CAPACITOR 16V 10U	2	
C204,05		ECUM1H330JCN	C.CAPACITOR CH 50V 33P	2	
C206		ECEA1CBZ470	E.CAPACITOR 16V 47U	1	
C207		ECEA1CPZ101	E.CAPACITOR 16V 100U	1	
C208,09		ECEA1CPZ301	E.CAPACITOR 16V 300U	2	
C215-18		ECEA1CPZ100	E.CAPACITOR 16V 10U	4	
C219		ECUM1H330JCN	C.CAPACITOR CH 50V 33P	1	
C307		ECEA1CPZ101	E.CAPACITOR 16V 100U	1	
C308,09		ECEA1CPZ301	E.CAPACITOR 16V 300U	2	
C315-18		ECEA1CPZ100	E.CAPACITOR 16V 10U	4	
C407		ECEA1CPZ101	E.CAPACITOR 16V 100U	1	
C408,09		ECEA1CPZ301	E.CAPACITOR 16V 300U	2	
C415-18		ECEA1CPZ100	E.CAPACITOR 16V 10U	4	
C707		ECEA1CPZ101	E.CAPACITOR 16V 100U	1	
C708,09		ECEA1CPZ301	E.CAPACITOR 16V 300U	2	
C710		ECEA1CBZ100	E.CAPACITOR 16V 10U	1	
C714		ECEA1CBZ100	E.CAPACITOR 16V 10U	1	
C715-18		ECEA1CPZ100	E.CAPACITOR 16V 10U	4	
C801,02		ECEA1EN4R7S	E.CAPACITOR 25V 4.7U	2	
C804,05		ECEA1CPZ101	E.CAPACITOR 16V 100U	2	
C806		ECUM1E104ZFN	C.CAPACITOR CH 25V 0.1U	1	
C807,08		ECEA1CPZ101	E.CAPACITOR 16V 100U	2	
C809		ECUM1E104ZFN	C.CAPACITOR CH 25V 0.1U	1	
C810,11		ECEA1CPZ101	E.CAPACITOR 16V 100U	2	
C812		ECUM1H473ZFN	C.CAPACITOR CH 50V 0.047U	1	
C813,14		ECEA1CPZ101	E.CAPACITOR 16V 100U	2	
C815		ECUM1H473ZFN	C.CAPACITOR CH 50V 0.047U	1	
C816		ECEA1CU101	E.CAPACITOR 16V 100U	1	
C817,18		ECEA1CN330S	E.CAPACITOR 16V 33U	2	
C819		ECEA1VU470	E.CAPACITOR 35V 47U	1	
C820		ECEA1HU3R3	E.CAPACITOR 50V 3.3U	1	
C821		ECEA1VU470	E.CAPACITOR 35V 47U	1	
C822		ECEA1HU3R3	E.CAPACITOR 50V 3.3U	1	
C823		ECEA1CU101	E.CAPACITOR 16V 100U	1	
CN200		VJP3078	CONNECTOR (MALE)	1	
CN201		VJP1231T	CONNECTOR(MALE) 4P	1	
CN202		VJP1230T	CONNECTOR(MALE) 3P	1	
CN203		VJP3079	CONNECTOR (MALE)	1	
CN204		VJP1235T	CONNECTOR(MALE) 8P	1	
CN205,06		VJP1230T	CONNECTOR(MALE) 3P	2	
CN207		VJP3080	CONNECTOR (MALE)	1	
CN208		VJP1230G	CONNECTOR(MALE)	1	
CN211,12		VJP1230R	CONNECTOR(MALE) 3P	2	
CN213		VJP1233T	CONNECTOR(MALE) 6P	1	
CN215		VJP1230B	CONNECTOR(MALE)	1	
CN240		VJP1233G	CONNECTOR(MALE) 6P	1	

Ref.No.		Part No.	Part Name & Description	Pcs	Remarks
D1,D2		MA153	DIODE	2	
D101-04		MA3075M	DIODE	4	
D105		HZ2ALL	DIODE	1	
D106		MA153	DIODE	1	
D107,08		HZ2ALL	DIODE	2	
D109		MA153	DIODE	1	
D110		HZ2ALL	DIODE	1	
D201-04		MA3075M	DIODE	4	
D205		HZ2ALL	DIODE	1	
D206		MA153	DIODE	1	
D207,08		HZ2ALL	DIODE	2	
D209		MA153	DIODE	1	
D210		HZ2ALL	DIODE	1	
D305		HZ2ALL	DIODE	1	
D306		MA153	DIODE	1	
D307,08		HZ2ALL	DIODE	2	
D309		MA153	DIODE	1	
D310		HZ2ALL	DIODE	1	
D405		HZ2ALL	DIODE	1	
D406		MA153	DIODE	1	
D407,08		HZ2ALL	DIODE	2	
D409		MA153	DIODE	1	
D410		HZ2ALL	DIODE	1	
D705		HZ2ALL	DIODE	1	
D706		MA153	DIODE	1	
D707,08		HZ2ALL	DIODE	2	
D709		MA153	DIODE	1	
D710		HZ2ALL	DIODE	1	
D801		MA153	DIODE	1	
D802,03		MA151K	DIODE	2	
IC1		RC4556MB	IC	1	
IC101,02		RC2068MD	IC	2	
IC103		NJM4558M	IC	1	
IC105		VEP80573A	P.C.BOARD W/COMPONENT	1	
IC201		RC2068MD	IC	1	
IC205		VEP80573A	P.C.BOARD W/COMPONENT	1	
IC303		NJM4558M	IC	1	
IC305		VEP80573A	P.C.BOARD W/COMPONENT	1	
IC405		VEP80573A	P.C.BOARD W/COMPONENT	1	
IC703,04		NJM4558M	IC	2	
IC705		VEP80573A	P.C.BOARD W/COMPONENT	1	
IC802		NJM4558M	IC	1	
IC803		AN78N09	IC	1	
IC804		AN79N09	IC	1	
IC805		UPD4053BG	IC	1	
IC806		UPD4052BG	IC	1	
IC808		RC4560MD	IC	1	
P1		VJR0312	CONNECTOR (MALE)	1	
Q1-Q4		2SD1328-R	TRANSISTOR CHIP	4	(Q,R)
Q101		2SC1847-R	TRANSISTOR	1	(R)
Q102		2SA886-R	TRANSISTOR	1	
Q103		2SC1847-R	TRANSISTOR	1	(R)
Q104		2SA886-R	TRANSISTOR	1	
Q201		2SC1847-R	TRANSISTOR	1	(R)
Q202		2SA886-R	TRANSISTOR	1	
Q203		2SC1847-R	TRANSISTOR	1	(R)
Q204		2SA886-R	TRANSISTOR	1	
Q301		2SC1847-R	TRANSISTOR	1	(R)
Q302		2SA886-R	TRANSISTOR	1	
Q303		2SC1847-R	TRANSISTOR	1	(R)
Q304		2SA886-R	TRANSISTOR	1	
Q401		2SC1847-R	TRANSISTOR	1	(R)
Q402		2SA886-R	TRANSISTOR	1	

Ref.No.	Part No.	Part Name & Description	Pcs	Remarks
Q403	2SC1847-R	TRANSISTOR	1	(R)
Q404	2SA886-R	TRANSISTOR	1	
Q701	2SC1847-R	TRANSISTOR	1	(R)
Q702	2SA886-R	TRANSISTOR	1	
Q703	2SC1847-R	TRANSISTOR	1	(R)
Q704	2SA886-R	TRANSISTOR	1	
Q801	2SD602	TRANSISTOR	1	(Q,R)
Q802	2SB710	TRANSISTOR	1	(Q,R)
Q803,04	UN2213	TRANSISTOR-RESISTOR	2	
Q805	UN2114	TRANSISTOR-RESISTOR	1	
Q806	UN2213	TRANSISTOR-RESISTOR	1	
Q807	UN2114	TRANSISTOR-RESISTOR	1	
		RESISTORS		
R1-R3	VRE0034E472	M.RESISTOR CH 1/10W 4.7K	3	
R4	ERJ6GEYJ105	M.RESISTOR CH 1/10W 1M	1	
R5	VRE0034E153	M.RESISTOR CH 1/10W 15K	1	
R6	ERJ6GEYJ221	M.RESISTOR CH 1/10W 220	1	
R7,R8	ERJ6GEYJ103	M.RESISTOR CH 1/10W 10K	2	
R9	ERJ6GEYJ473	M.RESISTOR CH 1/10W 47K	1	
R10	ERJ6GEYJ473	M.RESISTOR CH 1/10W 47K	1	
R11,12	VRE0034E153	M.RESISTOR CH 1/10W 15K	2	
R13,14	VRE0034E472	M.RESISTOR CH 1/10W 4.7K	2	
R15	ERJ6GEYJ105	M.RESISTOR CH 1/10W 1M	1	
R16	VRE0034E153	M.RESISTOR CH 1/10W 15K	1	
R17	ERJ6GEYJ221	M.RESISTOR CH 1/10W 220	1	
R18,19	ERJ6GEYJ103	M.RESISTOR CH 1/10W 10K	2	
R20,21	ERJ6GEYJ473	M.RESISTOR CH 1/10W 47K	2	
R101,02	ERJ6GEYJ752	M.RESISTOR CH 1/10W 7.5K	2	
R103	ERJ6GEYJ391	M.RESISTOR CH 1/10W 390	1	
R104	ERJ6GEYJ621	M.RESISTOR CH 1/10W 620	1	
R105	ERJ6GEYJ122	M.RESISTOR CH 1/10W 1.2K	1	
R106	ERJ6GEYJ471	M.RESISTOR CH 1/10W 470	1	
R108,09	ERJ6GEYJ104	M.RESISTOR CH 1/10W 100K	2	
R110	VRE0034E472	M.RESISTOR CH 1/10W 4.7K	1	
R111	VRE0034E332	M.RESISTOR CH 1/10W 3.3K	1	
R112	VRE0034E222	M.RESISTOR CH 1/10W 2.2K	1	
R113	VRE0034E332	M.RESISTOR CH 1/10W 3.3K	1	
R114-16	VRE0034E472	M.RESISTOR CH 1/10W 4.7K	3	
R118	ERJ6GEYG223	M.RESISTOR CH 1/10W 22K	1	
R119	ERJ6GEYG301	M.RESISTOR CH 1/10W 300	1	
R120	ERJ6GEYG152	M.RESISTOR CH 1/10W 1.5K	1	
R121	ERJ6GEYG332	M.RESISTOR CH 1/10W 3.3K	1	
R122	ERJ6GEYG821	M.RESISTOR CH 1/10W 820	1	
R123	ERJ6GEYG563	M.RESISTOR CH 1/10W 56K	1	
R124	ERJ6GEYG562	M.RESISTOR CH 1/10W 5.6K	1	
R125	ERJ6GEYG222	M.RESISTOR CH 1/10W 2.2K	1	
R126	ERJ6GEYJ681	M.RESISTOR CH 1/10W 680	1	
R127	ERJ6GEYJ122	M.RESISTOR CH 1/10W 1.2K	1	
R128,29	ERG12SJ220	M.RESISTOR 1/2W 22	2	
R130	ERX12SJ4R7	M.RESISTOR 1/2W 4.7	1	
R131	ERJ6GEYJ103	M.RESISTOR CH 1/10W 10K	1	
R132	VRE0034E151	M.RESISTOR CH 1/10W 150	1	
R133	VRE0034E330	M.RESISTOR CH 1/10W 33	1	
R134	ERJ6GEYJ103	M.RESISTOR CH 1/10W 10K	1	
R135,36	ERG12SJ220	M.RESISTOR 1/2W 22	2	
R137	ERX12SJ4R7	M.RESISTOR 1/2W 4.7	1	
R201,02	ERJ6GEYJ752	M.RESISTOR CH 1/10W 7.5K	2	
R203	ERJ6GEYJ391	M.RESISTOR CH 1/10W 390	1	
R204	ERJ6GEYJ621	M.RESISTOR CH 1/10W 620	1	
R205	ERJ6GEYJ122	M.RESISTOR CH 1/10W 1.2K	1	
R206	ERJ6GEYJ471	M.RESISTOR CH 1/10W 470	1	
R208,09	ERJ6GEYJ104	M.RESISTOR CH 1/10W 100K	2	
R210	VRE0034E472	M.RESISTOR CH 1/10W 4.7K	1	
R211	VRE0034E332	M.RESISTOR CH 1/10W 3.3K	1	
R212	VRE0034E222	M.RESISTOR CH 1/10W 2.2K	1	
R213	VRE0034E332	M.RESISTOR CH 1/10W 3.3K	1	
R214-16	VRE0034E472	M.RESISTOR CH 1/10W 4.7K	3	
R218	ERJ6GEYG223	M.RESISTOR CH 1/10W 22K	1	
R219	ERJ6GEYG301	M.RESISTOR CH 1/10W 300	1	
R220	ERJ6GEYG152	M.RESISTOR CH 1/10W 1.5K	1	
R221	ERJ6GEYG332	M.RESISTOR CH 1/10W 3.3K	1	
R222	ERJ6GEYG821	M.RESISTOR CH 1/10W 820	1	

Ref.No.	Part No.	Part Name & Description	Pcs	Remarks
R223	ERJ6GEYG563	M.RESISTOR CH 1/10W 56K	1	
R224	ERJ6GEYG562	M.RESISTOR CH 1/10W 5.6K	1	
R225	ERJ6GEYG222	M.RESISTOR CH 1/10W 2.2K	1	
R226	ERJ6GEYJ681	M.RESISTOR CH 1/10W 680	1	
R227	ERJ6GEYJ122	M.RESISTOR CH 1/10W 1.2K	1	
R228,29	ERG12SJ220	M.RESISTOR 1/2W 22	2	
R230	ERX12SJ4R7	M.RESISTOR 1/2W 4.7	1	
R231	ERJ6GEYJ103	M.RESISTOR CH 1/10W 10K	1	
R232	VRE0034E151	M.RESISTOR CH 1/10W 150	1	
R233	VRE0034E330	M.RESISTOR CH 1/10W 33	1	
R234	ERJ6GEYJ103	M.RESISTOR CH 1/10W 10K	1	
R235,36	ERG12SJ220	M.RESISTOR 1/2W 22	2	
R237	ERX12SJ4R7	M.RESISTOR 1/2W 4.7	1	
R319	ERJ6GEYG301	M.RESISTOR CH 1/10W 300	1	
R320	ERJ6GEYG152	M.RESISTOR CH 1/10W 1.5K	1	
R321	ERJ6GEYG332	M.RESISTOR CH 1/10W 3.3K	1	
R322	ERJ6GEYG821	M.RESISTOR CH 1/10W 820	1	
R323	ERJ6GEYG563	M.RESISTOR CH 1/10W 56K	1	
R324	ERJ6GEYG562	M.RESISTOR CH 1/10W 5.6K	1	
R325	ERJ6GEYG222	M.RESISTOR CH 1/10W 2.2K	1	
R326	ERJ6GEYJ681	M.RESISTOR CH 1/10W 680	1	
R327	ERJ6GEYJ122	M.RESISTOR CH 1/10W 1.2K	1	
R328,29	ERG12SJ220	M.RESISTOR 1/2W 22	2	
R330	ERX12SJ4R7	M.RESISTOR 1/2W 4.7	1	
R331	ERJ6GEYJ103	M.RESISTOR CH 1/10W 10K	1	
R332	VRE0034E151	M.RESISTOR CH 1/10W 150	1	
R333	VRE0034E330	M.RESISTOR CH 1/10W 33	1	
R334	ERJ6GEYJ103	M.RESISTOR CH 1/10W 10K	1	
R335,36	ERG12SJ220	M.RESISTOR 1/2W 22	2	
R337	ERX12SJ4R7	M.RESISTOR 1/2W 4.7	1	
R419	ERJ6GEYG301	M.RESISTOR CH 1/10W 300	1	
R420	ERJ6GEYG152	M.RESISTOR CH 1/10W 1.5K	1	
R421	ERJ6GEYG332	M.RESISTOR CH 1/10W 3.3K	1	
R422	ERJ6GEYG821	M.RESISTOR CH 1/10W 820	1	
R423	ERJ6GEYG563	M.RESISTOR CH 1/10W 56K	1	
R424	ERJ6GEYG562	M.RESISTOR CH 1/10W 5.6K	1	
R425	ERJ6GEYG222	M.RESISTOR CH 1/10W 2.2K	1	
R426	ERJ6GEYJ681	M.RESISTOR CH 1/10W 680	1	
R427	ERJ6GEYJ122	M.RESISTOR CH 1/10W 1.2K	1	
R428,29	ERG12SJ220	M.RESISTOR 1/2W 22	2	
R430	ERX12SJ4R7	M.RESISTOR 1/2W 4.7	1	
R431	ERJ6GEYJ103	M.RESISTOR CH 1/10W 10K	1	
R432	VRE0034E151	M.RESISTOR CH 1/10W 150	1	
R433	VRE0034E330	M.RESISTOR CH 1/10W 33	1	
R434	ERJ6GEYJ103	M.RESISTOR CH 1/10W 10K	1	
R435,36	ERG12SJ220	M.RESISTOR 1/2W 22	2	
R437	ERX12SJ4R7	M.RESISTOR 1/2W 4.7	1	
R726	ERJ6GEYJ102	M.RESISTOR CH 1/10W 1K	1	
R727	ERJ6GEY0R00	M.RESISTOR CH 1/10W 0	1	
R728,29	ERG12SJ220	M.RESISTOR 1/2W 22	2	
R730	ERX12SJ4R7	M.RESISTOR 1/2W 4.7	1	
R731	ERJ6GEYJ103	M.RESISTOR CH 1/10W 10K	1	
R732	VRE0034E151	M.RESISTOR CH 1/10W 150	1	
R733	VRE0034E330	M.RESISTOR CH 1/10W 33	1	
R734	ERJ6GEYJ103	M.RESISTOR CH 1/10W 10K	1	
R735,36	ERG12SJ220	M.RESISTOR 1/2W 22	2	
R737	ERX12SJ4R7	M.RESISTOR 1/2W 4.7	1	
R739	ERJ6GEYJ103	M.RESISTOR CH 1/10W 10K	1	
R741	ERJ6GEYJ103	M.RESISTOR CH 1/10W 10K	1	
R801	ERJ6GEY0R00	M.RESISTOR CH 1/10W 0	1	
R802,03	ERJ6GEYJ104	M.RESISTOR CH 1/10W 100K	2	
R809	ERJ6GEYJ153	M.RESISTOR CH 1/10W 15K	1	
R810	ERJ6GEYJ473	M.RESISTOR CH 1/10W 47K	1	
R811-13	ERJ6GEYG223	M.RESISTOR CH 1/10W 22K	3	
R814,15	ERJ6GEYJ331	M.RESISTOR CH 1/10W 330	2	
R816	ERJ6GEYJ101	M.RESISTOR CH 1/10W 100	1	
R817	ERJ6GEYJ682	M.RESISTOR CH 1/10W 6.8K	1	
R818	ERJ6GEYJ101	M.RESISTOR CH 1/10W 100	1	
R819	ERJ6GEYJ332	M.RESISTOR CH 1/10W 3.3K	1	
R820	ERJ6GEYJ682	M.RESISTOR CH 1/10W 6.8K	1	
R821	ERJ6GEYJ470	M.RESISTOR CH 1/10W 47	1	
R822,23	ERJ6GEYJ822	M.RESISTOR CH 1/10W 8.2K	2	
R824	ERJ6GEYJ470	M.RESISTOR CH 1/10W 47	1	
R825	ERJ6GEYJ362	M.RESISTOR CH 1/10W 3.6K	1	
R826,27	ERJ6GEYJ103	M.RESISTOR CH 1/10W 10K	2	

Ref.No.		Part No.	Part Name & Description	Pcs	Remarks
R828		ERG1SJ220	M.RESISTOR 1W 22	1	
R829		ERJ6GEYJ104	M.RESISTOR CH 1/10W 100K	1	
R830,31		ERJ6GEYJ103	M.RESISTOR CH 1/10W 10K	2	
R832		ERG1SJ220	M.RESISTOR 1W 22	1	
R833		ERJ6GEY0R00	M.RESISTOR CH 1/10W 0	1	
SW101,02		VSS0182	SWITCH	2	
SW301,02		VSS0182	SWITCH	2	
	■	VEP84094C	P.C.BOARD W/COMPONENT		FOR AU-63H,AU-62H
			AUDIO IN/OUT		
	■	VEP80573A	P.C.BOARD W/COMPONENT		ON VEP84094C
			AUDIO IN/OUT SUB		
			CAPACITORS		
C1		ECUM1H470JCN	C.CAPACITOR CH 50V 47P	1	
C2		ECUM1H473ZFN	C.CAPACITOR CH 50V 0.047U	1	
C5		ECUM1H470JCN	C.CAPACITOR CH 50V 47P	1	
C6		ECUM1H473ZFN	C.CAPACITOR CH 50V 0.047U	1	
C107		ECEA1CPZ101	E.CAPACITOR 16V 100U	1	
C108,09		ECEA1CPZ301	E.CAPACITOR 16V 300U	2	
C115-18		ECEA1CPZ100	E.CAPACITOR 16V 10U	4	
C207		ECEA1CPZ101	E.CAPACITOR 16V 100U	1	
C208,09		ECEA1CPZ301	E.CAPACITOR 16V 300U	2	
C215-18		ECEA1CPZ100	E.CAPACITOR 16V 10U	4	
C307		ECEA1CPZ101	E.CAPACITOR 16V 100U	1	
C308,09		ECEA1CPZ301	E.CAPACITOR 16V 300U	2	
C315-18		ECEA1CPZ100	E.CAPACITOR 16V 10U	4	
C407		ECEA1CPZ101	E.CAPACITOR 16V 100U	1	
C408,09		ECEA1CPZ301	E.CAPACITOR 16V 300U	2	
C415-18		ECEA1CPZ100	E.CAPACITOR 16V 10U	4	
C707		ECEA1CPZ101	E.CAPACITOR 16V 100U	1	
C708,09		ECEA1CPZ301	E.CAPACITOR 16V 300U	2	
C710		ECEA1CBZ100	E.CAPACITOR 16V 10U	1	
C714		ECEA1CBZ100	E.CAPACITOR 16V 10U	1	
C715-18		ECEA1CPZ100	E.CAPACITOR 16V 10U	4	
C804,05		ECEA1CPZ101	E.CAPACITOR 16V 100U	2	
C806		ECUM1E104ZFN	C.CAPACITOR CH 25V 0.1U	1	
C807,08		ECEA1CPZ101	E.CAPACITOR 16V 100U	2	
C809		ECUM1E104ZFN	C.CAPACITOR CH 25V 0.1U	1	
C810,11		ECEA1CPZ101	E.CAPACITOR 16V 100U	2	
C812		ECUM1H473ZFN	C.CAPACITOR CH 50V 0.047U	1	
C813,14		ECEA1CPZ101	E.CAPACITOR 16V 100U	2	
C815		ECUM1H473ZFN	C.CAPACITOR CH 50V 0.047U	1	
C816		ECEA1CU101	E.CAPACITOR 16V 100U	1	
C817,18		ECEA1CN330S	E.CAPACITOR 16V 33U	2	
C819		ECEA1VU470	E.CAPACITOR 35V 47U	1	
C820		ECEA1HU3R3	E.CAPACITOR 50V 3.3U	1	
C821		ECEA1VU470	E.CAPACITOR 35V 47U	1	
C822		ECEA1HU3R3	E.CAPACITOR 50V 3.3U	1	
C823		ECEA1CU101	E.CAPACITOR 16V 100U	1	
CN200		VJP3078	CONNECTOR (MALE)	1	
CN201		VJP1231T	CONNECTOR(MALE) 4P	1	
CN202		VJP1230T	CONNECTOR(MALE) 3P	1	
CN203		VJP3079	CONNECTOR (MALE)	1	
CN205,06		VJP1230T	CONNECTOR(MALE) 3P	2	
CN207		VJP3080	CONNECTOR (MALE)	1	
CN211,12		VJP1230R	CONNECTOR(MALE) 3P	2	
CN215		VJP1230B	CONNECTOR(MALE)	1	

Ref.No.		Part No.	Part Name & Description	Pcs	Remarks
D1,D2		MA153	DIODE	2	
D105		HZ2ALL	DIODE	1	
D106		MA153	DIODE	1	
D107,08		HZ2ALL	DIODE	2	
D109		MA153	DIODE	1	
D110		HZ2ALL	DIODE	1	
D205		HZ2ALL	DIODE	1	
D206		MA153	DIODE	1	
D207,08		HZ2ALL	DIODE	2	
D209		MA153	DIODE	1	
D210		HZ2ALL	DIODE	1	
D305		HZ2ALL	DIODE	1	
D306		MA153	DIODE	1	
D307,08		HZ2ALL	DIODE	2	
D309		MA153	DIODE	1	
D310		HZ2ALL	DIODE	1	
D405		HZ2ALL	DIODE	1	
D406		MA153	DIODE	1	
D407,08		HZ2ALL	DIODE	2	
D409		MA153	DIODE	1	
D410		HZ2ALL	DIODE	1	
D705		HZ2ALL	DIODE	1	
D706		MA153	DIODE	1	
D707,08		HZ2ALL	DIODE	2	
D709		MA153	DIODE	1	
D710		HZ2ALL	DIODE	1	
D802,03		MA151K	DIODE	2	
IC1		RC4556MB	IC	1	
IC103		NJM4558M	IC	1	
IC105		VEP80573A	P.C.BOARD W/COMPONENT	1	
IC205		VEP80573A	P.C.BOARD W/COMPONENT	1	
IC303		NJM4558M	IC	1	
IC305		VEP80573A	P.C.BOARD W/COMPONENT	1	
IC405		VEP80573A	P.C.BOARD W/COMPONENT	1	
IC703,04		NJM4558M	IC	2	
IC705		VEP80573A	P.C.BOARD W/COMPONENT	1	
IC803		AN78N09	IC	1	
IC804		AN79N09	IC	1	
IC805		UPD4053BG	IC	1	
IC806		UPD4052BG	IC	1	
IC808		RC4560MD	IC	1	
P1		VJR0312	CONNECTOR (MALE)	1	
Q1-Q4		2SD1328-R	TRANSISTOR CHIP	4	(Q,R)
Q101		2SC1847-R	TRANSISTOR	1	(R)
Q102		2SA886-R	TRANSISTOR	1	
Q103		2SC1847-R	TRANSISTOR	1	(R)
Q104		2SA886-R	TRANSISTOR	1	
Q201		2SC1847-R	TRANSISTOR	1	(R)
Q202		2SA886-R	TRANSISTOR	1	
Q203		2SC1847-R	TRANSISTOR	1	(R)
Q204		2SA886-R	TRANSISTOR	1	
Q301		2SC1847-R	TRANSISTOR	1	(R)
Q302		2SA886-R	TRANSISTOR	1	
Q303		2SC1847-R	TRANSISTOR	1	(R)
Q304		2SA886-R	TRANSISTOR	1	
Q401		2SC1847-R	TRANSISTOR	1	(R)
Q402		2SA886-R	TRANSISTOR	1	
Q403		2SC1847-R	TRANSISTOR	1	(R)
Q404		2SA886-R	TRANSISTOR	1	
Q701		2SC1847-R	TRANSISTOR	1	(R)
Q702		2SA886-R	TRANSISTOR	1	
Q703		2SC1847-R	TRANSISTOR	1	(R)
Q704		2SA886-R	TRANSISTOR	1	
Q801		2SD602	TRANSISTOR	1	(Q,R)
Q802		2SB710	TRANSISTOR	1	(Q,R)
Q803,04		UN2213	TRANSISTOR-RESISTOR	2	

Ref.No.		Part No.	Part Name & Description	Pcs	Remarks
Q805		UN2114	TRANSISTOR-RESISTOR	1	
Q806		UN2213	TRANSISTOR-RESISTOR	1	
Q807		UN2114	TRANSISTOR-RESISTOR	1	
			RESISTORS		
R1-R3		VRE0034E472	M.RESISTOR CH 1/10W 4.7K	3	
R4		ERJ6GEYJ105	M.RESISTOR CH 1/10W 1M	1	
R5		VRE0034E153	M.RESISTOR CH 1/10W 15K	1	
R6		ERJ6GEYJ221	M.RESISTOR CH 1/10W 220	1	
R7,R8		ERJ6GEYJ103	M.RESISTOR CH 1/10W 10K	2	
R9		ERJ6GEYJ473	M.RESISTOR CH 1/10W 47K	1	
R10		ERJ6GEYJ473	M.RESISTOR CH 1/10W 47K	1	
R11,12		VRE0034E153	M.RESISTOR CH 1/10W 15K	2	
R13,14		VRE0034E472	M.RESISTOR CH 1/10W 4.7K	2	
R15		ERJ6GEYJ105	M.RESISTOR CH 1/10W 1M	1	
R16		VRE0034E153	M.RESISTOR CH 1/10W 15K	1	
R17		ERJ6GEYJ221	M.RESISTOR CH 1/10W 220	1	
R18,19		ERJ6GEYJ103	M.RESISTOR CH 1/10W 10K	2	
R20,21		ERJ6GEYJ473	M.RESISTOR CH 1/10W 47K	2	
R119		ERJ6GEYG301	M.RESISTOR CH 1/10W 300	1	
R120		ERJ6GEYG152	M.RESISTOR CH 1/10W 1.5K	1	
R121		ERJ6GEYG332	M.RESISTOR CH 1/10W 3.3K	1	
R122		ERJ6GEYG821	M.RESISTOR CH 1/10W 820	1	
R123		ERJ6GEYG563	M.RESISTOR CH 1/10W 56K	1	
R124		ERJ6GEYG562	M.RESISTOR CH 1/10W 5.6K	1	
R125		ERJ6GEYG222	M.RESISTOR CH 1/10W 2.2K	1	
R126		ERJ6GEYJ681	M.RESISTOR CH 1/10W 680	1	
R127		ERJ6GEYJ122	M.RESISTOR CH 1/10W 1.2K	1	
R128,29		ERG12SJ220	M.RESISTOR 1/2W 22	2	
R130		ERX12SJ4R7	M.RESISTOR 1/2W 4.7	1	
R131		ERJ6GEYJ103	M.RESISTOR CH 1/10W 10K	1	
R132		VRE0034E151	M.RESISTOR CH 1/10W 150	1	
R133		VRE0034E330	M.RESISTOR CH 1/10W 33	1	
R134		ERJ6GEYJ103	M.RESISTOR CH 1/10W 10K	1	
R135,36		ERG12SJ220	M.RESISTOR 1/2W 22	2	
R137		ERX12SJ4R7	M.RESISTOR 1/2W 4.7	1	
R219		ERJ6GEYG301	M.RESISTOR CH 1/10W 300	1	
R220		ERJ6GEYG152	M.RESISTOR CH 1/10W 1.5K	1	
R221		ERJ6GEYG332	M.RESISTOR CH 1/10W 3.3K	1	
R222		ERJ6GEYG821	M.RESISTOR CH 1/10W 820	1	
R223		ERJ6GEYG563	M.RESISTOR CH 1/10W 56K	1	
R224		ERJ6GEYG562	M.RESISTOR CH 1/10W 5.6K	1	
R225		ERJ6GEYG222	M.RESISTOR CH 1/10W 2.2K	1	
R226		ERJ6GEYJ681	M.RESISTOR CH 1/10W 680	1	
R227		ERJ6GEYJ122	M.RESISTOR CH 1/10W 1.2K	1	
R228,29		ERG12SJ220	M.RESISTOR 1/2W 22	2	
R230		ERX12SJ4R7	M.RESISTOR 1/2W 4.7	1	
R231		ERJ6GEYJ103	M.RESISTOR CH 1/10W 10K	1	
R232		VRE0034E151	M.RESISTOR CH 1/10W 150	1	
R233		VRE0034E330	M.RESISTOR CH 1/10W 33	1	
R234		ERJ6GEYJ103	M.RESISTOR CH 1/10W 10K	1	
R235,36		ERG12SJ220	M.RESISTOR 1/2W 22	2	
R237		ERX12SJ4R7	M.RESISTOR 1/2W 4.7	1	
R319		ERJ6GEYG301	M.RESISTOR CH 1/10W 300	1	
R320		ERJ6GEYG152	M.RESISTOR CH 1/10W 1.5K	1	
R321		ERJ6GEYG332	M.RESISTOR CH 1/10W 3.3K	1	
R322		ERJ6GEYG821	M.RESISTOR CH 1/10W 820	1	
R323		ERJ6GEYG563	M.RESISTOR CH 1/10W 56K	1	
R324		ERJ6GEYG562	M.RESISTOR CH 1/10W 5.6K	1	
R325		ERJ6GEYG222	M.RESISTOR CH 1/10W 2.2K	1	
R326		ERJ6GEYJ681	M.RESISTOR CH 1/10W 680	1	
R327		ERJ6GEYJ122	M.RESISTOR CH 1/10W 1.2K	1	
R328,29		ERG12SJ220	M.RESISTOR 1/2W 22	2	
R330		ERX12SJ4R7	M.RESISTOR 1/2W 4.7	1	
R331		ERJ6GEYJ103	M.RESISTOR CH 1/10W 10K	1	
R332		VRE0034E151	M.RESISTOR CH 1/10W 150	1	
R333		VRE0034E330	M.RESISTOR CH 1/10W 33	1	
R334		ERJ6GEYJ103	M.RESISTOR CH 1/10W 10K	1	
R335,36		ERG12SJ220	M.RESISTOR 1/2W 22	2	
R337		ERX12SJ4R7	M.RESISTOR 1/2W 4.7	1	
R419		ERJ6GEYG301	M.RESISTOR CH 1/10W 300	1	
R420		ERJ6GEYG152	M.RESISTOR CH 1/10W 1.5K	1	
R421		ERJ6GEYG332	M.RESISTOR CH 1/10W 3.3K	1	

Ref.No.		Part No.	Part Name & Description	Pcs	Remarks
R422		ERJ6GEYG821	M.RESISTOR CH 1/10W 820	1	
R423		ERJ6GEYG563	M.RESISTOR CH 1/10W 56K	1	
R424		ERJ6GEYG562	M.RESISTOR CH 1/10W 5.6K	1	
R425		ERJ6GEYG222	M.RESISTOR CH 1/10W 2.2K	1	
R426		ERJ6GEYJ681	M.RESISTOR CH 1/10W 680	1	
R427		ERJ6GEYJ122	M.RESISTOR CH 1/10W 1.2K	1	
R428,29		ERG12SJ220	M.RESISTOR 1/2W 22	2	
R430		ERX12SJ4R7	M.RESISTOR 1/2W 4.7	1	
R431		ERJ6GEYJ103	M.RESISTOR CH 1/10W 10K	1	
R432		VRE0034E151	M.RESISTOR CH 1/10W 150	1	
R433		VRE0034E330	M.RESISTOR CH 1/10W 33	1	
R434		ERJ6GEYJ103	M.RESISTOR CH 1/10W 10K	1	
R435,36		ERG12SJ220	M.RESISTOR 1/2W 22	2	
R437		ERX12SJ4R7	M.RESISTOR 1/2W 4.7	1	
R726		ERJ6GEYJ102	M.RESISTOR CH 1/10W 1K	1	
R727		ERJ6GEY0R00	M.RESISTOR CH 1/10W 0	1	
R728,29		ERG12SJ220	M.RESISTOR 1/2W 22	2	
R730		ERX12SJ4R7	M.RESISTOR 1/2W 4.7	1	
R731		ERJ6GEYJ103	M.RESISTOR CH 1/10W 10K	1	
R732		VRE0034E151	M.RESISTOR CH 1/10W 150	1	
R733		VRE0034E330	M.RESISTOR CH 1/10W 33	1	
R734		ERJ6GEYJ103	M.RESISTOR CH 1/10W 10K	1	
R735,36		ERG12SJ220	M.RESISTOR 1/2W 22	2	
R737		ERX12SJ4R7	M.RESISTOR 1/2W 4.7	1	
R739		ERJ6GEYJ103	M.RESISTOR CH 1/10W 10K	1	
R741		ERJ6GEYJ103	M.RESISTOR CH 1/10W 10K	1	
R811-13		ERJ6GEYG223	M.RESISTOR CH 1/10W 22K	3	
R814,15		ERJ6GEYJ331	M.RESISTOR CH 1/10W 330	2	
R816		ERJ6GEYJ101	M.RESISTOR CH 1/10W 100	1	
R817		ERJ6GEYJ682	M.RESISTOR CH 1/10W 6.8K	1	
R818		ERJ6GEYJ101	M.RESISTOR CH 1/10W 100	1	
R819		ERJ6GEYJ332	M.RESISTOR CH 1/10W 3.3K	1	
R820		ERJ6GEYJ682	M.RESISTOR CH 1/10W 6.8K	1	
R821		ERJ6GEYJ470	M.RESISTOR CH 1/10W 47	1	
R822,23		ERJ6GEYJ822	M.RESISTOR CH 1/10W 8.2K	2	
R824		ERJ6GEYJ470	M.RESISTOR CH 1/10W 47	1	
R825		ERJ6GEYJ362	M.RESISTOR CH 1/10W 3.6K	1	
R826,27		ERJ6GEYJ103	M.RESISTOR CH 1/10W 10K	2	
R828		ERG1SJ220	M.RESISTOR 1W 22	1	
R829		ERJ6GEYJ104	M.RESISTOR CH 1/10W 100K	1	
R830,31		ERJ6GEYJ103	M.RESISTOR CH 1/10W 10K	2	
R832		ERG1SJ220	M.RESISTOR 1W 22	1	
R833		ERJ6GEY0R00	M.RESISTOR CH 1/10W 0	1	
SW102		VSS0182	SWITCH	1	
SW302		VSS0182	SWITCH	1	
	■	VEP84102A	P.C.BOARD W/COMPONENT		FOR AU-65H
			AUDIO VR		
			CAPACITORS		
C1-C8		ECEA1CN100S	E.CAPACITOR 16V 10U	8	
C9		ECEA1CU101	E.CAPACITOR 16V 100U	1	
C10-12		ECEA1CU101	E.CAPACITOR 16V 100U	3	
C13,14		ECEA1CN100S	E.CAPACITOR 16V 10U	2	
CN161		VJP1231T	CONNECTOR(MALE) 4P	1	
CN163		VJP3082	CONNECTOR (MALE)	1	
CN164,65		VJP3078	CONNECTOR (MALE)	2	
CN166		VJP1231R	CONNECTOR(MALE) 4P	1	
CN167		VJP1236T	CONNECTOR(MALE) 9P	1	

Ref.No.		Part No.	Part Name & Description	Pcs	Remarks
CN168		VJP1235T	CONNECTOR(MALE) 8P	1	
IC1-C4		NJM4558M	IC	4	
IC5		AN78N09	IC	1	
IC6		AN79N09	IC	1	
IC7		MC14053BF	IC	1	
IC8,C9		NJM4558M	IC	2	
			RESISTORS		
R1		ERJ6GEYJ103	M.RESISTOR CH 1/10W 10K	1	
R2		ERJ6GEYJ102	M.RESISTOR CH 1/10W 1K	1	
R3		ERJ6GEYJ104	M.RESISTOR CH 1/10W 100K	1	
R4		ERJ6GEYJ102	M.RESISTOR CH 1/10W 1K	1	
R5		ERJ6GEYJ332	M.RESISTOR CH 1/10W 3.3K	1	
R6		ERJ6GEYJ104	M.RESISTOR CH 1/10W 100K	1	
R7		ERJ6GEYJ103	M.RESISTOR CH 1/10W 10K	1	
R8		ERJ6GEYJ102	M.RESISTOR CH 1/10W 1K	1	
R9		ERJ6GEYJ104	M.RESISTOR CH 1/10W 100K	1	
R10,11		ERJ6GEYJ102	M.RESISTOR CH 1/10W 1K	2	
R12		ERJ6GEYJ104	M.RESISTOR CH 1/10W 100K	1	
R13		ERJ6GEYJ103	M.RESISTOR CH 1/10W 10K	1	
R14		ERJ6GEYJ102	M.RESISTOR CH 1/10W 1K	1	
R15		ERJ6GEYJ104	M.RESISTOR CH 1/10W 100K	1	
R16		ERJ6GEYJ102	M.RESISTOR CH 1/10W 1K	1	
R17		ERJ6GEYJ332	M.RESISTOR CH 1/10W 3.3K	1	
R18		ERJ6GEYJ104	M.RESISTOR CH 1/10W 100K	1	
R19		ERJ6GEYJ103	M.RESISTOR CH 1/10W 10K	1	
R20		ERJ6GEYJ102	M.RESISTOR CH 1/10W 1K	1	
R21		ERJ6GEYJ104	M.RESISTOR CH 1/10W 100K	1	
R22,23		ERJ6GEYJ102	M.RESISTOR CH 1/10W 1K	2	
R24		ERJ6GEYJ104	M.RESISTOR CH 1/10W 100K	1	
R25		ERJ6GEYJ103	M.RESISTOR CH 1/10W 10K	1	
R26		ERJ6GEYJ102	M.RESISTOR CH 1/10W 1K	1	
R27		ERJ6GEYJ104	M.RESISTOR CH 1/10W 100K	1	
R28		ERJ6GEYJ102	M.RESISTOR CH 1/10W 1K	1	
R29		ERJ6GEYJ332	M.RESISTOR CH 1/10W 3.3K	1	
R30		ERJ6GEYJ104	M.RESISTOR CH 1/10W 100K	1	
R31		ERJ6GEYJ103	M.RESISTOR CH 1/10W 10K	1	
R32		ERJ6GEYJ102	M.RESISTOR CH 1/10W 1K	1	
R33		ERJ6GEYJ104	M.RESISTOR CH 1/10W 100K	1	
R34		ERJ6GEYJ102	M.RESISTOR CH 1/10W 1K	1	
R35		ERJ6GEYJ562	M.RESISTOR CH 1/10W 5.6K	1	
R36		ERJ6GEYJ104	M.RESISTOR CH 1/10W 100K	1	
R37		ERJ6GEYJ103	M.RESISTOR CH 1/10W 10K	1	
R38		ERJ6GEYJ102	M.RESISTOR CH 1/10W 1K	1	
R39		ERJ6GEYJ104	M.RESISTOR CH 1/10W 100K	1	
R40		ERJ6GEYJ102	M.RESISTOR CH 1/10W 1K	1	
R41		ERJ6GEYJ332	M.RESISTOR CH 1/10W 3.3K	1	
R42		ERJ6GEYJ104	M.RESISTOR CH 1/10W 100K	1	
R43		ERJ6GEYJ103	M.RESISTOR CH 1/10W 10K	1	
R44		ERJ6GEYJ102	M.RESISTOR CH 1/10W 1K	1	
R45		ERJ6GEYJ104	M.RESISTOR CH 1/10W 100K	1	
R46		ERJ6GEYJ102	M.RESISTOR CH 1/10W 1K	1	
R47		ERJ6GEYJ562	M.RESISTOR CH 1/10W 5.6K	1	
R48		ERJ6GEYJ104	M.RESISTOR CH 1/10W 100K	1	
R49		ERJ6GEYG223	M.RESISTOR CH 1/10W 22K	1	
R50,51		ERJ6GEYJ104	M.RESISTOR CH 1/10W 100K	2	
R52		ERJ6GEYG223	M.RESISTOR CH 1/10W 22K	1	
R53,54		ERJ6GEYJ103	M.RESISTOR CH 1/10W 10K	2	
R55		ERJ6GEYJ122	M.RESISTOR CH 1/10W 1.2K	1	
R56		ERJ6GEYJ102	M.RESISTOR CH 1/10W 1K	1	
R58		ERJ6GEYJ104	M.RESISTOR CH 1/10W 100K	1	
R59,60		ERJ6GEYG223	M.RESISTOR CH 1/10W 22K	2	
R61,62		ERJ6GEYJ183	M.RESISTOR CH 1/10W 18K	2	
VR1		VRV0109B502	V.RESISTOR 5K	1	
VR2		EVU013320A14	V.RESISTOR 10K	1	
VR3		VRV0109B502	V.RESISTOR 5K	1	
VR4		EVU013020A14	V.RESISTOR 10K	1	

Ref.No.		Part No.	Part Name & Description	Pcs	Remarks
VR5		VRV0109B502	V.RESISTOR 5K	1	
VR6		EVU013320A14	V.RESISTOR 10K	1	
VR7		VRV0109B502	V.RESISTOR 5K	1	
VR8		EVU013020A14	V.RESISTOR 10K	1	
VR9		VRV0109B502	V.RESISTOR 5K	1	
VR10		EVU013320A14	V.RESISTOR 10K	1	
VR11		VRV0109B502	V.RESISTOR 5K	1	
VR12		EVU013020A14	V.RESISTOR 10K	1	
VR13		VRV0109B502	V.RESISTOR 5K	1	
VR14		EVU013320A14	V.RESISTOR 10K	1	
VR15		VRV0109B502	V.RESISTOR 5K	1	
VR16		EVU013020A14	V.RESISTOR 10K	1	
VR17		VRV0109B103	V.RESISTOR 10K	1	
			MISCELLANEOUS		
		VMP0959	VOLUME HOLDER ANGLE	1	
		XYN3+C5S	SCREW	1	
	■	VEP84101C	P.C.BOARD W/COMPONENT		FOR AU-63H
			AUDIO VR		
			CAPACITORS		
C2		ECEA1CN100S	E.CAPACITOR 16V 10U	1	
C4		ECEA1CN100S	E.CAPACITOR 16V 10U	1	
C5-C8		ECEA1CU101	E.CAPACITOR 16V 100U	4	
CN160		VJP1234T	CONNECTOR(MALE) 7P	1	
CN162		VJP1235T	CONNECTOR(MALE) 8P	1	
CN163		VJP3082	CONNECTOR (MALE)	1	
IC1,C2		NJM4558D	IC	2	
IC3		AN78N09	IC	1	
IC4		AN79N09	IC	1	
			RESISTORS		
R7		ERDS2TJ103	C.RESISTOR 1/4W 10K	1	
R8		ERDS2TJ102	C.RESISTOR 1/4W 1K	1	
R9		ERDS2TJ104	C.RESISTOR 1/4W 100K	1	
R10,11		ERDS2TJ102	C.RESISTOR 1/4W 1K	2	
R12		ERDS2TJ104	C.RESISTOR 1/4W 100K	1	
R19		ERDS2TJ103	C.RESISTOR 1/4W 10K	1	
R20		ERDS2TJ102	C.RESISTOR 1/4W 1K	1	
R21		ERDS2TJ104	C.RESISTOR 1/4W 100K	1	
R22,23		ERDS2TJ102	C.RESISTOR 1/4W 1K	2	
R24		ERDS2TJ104	C.RESISTOR 1/4W 100K	1	
SW1		VSS0305	SWITCH	1	
VR3		VRV0109B502	V.RESISTOR 5K	1	
VR4		EVU013020A14	V.RESISTOR 10K	1	
VR7		VRV0109B502	V.RESISTOR 5K	1	
VR8		EVU013020A14	V.RESISTOR 10K	1	
VR11		ERDS2TJ273	C.RESISTOR 1/4W 27K	1	

Ref.No.		Part No.	Part Name & Description	Pcs	Remarks
			MISCELLANEOUS		
		VMP2605	P.C.B. HOLDER ANGLE	1	
	■	VEP84101B	P.C.BOARD W/COMPONENT		FOR AU-62H
			AUDIO VR		
			CAPACITORS		
C2		ECEA1CN100S	E.CAPACITOR 16V 10U	1	
C4		ECEA1CN100S	E.CAPACITOR 16V 10U	1	
C5-C8		ECEA1CU101	E.CAPACITOR 16V 100U	4	
CN160		VJP1234T	CONNECTOR(MALE) 7P	1	
CN162		VJP1235T	CONNECTOR(MALE) 8P	1	
CN163		VJP3082	CONNECTOR (MALE)	1	
IC1,C2		NJM4558D	IC	2	
IC3		AN78N09	IC	1	
IC4		AN79N09	IC	1	
			RESISTORS		
R7		ERDS2TJ103	C.RESISTOR 1/4W 10K	1	
R8		ERDS2TJ102	C.RESISTOR 1/4W 1K	1	
R9		ERDS2TJ104	C.RESISTOR 1/4W 100K	1	
R10,11		ERDS2TJ102	C.RESISTOR 1/4W 1K	2	
R12		ERDS2TJ104	C.RESISTOR 1/4W 100K	1	
R19		ERDS2TJ103	C.RESISTOR 1/4W 10K	1	
R20		ERDS2TJ102	C.RESISTOR 1/4W 1K	1	
R21		ERDS2TJ104	C.RESISTOR 1/4W 100K	1	
R22,23		ERDS2TJ102	C.RESISTOR 1/4W 1K	2	
R24		ERDS2TJ104	C.RESISTOR 1/4W 100K	1	
SW1		VSS0305	SWITCH	1	
VR3		VRV0109B502	V.RESISTOR 5K	1	
VR4		EVU013020A14	V.RESISTOR 10K	1	
VR7		VRV0109B502	V.RESISTOR 5K	1	
VR8		EVU013020A14	V.RESISTOR 10K	1	
VR11		EVUL7A020B54	V.RESISTOR 50K	1	
	■	VEP00E08C	P.C.BOARD W/COMPONENT		FOR AU-65H,AU-63H
			AUTO OFF LED		AU-62H

Ref.No.		Part No.	Part Name & Description	Pcs	Remarks
LED1		VLL0029	LED	1	
P113		VJP1141	CONNECTOR(MALE) 2P	1	
			RESISTORS		
R1		ERDS2TJ390	C.RESISTOR 1/4W 39	1	
	■	VEP00E72A	P.C.BOARD W/COMPONENT		FOR AU-65H,AU-63H
			CASSETTE CARRIIAGE LAMP		AU-62H
			MISCELINOUS		
		VLL0019	LAMP		
	■	VEP00E30A	P.C.BOARD W/COMPONENT		FOR AU-65H,AU-63H
			CASEETTE DETECT		AU-62H
			MISCLANIOUS		
		ON1110	PHOTO TRANSISTOR		
	■	VEP80422B	P.C.BOARD W/COMPONENT		FOR AU-65H,AU-63H
			EJECT INTERFACE		AU-62H
P112		VJP1188	CONNECTOR	1	
P115		VJP1188	CONNECTOR	1	
	■	VEP80232A	P.C.BOARD W/COMPONENT		FOR AU-65H,AU-63H
			EJECT SW		AU-62H
LED1		VLL0024	LED	1	
			RESISTORS		
R1		ERDS2TJ271	C.RESISTOR 1/4W 270	1	
SW1		VSP0221	SWITCH	1	

Ref.No.		Part No.	Part Name & Description	Pcs	Remarks
	■	VEP80631D	P.C.BOARD W/COMPONENT		FOR AU-65H
			FRONT INTERFACE		
			CAPACITORS		
C1-C9		ECKF1H103ZF	C.CAPACITOR 50V 0.01U	9	
C10-22		ECKF1H103ZF	C.CAPACITOR 50V 0.01U	13	
C23		ECQV1H104JZ	P.CAPACITOR 50V 0.1U	1	
C24		ECKF1H391KB	C.CAPACITOR 50V 390P	1	
C25		ECEA1CU101	E.CAPACITOR 16V 100U	1	
C26		ECKF1H103ZF	C.CAPACITOR 50V 0.01U	1	
C27		ECEA1CU101	E.CAPACITOR 16V 100U	1	
C28		ECKF1H103ZF	C.CAPACITOR 50V 0.01U	1	
C29		ECEA1CU330	E.CAPACITOR 16V 33U	1	
C30		ECKF1H103ZF	C.CAPACITOR 50V 0.01U	1	
C33-35		ECEA1CU101	E.CAPACITOR 16V 100U	3	
C101		ECQV1H274JZ	P.CAPACITOR 50V 0.27U	1	
C102		ECEA1CU100	E.CAPACITOR 16V 10U	1	
C103		ECEA1HU4R7	E.CAPACITOR 50V 4.7U	1	
C104		ECQV1H274JZ	P.CAPACITOR 50V 0.27U	1	
C105		ECEA1CU100	E.CAPACITOR 16V 10U	1	
C106		ECEA1HU4R7	E.CAPACITOR 50V 4.7U	1	
C107		ECQV1H274JZ	P.CAPACITOR 50V 0.27U	1	
C108		ECEA1CU100	E.CAPACITOR 16V 10U	1	
C109		ECEA1HU4R7	E.CAPACITOR 50V 4.7U	1	
C110		ECQV1H274JZ	P.CAPACITOR 50V 0.27U	1	
C111		ECEA1CU100	E.CAPACITOR 16V 10U	1	
C112		ECEA1HU4R7	E.CAPACITOR 50V 4.7U	1	
C115-18		ECEA1CU101	E.CAPACITOR 16V 100U	4	
CN130		VJP3082	CONNECTOR (MALE)	1	
CN131		VJP3080	CONNECTOR (MALE)	1	
CN132,33		VJP3078	CONNECTOR (MALE)	2	
CN134		VJP3082	CONNECTOR (MALE)	1	
CN135		VJP1233T	CONNECTOR(MALE) 6P	1	
CN136		VJP3083	CONNECTOR (MALE)	1	
CN137		VJP1232T	CONNECTOR(MALE) 5P	1	
CN138		VJP3078	CONNECTOR (MALE)	1	
CN139		VJP1234T	CONNECTOR(MALE) 7P	1	
D1-D3		MA165VT	DIODE	3	
D5,D6		MA165VT	DIODE	2	
D101-08		0A95	DIODE	8	
IC1-C3		MC14053BCP	IC	3	
IC4,C5		MC14021BCP	IC	2	
IC6		MC14050BCP	IC	1	
IC7		AN78L12	IC	1	
IC8		AN79L12	IC	1	
IC9		AN79L05	IC	1	
IC101,02		NJM4558D	IC	2	
IC104		AN78L09	IC	1	
IC105		AN79L09	IC	1	
P150		VJP2891A020	CONNECTOR(MALE)	1	

Ref.No.		Part No.	Part Name & Description	Pcs	Remarks
Q1		UN1212	TRANSISTOR-RESISTOR	1	
Q2		UN1213	TRANSISTOR-RESISTOR	1	
Q3,Q4		2SD636	TRANSISTOR	2	
Q101		2SD636	TRANSISTOR	1	
Q102		2SD1330	TRANSISTOR	1	
Q103		2SD636	TRANSISTOR	1	
Q104		2SD1330	TRANSISTOR	1	
Q105		2SD636	TRANSISTOR	1	
Q106		2SD1330	TRANSISTOR	1	
Q107		2SD636	TRANSISTOR	1	
Q108		2SD1330	TRANSISTOR	1	
			RESISTORS		
R7,R8		ERDS2TJ223	C.RESISTOR 1/4W 22K	2	
R9		ERDS2TJ103	C.RESISTOR 1/4W 10K	1	
R10-16		ERDS2TJ103	C.RESISTOR 1/4W 10K	7	
R25-32		ERDS2TJ103	C.RESISTOR 1/4W 10K	8	
R33,34		ERDS2TJ223	C.RESISTOR 1/4W 22K	2	
R35		ERDS2TJ102	C.RESISTOR 1/4W 1K	1	
R36		ERDS2TJ474	C.RESISTOR 1/4W 470K	1	
R37		ERDS2TJ103	C.RESISTOR 1/4W 10K	1	
R38,39		ERDS2TJ223	C.RESISTOR 1/4W 22K	2	
R40		ERDS2TJ474	C.RESISTOR 1/4W 470K	1	
R41		ERDS2TJ103	C.RESISTOR 1/4W 10K	1	
R42		ERDS2TJ223	C.RESISTOR 1/4W 22K	1	
R45-48		ERDS2TJ103	C.RESISTOR 1/4W 10K	4	
R49,50		ERDS2TJ151	C.RESISTOR 1/4W 150	2	
R51,52		ERDS2TJ103	C.RESISTOR 1/4W 10K	2	
R53		ERDS2TJ473	C.RESISTOR 1/4W 47K	1	
R54,55		ERDS2TJ103	C.RESISTOR 1/4W 10K	2	
R56		ERDS2TJ473	C.RESISTOR 1/4W 47K	1	
R72,73		ERDS2TJ223	C.RESISTOR 1/4W 22K	2	
R101		ERDS2TJ682	C.RESISTOR 1/4W 6.8K	1	
R102,03		ERDS2TJ223	C.RESISTOR 1/4W 22K	2	
R104		ERDS2TJ221	C.RESISTOR 1/4W 220	1	
R105		ERDS2TJ222	C.RESISTOR 1/4W 2.2K	1	
R106,07		ERDS2TJ103	C.RESISTOR 1/4W 10K	2	
R108		ERDS2TJ682	C.RESISTOR 1/4W 6.8K	1	
R109,10		ERDS2TJ223	C.RESISTOR 1/4W 22K	2	
R111		ERDS2TJ221	C.RESISTOR 1/4W 220	1	
R112		ERDS2TJ222	C.RESISTOR 1/4W 2.2K	1	
R113,14		ERDS2TJ103	C.RESISTOR 1/4W 10K	2	
R115		ERDS2TJ682	C.RESISTOR 1/4W 6.8K	1	
R116,17		ERDS2TJ223	C.RESISTOR 1/4W 22K	2	
R118		ERDS2TJ221	C.RESISTOR 1/4W 220	1	
R119		ERDS2TJ222	C.RESISTOR 1/4W 2.2K	1	
R120,21		ERDS2TJ103	C.RESISTOR 1/4W 10K	2	
R122		ERDS2TJ682	C.RESISTOR 1/4W 6.8K	1	
R123,24		ERDS2TJ223	C.RESISTOR 1/4W 22K	2	
R125		ERDS2TJ221	C.RESISTOR 1/4W 220	1	
R126		ERDS2TJ222	C.RESISTOR 1/4W 2.2K	1	
R127-29		ERDS2TJ103	C.RESISTOR 1/4W 10K	3	
R130		ERDS2TJ102	C.RESISTOR 1/4W 1K	1	
R131		ERDS2TJ104	C.RESISTOR 1/4W 100K	1	
R132		ERDS2TJ102	C.RESISTOR 1/4W 1K	1	
R133		ERDS2TJ562	C.RESISTOR 1/4W 5.6K	1	
R134		ERDS2TJ104	C.RESISTOR 1/4W 100K	1	
R135		ERDS2TJ103	C.RESISTOR 1/4W 10K	1	
R136		ERDS2TJ102	C.RESISTOR 1/4W 1K	1	
R137		ERDS2TJ104	C.RESISTOR 1/4W 100K	1	
R138		ERDS2TJ102	C.RESISTOR 1/4W 1K	1	
R139		ERDS2TJ562	C.RESISTOR 1/4W 5.6K	1	
R140		ERDS2TJ104	C.RESISTOR 1/4W 100K	1	
RA1,A2		EXBF9E103J	COMBI.R-R 10K	2	
SW3-W5		VSS0119	SWITCH	3	
SW6,W7		VSS0243	SWITCH	2	
SW8,W9		VSS0119	SWITCH	2	

Ref.No.		Part No.	Part Name & Description	Pcs	Remarks
SW10,11		VSS0119	SWITCH	2	
VR8		EVUF2AE20B53	V.RESISTOR 5K	1	
VR9		VRV0109B502	V.RESISTOR 5K	1	
VR101-04		VRV0110B203	V.RESISTOR 5K	4	
			MISCELLANEOUS		
		VGH0520	SLIDE SW SHEET	7	
		VGH1695	SWITCH COVER	2	
		VGU2089	SLIDE SW COVER	9	
		VMP2600	SWITCH ANGLE	1	
		XTV3+6F	SCREW	2	
	■	VEP80631B	P.C.BOARD W/COMPONENT		FOR AU-63H
			FRONT INTERFACE		
			CAPACITORS		
C1-C9		ECKF1H103ZF	C.CAPACITOR 50V 0.01U	9	
C10,11		ECKF1H103ZF	C.CAPACITOR 50V 0.01U	2	
C13		ECKF1H103ZF	C.CAPACITOR 50V 0.01U	1	
C17-22		ECKF1H103ZF	C.CAPACITOR 50V 0.01U	6	
C23		ECQV1H104JZ	P.CAPACITOR 50V 0.1U	1	
C24		ECKF1H391KB	C.CAPACITOR 50V 390P	1	
C25		ECEA1CU101	E.CAPACITOR 16V 100U	1	
C26		ECKF1H103ZF	C.CAPACITOR 50V 0.01U	1	
C27		ECEA1CU101	E.CAPACITOR 16V 100U	1	
C28		ECKF1H103ZF	C.CAPACITOR 50V 0.01U	1	
C29		ECEA1CU330	E.CAPACITOR 16V 33U	1	
C30		ECKF1H103ZF	C.CAPACITOR 50V 0.01U	1	
C33-35		ECEA1CU101	E.CAPACITOR 16V 100U	3	
C101		ECQV1H274JZ	P.CAPACITOR 50V 0.27U	1	
C102		ECEA1CU100	E.CAPACITOR 16V 10U	1	
C103		ECEA1HU4R7	E.CAPACITOR 50V 4.7U	1	
C104		ECQV1H274JZ	P.CAPACITOR 50V 0.27U	1	
C105		ECEA1CU100	E.CAPACITOR 16V 10U	1	
C106		ECEA1HU4R7	E.CAPACITOR 50V 4.7U	1	
C107		ECQV1H274JZ	P.CAPACITOR 50V 0.27U	1	
C108		ECEA1CU100	E.CAPACITOR 16V 10U	1	
C109		ECEA1HU4R7	E.CAPACITOR 50V 4.7U	1	
C110		ECQV1H274JZ	P.CAPACITOR 50V 0.27U	1	
C111		ECEA1CU100	E.CAPACITOR 16V 10U	1	
C112		ECEA1HU4R7	E.CAPACITOR 50V 4.7U	1	
C113,14		ECEA1CN100S	E.CAPACITOR 16V 10U	2	
C115-18		ECEA1CU101	E.CAPACITOR 16V 100U	4	
CN130		VJP3082	CONNECTOR (MALE)	1	
CN131		VJP3080	CONNECTOR (MALE)	1	
CN132,33		VJP3078	CONNECTOR (MALE)	2	
CN134		VJP3082	CONNECTOR (MALE)	1	
CN135		VJP1233T	CONNECTOR(MALE) 6P	1	
CN136		VJP3083	CONNECTOR (MALE)	1	
CN137		VJP1232T	CONNECTOR(MALE) 5P	1	
CN138		VJP3078	CONNECTOR (MALE)	1	
CN139		VJP1234T	CONNECTOR(MALE) 7P	1	
D5,D6		MA165VT	DIODE	2	
D101-08		0A95	DIODE	8	

Ref.No.		Part No.	Part Name & Description	Pcs	Remarks
IC1-C3		MC14053BCP	IC	3	
IC4,C5		MC14021BCP	IC	2	
IC6		MC14050BCP	IC	1	
IC7		AN78L12	IC	1	
IC8		AN79L12	IC	1	
IC9		AN79L05	IC	1	
IC101-03		NJM4558D	IC	3	
IC104		AN78L09	IC	1	
IC105		AN79L09	IC	1	
P150		VJP2891A020	CONNECTOR(MALE)	1	
Q1		UN1212	TRANSISTOR-RESISTOR	1	
Q101		2SD636	TRANSISTOR	1	
Q102		2SD1330	TRANSISTOR	1	
Q103		2SD636	TRANSISTOR	1	
Q104		2SD1330	TRANSISTOR	1	
Q105		2SD636	TRANSISTOR	1	
Q106		2SD1330	TRANSISTOR	1	
Q107		2SD636	TRANSISTOR	1	
Q108		2SD1330	TRANSISTOR	1	
			RESISTORS		
R7,R8		ERDS2TJ223	C.RESISTOR 1/4W 22K	2	
R9		ERDS2TJ103	C.RESISTOR 1/4W 10K	1	
R10-16		ERDS2TJ103	C.RESISTOR 1/4W 10K	7	
R25-32		ERDS2TJ103	C.RESISTOR 1/4W 10K	8	
R33,34		ERDS2TJ223	C.RESISTOR 1/4W 22K	2	
R35		ERDS2TJ102	C.RESISTOR 1/4W 1K	1	
R36		ERDS2TJ474	C.RESISTOR 1/4W 470K	1	
R37		ERDS2TJ103	C.RESISTOR 1/4W 10K	1	
R38,39		ERDS2TJ223	C.RESISTOR 1/4W 22K	2	
R40		ERDS2TJ474	C.RESISTOR 1/4W 470K	1	
R41		ERDS2TJ103	C.RESISTOR 1/4W 10K	1	
R42		ERDS2TJ223	C.RESISTOR 1/4W 22K	1	
R45-48		ERDS2TJ103	C.RESISTOR 1/4W 10K	4	
R72,73		ERDS2TJ223	C.RESISTOR 1/4W 22K	2	
R101		ERDS2TJ682	C.RESISTOR 1/4W 6.8K	1	
R102,03		ERDS2TJ223	C.RESISTOR 1/4W 22K	2	
R104		ERDS2TJ221	C.RESISTOR 1/4W 220	1	
R105		ERDS2TJ222	C.RESISTOR 1/4W 2.2K	1	
R106,07		ERDS2TJ103	C.RESISTOR 1/4W 10K	2	
R108		ERDS2TJ682	C.RESISTOR 1/4W 6.8K	1	
R109,10		ERDS2TJ223	C.RESISTOR 1/4W 22K	2	
R111		ERDS2TJ221	C.RESISTOR 1/4W 220	1	
R112		ERDS2TJ222	C.RESISTOR 1/4W 2.2K	1	
R113,14		ERDS2TJ103	C.RESISTOR 1/4W 10K	2	
R115		ERDS2TJ682	C.RESISTOR 1/4W 6.8K	1	
R116,17		ERDS2TJ223	C.RESISTOR 1/4W 22K	2	
R118		ERDS2TJ221	C.RESISTOR 1/4W 220	1	
R119		ERDS2TJ222	C.RESISTOR 1/4W 2.2K	1	
R120,21		ERDS2TJ103	C.RESISTOR 1/4W 10K	2	
R122		ERDS2TJ682	C.RESISTOR 1/4W 6.8K	1	
R123,24		ERDS2TJ223	C.RESISTOR 1/4W 22K	2	
R125		ERDS2TJ221	C.RESISTOR 1/4W 220	1	
R126		ERDS2TJ222	C.RESISTOR 1/4W 2.2K	1	
R127-29		ERDS2TJ103	C.RESISTOR 1/4W 10K	3	
R130		ERDS2TJ102	C.RESISTOR 1/4W 1K	1	
R131		ERDS2TJ104	C.RESISTOR 1/4W 100K	1	
R132		ERDS2TJ102	C.RESISTOR 1/4W 1K	1	
R133		ERDS2TJ562	C.RESISTOR 1/4W 5.6K	1	
R134		ERDS2TJ104	C.RESISTOR 1/4W 100K	1	
R135		ERDS2TJ103	C.RESISTOR 1/4W 10K	1	
R136		ERDS2TJ102	C.RESISTOR 1/4W 1K	1	
R137		ERDS2TJ104	C.RESISTOR 1/4W 100K	1	
R138		ERDS2TJ102	C.RESISTOR 1/4W 1K	1	

Ref.No.		Part No.	Part Name & Description	Pcs	Remarks
R139		ERDS2TJ562	C.RESISTOR 1/4W 5.6K	1	
R140		ERDS2TJ104	C.RESISTOR 1/4W 100K	1	
RA1,A2		EXBF9E103J	COMBI.R-R 10K	2	
SW1-W3		VSS0119	SWITCH	3	
SW5		VSS0119	SWITCH	1	
SW7		VSS0243	SWITCH	1	
SW10		VSS0119	SWITCH	1	
VR8		EVUF2AE20B53	V.RESISTOR 5K	1	
VR9		VRV0109B502	V.RESISTOR 5K	1	
VR10,11		EVUF2AE20A14	V.RESISTOR 10K	2	
VR12,13		VRV0109B502	V.RESISTOR 5K	2	
VR101-04		VRV0110B203	V.RESISTOR 5K	4	
			MISCELLANEOUS		
		VGH0520	SLIDE SW SHEET	5	
		VGH1695	SWITCH COVER	1	
		VGU2089	SLIDE SW COVER	6	
		VMP2600	SWITCH ANGLE	1	
		XTV3+6F	SCREW	2	
	■	VEP80631C	P.C.BOARD W/COMPONENT		FOR AU-62H
			FRONT INTERFACE		
			CAPACITORS		
C1-C9		ECKF1H103ZF	C.CAPACITOR 50V 0.01U	9	
C10,11		ECKF1H103ZF	C.CAPACITOR 50V 0.01U	2	
C13		ECKF1H103ZF	C.CAPACITOR 50V 0.01U	1	
C15		ECKF1H103ZF	C.CAPACITOR 50V 0.01U	1	
C17-22		ECKF1H103ZF	C.CAPACITOR 50V 0.01U	6	
C23		ECQV1H104JZ	P.CAPACITOR 50V 0.1U	1	
C24		ECKF1H391KB	C.CAPACITOR 50V 390P	1	
C25		ECEA1CU101	E.CAPACITOR 16V 100U	1	
C26		ECKF1H103ZF	C.CAPACITOR 50V 0.01U	1	
C27		ECEA1CU101	E.CAPACITOR 16V 100U	1	
C28		ECKF1H103ZF	C.CAPACITOR 50V 0.01U	1	
C29		ECEA1CU330	E.CAPACITOR 16V 33U	1	
C30		ECKF1H103ZF	C.CAPACITOR 50V 0.01U	1	
C33-35		ECEA1CU101	E.CAPACITOR 16V 100U	3	
C101		ECQV1H274JZ	P.CAPACITOR 50V 0.27U	1	
C102		ECEA1CU100	E.CAPACITOR 16V 10U	1	
C103		ECEA1HU4R7	E.CAPACITOR 50V 4.7U	1	
C104		ECQV1H274JZ	P.CAPACITOR 50V 0.27U	1	
C105		ECEA1CU100	E.CAPACITOR 16V 10U	1	
C106		ECEA1HU4R7	E.CAPACITOR 50V 4.7U	1	
C107		ECQV1H274JZ	P.CAPACITOR 50V 0.27U	1	
C108		ECEA1CU100	E.CAPACITOR 16V 10U	1	
C109		ECEA1HU4R7	E.CAPACITOR 50V 4.7U	1	
C110		ECQV1H274JZ	P.CAPACITOR 50V 0.27U	1	
C111		ECEA1CU100	E.CAPACITOR 16V 10U	1	
C112		ECEA1HU4R7	E.CAPACITOR 50V 4.7U	1	
C113,14		ECEA1CN100S	E.CAPACITOR 16V 10U	2	
C115-18		ECEA1CU101	E.CAPACITOR 16V 100U	4	

Ref.No.		Part No.	Part Name & Description	Pcs	Remarks
CN130		VJP3082	CONNECTOR (MALE)	1	
CN131		VJP3080	CONNECTOR (MALE)	1	
CN132,33		VJP3078	CONNECTOR (MALE)	2	
CN134		VJP3082	CONNECTOR (MALE)	1	
CN135		VJP1233T	CONNECTOR(MALE) 6P	1	
CN136		VJP3083	CONNECTOR (MALE)	1	
CN137		VJP1232T	CONNECTOR(MALE) 5P	1	
CN138		VJP3078	CONNECTOR (MALE)	1	
CN139		VJP1234T	CONNECTOR(MALE) 7P	1	
D6		MA165VT	DIODE	1	
D101-08		0A95	DIODE	8	
IC1-C3		MC14053BCP	IC	3	
IC4,C5		MC14021BCP	IC	2	
IC6		MC14050BCP	IC	1	
IC7		AN78L12	IC	1	
IC8		AN79L12	IC	1	
IC9		AN79L05	IC	1	
IC101-03		NJM4558D	IC	3	
IC104		AN78L09	IC	1	
IC105		AN79L09	IC	1	
P150		VJP2891A020	CONNECTOR(MALE)	1	
Q1		UN1212	TRANSISTOR-RESISTOR	1	
Q101		2SD636	TRANSISTOR	1	
Q102		2SD1330	TRANSISTOR	1	
Q103		2SD636	TRANSISTOR	1	
Q104		2SD1330	TRANSISTOR	1	
Q105		2SD636	TRANSISTOR	1	
Q106		2SD1330	TRANSISTOR	1	
Q107		2SD636	TRANSISTOR	1	
Q108		2SD1330	TRANSISTOR	1	
			RESISTORS		
R7,R8		ERDS2TJ223	C.RESISTOR 1/4W 22K	2	
R9		ERDS2TJ103	C.RESISTOR 1/4W 10K	1	
R10-16		ERDS2TJ103	C.RESISTOR 1/4W 10K	7	
R25-32		ERDS2TJ103	C.RESISTOR 1/4W 10K	8	
R33,34		ERDS2TJ223	C.RESISTOR 1/4W 22K	2	
R35		ERDS2TJ102	C.RESISTOR 1/4W 1K	1	
R36		ERDS2TJ474	C.RESISTOR 1/4W 470K	1	
R37		ERDS2TJ103	C.RESISTOR 1/4W 10K	1	
R38,39		ERDS2TJ223	C.RESISTOR 1/4W 22K	2	
R40		ERDS2TJ474	C.RESISTOR 1/4W 470K	1	
R41		ERDS2TJ103	C.RESISTOR 1/4W 10K	1	
R42		ERDS2TJ223	C.RESISTOR 1/4W 22K	1	
R45-48		ERDS2TJ103	C.RESISTOR 1/4W 10K	4	
R72,73		ERDS2TJ223	C.RESISTOR 1/4W 22K	2	
R101		ERDS2TJ682	C.RESISTOR 1/4W 6.8K	1	
R102,03		ERDS2TJ223	C.RESISTOR 1/4W 22K	2	
R104		ERDS2TJ221	C.RESISTOR 1/4W 220	1	
R105		ERDS2TJ222	C.RESISTOR 1/4W 2.2K	1	
R106,07		ERDS2TJ103	C.RESISTOR 1/4W 10K	2	
R108		ERDS2TJ682	C.RESISTOR 1/4W 6.8K	1	
R109,10		ERDS2TJ223	C.RESISTOR 1/4W 22K	2	
R111		ERDS2TJ221	C.RESISTOR 1/4W 220	1	
R112		ERDS2TJ222	C.RESISTOR 1/4W 2.2K	1	
R113,14		ERDS2TJ103	C.RESISTOR 1/4W 10K	2	
R115		ERDS2TJ682	C.RESISTOR 1/4W 6.8K	1	
R116,17		ERDS2TJ223	C.RESISTOR 1/4W 22K	2	
R118		ERDS2TJ221	C.RESISTOR 1/4W 220	1	
R119		ERDS2TJ222	C.RESISTOR 1/4W 2.2K	1	

Ref.No.		Part No.	Part Name & Description	Pcs	Remarks
R120,21		ERDS2TJ103	C.RESISTOR 1/4W 10K	2	
R122		ERDS2TJ682	C.RESISTOR 1/4W 6.8K	1	
R123,24		ERDS2TJ223	C.RESISTOR 1/4W 22K	2	
R125		ERDS2TJ221	C.RESISTOR 1/4W 220	1	
R126		ERDS2TJ222	C.RESISTOR 1/4W 2.2K	1	
R127-29		ERDS2TJ103	C.RESISTOR 1/4W 10K	3	
R130		ERDS2TJ102	C.RESISTOR 1/4W 1K	1	
R131		ERDS2TJ104	C.RESISTOR 1/4W 100K	1	
R132		ERDS2TJ102	C.RESISTOR 1/4W 1K	1	
R133		ERDS2TJ562	C.RESISTOR 1/4W 5.6K	1	
R134		ERDS2TJ104	C.RESISTOR 1/4W 100K	1	
R135		ERDS2TJ103	C.RESISTOR 1/4W 10K	1	
R136		ERDS2TJ102	C.RESISTOR 1/4W 1K	1	
R137		ERDS2TJ104	C.RESISTOR 1/4W 100K	1	
R138		ERDS2TJ102	C.RESISTOR 1/4W 1K	1	
R139		ERDS2TJ562	C.RESISTOR 1/4W 5.6K	1	
R140		ERDS2TJ104	C.RESISTOR 1/4W 100K	1	
RA1,A2		EXBF9E103J	COMBI.R-R 10K	2	
SW1-W3		VSS0119	SWITCH	3	
SW5		VSS0119	SWITCH	1	
SW7		VSS0243	SWITCH	1	
SW10		VSS0119	SWITCH	1	
VR8		EVUF2AE20B53	V.RESISTOR 5K	1	
VR9		VRV0109B502	V.RESISTOR 5K	1	
VR10,11		EVUF2AE20A14	V.RESISTOR 10K	2	
VR12,13		VRV0109B502	V.RESISTOR 5K	2	
VR101-04		VRV0110B203	V.RESISTOR 5K	4	
			MISCELLANEOUS		
		VGH0520	SLIDE SW SHEET	5	
		VGH1695	SWUTCH COVER	1	
		VGU2089	SLIDE SW COVER	6	
		VMP2600	SWITCH ANGLE	1	
		XTV3+6F	SCREW	2	
	■	VEP80440A	P.C.BOARD W/COMPONENT		FOR AU-65H,AU-63H
			FRONT LOADING		AU-62H
			MISCELLANEOUS		
		VJP1154	CONNECTOR (MALE)	1	
		VJP1246T	CONNECTOR (MALE)	1	
		VJP1249T	CONNECTOR (MALE)	1	
	■	VEP80559A	P.C.BOARD W/COMPONENT		FOR AU-65H
			FRONT MODE SELECT		
			CAPACITORS		
C1-C4		ECEA1CKG470	E.CAPACITOR 16V 47U	4	

Ref.No.		Part No.	Part Name & Description	Pcs	Remarks
CN180		VJP3078	CONNECTOR (MALE)	1	
CN181		VJP3079	CONNECTOR (MALE)	1	
D1,D2		VLL0047	DIODE	2	
D3,D4		VLL0032	LED	2	
IC1		UPC4557C	IC	1	
P153		VJP1144	CONNECTOR (MALE)	1	
P155		VJP1143	CONNECTOR(MALE)	1	
Q1,Q2		2SB641	TRANSISTOR	2	(Q,R)
Q3		2SD638-R	TRANSISTOR	1	(Q,R)
Q4		2SB643-Q	TRANSISTOR	1	<R>
			RESISTORS		
R1,R2		ERDS2TJ331	C.RESISTOR 1/4W 330	2	
R3		ERDS2TJ332	C.RESISTOR 1/4W 3.3K	1	
R4		ERDS2TJ153	C.RESISTOR 1/4W 15K	1	
R5		ERDS2TJ332	C.RESISTOR 1/4W 3.3K	1	
R6		ERDS2TJ153	C.RESISTOR 1/4W 15K	1	
R7,R8		ERDS2TJ560	C.RESISTOR 1/4W 56	2	
R9		ERDS2TJ562	C.RESISTOR 1/4W 5.6K	1	
R10,11		ERDS2TJ473	C.RESISTOR 1/4W 47K	2	
R12		ERDS2TJ562	C.RESISTOR 1/4W 5.6K	1	
R13,14		ERDS2TJ151	C.RESISTOR 1/4W 150	2	
SW1		VST0079	SWITCH	1	
SW2,W3		VST0080	SWITCH	2	
SW5,W6		VST0080	SWITCH	2	
			MISCELLANEOUS		
		VMX0473	SPACER	1	
		VMX1858	SPACER	2	
	■	VEP80559D	P.C.BOARD W/COMPONENT		FOR AU-63H
			FRONT MODE SELECT		
			CAPACITORS		
C1-C4		ECEA1CKG470	E.CAPACITOR 16V 47U	4	
CN180		VJP3078	CONNECTOR (MALE)	1	
CN181		VJP3079	CONNECTOR (MALE)	1	

Ref.No.		Part No.	Part Name & Description	Pcs	Remarks
D1,D2		VLL0047	DIODE	2	
IC1		UPC4557C	IC	1	
P153		VJP1144	CONNECTOR (MALE)	1	
P155		VJP1143	CONNECTOR(MALE)	1	
Q1,Q2		2SB641	TRANSISTOR	2	(Q,R)
Q3		2SD638-R	TRANSISTOR	1	(Q,R)
Q4		2SB643-Q	TRANSISTOR	1	<R>
			RESISTORS		
R1,R2		ERDS2TJ331	C.RESISTOR 1/4W 330	2	
R3		ERDS2TJ332	C.RESISTOR 1/4W 3.3K	1	
R4		ERDS2TJ153	C.RESISTOR 1/4W 15K	1	
R5		ERDS2TJ332	C.RESISTOR 1/4W 3.3K	1	
R6		ERDS2TJ153	C.RESISTOR 1/4W 15K	1	
R7,R8		ERDS2TJ560	C.RESISTOR 1/4W 56	2	
R9		ERDS2TJ562	C.RESISTOR 1/4W 5.6K	1	
R10,11		ERDS2TJ473	C.RESISTOR 1/4W 47K	2	
R12		ERDS2TJ562	C.RESISTOR 1/4W 5.6K	1	
R13,14		ERDS2TJ151	C.RESISTOR 1/4W 150	2	
SW1		VST0079	SWITCH	1	
SW2		VST0080	SWITCH	1	
SW5,W6		VST0080	SWITCH	2	
			MISCELLANEOUS		
		VMX1858	SPACER		
	■	VEP80559C	P.C.BOARD W/COMPONENT		FOR AU-62H
			FRONT MODE SELECT		
			CAPACITORS		
C1-C4		ECEA1CKG470	E.CAPACITOR 16V 47U	4	
CN180		VJP3078	CONNECTOR (MALE)	1	
CN181		VJP3079	CONNECTOR (MALE)	1	
D1,D2		VLL0047	DIODE	2	
IC1		UPC4557C	IC	1	
P153		VJP1144	CONNECTOR (MALE)	1	
P155		VJP1143	CONNECTOR(MALE)	1	

Ref.No.		Part No.	Part Name & Description	Pcs	Remarks
Q1,Q2		2SB641	TRANSISTOR	2	(Q,R)
Q3		2SD638-R	TRANSISTOR	1	(Q,R)
Q4		2SB643-Q	TRANSISTOR	1	<R>
			RESISTORS		
R1,R2		ERDS2TJ331	C.RESISTOR 1/4W 330	2	
R3		ERDS2TJ332	C.RESISTOR 1/4W 3.3K	1	
R4		ERDS2TJ153	C.RESISTOR 1/4W 15K	1	
R5		ERDS2TJ332	C.RESISTOR 1/4W 3.3K	1	
R6		ERDS2TJ153	C.RESISTOR 1/4W 15K	1	
R7,R8		ERDS2TJ560	C.RESISTOR 1/4W 56	2	
R9		ERDS2TJ562	C.RESISTOR 1/4W 5.6K	1	
R10,11		ERDS2TJ473	C.RESISTOR 1/4W 47K	2	
R12		ERDS2TJ562	C.RESISTOR 1/4W 5.6K	1	
R13,14		ERDS2TJ151	C.RESISTOR 1/4W 150	2	
SW1		VST0079	SWITCH	1	
SW2		VST0080	SWITCH	1	
SW6		VST0080	SWITCH	1	
			MISCELLANEOUS		
		VMX1858	COLOR SPACER		
	■	VEP86107B	P.C.BOARD W/COMPONENT		FOR AU-65H
			FRONT PANEL A		
			CAPACITORS		
C1-C8		ECUM1H103ZFN	C.CAPACITOR CH 50V 0.01U	8	
C9		ECEA1AU221	E.CAPACITOR 10V 220U	1	
C10-17		ECUM1E104ZFN	C.CAPACITOR CH 25V 0.1U	8	
D1,D2		MA151WA	DIODE	2	
D3		MA151K	DIODE	1	
D4-D6		MA151WA	DIODE	3	
D7		MA151WK	DIODE	1	
D8,D9		MA151WA	DIODE	2	
D10-12		MA151WA	DIODE	3	
D13		MA151K	DIODE	1	
D14,15		MA151WA	DIODE	2	
D16		MA151WK	DIODE	1	
D17-22		MA151WA	DIODE	6	
DP1		VSL0058	DISPLAY TUBE	1	
IC1		MC74HC138AF	IC	1	
IC2-C8		MC74HC374AF	IC	7	
IC9		MC74HC00AF	IC	1	
IC10-13		MC74HC138AF	IC	4	
IC18-21		MC74HC540F	IC	4	
IC22-25		TD62781AP	IC	4	

Ref.No.		Part No.	Part Name & Description	Pcs	Remarks
J2-J5		VJP3264030	CONNECTOR (MALE)	4	
LED1		LN217RP	LED	1	
LED2		EBG5504S	LED	1	
LED3		VLL0032	LED	1	
LED4-D9		LN317GPU	DIODE	6	
LED10-19		LN317GPU	DIODE	10	
LED20-23		PY3668S	LED	4	
LED24-28		EBG5504S	LED	5	
LED29-31		VLL0032	LED	3	
Q1,Q2		2SB710	TRANSISTOR	2	(Q,R)
Q3		UN2211	TRANSISTOR-RESISTOR	1	
Q4-Q9		2SD601-R	TRANSISTOR CHIP	6	(Q,R)
Q10-52		2SD601-R	TRANSISTOR CHIP	43	(Q,R)
			RESISTORS		
R1-R9		ERJ6GEYJ222	M.RESISTOR CH 1/10W 2.2K	9	
R10-49		ERJ6GEYJ222	M.RESISTOR CH 1/10W 2.2K	40	
R50-98		ERJ6GEYJ682	M.RESISTOR CH 1/10W 6.8K	49	
R99		ERJ6GEYJ331	M.RESISTOR CH 1/10W 330	1	
R100-44		ERJ6GEYJ331	M.RESISTOR CH 1/10W 330	45	
R145-69		ERJ6GEYJ391	M.RESISTOR CH 1/10W 390	25	
R170		ERJ6GEYJ103	M.RESISTOR CH 1/10W 10K	1	
R171		ERJ6GEYJ102	M.RESISTOR CH 1/10W 1K	1	
R172		ERJ6GEYJ103	M.RESISTOR CH 1/10W 10K	1	
R173		ERJ6GEYJ102	M.RESISTOR CH 1/10W 1K	1	
R174,75		ERJ6GEYJ331	M.RESISTOR CH 1/10W 330	2	
SW1		VSP0199	SWITCH	1	
SW2,W3		EVQQJ104K	SWITCH	2	
SW4		VSP0198	SWITCH	1	
SW5		VSP0193	SWITCH	1	
SW6		VSP0194	SWITCH	1	
SW7		VSP0195	SWITCH	1	
SW8		VSP0224	SWITCH	1	
SW9		VSP0279	SWITCH	1	
SW10		VSP0223	SWITCH	1	
SW11		VSP0199	SWITCH	1	
SW12,13		VSP0473	SWITCH	2	
SW14,15		VSP0198	SWITCH	2	
SW16		VSP0473	SWITCH	1	
SW17-19		VSP0199	SWITCH	3	
SW20-23		EVQQJ104K	SWITCH	4	
SW24,25		VSP0363	SWITCH	2	
SW26,27		EVQQJ104K	SWITCH	2	
SW28		VSP0199	SWITCH	1	
SW29		VSP0198	SWITCH	1	
SW30		VSP0204	SWITCH	1	
SW31,32		VSP0198	SWITCH	2	
SW33		VSP0239	SWITCH	1	
SW34		VSP0225	SWITCH	1	
SW35-37		EVQQ8B11K	SWITCH	3	
SW38-40		EVQQ8R13K	SWITCH	3	
SW41,42		VSS0172	SWITCH	2	
SW44		VSS0172	SWITCH	1	
			MISCELLANEOUS		
		VGF0191	LED HOLDER	1	
		VGQ0457	LED SPACER	4	
		VHN0061	NYLON NUT	6	
		VMX0473	SPACER	10	

Ref.No.		Part No.	Part Name & Description	Pcs	Remarks
		VMZ0829	LED COVER	1	
	■	VEP86086A	P.C.BOARD W/COMPONENT		FOR AU-63H,AU-62H
			FRONT PANEL A		
			CAPACITORS		
C1-C5		ECKF1H103ZF	C.CAPACITOR 50V 0.01U	5	
C8,C9		ECKF1H103ZF	C.CAPACITOR 50V 0.01U	2	
C10		ECKF1H103ZF	C.CAPACITOR 50V 0.01U	1	
C11		ECEA1AU221	E.CAPACITOR 10V 220U	1	
D5-D7		MA165VT	DIODE	3	
D9		MA165VT	DIODE	1	
D22		MA165VT	DIODE	1	
D24		MA165VT	DIODE	1	
D26-32		MA165VT	DIODE	7	
IC1		MC74HC138AN	IC	1	#IC
IC2-C5		MC74HC374AN	IC	4	#IC
IC8		MC74HC154N	IC	1	
IC9		MC74HC541N	IC	1	
IC10		MC74HC541N	IC	1	
IC11-13		AN6873N	IC	3	
IC15,16		M54514AP	IC	2	
IC18		M54514AP	IC	1	
J2		VJP1233T	CONNECTOR(MALE) 6P	1	
J3		VJP1235T	CONNECTOR(MALE) 8P	1	
J4,J5		VJP3080	CONNECTOR (MALE)	2	
LED1-D9		LN340GCPG	LED	9	
LED10-14		LN340GCPG	LED	5	
LED15,16		AYBG5305S	LED	2	
LED17		LN217RP	LED	1	
LED18		EBG5504S	LED	1	
LED19-34		LN317GPU	DIODE	16	
Q1-Q7		2SD636	TRANSISTOR	7	
Q8		2SB641	TRANSISTOR	1	
Q9		DTC114EA	TRANSISTOR RESISTOR	1	
Q10,11		2SB643	TRANSISTOR	2	
Q12		2SB641	TRANSISTOR	1	
			RESISTORS		
R1-R9		ERDS2TJ151	C.RESISTOR 1/4W 150	9	
R10		ERDS2TJ151	C.RESISTOR 1/4W 150	1	
R11,12		ERDS2TJ221	C.RESISTOR 1/4W 220	2	
R13-16		ERDS2TJ151	C.RESISTOR 1/4W 150	4	
R17		ERDS2TJ682	C.RESISTOR 1/4W 6.8K	1	
R18		ERDS2TJ222	C.RESISTOR 1/4W 2.2K	1	
R19		ERDS2TJ682	C.RESISTOR 1/4W 6.8K	1	
R20		ERDS2TJ222	C.RESISTOR 1/4W 2.2K	1	
R21		ERDS2TJ682	C.RESISTOR 1/4W 6.8K	1	

Ref.No.	Part No.	Part Name & Description	Pcs	Remarks
R22,23	ERDS2TJ222	C.RESISTOR 1/4W 2.2K	2	
R24	ERDS2TJ682	C.RESISTOR 1/4W 6.8K	1	
R25	ERDS2TJ222	C.RESISTOR 1/4W 2.2K	1	
R26,27	ERDS2TJ682	C.RESISTOR 1/4W 6.8K	2	
R28,29	ERDS2TJ222	C.RESISTOR 1/4W 2.2K	2	
R30	ERDS2TJ682	C.RESISTOR 1/4W 6.8K	1	
R31	ERDS2TJ222	C.RESISTOR 1/4W 2.2K	1	
R32	ERDS2TJ682	C.RESISTOR 1/4W 6.8K	1	
R34	ERDS2TJ391	C.RESISTOR 1/4W 390	1	
R35	ERDS2TJ151	C.RESISTOR 1/4W 150	1	
R36	ERDS2TJ391	C.RESISTOR 1/4W 390	1	
R39	ERDS2TJ102	C.RESISTOR 1/4W 1K	1	
R40	ERDS2TJ103	C.RESISTOR 1/4W 10K	1	
R41	ERDS2TJ102	C.RESISTOR 1/4W 1K	1	
R42	ERDS2TJ103	C.RESISTOR 1/4W 10K	1	
R43	ERDS2TJ682	C.RESISTOR 1/4W 6.8K	1	
R44	ERDS2TJ222	C.RESISTOR 1/4W 2.2K	1	
R45,46	ERDS2TJ151	C.RESISTOR 1/4W 150	2	
RA4,A5	EXBC44151J	COMBI.R-R 150	2	
RA6,A7	EXBC44391J	COMBI.R-R 390	2	
SW5	VSP0193	SWITCH	1	
SW6	VSP0195	SWITCH	1	
SW7	VSP0224	SWITCH	1	
SW9	VSP0223	SWITCH	1	
SW22	VSP0199	SWITCH	1	
SW24	VSP0198	SWITCH	1	
SW26	VSP0239	SWITCH	1	
SW27	VSP0225	SWITCH	1	
SW28,29	VSS0172	SWITCH	2	
SW30-32	EVQQ8R13K	SWITCH	3	
		MISCELLANEOUS		
	VGF0191	LED HOLDER	1	
	VGF0240	LED HOLDER	7	
	VHN0060	NYLON NUT	6	
	VJF0344	DISPLAY HOLDER	1	
	VJF0345	DISPLAY HOLDER	1	
	VMX0473	SPACER	1	
	VMX1606	SPACER	1	
	VMZ0829	LED COVER	1	

Ref.No.		Part No.	Part Name & Description	Pcs	Remarks
	■	VEP86108D	P.C.BOARD W/COMPONENT		FOR AU-65H
			FRONT PANEL B		
BZ1		VSQ0558	BUZZER	1	
			CAPACITORS		
C1,C2		ECUM1H330JCN	C.CAPACITOR CH 50V 33P	2	
C3-C5		ECUM1H103ZFN	C.CAPACITOR CH 50V 0.01U	3	
C6		ECUM1E104ZFN	C.CAPACITOR CH 25V 0.1U	1	
C7		ECEA1HU010	E.CAPACITOR 50V 1U	1	
C8,C9		ECUM1H103ZFN	C.CAPACITOR CH 50V 0.01U	2	
C10-12		ECUM1H103ZFN	C.CAPACITOR CH 50V 0.01U	3	
C14-16		ECUM1H103ZFN	C.CAPACITOR CH 50V 0.01U	3	
C18		ECEA1AU101	E.CAPACITOR 10V 100U	1	
C19		ECUM1H103ZFN	C.CAPACITOR CH 50V 0.01U	1	
C20		ECEA1AU101	E.CAPACITOR 10V 100U	1	
C21-25		ECUM1H103ZFN	C.CAPACITOR CH 50V 0.01U	5	
C26		ECUM1E104ZFN	C.CAPACITOR CH 25V 0.1U	1	
C27-29		ECUM1H103ZFN	C.CAPACITOR CH 50V 0.01U	3	
C30		ECUM1H101JCN	C.CAPACITOR CH 50V 100P	1	
C31,32		ECUM1H103ZFN	C.CAPACITOR CH 50V 0.01U	2	
C33		ECUM1H561JCN	C.CAPACITOR CH 50V 560P	1	
C34		ECUM1H103ZFN	C.CAPACITOR CH 50V 0.01U	1	
C35		ECEA1AU101	E.CAPACITOR 10V 100U	1	
C36,37		ECEA1AU102	E.CAPACITOR 10V 1000U	2	
C38		ECEA1HUR47	E.CAPACITOR 50V 0.47U	1	
C39		ECEA2AU101	E.CAPACITOR 100V 100U	1	
C40		ECQM1H103JF	P.CAPACITOR 50V 0.01U	1	
C41		ECUM1E104ZFN	C.CAPACITOR CH 25V 0.1U	1	
C42		ECEA1CU100	E.CAPACITOR 16V 10U	1	
C43,44		ECUM1H103ZFN	C.CAPACITOR CH 50V 0.01U	2	
C45		ECQM1H332JF	P.CAPACITOR 50V 3300P	1	
C46		ECUM1H103ZFN	C.CAPACITOR CH 50V 0.01U	1	
C58		ECUM1H102JCN	C.CAPACITOR CH 50V 1000P	1	
C59		ECUM1H103ZFN	C.CAPACITOR CH 50V 0.01U	1	
C60		ECUM1E104ZFN	C.CAPACITOR CH 25V 0.1U	1	
C61		ECUM1H103ZFN	C.CAPACITOR CH 50V 0.01U	1	
C62		ECQM1H682JF	P.CAPACITOR 50V 6800P	1	
C63		ECUM1H103ZFN	C.CAPACITOR CH 50V 0.01U	1	
C64-74		ECUM1E104ZFN	C.CAPACITOR CH 25V 0.1U	11	
C75		ECEA1AU221	E.CAPACITOR 10V 220U	1	
C76-86		ECUM1H103ZFN	C.CAPACITOR CH 50V 0.01U	11	
C88		ECUM1H103ZFN	C.CAPACITOR CH 50V 0.01U	1	
C100		ECQB1H103JF	P.CAPACITOR 50V 0.01U	1	
C101		ECQM1H103JF	P.CAPACITOR 50V 0.01U	1	
C102		ECEA1HFE100	E.CAPACITOR 50V 10U	1	
C103		ECQM1H103JF	P.CAPACITOR 50V 0.01U	1	
D1		MA151K	DIODE	1	
D2		MA151WK	DIODE	1	
D4		MA151K	DIODE	1	
D5		MA3082M	DIODE	1	
D6-D9		MA151K	DIODE	4	
D10		MA151K	DIODE	1	
D100		MA3200-L	DIODE	1	
D101		MA179	DIODE	1	
D102		MA185	DIODE	1	
D103		MA179	DIODE	1	
HS100		VSC3626		1	

Ref.No.		Part No.	Part Name & Description	Pcs	Remarks
IC1		MC74HC74AF	IC	1	
IC2		MC74HC161F	IC	1	
IC3		TL7705CPSB	IC	1	
IC4		TMP284C00AP6	IC	1	
IC5,C6		MC74HC541F	IC	2	
IC7		VSI1122	IC	1	
IC8		VSI0234	IC	1	
IC9		MC74HC139AF	IC	1	
IC10		MC74HC138AF	IC	1	
IC11		TMP284C43AF6	IC	1	
IC12		TMP284C30AF6	IC	1	
IC13		MC14015BF	IC	1	
IC14		MC14073BF	IC	1	
IC15		MC14049UBF	IC	1	
IC16		MC14013BF	IC	1	
IC17,18		MC14516BF	IC	2	
IC19		TMP82C55AF2	IC	1	
IC20		MC74HC273F	IC	1	
IC21		VSI0239	IC	1	
IC22		HD74HC93FP	IC	1	
IC23		MC74HC107F	IC	1	
IC24		HD74HC93FP	IC	1	
IC25		MC74HC107F	IC	1	
IC26		MC14001BF	IC	1	
IC27		TMP82C79F2	IC	1	
IC28		MC74HC244AF	IC	1	
IC29		MC74HC138AF	IC	1	
IC30		MC74HC32AF	IC	1	
IC31		SN74LS38NS	IC	1	
IC32		MC74HCU04F	IC	1	
IC33,34		MC74HC00AF	IC	2	
IC36,37		MC74HC04AF	IC	2	
IC38		MC74HC132AF	IC	1	
IC39		MC14538BF	IC	1	
IC40-49		MC74HC164F	IC	10	
IC50-58		TD62781AP	IC	9	
IC59		MC74HC74AF	IC	1	
ICS7		VJS2336A028	CONNECTOR (FEMALE)	1	
ICS21		VJS2336A028	CONNECTOR (FEMALE)	1	
J1		VJP1145	CONNECTOR (MALE)	1	
J2-J5		VJP3265030	CONNECTOR (MALE)	4	
L1,L2		VLP0017	COIL	2	
P150		VJP2891B020	CONNECTOR (MALE)	1	
Q1-Q3		UN2214	TRANSISTOR-RESISTOR	3	
Q4		2SA777	TRANSISTOR	1	
Q5		2SD1149-R	TRANSISTOR	1	<S>
Q6		UN2212	TRANSISTOR-RESISTOR	1	
Q7		2SD601-R	TRANSISTOR CHIP	1	(Q,R)
Q8,Q9		UN2214	TRANSISTOR-RESISTOR	2	
Q10		UN2214	TRANSISTOR-RESISTOR	1	
Q11		2SD946A	TRANSISTOR	1	
Q100		2SD1271A-P	TRANSISTOR	1	
Q101		2SC1318	TRANSISTOR	1	(R)
			RESISTORS		
R1		ERJ6GEYJ105	M.RESISTOR CH 1/10W 1M	1	
R2		ERJ6GEYJ102	M.RESISTOR CH 1/10W 1K	1	
R3		ERJ6GEYJ103	M.RESISTOR CH 1/10W 10K	1	
R4		ERJ6GEYJ124	M.RESISTOR CH 1/10W 120K	1	
R5		ERJ6GEYJ562	M.RESISTOR CH 1/10W 5.6K	1	

Ref.No.		Part No.	Part Name & Description	Pcs	Remarks
R7,R8		ERJ6GEYJ103	M.RESISTOR CH 1/10W 10K	2	
R9		ERJ6GEYJ153	M.RESISTOR CH 1/10W 15K	1	
R10-12		ERJ6GEYG223	M.RESISTOR CH 1/10W 22K	3	
R13		ERDS2TJ123	C.RESISTOR 1/4W 12K	1	
R14,15		ERJ6GEYJ333	M.RESISTOR CH 1/10W 33K	2	
R16-19		ERJ6GEYJ103	M.RESISTOR CH 1/10W 10K	4	
R20		ERJ6GEYJ473	M.RESISTOR CH 1/10W 47K	1	
R21		ERJ6GEYJ562	M.RESISTOR CH 1/10W 5.6K	1	
R22		ERJ6GEYJ105	M.RESISTOR CH 1/10W 1M	1	
R23		ERJ6GEYJ472	M.RESISTOR CH 1/10W 4.7K	1	
R24		ERJ6GEYJ333	M.RESISTOR CH 1/10W 33K	1	
R25		ERJ6GEYG223	M.RESISTOR CH 1/10W 22K	1	
R26		ERJ6GEYJ222	M.RESISTOR CH 1/10W 2.2K	1	
R27		ERJ6GEYJ102	M.RESISTOR CH 1/10W 1K	1	
R28		ERJ6GEYJ333	M.RESISTOR CH 1/10W 33K	1	
R29,30		ERJ6GEYJ104	M.RESISTOR CH 1/10W 100K	2	
R31		ERJ6GEYJ222	M.RESISTOR CH 1/10W 2.2K	1	
R32		ERJ6GEYG223	M.RESISTOR CH 1/10W 22K	1	
R33		ERJ6GEYJ472	M.RESISTOR CH 1/10W 4.7K	1	
R34-36		ERJ6GEYG223	M.RESISTOR CH 1/10W 22K	3	
R37		ERJ6GEYJ472	M.RESISTOR CH 1/10W 4.7K	1	
R38		ERJ6GEYG223	M.RESISTOR CH 1/10W 22K	1	
R39		ERJ6GEYJ102	M.RESISTOR CH 1/10W 1K	1	
R40-47		ERJ6GEYG223	M.RESISTOR CH 1/10W 22K	8	
R48-55		ERJ6GEYJ103	M.RESISTOR CH 1/10W 10K	8	
R56-71		ERJ6GEYG223	M.RESISTOR CH 1/10W 22K	16	
R72-76		ERJ6GEYJ103	M.RESISTOR CH 1/10W 10K	5	
R100		ERJ6GEYJ181	M.RESISTOR CH 1/10W 180	1	
R101		ERJ6GEYJ221	M.RESISTOR CH 1/10W 220	1	
R102		ERJ6GEYJ332	M.RESISTOR CH 1/10W 3.3K	1	
R103		ERDS2TJ103	C.RESISTOR 1/4W 10K	1	
R104		ERJ6GEYJ680	M.RESISTOR CH 1/10W 68	1	
R105		ERJ6GEYJ682	M.RESISTOR CH 1/10W 6.8K	1	
SW1		VSR0045	SWITCH	1	
SW2		VSS023702	SWITCH	1	
SW4		VSS023708	SWITCH	1	
T100		VLT0684	TRANSFORMER	1	
TF100		EYP2BN135	FUSE	1	
TP1		VJR0646	TEST POINT	1	
VR1		EVM38GA00B14	V.RESISTOR 10K	1	
VR2		EVM38GA00B54	V.RESISTOR 50K	1	
X1		VSX0150	CRYSTAL OSCILLATOR	1	
			MISCELLANEOUS		
		XMX2126	SPACER	4	
		XNG3CS	NUT	1	
		XWA3B	WASHER	1	
		XWG3	WASHER	1	
		XYNV3+K12S	SCREW	1	
	■	VEP86076F	P.C.BOARD W/COMPONENT		FOR AU-63H,AU-62H
			FRONT PANEL B		

Ref.No.		Part No.	Part Name & Description	Pcs	Remarks
BZ1		VSQ0558	BUZZER	1	
			CAPACITORS		
C1,C2		ECCF1H330JC	C.CAPACITOR 50V 33P	2	
C3-C5		ECKF1H103ZF	C.CAPACITOR 50V 0.01U	3	
C6		ECQV1H104JZ	P.CAPACITOR 50V 0.1U	1	
C7		ECEA1HKA010	E.CAPACITOR 50V 1U	1	
C8,C9		ECKF1H103ZF	C.CAPACITOR 50V 0.01U	2	
C10-13		ECKF1H103ZF	C.CAPACITOR 50V 0.01U	4	
C15-17		ECKF1H103ZF	C.CAPACITOR 50V 0.01U	3	
C18		ECQM1H103JV	P.CAPACITOR 50V 0.01U	1	
C19		ECEA1AKS101	E.CAPACITOR 10V 100U	1	
C20		ECKF1H103ZF	C.CAPACITOR 50V 0.01U	1	
C21		ECEA1AKS101	E.CAPACITOR 10V 100U	1	
C22-25		ECKF1H103ZF	C.CAPACITOR 50V 0.01U	4	
C26		ECEA1AKS101	E.CAPACITOR 10V 100U	1	
C27		ECEA1AKA221	E.CAPACITOR 10V 220U	1	
C28		ECQM1H102JV	P.CAPACITOR 50V 1000P	1	
C29		ECEA1HU470	E.CAPACITOR 50V 47U	1	
C30,31		ECKF1H103ZF	C.CAPACITOR 50V 0.01U	2	
C32		ECQM1H103JV	P.CAPACITOR 50V 0.01U	1	
C33		ECQM1H332JV	P.CAPACITOR 50V 3300P	1	
C34		ECQM1H103JV	P.CAPACITOR 50V 0.01U	1	
C35		ECQV1H104JZ	P.CAPACITOR 50V 0.1U	1	
C36		ECKF1H103ZF	C.CAPACITOR 50V 0.01U	1	
C37,38		ECQV1H104JZ	P.CAPACITOR 50V 0.1U	2	
C48-56		ECKF1H103ZF	C.CAPACITOR 50V 0.01U	9	
D1		MA185	DIODE	1	
D2		MA1220-M	DIODE	1	
D3		MA4075	DIODE	1	
D4-D9		MA165VT	DIODE	6	
D10-15		MA165VT	DIODE	6	
D16		1SS101	DIODE	1	
D17		MA165VT	DIODE	1	
D18		1SS101	DIODE	1	
IC1		MC74HC74AF	IC	1	
IC2		MC74HC161F	IC	1	
IC3		TL7705CPB	IC	1	
IC4		TMP284C00AP6	IC	1	
IC5,C6		MC74HC541N	IC	2	
IC7		VSI1123	IC	1	#IC
IC8		HM6264ALP12	IC	1	
IC9		MC74HC139AF	IC	1	
IC10		MC74HC138AF	IC	1	
IC11		TMP284C40AP6	IC	1	
IC12		TMP284C30AP6	IC	1	
IC13		TMP82C79F2	IC	1	
IC14		MC74HC138AF	IC	1	
IC15		TMP82C55AP2	IC	1	
IC16		MC14015BF	IC	1	
IC17		MC14013BF	IC	1	
IC18,19		MC14516BF	IC	2	
IC20		MC14049UBF	IC	1	
IC21		MC14073BF	IC	1	
IC22		SN74LS38NS	IC	1	
IC23		MC74HC132AF	IC	1	#IC
IC24		MC74HC00AF	IC	1	
IC25		MC74HC04AF	IC	1	
IC26		MC74HC32AN	IC	1	#IC

Ref.No.		Part No.	Part Name & Description	Pcs	Remarks
IC27		MC14001BCP	IC	1	
IC28		MC74HC00AN	IC	1	
IC7S		VJS2336A028	CONNECTOR (FEMALE)	1	
J1		VJP1145	CONNECTOR (MALE)	1	
J2		VJP1246T	CONNECTOR(MALE) 6P	1	
J3		VJP1248T	CONNECTOR(MALE) 8P	1	
J4,J5		VJP3092	CONNECTOR (MALE)	2	
L1,L2		VLP0017	COIL	2	
L3		VTD0035	COIL	1	
P150		VJP1976	CONNECTOR(MALE)	1	
Q1		2SD946A	TRANSISTOR	1	
Q2,Q3		2SB641	TRANSISTOR	2	
Q4		2SD1051	TRANSISTOR	1	
Q5-Q7		UN1214	TRANSISTOR-RESISTOR	3	
Q8		UN1212	TRANSISTOR-RESISTOR	1	
Q9		UN1214	TRANSISTOR-RESISTOR	1	
Q10		2SD636	TRANSISTOR	1	
			RESISTORS		
R1		ERDS2TJ105	C.RESISTOR 1/4W 1000K	1	
R2		ERDS2TJ103	C.RESISTOR 1/4W 10K	1	
R3		ERDS2TJ222	C.RESISTOR 1/4W 2.2K	1	
R4		ERDS2TJ472	C.RESISTOR 1/4W 4.7K	1	
R5		ERDS2TJ223	C.RESISTOR 1/4W 22K	1	
R6		ERDS2TJ562	C.RESISTOR 1/4W 5.6K	1	
R7		ERDS2TJ102	C.RESISTOR 1/4W 1K	1	
R8		ERDS2TJ103	C.RESISTOR 1/4W 10K	1	
R9		ERDS2TJ153	C.RESISTOR 1/4W 15K	1	
R10		ERDS2TJ103	C.RESISTOR 1/4W 10K	1	
R11		ERDS2TJ472	C.RESISTOR 1/4W 4.7K	1	
R12		ERDS2TJ103	C.RESISTOR 1/4W 10K	1	
R13		ERDS2TJ153	C.RESISTOR 1/4W 15K	1	
R14		ERDS2TJ222	C.RESISTOR 1/4W 2.2K	1	
R15		ERDS2TJ330	C.RESISTOR 1/4W 33	1	
R16		ERDS2TJ223	C.RESISTOR 1/4W 22K	1	
R17		ERDS2TJ472	C.RESISTOR 1/4W 4.7K	1	
R18		ERDS2TJ104	C.RESISTOR 1/4W 100K	1	
R19-21		ERDS2TJ103	C.RESISTOR 1/4W 10K	3	
R22		ERDS2TJ473	C.RESISTOR 1/4W 47K	1	
R23		ERDS2TJ562	C.RESISTOR 1/4W 5.6K	1	
R24		ERDS2TJ103	C.RESISTOR 1/4W 10K	1	
R25		ERDS2TJ105	C.RESISTOR 1/4W 1000K	1	
R26		ERDS2TJ472	C.RESISTOR 1/4W 4.7K	1	
R27		ERDS2TJ333	C.RESISTOR 1/4W 33K	1	
R28		ERDS2TJ223	C.RESISTOR 1/4W 22K	1	
R29		ERDS2TJ222	C.RESISTOR 1/4W 2.2K	1	
R30,31		ERDS2TJ102	C.RESISTOR 1/4W 1K	2	
RA1,A2		EXBR88223J	COMBI.R-R 22K	2	
SW1		VSR0045	SWITCH	1	
SW2		VSS023708	SWITCH	1	
TP3-P8		VJR0400Y	TEST POINT	6	
TPG1,G2		VJR0400B	TEST POINT	2	

Ref.No.		Part No.	Part Name & Description	Pcs	Remarks
VR1		VRV0109B103	V.RESISTOR 10K	1	
VR2		VRV0109B503	V.RESISTOR 50K	1	
X1		VSX0150	CRYSTAL OSCILLATOR	1	
	■	VEP80552A	P.C.BOARD W/COMPONENT		FOR AU-65H,AU-63H
			FRONT SW VR		AU-62H
			CAPACITORS		
C1		ECEA1CU101	E.CAPACITOR 16V 100U	1	
C2		ECKF1H103ZF	C.CAPACITOR 50V 0.01U	1	
C3		ECEA1CU101	E.CAPACITOR 16V 100U	1	
C4		ECKF1H103ZF	C.CAPACITOR 50V 0.01U	1	
CN190		VJP3095	CONNECTOR (MALE)	1	
L1,L2		VLQEL05S221K		2	
			RESISTORS		
R1-R9		ERDS2TJ103	C.RESISTOR 1/4W 10K	9	
R10-18		ERDS2TJ103	C.RESISTOR 1/4W 10K	9	
SW10		VSR0031	VOLTAGE SELECT SWITCH	1	
SW11		ESD32184	SWITCH	1	
VR1,R2		EVUF3AS01B53	V.RESISTOR 5K	2	
VR3-R8		EVUF3AE20B53	V.RESISTOR 5K	6	
VR9		EVUF3AS01B53	V.RESISTOR 5K	1	
	■	VEP80616A	P.C.BOARD W/COMPONENT		FOR AU-65H,AU-63H
			HEADPHONE VR		AU-62H
			CAPACITORS		
C1,C2		ECUM1H102KBN	C.CAPACITOR CH 50V 1000P	2	
L1-L3		VLQ0163K121	COIL	3	

Ref.No.		Part No.	Part Name & Description	Pcs	Remarks
P109		VJP1143	CONNECTOR(MALE)	1	
			MISCELLANEOUS		
		VJJ0150	HEADPHONE JACK	1	
	■	VEP00E04B	P.C.BOARD W/COMPONENT		FOR AU-65H,AU-63H
			LOADING PHOTO		AU-62H
			MISCELLANEOUS		
		ON1110	PHOTO TRANSISTOR	1	
	■	VEP80550B	P.C.BOARD W/COMPONENT		FOR AU-65H,AU-63H
			MECHA INTERFACE CIRCUIT		AU-62H
			CAPACITORS		
C1-C8		ECUM1H103ZFN	C.CAPACITOR CH 50V 0.01U	8	
C18-29		ECUM1H103ZFN	C.CAPACITOR CH 50V 0.01U	12	
C30		ECUM1H331JCN	C.CAPACITOR CH 50V 330P	1	
C31		ECUM1H103ZFN	C.CAPACITOR CH 50V 0.01U	1	
C32		ECEA0JKG101	E.CAPACITOR 6.3V 100U	1	
C33		ECUM1H103ZFN	C.CAPACITOR CH 50V 0.01U	1	
C34		ECQM1H222JF	P.CAPACITOR 50V 2200P	1	
C35		ECEA1HKG0R1	E.CAPACITOR 50V 0.1U	1	
C36,37		ECEA1CKG100	E.CAPACITOR 16V 10U	2	
C200		ECUM1H103ZFN	C.CAPACITOR CH 50V 0.01U	1	
C201,02		ECEA1CKG100	E.CAPACITOR 16V 10U	2	
CN110		VJP1243T	CONNECTOR(MALE) 3P	1	
CN111		VJP1243R	CONNECTOR(MALE) 3P	1	
CN112		VJP1243G	CONNECTOR(MALE) 3P	1	
CN113		VJP3091	CONNECTOR (MALE)	1	
CN114		VJP1244T	CONNECTOR(MALE) 4P	1	
CN117-19		VJP3091	CONNECTOR (MALE)	3	
CN120		VJP1244T	CONNECTOR(MALE) 4P	1	
CN121		VJP1248T	CONNECTOR(MALE) 8P	1	
CN122,23		VJS1413	CONNECTOR(FEMALE)	2	
D10		MA151WK	DIODE	1	
D11,12		MA151K	DIODE	2	
D200-03		MA153	DIODE	4	
IC1,C2		MC14021BF	IC	2	
IC4		MC14584BF	IC	1	
IC5		MC14050BF	IC	1	
IC7		MC14013BF	IC	1	
IC8		NJM2901M	IC	1	

Ref.No.		Part No.	Part Name & Description	Pcs	Remarks
L1		VLQEL05S102K	COIL 1000UH	1	
P405		VJP1149	CONNECTOR(MALE)	1	
P431,32		VJP1149	CONNECTOR(MALE)	2	
P61002,03		VJP1243T	CONNECTOR(MALE) 3P	2	
P61006,07		VJP1243T	CONNECTOR(MALE) 3P	2	
P61008		VJP1246T	CONNECTOR(MALE) 6P	1	
P61017		VJP1932T	CONNECTOR (MALE)	1	
P61020		VJP1932T	CONNECTOR (MALE)	1	
P61021		VJP3091	CONNECTOR (MALE)	1	
P61022		VJP1244T	CONNECTOR(MALE) 4P	1	
P61025		VJP1245T	CONNECTOR(MALE) 5P	1	
P61027		VJP1243T	CONNECTOR(MALE) 3P	1	
P61032		VJP1242T	CONNECTOR(MALE) 2P	1	
P61033		VJP1243T	CONNECTOR(MALE) 3P	1	
Q15		2SB710	TRANSISTOR	1	(Q,R)
Q16,17		2SD601-R	TRANSISTOR CHIP	2	(Q,R)
Q200		2SD602	TRANSISTOR	1	(Q,R)
			RESISTORS		
R3		ERJ6GEYJ103	M.RESISTOR CH 1/10W 10K	1	
R40,41		ERJ6GEYJ123	M.RESISTOR CH 1/10W 12K	2	
R42		ERJ6GEYJ274	M.RESISTOR CH 1/10W 270K	1	
R43		ERJ6GEYG223	M.RESISTOR CH 1/10W 22K	1	
R44		ERJ6GEYJ104	M.RESISTOR CH 1/10W 100K	1	
R46,47		ERJ6GEYG563	M.RESISTOR CH 1/10W 56K	2	
R48		ERJ6GEYJ474	M.RESISTOR CH 1/10W 470K	1	
R49		ERJ6GEYJ103	M.RESISTOR CH 1/10W 10K	1	
R50		ERJ6GEYJ274	M.RESISTOR CH 1/10W 270K	1	
R51		ERJ6GEYJ333	M.RESISTOR CH 1/10W 33K	1	
R52		ERJ6GEYJ123	M.RESISTOR CH 1/10W 12K	1	
R53		ERJ6GEYJ103	M.RESISTOR CH 1/10W 10K	1	
R54		ERJ6GEYJ123	M.RESISTOR CH 1/10W 12K	1	
R55		ERJ6GEYJ103	M.RESISTOR CH 1/10W 10K	1	
R56		ERJ6GEYJ123	M.RESISTOR CH 1/10W 12K	1	
R57		ERJ6GEYJ103	M.RESISTOR CH 1/10W 10K	1	
R58		ERJ6GEYJ123	M.RESISTOR CH 1/10W 12K	1	
R59,60		ERJ6GEYJ333	M.RESISTOR CH 1/10W 33K	2	
R61,62		ERJ6GEYJ103	M.RESISTOR CH 1/10W 10K	2	
R63		ERJ6GEYJ123	M.RESISTOR CH 1/10W 12K	1	
R64		ERJ6GEYJ103	M.RESISTOR CH 1/10W 10K	1	
R65		ERJ6GEYJ123	M.RESISTOR CH 1/10W 12K	1	
R66		ERJ6GEYJ103	M.RESISTOR CH 1/10W 10K	1	
R67		ERJ6GEYJ123	M.RESISTOR CH 1/10W 12K	1	
R68		ERJ6GEYJ103	M.RESISTOR CH 1/10W 10K	1	
R69		ERJ6GEYJ102	M.RESISTOR CH 1/10W 1K	1	
R70		ERJ6GEYJ474	M.RESISTOR CH 1/10W 470K	1	
R71		ERJ6GEYJ103	M.RESISTOR CH 1/10W 10K	1	
R72		ERJ6GEYG223	M.RESISTOR CH 1/10W 22K	1	
R75		ERJ6GEYJ824	M.RESISTOR CH 1/10W 820K	1	
R76,77		ERJ6GEYJ102	M.RESISTOR CH 1/10W 1K	2	
R78,79		ERJ6GEYJ824	M.RESISTOR CH 1/10W 820K	2	
R80,81		ERJ6GEYJ102	M.RESISTOR CH 1/10W 1K	2	
R82		ERJ6GEYJ824	M.RESISTOR CH 1/10W 820K	1	
R83,84		ERJ6GEYJ222	M.RESISTOR CH 1/10W 2.2K	2	
R85,86		ERJ6GEYJ104	M.RESISTOR CH 1/10W 100K	2	
R87		ERJ6GEYG563	M.RESISTOR CH 1/10W 56K	1	
R88		ERJ6GEYJ105	M.RESISTOR CH 1/10W 1M	1	
R89		ERJ6GEYJ104	M.RESISTOR CH 1/10W 100K	1	
R90		ERJ6GEYG563	M.RESISTOR CH 1/10W 56K	1	
R91		ERJ6GEYJ105	M.RESISTOR CH 1/10W 1M	1	
R92		ERJ6GEYJ103	M.RESISTOR CH 1/10W 10K	1	
R93		ERG12SJ220	M.RESISTOR 1/2W 22	1	
R94		ERJ6GEYJ222	M.RESISTOR CH 1/10W 2.2K	1	
R95		ERJ6GEYJ474	M.RESISTOR CH 1/10W 470K	1	
R96		ERJ6GEYJ104	M.RESISTOR CH 1/10W 100K	1	
R97		ERJ6GEYJ332	M.RESISTOR CH 1/10W 3.3K	1	
R98,99		ERJ6GEYJ181	M.RESISTOR CH 1/10W 180	2	

Ref.No.		Part No.	Part Name & Description	Pcs	Remarks
R100,01		ERJ6GEYJ181	M.RESISTOR CH 1/10W 180	2	
R200		ERJ6GEYJ123	M.RESISTOR CH 1/10W 12K	1	
R201		ERJ6GEYJ103	M.RESISTOR CH 1/10W 10K	1	
R202		ERJ6GEYJ101	M.RESISTOR CH 1/10W 100	1	
R203		ERJ6GEYJ272	M.RESISTOR CH 1/10W 2.7K	1	
R204		ERJ6GEYJ822	M.RESISTOR CH 1/10W 8.2K	1	
R205-08		ERJ6GEYJ102	M.RESISTOR CH 1/10W 1K	4	
R209		ERJ6GEYG563	M.RESISTOR CH 1/10W 56K	1	
R210		ERJ6GEYJ123	M.RESISTOR CH 1/10W 12K	1	
R211		ERJ6GEYJ101	M.RESISTOR CH 1/10W 100	1	
			MISCELLANEOUS		
		VHN0011	LATCH	5	
		VJF0304	CLAMPER	8	
		VMZ1716	BARRIER	1	
	■	VEP80083B	P.C.BOARD W/COMPONENT		FOR AU-65H
			METER CHANGE SW		
SW1		VSS0183	SWITCH	1	
	■	VEP80333C	P.C.BOARD W/COMPONENT		FOR AU-65H
			METER LAMP		
LED1-D9		VLL0048	LED	9	
LED10-16		VLL0048	LED	7	
P100		VJP1149	CONNECTOR(MALE)	1	
			RESISTORS		
R1-R4		ERDS1TJ152	C.RESISTOR 1/2W 1.5K	4	
			MISCELLANEOUS		
		KL-02	LED SPACER	12	
	■	VEP80333B	P.C.BOARD W/COMPONENT		FOR AU-63H,AU-62H
			METER LAMP		

Ref.No.		Part No.	Part Name & Description	Pcs	Remarks
LED1-D4		VLL0048	LED	4	
LED9		VLL0048	LED	1	
LED10-16		VLL0048	LED	7	
P100		VJP1149	CONNECTOR(MALE)	1	
			RESISTORS		
R1		ERDS1TJ152	C.RESISTOR 1/2W 1.5K	1	
R3,R4		ERDS1TJ152	C.RESISTOR 1/2W 1.5K	2	
			MISCELLANEOUS		
		KL-02	LED SPACER	12	
	■	VEP83170B	P.C.BOARD W/COMPONENT		FOR AU-65H
			PICTURE IN PICTURE		
			CAPACITORS		
C1		ECUM1H223KBN	C.CAPACITOR CH 50V 0.022U	1	
C2		ECEA1CU101	E.CAPACITOR 16V 100U	1	
C6,C7		ECEA1HU4R7	E.CAPACITOR 50V 4.7U	2	
C9		ECEA1HU4R7	E.CAPACITOR 50V 4.7U	1	
C10		ECEA1CU100	E.CAPACITOR 16V 10U	1	
C11		ECEA1CU101	E.CAPACITOR 16V 100U	1	
C13		ECEA1HU2R2	E.CAPACITOR 50V 2.2U	1	
C100		ECEA1CU101	E.CAPACITOR 16V 100U	1	
C101		ECUM1H223KBN	C.CAPACITOR CH 50V 0.022U	1	
C105		ECEA1CU330	E.CAPACITOR 16V 33U	1	
C106		ECUM1H100DCN	C.CAPACITOR CH 50V 10P	1	
C107		ECEA1HU2R2	E.CAPACITOR 50V 2.2U	1	
C108		ECHU1C333JA5	P.CAPACITOR 16V 0.033U	1	
C109		ECEA1HUR22	E.CAPACITOR 50V 0.22U	1	
C110		ECUM1H103KBN	C.CAPACITOR CH 50V 0.01U	1	
C111		ECEA1HU4R7	E.CAPACITOR 50V 4.7U	1	
C112-14		ECEA1HU010	E.CAPACITOR 50V 1U	3	
C115		ECUM1H103KBN	C.CAPACITOR CH 50V 0.01U	1	
C116		ECHU1C102JA5	P.CAPACITOR 16V 1000P	1	
C118		ECHU1C682JA5	P.CAPACITOR 16V 6800P	1	
C119		ECEA1CU470	E.CAPACITOR 16V 47U	1	
C120		ECUM1H150JCN	C.CAPACITOR CH 50V 15P	1	
C121		ECUM1H223KBN	C.CAPACITOR CH 50V 0.022U	1	
C122		ECEA1HU010	E.CAPACITOR 50V 1U	1	
C123		ECUM1E104ZFN	C.CAPACITOR CH 25V 0.1U	1	
C124		ECUM1H103KBN	C.CAPACITOR CH 50V 0.01U	1	
C126,27		ECUM1E104ZFN	C.CAPACITOR CH 25V 0.1U	2	
C131		ECUM1H271JCN	C.CAPACITOR CH 50V 270P	1	
C132		ECHU1C152JA5	P.CAPACITOR 16V 1500P	1	
C202		ECEA1CU470	E.CAPACITOR 16V 47U	1	
C203		ECHU1C682JA5	P.CAPACITOR 16V 6800P	1	
C204		ECUM1H150JCN	C.CAPACITOR CH 50V 15P	1	
C205		ECUM1H100DCN	C.CAPACITOR CH 50V 10P	1	
C206		ECEA1HU2R2	E.CAPACITOR 50V 2.2U	1	
C207		ECUM1H100DCN	C.CAPACITOR CH 50V 10P	1	
C208		ECUM1H103KBN	C.CAPACITOR CH 50V 0.01U	1	
C209		ECHU1C333JA5	P.CAPACITOR 16V 0.033U	1	
C210		ECEA1HUR22	E.CAPACITOR 50V 0.22U	1	
C211		ECEA1HU4R7	E.CAPACITOR 50V 4.7U	1	
C212		ECUM1H103KBN	C.CAPACITOR CH 50V 0.01U	1	
C214		ECHU1C102JA5	P.CAPACITOR 16V 1000P	1	

Ref.No.	Part No.	Part Name & Description	Pcs	Remarks
C215	ECEA1HU010	E.CAPACITOR 50V 1U	1	
C216	ECHU1C102JA5	P.CAPACITOR 16V 1000P	1	
C217	ECUM1H103KBN	C.CAPACITOR CH 50V 0.01U	1	
C218	ECHU1C152JA5	P.CAPACITOR 16V 1500P	1	
C219	ECUM1H223KBN	C.CAPACITOR CH 50V 0.022U	1	
C220	ECEA1HU010	E.CAPACITOR 50V 1U	1	
C230	ECUM1H271JCN	C.CAPACITOR CH 50V 270P	1	
C280	ECUM1H680JCN	C.CAPACITOR CH 50V 68P	1	
C301,02	ECEA1CU470	E.CAPACITOR 16V 47U	2	
C303	ECUM1H220JCN	C.CAPACITOR CH 50V 22P	1	
C304	ECEA1CU101	E.CAPACITOR 16V 100U	1	
C305	ECUM1H223KBN	C.CAPACITOR CH 50V 0.022U	1	
C306	ECEA1CU101	E.CAPACITOR 16V 100U	1	
C307,08	ECUM1H223KBN	C.CAPACITOR CH 50V 0.022U	2	
C310	ECUM1E104ZFN	C.CAPACITOR CH 25V 0.1U	1	
C311	ECUM1H151JCN	C.CAPACITOR CH 50V 150P	1	
C314,15	ECUM1H681JCN	C.CAPACITOR CH 50V 680P	2	
C321	ECUM1H121JCN	C.CAPACITOR CH 50V 120P	1	
C340	ECHU1C102JA5	P.CAPACITOR 16V 1000P	1	
C341,42	ECUM1E104ZFN	C.CAPACITOR CH 25V 0.1U	2	
C343	ECEA1CU101	E.CAPACITOR 16V 100U	1	
C344,45	ECUM1E104ZFN	C.CAPACITOR CH 25V 0.1U	2	
C346	ECEA1CU101	E.CAPACITOR 16V 100U	1	
C347,48	ECUM1E104ZFN	C.CAPACITOR CH 25V 0.1U	2	
C349	ECEA1CU101	E.CAPACITOR 16V 100U	1	
C350,51	ECUM1H331JCN	C.CAPACITOR CH 50V 330P	2	
C352	ECEA1HU010	E.CAPACITOR 50V 1U	1	
C403,04	ECUM1H470JCN	C.CAPACITOR CH 50V 47P	2	
C405,06	ECUM1H103KBN	C.CAPACITOR CH 50V 0.01U	2	
C451,52	ECEA1CU470	E.CAPACITOR 16V 47U	2	
C501	ECUM1H103KBN	C.CAPACITOR CH 50V 0.01U	1	
C503	ECUM1H101JCN	C.CAPACITOR CH 50V 100P	1	
C506	ECUM1H330JCN	C.CAPACITOR CH 50V 33P	1	
C508-10	ECUM1H103KBN	C.CAPACITOR CH 50V 0.01U	3	
C511	ECUM1H221JCN	C.CAPACITOR CH 50V 220P	1	
C512,13	ECUM1H470JCN	C.CAPACITOR CH 50V 47P	2	
C551,52	ECEA1CU470	E.CAPACITOR 16V 47U	2	
C601	ECUM1C104KBN	C.CAPACITOR CH 16V 0.1U	1	
C602,03	ECUM1H220JCN	C.CAPACITOR CH 50V 22P	2	
C604,05	ECUM1H103KBN	C.CAPACITOR CH 50V 0.01U	2	
C611	ECUM1C104KBN	C.CAPACITOR CH 16V 0.1U	1	
C612,13	ECUM1H220JCN	C.CAPACITOR CH 50V 22P	2	
C614	ECUM1H180JCN	C.CAPACITOR CH 50V 18P	1	
C700	ECUM1H223KBN	C.CAPACITOR CH 50V 0.022U	1	
C701-05	ECEA1CU100	E.CAPACITOR 16V 10U	5	
C706	ECUM1H223KBN	C.CAPACITOR CH 50V 0.022U	1	
C707	ECEA1CU100	E.CAPACITOR 16V 10U	1	
C708,09	ECUM1E104KBN	C.CAPACITOR CH 25V 0.1U	2	
C710	ECEA1CU100	E.CAPACITOR 16V 10U	1	
C711	ECUM1H223KBN	C.CAPACITOR CH 50V 0.022U	1	
C712-15	ECUM1E104KBN	C.CAPACITOR CH 25V 0.1U	4	
C716	ECUM1H223KBN	C.CAPACITOR CH 50V 0.022U	1	
C718	ECUM1E104KBN	C.CAPACITOR CH 25V 0.1U	1	
C719	ECUM1H223KBN	C.CAPACITOR CH 50V 0.022U	1	
C720	ECEA1CU100	E.CAPACITOR 16V 10U	1	
C722	ECUM1H223KBN	C.CAPACITOR CH 50V 0.022U	1	
C725	ECUM1H103KBN	C.CAPACITOR CH 50V 0.01U	1	
C726	ECUM1E104KBN	C.CAPACITOR CH 25V 0.1U	1	
C790	ECUM1H560JCN	C.CAPACITOR CH 50V 56P	1	
C801	ECEA1HU010	E.CAPACITOR 50V 1U	1	
C802	ECUM1E473KBN	C.CAPACITOR CH 25V 0.047U	1	
C803	ECEA1CU100	E.CAPACITOR 16V 10U	1	
C804	ECUM1E104ZFN	C.CAPACITOR CH 25V 0.1U	1	
C805,06	ECUM1C104KBN	C.CAPACITOR CH 16V 0.1U	2	
C807	ECUM1E104ZFN	C.CAPACITOR CH 25V 0.1U	1	
C808	ECUM1H270JCN	C.CAPACITOR CH 50V 27P	1	
C809	ECEA1HU010	E.CAPACITOR 50V 1U	1	
C810	ECUM1E473KBN	C.CAPACITOR CH 25V 0.047U	1	
C811	ECEA1CU100	E.CAPACITOR 16V 10U	1	
C812	ECUM1E104ZFN	C.CAPACITOR CH 25V 0.1U	1	
C813	ECUM1C104KBN	C.CAPACITOR CH 16V 0.1U	1	
C814	ECUM1E104ZFN	C.CAPACITOR CH 25V 0.1U	1	
C815	ECEA1CU470	E.CAPACITOR 16V 47U	1	
C816	ECUM1E104ZFN	C.CAPACITOR CH 25V 0.1U	1	
C817	ECEA1CU470	E.CAPACITOR 16V 47U	1	

Ref.No.	Part No.	Part Name & Description	Pcs	Remarks
C818	ECEA1HU010	E.CAPACITOR 50V 1U	1	
C819	ECUM1E473KBN	C.CAPACITOR CH 25V 0.047U	1	
C820	ECUM1C104KBN	C.CAPACITOR CH 16V 0.1U	1	
C821	ECUM1H270JCN	C.CAPACITOR CH 50V 27P	1	
C822	ECUM1H221JCN	C.CAPACITOR CH 50V 220P	1	
C823	ECUM1H120JCN	C.CAPACITOR CH 50V 12P	1	
C826	ECUM1H101JCN	C.CAPACITOR CH 50V 100P	1	
C827	ECUM1H100DCN	C.CAPACITOR CH 50V 10P	1	
C828	ECUM1H470JCN	C.CAPACITOR CH 50V 47P	1	
C829	ECUM1H330JCN	C.CAPACITOR CH 50V 33P	1	
C830,31	ECUM1H103KBN	C.CAPACITOR CH 50V 0.01U	2	
C901	ECUM1H151JCN	C.CAPACITOR CH 50V 150P	1	
C902	ECUM1H471JCN	C.CAPACITOR CH 50V 470P	1	
C951,52	ECUM1E104ZFN	C.CAPACITOR CH 25V 0.1U	2	
C953	ECEA1CU100	E.CAPACITOR 16V 10U	1	
C954,55	ECUM1E104ZFN	C.CAPACITOR CH 25V 0.1U	2	
C956	ECEA1CU100	E.CAPACITOR 16V 10U	1	
CN800	VJP1511T	CONNECTOR(MALE)	1	
CN801	VJP1393T	CONNECTOR(MALE) 13P	1	
CN802	VJP1231T	CONNECTOR(MALE) 4P	1	
D1,D2	MA151K	DIODE	2	
D101	MA151K	DIODE	1	
D102	MA151WK	DIODE	1	
D103	RD2.0EB2	DIODE	1	
D201	MA151K	DIODE	1	
D501	MA151WA	DIODE	1	
D502	MA151K	DIODE	1	
FL2	VLF1013	FILTER	1	
FL3	VLF1009	FILTER	1	
FL4	VLF1008	FILTER	1	
FL5,L6	VLF1011	FILTER	2	
IC1	HA118088MP	IC	1	
IC2	HA11567MP	IC	1	
IC3	HA11535MP	IC	1	
IC4	HD49410FS	IC	1	
IC5	HM53461ZP	IC	1	
IC6	AN79L05	IC	1	
IC8	MC74HC02AF	IC	1	
IC9	AN79L05	IC	1	
IC10	AN78L05	IC	1	
IC11	AN78M05F	IC	1	
IC12,13	AN78N05	IC	2	
IC501	MM74HC221AM	IC	1	
IC503	MC74HC00AF	IC	1	
IC504	MC74HC04AF	IC	1	
IC505	MC74HC157AF	IC	1	
IC801	M51272FP	IC	1	
IC951	AN78L05	IC	1	
IC952	AN79L05	IC	1	
L1	VLQEL05S101J	COIL 100UH	1	
L9	VLQEL05S101J	COIL 100UH	1	
L12	VLQ0578	COIL	1	
L13	VLQ0577	COIL	1	
L201	VLQEL05S101J	COIL 100UH	1	
L451,52	VLQEL05S101J	COIL 100UH	2	
L551,52	VLQEL05S101J	COIL 100UH	2	
L601,02	VLQEL05S470J	COIL 47UH	2	
L700	VLQEL05S101J	COIL 100UH	1	
L790	VLQEL05S150J	COIL 15UH	1	
L801	VLQEL05S101J	COIL 100UH	1	

Ref.No.	Part No.	Part Name & Description	Pcs	Remarks
L802	VLQEL05S150J	COIL 15UH	1	
L803	VLQEL05S5R6J	COIL 5.6UH	1	
L804	VLQEL05S6R8J	COIL 6.8UH	1	
L901	VLQEL05S180J	COIL 18UH	1	
L902	VLQEL05S56QJ	COIL 56UH	1	
Q1	2SA1022-B	TRANSISTOR CHIP	1	(B,C)
Q2	2SC2404-C	TRANSISTOR CHIP	1	(C,D)
Q3	2SD601-R	TRANSISTOR CHIP	1	(Q,R)
Q4	2SC2404-C	TRANSISTOR CHIP	1	(C,D)
Q5	2SA1022-B	TRANSISTOR CHIP	1	(B,C)
Q6	2SC2295-B	TRANSISTOR CHIP	1	(B,C)
Q7	2SB709-R	TRANSISTOR CHIP	1	(Q,R)
Q8	2SD601-R	TRANSISTOR CHIP	1	(Q,R)
Q100	2SB709-R	TRANSISTOR CHIP	1	(Q,R)
Q101	2SD601-R	TRANSISTOR CHIP	1	(Q,R)
Q102	2SB709-R	TRANSISTOR CHIP	1	(Q,R)
Q105	2SD601-R	TRANSISTOR CHIP	1	(Q,R)
Q106	2SB709-R	TRANSISTOR CHIP	1	(Q,R)
Q107	2SD601-R	TRANSISTOR CHIP	1	(Q,R)
Q108	2SB709-R	TRANSISTOR CHIP	1	(Q,R)
Q150,51	2SB709-R	TRANSISTOR CHIP	2	(Q,R)
Q200	2SB709-R	TRANSISTOR CHIP	1	(Q,R)
Q203	2SD601-R	TRANSISTOR CHIP	1	(Q,R)
Q206	2SD601-R	TRANSISTOR CHIP	1	(Q,R)
Q207	2SB709-R	TRANSISTOR CHIP	1	(Q,R)
Q208,09	2SD601-R	TRANSISTOR CHIP	2	(Q,R)
Q404,05	2SD601-R	TRANSISTOR CHIP	2	(Q,R)
Q406,07	2SC2295-B	TRANSISTOR CHIP	2	(B,C)
Q408	2SB709-R	TRANSISTOR CHIP	1	(Q,R)
Q501,02	UN2213	TRANSISTOR-RESISTOR	2	
Q601,02	2SD601-R	TRANSISTOR CHIP	2	(Q,R)
Q603	2SC2295-B	TRANSISTOR CHIP	1	(B,C)
Q604	2SB709-R	TRANSISTOR CHIP	1	(Q,R)
Q801	2SD601-R	TRANSISTOR CHIP	1	(Q,R)
Q802	2SC2295-B	TRANSISTOR CHIP	1	(B,C)
Q803	2SD601-R	TRANSISTOR CHIP	1	(Q,R)
Q805	2SD601-R	TRANSISTOR CHIP	1	(Q,R)
Q901-03	2SD601-R	TRANSISTOR CHIP	3	(Q,R)
		RESISTORS		
R6,R7	ERJ6GEYJ684	M.RESISTOR CH 1/10W 680K	2	
R8	ERJ6GEYJ123	M.RESISTOR CH 1/10W 12K	1	
R12	ERJ6GEYJ151	M.RESISTOR CH 1/10W 150	1	
R16	ERJ6GEYJ103	M.RESISTOR CH 1/10W 10K	1	
R18	ERJ6GEYJ104	M.RESISTOR CH 1/10W 100K	1	
R57	ERJ6GEYJ103	M.RESISTOR CH 1/10W 10K	1	
R100	ERJ6GEY0R00	M.RESISTOR CH 1/10W 0	1	
R101	ERJ6GEYJ561	M.RESISTOR CH 1/10W 560	1	
R102	ERJ6GEYJ471	M.RESISTOR CH 1/10W 470	1	
R103,04	ERJ6GEYJ102	M.RESISTOR CH 1/10W 1K	2	
R105	ERJ6GEYJ473	M.RESISTOR CH 1/10W 47K	1	
R106	ERJ6GEYJ681	M.RESISTOR CH 1/10W 680	1	
R107,08	ERJ6GEYJ102	M.RESISTOR CH 1/10W 1K	2	
R110	ERJ6GEYJ105	M.RESISTOR CH 1/10W 1M	1	
R111	ERJ6GEYJ331	M.RESISTOR CH 1/10W 330	1	
R112	ERJ6GEYJ681	M.RESISTOR CH 1/10W 680	1	
R113	ERJ6GEYJ272	M.RESISTOR CH 1/10W 2.7K	1	
R114	ERJ6GEYJ391	M.RESISTOR CH 1/10W 390	1	
R115	ERJ6GEYJ182	M.RESISTOR CH 1/10W 1.8K	1	
R116	ERJ6GEYJ822	M.RESISTOR CH 1/10W 8.2K	1	
R117	ERJ6GEYJ272	M.RESISTOR CH 1/10W 2.7K	1	
R118	ERJ6GEYJ221	M.RESISTOR CH 1/10W 220	1	
R119	ERJ6GEYJ330	M.RESISTOR CH 1/10W 33	1	
R120	ERJ6GEYJ333	M.RESISTOR CH 1/10W 33K	1	
R125,26	ERJ6GEYG223	M.RESISTOR CH 1/10W 22K	2	
R129	ERJ6GEYJ393	M.RESISTOR CH 1/10W 39K	1	
R130	ERJ6GEYJ184	M.RESISTOR CH 1/10W 180K	1	
R131,32	ERJ6GEYJ562	M.RESISTOR CH 1/10W 5.6K	2	
R133	ERJ6GEYJ102	M.RESISTOR CH 1/10W 1K	1	
R136	ERJ6GEYG223	M.RESISTOR CH 1/10W 22K	1	

Ref.No.	Part No.	Part Name & Description	Pcs	Remarks
R137	ERJ6GEYJ103	M.RESISTOR CH 1/10W 10K	1	
R138,39	ERJ6GEYJ102	M.RESISTOR CH 1/10W 1K	2	
R140	ERJ6GEY0R00	M.RESISTOR CH 1/10W 0	1	
R144	ERJ6GEY0R00	M.RESISTOR CH 1/10W 0	1	
R147	ERJ6GEY0R00	M.RESISTOR CH 1/10W 0	1	
R150	ERJ6GEYJ103	M.RESISTOR CH 1/10W 10K	1	
R151,52	ERJ6GEYJ102	M.RESISTOR CH 1/10W 1K	2	
R153	ERJ6GEYJ103	M.RESISTOR CH 1/10W 10K	1	
R154,55	ERJ6GEYJ102	M.RESISTOR CH 1/10W 1K	2	
R160	ERJ6GEYJ102	M.RESISTOR CH 1/10W 1K	1	
R180	ERJ6GEYJ124	M.RESISTOR CH 1/10W 120K	1	
R181	ERJ6GEYJ121		1	
R182	ERJ6GEYJ562	M.RESISTOR CH 1/10W 5.6K	1	
R183	ERJ6GEYJ682	M.RESISTOR CH 1/10W 6.8K	1	
R200	ERJ6GEY0R00	M.RESISTOR CH 1/10W 0	1	
R201	ERJ6GEYJ333	M.RESISTOR CH 1/10W 33K	1	
R202	ERJ6GEYJ330	M.RESISTOR CH 1/10W 33	1	
R204,05	ERJ6GEYJ102	M.RESISTOR CH 1/10W 1K	2	
R207	ERJ6GEYJ331	M.RESISTOR CH 1/10W 330	1	
R208	ERJ6GEYJ681	M.RESISTOR CH 1/10W 680	1	
R209	ERJ6GEYJ102	M.RESISTOR CH 1/10W 1K	1	
R217	ERJ6GEYJ221	M.RESISTOR CH 1/10W 220	1	
R218	ERJ6GEYJ822	M.RESISTOR CH 1/10W 8.2K	1	
R219	ERJ6GEYJ392	M.RESISTOR CH 1/10W 3.9K	1	
R220	ERJ6GEYJ182	M.RESISTOR CH 1/10W 1.8K	1	
R221	ERJ6GEYJ391	M.RESISTOR CH 1/10W 390	1	
R222	ERJ6GEYJ102	M.RESISTOR CH 1/10W 1K	1	
R229,30	ERJ6GEYG223	M.RESISTOR CH 1/10W 22K	2	
R231	ERJ6GEYJ393	M.RESISTOR CH 1/10W 39K	1	
R232	ERJ6GEYJ184	M.RESISTOR CH 1/10W 180K	1	
R233	ERJ6GEYJ472	M.RESISTOR CH 1/10W 4.7K	1	
R234	ERJ6GEYG223	M.RESISTOR CH 1/10W 22K	1	
R235	ERJ6GEYJ472	M.RESISTOR CH 1/10W 4.7K	1	
R236	ERJ6GEYG223	M.RESISTOR CH 1/10W 22K	1	
R237,38	ERJ6GEYJ562	M.RESISTOR CH 1/10W 5.6K	2	
R239,40	ERJ6GEYG223	M.RESISTOR CH 1/10W 22K	2	
R241	ERJ6GEYJ561	M.RESISTOR CH 1/10W 560	1	
R245	ERJ6GEYG223	M.RESISTOR CH 1/10W 22K	1	
R246	ERJ6GEYJ103	M.RESISTOR CH 1/10W 10K	1	
R250	ERJ6GEYJ102	M.RESISTOR CH 1/10W 1K	1	
R251	ERJ6GEYJ561	M.RESISTOR CH 1/10W 560	1	
R252	ERJ6GEYJ102	M.RESISTOR CH 1/10W 1K	1	
R260	ERJ6GEYJ155	M.RESISTOR CH 1/10W 1M	1	
R282	ERJ6GEYJ562	M.RESISTOR CH 1/10W 5.6K	1	
R283	ERJ6GEYJ682	M.RESISTOR CH 1/10W 6.8K	1	
R301	ERJ6GEYJ103	M.RESISTOR CH 1/10W 10K	1	
R302	ERJ6GEYJ821	M.RESISTOR CH 1/10W 820	1	
R303,04	ERJ6GEYJ102	M.RESISTOR CH 1/10W 1K	2	
R305	ERJ6GEYJ224	M.RESISTOR CH 1/10W 220K	1	
R306	ERJ6GEYJ333	M.RESISTOR CH 1/10W 33K	1	
R307,08	ERJ6GEYJ102	M.RESISTOR CH 1/10W 1K	2	
R309,10	ERJ6GEYJ101	M.RESISTOR CH 1/10W 100	2	
R311	ERJ6GEYJ122	M.RESISTOR CH 1/10W 1.2K	1	
R312	ERJ6GEYJ222	M.RESISTOR CH 1/10W 2.2K	1	
R313	ERJ6GEYJ470	M.RESISTOR CH 1/10W 47	1	
R314-16	ERJ6GEYJ222	M.RESISTOR CH 1/10W 2.2K	3	
R317	ERJ6GEYJ103	M.RESISTOR CH 1/10W 10K	1	
R318,19	ERJ6GEYJ102	M.RESISTOR CH 1/10W 1K	2	
R320	ERJ6GEYJ103	M.RESISTOR CH 1/10W 10K	1	
R321	ERJ6GEYJ102	M.RESISTOR CH 1/10W 1K	1	
R322-24	ERJ6GEYJ103	M.RESISTOR CH 1/10W 10K	3	
R328	ERJ6GEYJ681	M.RESISTOR CH 1/10W 680	1	
R329	ERJ6GEYJ470	M.RESISTOR CH 1/10W 47	1	
R330-32	ERJ6GEYJ102	M.RESISTOR CH 1/10W 1K	3	
R333	ERJ6GEY0R00	M.RESISTOR CH 1/10W 0	1	
R335	ERJ6GEY0R00	M.RESISTOR CH 1/10W 0	1	
R337	ERJ6GEY0R00	M.RESISTOR CH 1/10W 0	1	
R339	ERJ6GEY0R00	M.RESISTOR CH 1/10W 0	1	
R340	ERJ6GEYJ102	M.RESISTOR CH 1/10W 1K	1	
R342	ERJ6GEYJ103	M.RESISTOR CH 1/10W 10K	1	
R343	ERJ6GEY0R00	M.RESISTOR CH 1/10W 0	1	
R345	ERJ6GEY0R00	M.RESISTOR CH 1/10W 0	1	
R354-57	ERJ6GEY0R00	M.RESISTOR CH 1/10W 0	4	
R358	ERJ6GEYG561	M.RESISTOR CH 1/10W 560	1	
R359	ERJ6GEYG222	M.RESISTOR CH 1/10W 2.2K	1	

Ref.No.		Part No.	Part Name & Description	Pcs	Remarks
R360,61		ERJ6GEYG391	M.RESISTOR CH 1/10W 390	2	
R362		ERJ6GEYG222	M.RESISTOR CH 1/10W 2.2K	1	
R363		ERJ6GEYJ392	M.RESISTOR CH 1/10W 3.9K	1	
R407		VRE0034E681	M.RESISTOR CH 1/10W 680	1	
R409		VRE0034E181	M.RESISTOR CH 1/10W 180	1	
R410		ERJ6GEY0R00	M.RESISTOR CH 1/10W 0	1	
R411		VRE0034E152	M.RESISTOR CH 1/10W 1.5K	1	
R412		ERJ6GEYJ332	M.RESISTOR CH 1/10W 3.3K	1	
R413		ERJ6GEYJ470	M.RESISTOR CH 1/10W 47	1	
R414		ERJ6GEYJ103	M.RESISTOR CH 1/10W 10K	1	
R417		ERJ6GEYJ332	M.RESISTOR CH 1/10W 3.3K	1	
R418		VRE0034E681	M.RESISTOR CH 1/10W 680	1	
R419		VRE0034E221	M.RESISTOR CH 1/10W 220	1	
R420		ERJ6GEYJ150	M.RESISTOR CH 1/10W 15	1	
R421		ERJ6GEYJ470	M.RESISTOR CH 1/10W 47	1	
R422,23		ERJ6GEYJ102	M.RESISTOR CH 1/10W 1K	2	
R424		VRE0034E471	M.RESISTOR CH 1/10W 470	1	
R425,26		ERJ6GEYJ102	M.RESISTOR CH 1/10W 1K	2	
R427		VRE0034E221	M.RESISTOR CH 1/10W 220	1	
R428		VRE0034E471	M.RESISTOR CH 1/10W 470	1	
R429		ERJ6GEYJ332	M.RESISTOR CH 1/10W 3.3K	1	
R501		ERJ6GEYJ273	M.RESISTOR CH 1/10W 27K	1	
R502		ERJ6GEYJ104	M.RESISTOR CH 1/10W 100K	1	
R503		ERJ6GEYJ105	M.RESISTOR CH 1/10W 1M	1	
R504		ERJ6GEYJ562	M.RESISTOR CH 1/10W 5.6K	1	
R505,06		ERJ6GEYJ103	M.RESISTOR CH 1/10W 10K	2	
R507,08		ERJ6GEYJ104	M.RESISTOR CH 1/10W 100K	2	
R509		ERJ6GEY0R00	M.RESISTOR CH 1/10W 0	1	
R511,12		ERJ6GEYJ104	M.RESISTOR CH 1/10W 100K	2	
R513,14		ERJ6GEYJ391	M.RESISTOR CH 1/10W 390	2	
R601		ERJ6GEYG102	M.RESISTOR CH 1/10W 1K	1	
R602		ERJ6GEYG561	M.RESISTOR CH 1/10W 560	1	
R604		ERJ6GEYG471	M.RESISTOR CH 1/10W 470	1	
R605		ERJ6GEYJ332	M.RESISTOR CH 1/10W 3.3K	1	
R606		ERJ6GEYJ470	M.RESISTOR CH 1/10W 47	1	
R611		ERJ6GEYG102	M.RESISTOR CH 1/10W 1K	1	
R612		ERJ6GEYG561	M.RESISTOR CH 1/10W 560	1	
R614		ERJ6GEYG471	M.RESISTOR CH 1/10W 470	1	
R615		ERJ6GEYJ332	M.RESISTOR CH 1/10W 3.3K	1	
R616		ERJ6GEYJ470	M.RESISTOR CH 1/10W 47	1	
R617,18		ERJ6GEYJ102	M.RESISTOR CH 1/10W 1K	2	
R619		VRE0034E221	M.RESISTOR CH 1/10W 220	1	
R620		ERJ6GEYJ821	M.RESISTOR CH 1/10W 820	1	
R621		ERJ6GEYJ332	M.RESISTOR CH 1/10W 3.3K	1	
R622		ERJ6GEYJ470	M.RESISTOR CH 1/10W 47	1	
R704		ERJ6GEYJ103	M.RESISTOR CH 1/10W 10K	1	
R705		ERJ6GEYJ183	M.RESISTOR CH 1/10W 18K	1	
R709		ERJ6GEYG682	M.REISITOR CH 1/10W 6.8K	1	
R710		ERJ6GEYG153	M.RESISTOR CH 1/10W 15K	1	
R711		ERJ6GEYG333	M.RESISTOR CH 1/10W 33K	1	
R712		ERJ6GEYG682	M.REISITOR CH 1/10W 6.8K	1	
R713		ERJ6GEYG153	M.RESISTOR CH 1/10W 15K	1	
R714		ERJ6GEYG333	M.RESISTOR CH 1/10W 33K	1	
R720,21		ERJ6GEYJ103	M.RESISTOR CH 1/10W 10K	2	
R750		ERJ6GEYJ334	M.RESISTOR CH 1/10W 330K	1	
R802		VRE0034E273	M.RESISTOR CH 1/10W 27K	1	
R803		VRE0034E183	M.RESISTOR CH 1/10W 18K	1	
R804		ERJ6GEYJ332	M.RESISTOR CH 1/10W 3.3K	1	
R805		ERJ6GEYJ103	M.RESISTOR CH 1/10W 10K	1	
R806		ERJ6GEYJ472	M.RESISTOR CH 1/10W 4.7K	1	
R807		VRE0034E183	M.RESISTOR CH 1/10W 18K	1	
R808		VRE0034E273	M.RESISTOR CH 1/10W 27K	1	
R809		ERJ6GEYJ470	M.RESISTOR CH 1/10W 47	1	
R810		ERJ6GEYJ103	M.RESISTOR CH 1/10W 10K	1	
R811		VRE0034E301	M.RESISTOR CH 1/10W 300	1	
R812		VRE0034E151	M.RESISTOR CH 1/10W 150	1	
R813		VRE0034E561	M.RESISTOR CH 1/10W 560	1	
R814		ERJ6GEYJ470	M.RESISTOR CH 1/10W 47	1	
R815		ERJ6GEYJ102	M.RESISTOR CH 1/10W 1K	1	
R816		ERJ6GEYJ122	M.RESISTOR CH 1/10W 1.2K	1	
R818		ERJ6GEYJ332	M.RESISTOR CH 1/10W 3.3K	1	
R819		ERJ6GEYJ681	M.RESISTOR CH 1/10W 680	1	
R820		ERJ6GEYJ221	M.RESISTOR CH 1/10W 220	1	
R821		ERJ6GEYJ471	M.RESISTOR CH 1/10W 470	1	
R822		VRE0034E181	M.RESISTOR CH 1/10W 180	1	

Ref.No.		Part No.	Part Name & Description	Pcs	Remarks
R831		ERJ6GEYJ151	M.RESISTOR CH 1/10W 150	1	
R832		ERJ6GEYJ821	M.RESISTOR CH 1/10W 820	1	
R833		ERJ6GEYJ152	M.RESISTOR CH 1/10W 1.5K	1	
R834		ERJ6GEYJ330	M.RESISTOR CH 1/10W 33	1	
R901		ERJ6GEYG471	M.RESISTOR CH 1/10W 470	1	
R902		ERJ6GEYG221	M.RESISTOR CH 1/10W 220	1	
R903		ERJ6GEYG271	M.RESISTOR CH 1/10W 270	1	
R904		ERJ6GEYJ470	M.RESISTOR CH 1/10W 47	1	
R905		ERJ6GEYJ332	M.RESISTOR CH 1/10W 3.3K	1	
R906		ERJ6GEYJ391	M.RESISTOR CH 1/10W 390	1	
R907		ERJ6GEYJ821	M.RESISTOR CH 1/10W 820	1	
R908		ERJ6GEYJ562	M.RESISTOR CH 1/10W 5.6K	1	
R909		ERJ6GEYJ822	M.RESISTOR CH 1/10W 8.2K	1	
R910		ERJ6GEYJ332	M.RESISTOR CH 1/10W 3.3K	1	
R911		ERJ6GEY0R00	M.RESISTOR CH 1/10W 0	1	
R912		VRE0034E471	M.RESISTOR CH 1/10W 470	1	
R913		VRE0034E682	M.RESISTOR CH 1/10W 6.8K	1	
R914		VRE0034E822	M.RESISTOR CH 1/10W 8.2K	1	
R915		ERJ6GEYJ332	M.RESISTOR CH 1/10W 3.3K	1	
TP3		VJR0548	TEST POINT	1	
TP10,11		VJR0548	TEST POINT	2	
TP39		VJR0548	TEST POINT	1	
TP501		VJR0548	TEST POINT	1	
TP801		VJR0548	TEST POINT	1	
VC501		VCV0042	TRIMMER 50V 25P	1	
VR2		VRV0109B103	V.RESISTOR 10K	1	
VR3		VRV0109B202	V.RESISTOR 2K	1	
VR7		VRV0109B502	V.RESISTOR 5K	1	
VR8,R9		VRV0109B501	V.RESISTOR 500	2	
VR801,02		VRV0109B102	V.RESISTOR 1K	2	
VR901		VRV0109B202	V.RESISTOR 2K	1	
X1		VSX0544	CRYSTAL OSCILLATOR	1	
X2		VSX0542	CRYSTAL OSCILLATOR	1	
X3		VSX0544	CRYSTAL OSCILLATOR	1	
X4		VSX0542	CRYSTAL OSCILLATOR	1	
X501		VSX0126	CRYSTAL OSCILLATOR	1	
			MISCELLANEOUS		
		VMP2738	HOLDER ANGLE	1	
		VSC2489	SHIELD CASE	1	
		VSC2490	SHIELE CASE	1	
		XTV3+6F	SCREW	2	
	■	VEP81058A	P.C.BOARD W/COMPONENT		FOR AU-65H,AU-63H
			POWER FILTER		AU-62H
			CAPACITORS		
C2		ECQU2A224MN	P.CAPACITOR 250V 0.22U	1	
C3-C6		VCK0046	C.CAPACITOR	4	
C7		ECQU2A224MN	P.CAPACITOR 250V 0.22U	1	

Ref.No.		Part No.	Part Name & Description	Pcs	Remarks
F1		XBA2C63TB0	FUSE 6.3A 250V	1	
L1		VLF0930	COIL	1	
POWER20-22		VJP2638	CONNECTOR (MALE)	3	
			RESISTORS		
R1		ERG2SJ104	M.RESISTOR 2W 100K	1	
			MISCELLANEOUS		
		VJF0318	FUSE HOLDER	2	
		VMZ0730	CAPACITANCE COVER	4	
		VMZ1305	CAPACITANCE COVER	2	
	■	VYK3637	P.C.BOARD W/COMPONENT		FOR AU-65H,AU-63H
			POWER SUPPLY UNIT		AU-62H
			CAPACITORS		
C1		ECQU2A224MT	P.CAPACITOR AC250V 0.22U	1	
C2		ECQU2A224MT	P.CAPACITOR AC250V 0.22U	1	
C3		ECQB1H473KF	P.CAPACITOR 50V 0.047U	1	
C4,C5		ECQV1J105JZ	P.CAPACITOR 1U	2	
C6,C7		ECKDRS222ME	C.CAPACITOR AC400V 2200P	2	
C8,C9		ECOS2EA681EA	E.CAPACITOR 250V 680U	2	
C10		ECQE6104KF	P.CAPACITOR 630V 0.1UF	1	
C11		ECQB1H333KF	P.CAPACITOR 50V 0.033U	1	
C12		ECKD3A471KBP	C.CAPACITOR 1KV 470U	1	
C13		ECQV1J105JZ	P.CAPACITOR 1U	1	
C14		ECEA1VFE101	E.CAPACITOR 35V 100U	1	
C15		ECKD3A471KBP	C.CAPACITOR 1KV 470U	1	
C16		ECQV1J105JZ	P.CAPACITOR 63V 1UF	1	
C17		ECKD3A101KBP	C.CAPACITOR 1KV 100U	1	
C18,19		ECKDRS222ME	C.CAPACITOR AC400V 2200P	2	
C20		ECQB1H683KF	P.CAPACITOR 50V 0.068U	1	
C51		ECKD3A102KBP	C.CAPACITOR 1KV 1000P	1	
C52		ECKD3A681KBP	C.CAPACITOR 1KV 680U	1	
C53		ECEA1VFE102	E.CAPACITOR 35V 1000U	1	
C54		ECQB1H152KF	P.CAPACITOR 50V 1500P	1	
C55		ECQB1H102KF	P.CAPACITOR 50V 1000P	1	
C56		ECKD3A102KBP	C.CAPACITOR 1KV 1000P	1	
C57		ECKD3A681KBP	C.CAPACITOR 1KV 680U	1	
C58		ECA1AFQ102L	E.CAPACITOR 10V 1000U	1	
C59		ECEA1AFE152	E.CAPACITOR 10V 1500U	1	
C60		ECEA1HFE331	E.CAPACITOR 50V 330U	1	
C61		ECEA1EFE221	E.CAPACITOR 25V 220U	1	
C62,63		ECQB1H102KF	P.CAPACITOR 50V 1000P	2	
C64,65		ECKD3A681KBP	C.CAPACITOR 1KV 680U	2	
C66		ECEA1VFE102	E.CAPACITOR 25V 1000U	1	
C67		ECQB1H102KF	P.CAPACITOR 50V 1000P	1	
C68,69		ECKD3A681KBP	C.CAPACITOR 1KV 680U	2	
C70		ECEA1EFE681	E.CAPACITOR 25V 680U	1	
C71		ECEA1EFE471	E.CAPACITOR 25V 470U	1	
C72		ECQB1H102KF	P.CAPACITOR 50V 1000P	1	
C89		ECEA1HFE270	E.CAPACITOR 50V 27U	1	
C90		ECA1EKF100	E.CAPACITOR 25V 10U	1	

Ref.No.		Part No.	Part Name & Description	Pcs	Remarks
C91		ECEA1EFE471	E.CAPACITOR 25V 470U	1	
C92		ECQB1H222KF	P.CAPACITOR 50V 2200P	1	
C93		ECQB1H102KF	P.CAPACITOR 50V 1000P	1	
C94		ECQB1H473KF	P.CAPACITOR 50V 0.047U	1	
C95		ECQV1H224JZ	P.CAPACITOR 50V 0.22U	1	
C96		ECQB1H103KF	P.CAPACITOR 50V 0.01U	1	
CP1		VJP2824B004	CONNECTOR (MALE)	1	
CP2		VJP3015	CONNECTOR (MALE)	1	
CP51		VJP2824B006	CONNECTOR (MALE)	1	
CP52		VJP2824B007	CONNECTOR (MALE)	1	
CP53		VJP2824B008	CONNECTOR (MALE)	1	
CP54		VJP3016	CONNECTOR (MALE)	1	
CR1		AC08PGM	DIODE	1	
CR2		ERB44-06	DIODE	1	
CR3		RD75EB	ZENER	1	
CR4,R5		RD68EB	ZENER	2	
CR6		RD12EB2	DIODE	1	
CR7		RBV606	DIODE	1	
CR8,R9		1SS118	DIODE	2	
CR10		AC08PGM	DIODE	1	
CR11		N413	DIODE	1	
CR12		11DF2	DIODE	1	
CR13		ERB37-10	DIODE	1	
CR14		11DF2	DIODE	1	
CR15,16		ERB37-10	DIODE	2	
CR51		ESAC92M-03	DIODE	1	
CR52		CTB-34	DIODE	1	
CR53,54		1SS120	DIODE	3	
CR55		11DF2	DIODE	1	
CR56		RD13EB2	ZENER	1	
CR57		1SS120	DIODE	1	
CR58		RD9.1ESB2	ZENER	1	
CR59		RD39ESB2	ZENER	1	
F1		EYP2BN098	FUSE	1	
L1		VLF0930	COIL	1	
Q1		2SA1015Y	TRANSISTOR	1	
Q2		2SA562TMY	TRANSISTOR	1	
Q3		2SA1015Y	TRANSISTOR	1	
Q53		2SC2655Y	TRANSISTOR	1	
Q54		2SC1815Y	TRANSISTOR	1	
Q56		2SC1815Y	TRANSISTOR	1	
Q57		2SC2655Y	TRANSISTOR	1	
Q58		2SA1015Y	TRANSISTOR	1	
Q59		2SC1815Y	TRANSISTOR	1	
Q60		2SC1815Y	TRANSISTOR	1	
			RESISTORS		
R1		ERF5RJ220	W.RESISTOR 5W 22	1	
R2		ERDS2FJ102	C.RESISTOR 1/4W 1K	1	
R3		ERDS2FJ104	C.RESISTOR 1/4W 100K	1	
R4		ERDS2FJ473	C.RESISTOR 1/4W 47K	1	
R5		ERDS2FJ472	C.RESISTOR 1/4W 4.7K	1	
R6		ERD25FJ124	C.RESISTOR 1/4W 120K	1	
R7		ERDS2FJ105	C.RESISTOR 1/4W 1M	1	
R8		ERDS2FJ103	C.RESISTOR 1/4W 10K	1	
R9		ERDS2FJ473	C.RESISTOR 1/4W 47K	1	
R10		ERDS2FJ102	C.RESISTOR 1/4W 1K	1	
R11		ERG2SJ120	M.RESISTOR 2W 12	1	

Ref.No.		Part No.	Part Name & Description			Pcs	Remarks
R12		ERX2SJ3R9	M.RESISTOR	2W	3.9	1	
R13		ERD25FJ102	C.RESISTOR	1/4W	1K	1	
R14		ERG2SJ330	M.RESISTOR	2W	33	1	
R15,16		ERD50FJ184	C.RESISTOR	1/4W	180K	2	
R17,18		ERD50FJ104	C.RESISTOR	1/2W	100K	2	
R19		ERDS2FJ471	C.RESISTOR	1/4W	470	1	
R20		ERDS2FJ2R2	C.RESISTOR	1/4W	2.2	1	
R21		ERF5RJ220	W.RESISTOR	5W	22	1	
R22		ERD50FJ100	C.RESISTOR	1/2W	10	1	
R23		ERD50FJ150	C.RESISTOR	1/2W	15	1	
R24		ERD50FJ471	C.RESISTOR	1/2W	470	1	
R25		ERF5RJ220	W.RESISTOR	5W	22	1	
R26		ERDS2FJ471	C.RESISTOR	1/6W	470	1	
R27		ERDS2FJ2R2	C.RESISTOR	1/4W	2.2	1	
R28		ERD50FJ150	C.RESISTOR	1/2W	15	1	
R29		ERD50FJ471	C.RESISTOR	1/2W	470	1	
R30		ERD50FJ100	C.RESISTOR	1/2W	10	1	
R31		ERD25FJ124	C.RESISTOR	1/4W	120K	1	
R32		ERD50FJ105	C.RESISTOR	1/4W	1M	1	
R33		ERG2SJ330	M.RESISTOR	2W	33	1	
R34		ERDS2FJ102	C.RESISTOR	1/4W	1K	1	
R35		ERD25FJ221	C.RESISTOR	1/4W	220	1	
R51,52		ERD50FJ100	C.RESISTOR	1/2W	10	2	
R53		ERF5RJ221	W.RESISTOR	5W	220	1	
R54		ERG1ANJ470	M.RESISTOR	1W	47	1	
R55		ERQS2CHF1000	M.RESISTOR	1/6W	100	1	
R56		ERQS2CHF39R0	M.RESISTOR	1/6W	39	1	
R57,58		ERD50FJ100	C.RESISTOR	1/2W	10	2	
R59-61		ERD50FJ101	C.RESISTOR	1/2W	100	3	
R62,63		ERD50FJ122	C.RESISTOR	1/2W	1.2K	2	
R64		ERDS2FJ471	C.RESISTOR	1/4W	470	1	
R65		ERD25FJ471	C.RESISTOR	1/4W	470	1	
R66		ERQS2CHF4702	M.RESISTOR	1/4W	47K	1	
R67		ERQS2CHF1802	M.RESISTOR	1/4W	18K	1	
R68		ERDS2FJ101	C.RESISTOR	1/4W	100	1	
R69,70		ERDS2FJ102	C.RESISTOR	1/4W	1K	2	
R71		ERD25FJ6R8	C.RESISTOR	1/4W	6.8K	1	
R72		ERD50FJ102	C.RESISTOR	1/2W	1K	1	
R73		ERDS2FJ331	C.RESISTOR	1/4W	330	1	
R74		ERDS2FJ102	C.RESISTOR	1/4W	1K	1	
R75		ERDS2FJ222	C.RESISTOR	1/4W	2.2K	1	
R76		ERDS2FJ912	C.RESISTOR	1/4W	9.1K	1	
R77		ERQS2CHF1201	M.RESISTOR	1/4W	1.2K	1	
R78		ERDS2FJ102	C.RESISTOR	1/4W	1K	1	
R79		ERDS2FJ223	C.RESISTOR	1/4W	22K	1	
R80		ERDS2FJ104	C.RESISTOR	1/4W	100K	1	
R81		VRV0112B102	V.RESISTOR	1/2W	1K	1	
R82		ERQS2CHF1801	M.RESISTOR	1/4W	1.8K	1	
R83		ERQS2CHF6800	M.RESISTOR	1/4W	680	1	
R84		ERDS2FJ222	C.RESISTOR	1/4W	2.2K	1	
R85		VRT0029	THERMISTER			1	
R86		ERDS2FJ332	C.RESISTOR	1/4W	3.3K	1	
R87		ERDS2FJ222	C.RESISTOR	1/4W	2.2K	1	
R89		ERDS2FJ103	C.RESISTOR	1/4W	10K	1	
R90		ERDS2FJ222	C.RESISTOR	1/4W	2.2K	1	
R91		ERQS2CHF1800	M.RESISTOR	1/4W	180	1	
R92,93		ERD50FJ100	C.RESISTOR	1/2W	10	2	
R94		ERD50FJ122	C.RESISTOR	1/2W	1.2K	1	
R95		ERQS2CHF1500	M.RESISTOR	1/4W	150	1	
R96,97		ERD50FJ100	C.RESISTOR	1/2W	10	2	
R98		ERD50FJ102	C.RESISTOR	1/2W	1K	1	
R99		ERDS2FJ102	C.RESISTOR	1/4W	1K	1	
R100		ERQS2CHF2700	M.RESISTOR	1/4W	270	1	
R101,02		ERD50FJ100	C.RESISTOR	1/2W	10	2	
R103		ERD50FJ471	C.RESISTOR	1/2W	470	1	
R104		ERQS2CHF2700	M.RESISTOR	1/4W	270	1	
R105		ERD50FJ102	C.RESISTOR	1/2W	1K	1	
R106		ERD50FJ561	C.RESISTOR	1/2W	560	1	
R107		ERQS2CHF2700	M.RESISTOR	1/4W	270	1	
R108		ERD25FJ471	C.RESISTOR	1/4W	470	1	
R109		ERQS2CHF4702	M.RESISTOR	1/4W	47K	1	
R110		ERQS2CHF2202	M.RESISTOR	1/4W	22K	1	
R111		ERDS2FJ471	C.RESISTOR	1/4W	470	1	
R112		ERD25FJ6R8	C.RESISTOR	1/4W	6.8K	1	
R113		ERD50FJ681	C.RESISTOR	1/2W	680	1	

Ref.No.		Part No.	Part Name & Description			Pcs	Remarks
R114		ERDS2FJ331	C.RESISTOR	1/4W	330	1	
R115		ERDS2FJ102	C.RESISTOR	1/4W	1K	1	
R116		ERDS2FJ331	C.RESISTOR	1/4W	330	1	
R117		ERDS2FJ471	C.RESISTOR	1/4W	470	1	
R118		ERQS2CHF2201	M.RESISTOR	1/4W	2.2K	1	
R119		ERQS2CHF1501	M.RESISTOR	1/4W	1.5K	1	
R120		ERDS2FJ223	C.RESISTOR	1/4W	22K	1	
R121		ERQS2CHF1201	M.RESISTOR	1/4W	1.2K	1	
R122		VRV0112B102	V.RESISTOR	1/2W	1K	1	
R123		ERQS2CHF3301	M.RESISTOR	1/4W	3.3K	1	
R124		ERDS2FJ121	C.RESISTOR	1/4W	120	1	
R125		ERQS2CHF1101	M.RESISTOR	1/4W	1.1K	1	
R126-29		ERD50FJ100	C.RESISTOR	1/2W	10	4	
R130		ERQS2CHF6800	M.RESISTOR	1/4W	680	1	
R131,32		ERDS2FJ332	C.RESISTOR	1/4W	3.3K	2	
R134		ERDS2FJ103	C.RESISTOR	1/4W	10K	1	
R135		ERDS2FJ562	C.RESISTOR	1/4W	5.6K	1	
R136		ERDS2FJ102	C.RESISTOR	1/4W	1K	1	
R137		ERDS2FJ392	C.RESISTOR	1/4W	3.9K	1	
R138		ERDS2FJ102	C.RESISTOR	1/4W	1K	1	
R139		ERDS2FJ101	C.RESISTOR	1/4W	100	1	
R140,41		ERDS2FJ102	C.RESISTOR	1/4W	1K	2	
R142		ERDS2FJ182	C.RESISTOR	1/4W	1.8K	1	
R143		ERDS2FJ222	C.RESISTOR	1/4W	2.2K	1	
R144		ERF5RJ221	W.RESISTOR	5W	220	1	
R146		ERQS2CHF3000	M.RESISTOR	1/4W	300	1	
T1		VTP0324	TRANSFORMER			1	
T2		VTP0325	TRANSFORMER			1	
T3,T4		VTP0326	TRANSFORMER			2	
T51-57		VLT0630	TRANSFORMER			7	
			MISCELLANEOUS				
		VHD0601	SCREW			4	
		VMP2697	SUPPORT			2	
		VMZ1609	INSULATOR			2	
		VMZ1610	INSULATOR			2	
		VSC3125	COOLING BODY			1	
		VSC3136	INSULATOR			1	
		VSC3400	COOLING BODY			2	
		XNG3E5	SCREW (NUT)			2	
		XNG3E8	NUT			1	
		XYNV3+K8	SCREW			2	
		XYNV3+K8	SCREW			10	
	■	VEP85015D	P.C.BOARD	W/COMPONENT			FOR AU-65H
			RA & HA				
			CAPACITORS				
C1		ECEA1HUR33	E.CAPACITOR	50V	0.33U	1	
C2		ECEA1CU100	E.CAPACITOR	16V	10U	1	
C3		ECUM1H103KBN	C.CAPACITOR CH	50V	0.01U	1	
C4		ECEA1HUR33	E.CAPACITOR	50V	0.33U	1	
C5		ECEA1CU100	E.CAPACITOR	16V	10U	1	
C6		ECUM1H103KBN	C.CAPACITOR CH	50V	0.01U	1	
C7		ECEA1AU101	E.CAPACITOR	10V	100U	1	
C17		ECEA1AU101	E.CAPACITOR	10V	100U	1	
C27-30		ECUM1E104ZFN	C.CAPACITOR CH	25V	0.1U	4	
C31-39		ECUM1H103KBN	C.CAPACITOR CH	50V	0.01U	9	
C40		ECUM1E104ZFN	C.CAPACITOR CH	25V	0.1U	1	
C41		ECUM1H103KBN	C.CAPACITOR CH	50V	0.01U	1	

Ref.No.	Part No.	Part Name & Description	Pcs	Remarks
C42	ECUM1E104ZFN	C.CAPACITOR CH 25V 0.1U	1	
C43	ECUM1H103KBN	C.CAPACITOR CH 50V 0.01U	1	
C44	ECUM1E104ZFN	C.CAPACITOR CH 25V 0.1U	1	
C45	ECUM1H103KBN	C.CAPACITOR CH 50V 0.01U	1	
C46,47	ECUM1E104ZFN	C.CAPACITOR CH 25V 0.1U	2	
C48	ECUM1H220JCN	C.CAPACITOR CH 50V 22P	1	
C50	ECUM1E104ZFN	C.CAPACITOR CH 25V 0.1U	1	
C51	ECUM1H220JCN	C.CAPACITOR CH 50V 22P	1	
C53	ECUM1E104ZFN	C.CAPACITOR CH 25V 0.1U	1	
C54	ECUM1H220JCN	C.CAPACITOR CH 50V 22P	1	
C56	ECUM1E104ZFN	C.CAPACITOR CH 25V 0.1U	1	
C57	ECUM1H220JCN	C.CAPACITOR CH 50V 22P	1	
C59	ECUM1H103KBN	C.CAPACITOR CH 50V 0.01U	1	
C60	ECEA1AU101	E.CAPACITOR 10V 100U	1	
C61,62	ECUM1E104ZFN	C.CAPACITOR CH 25V 0.1U	2	
C63	ECUM1H103KBN	C.CAPACITOR CH 50V 0.01U	1	
C64	ECEA1AU101	E.CAPACITOR 10V 100U	1	
C65,66	ECUM1E104ZFN	C.CAPACITOR CH 25V 0.1U	2	
C67	ECUM1H103KBN	C.CAPACITOR CH 50V 0.01U	1	
C68	ECEA1AU101	E.CAPACITOR 10V 100U	1	
C69,70	ECUM1E104ZFN	C.CAPACITOR CH 25V 0.1U	2	
C71	ECUM1H103KBN	C.CAPACITOR CH 50V 0.01U	1	
C72	ECEA1AU101	E.CAPACITOR 10V 100U	1	
C73,74	ECUM1E104ZFN	C.CAPACITOR CH 25V 0.1U	2	
C75-78	ECEA1CU470	E.CAPACITOR 16V 47U	4	
C79	ECUM1H103KBN	C.CAPACITOR CH 50V 0.01U	1	
C80	ECEA1EU470	E.CAPACITOR 25V 47U	1	
C81-86	ECCD2H330JC	C.CAPACITOR 500V 33P	6	
C87	ECEA1EU470	E.CAPACITOR 25V 47U	1	
C88	ECUM1H103KBN	C.CAPACITOR CH 50V 0.01U	1	
C201	ECUM1H103KBN	C.CAPACITOR CH 50V 0.01U	1	
C202	ECEA1EU100	E.CAPACITOR 25V 10U	1	
C203	ECUM1H103KBN	C.CAPACITOR CH 50V 0.01U	1	
C204	ECSF0JE106	T.CAPACITOR 6.3V 10U	1	
C205	ECUM1H103KBN	C.CAPACITOR CH 50V 0.01U	1	
C206	ECUM1E104ZFN	C.CAPACITOR CH 25V 0.1U	1	
C207	ECEA1CU470	E.CAPACITOR 16V 47U	1	
C208,09	ECUM1H103KBN	C.CAPACITOR CH 50V 0.01U	2	
C210	ECEA1EU100	E.CAPACITOR 25V 10U	1	
C211	ECUM1H103KBN	C.CAPACITOR CH 50V 0.01U	1	
C212	ECSF0JE106	T.CAPACITOR 6.3V 10U	1	
C213	ECUM1H103KBN	C.CAPACITOR CH 50V 0.01U	1	
C214	ECUM1E104ZFN	C.CAPACITOR CH 25V 0.1U	1	
C215	ECEA1CU470	E.CAPACITOR 16V 47U	1	
C216,17	ECUM1H103KBN	C.CAPACITOR CH 50V 0.01U	2	
C218	ECEA1EU100	E.CAPACITOR 25V 10U	1	
C219	ECUM1H103KBN	C.CAPACITOR CH 50V 0.01U	1	
C220	ECSF0JE106	T.CAPACITOR 6.3V 10U	1	
C221	ECUM1H103KBN	C.CAPACITOR CH 50V 0.01U	1	
C222	ECUM1E104ZFN	C.CAPACITOR CH 25V 0.1U	1	
C223	ECEA1CU470	E.CAPACITOR 16V 47U	1	
C224,25	ECUM1H103KBN	C.CAPACITOR CH 50V 0.01U	2	
C226	ECEA1EU100	E.CAPACITOR 25V 10U	1	
C227	ECUM1H103KBN	C.CAPACITOR CH 50V 0.01U	1	
C228	ECSF0JE106	T.CAPACITOR 6.3V 10U	1	
C229	ECUM1H103KBN	C.CAPACITOR CH 50V 0.01U	1	
C230	ECUM1E104ZFN	C.CAPACITOR CH 25V 0.1U	1	
C231	ECEA1CU470	E.CAPACITOR 16V 47U	1	
C232	ECUM1H103KBN	C.CAPACITOR CH 50V 0.01U	1	
C233,34	ECEA1CU470	E.CAPACITOR 16V 47U	2	
C235,36	ECUM1E104ZFN	C.CAPACITOR CH 25V 0.1U	2	
CN81	VJP3079	CONNECTOR (MALE)	1	
CN82	VJP1233R	CONNECTOR(MALE) 6P	1	
CN83	VJP1233T	CONNECTOR(MALE) 6P	1	
CN84	VJP1233G	CONNECTOR(MALE) 6P	1	
CN85	VJP1233T	CONNECTOR(MALE) 6P	1	
CN86	VJP1233G	CONNECTOR(MALE) 6P	1	
CN87	VJP1233T	CONNECTOR(MALE) 6P	1	
D201	MA151K	DIODE	1	

Ref.No.	Part No.	Part Name & Description	Pcs	Remarks
IC1	AN78N05	IC	1	
IC2	AN79N05	IC	1	
IC7-C9	AN6308S	IC	3	
IC10	AN6308S	IC	1	
IC11-14	NJM592M8	IC	4	
IC201-04	NJM592M8	IC	4	
IC205	AN78N09	IC	1	
L1-L6	VLQEL05S101K	COIL 100UH	6	
L7-L9	VLQEL05S470K	COIL 47UH	3	
L10	VLQEL05S470K	COIL 47UH	1	
L11,12	VLQEL05S101K	COIL 100UH	2	
L13,14	VLQ0211M2R7	COIL	2	
L201-05	VLQEL05S101K	COIL 100UH	5	
Q5-Q8	2SC2295-B	TRANSISTOR CHIP	4	(B,C)
Q9	2SC2851	TRANSISTOR	1	
Q10-16	2SC2851	TRANSISTOR	7	
Q17-23	2SB789-Q	TRANSISTOR	7	<R>
Q201	2SC3757	TRANSISTOR	1	(Q,R)
Q202,03	2SK316	TRANSISTOR	2	(Q)
Q204,05	2SC3757	TRANSISTOR	2	(Q,R)
Q206,07	2SK316	TRANSISTOR	2	(Q)
Q208,09	2SC3757	TRANSISTOR	2	(Q,R)
Q210,11	2SK316	TRANSISTOR	2	(Q)
Q212,13	2SC3757	TRANSISTOR	2	(Q,R)
Q214,15	2SK316	TRANSISTOR	2	(Q)
Q216	2SC3757	TRANSISTOR	1	(Q,R)
Q217	2SD602	TRANSISTOR CHIP	1	(Q,R,S)
Q218	UN2213	TRANSISTOR-RESISTOR	1	
Q219	2SB643	TRANSISTOR	1	
Q220,21	2SD602	TRANSISTOR CHIP	2	(Q,R,S)
Q222-25	2SC3757	TRANSISTOR	4	(Q,R)
		RESISTORS		
R8	ERJ6GEYJ750	M.RESISTOR CH 1/10W 75	1	
R16	ERJ6GEYJ750	M.RESISTOR CH 1/10W 75	1	
R21,22	ERJ6GEYJ470	M.RESISTOR CH 1/10W 47	2	
R27,28	ERJ6GEYJ470	M.RESISTOR CH 1/10W 47	2	
R29	ERJ6GEYJ103	M.RESISTOR CH 1/10W 10K	1	
R30	ERJ6GEYJ122	M.RESISTOR CH 1/10W 1.2K	1	
R31	ERJ6GEYJ103	M.RESISTOR CH 1/10W 10K	1	
R32	ERJ6GEYJ122	M.RESISTOR CH 1/10W 1.2K	1	
R33	ERJ6GEYJ103	M.RESISTOR CH 1/10W 10K	1	
R34	ERJ6GEYJ122	M.RESISTOR CH 1/10W 1.2K	1	
R35	ERJ6GEYJ103	M.RESISTOR CH 1/10W 10K	1	
R36	ERJ6GEYJ122	M.RESISTOR CH 1/10W 1.2K	1	
R37	ERJ6GEYJ222	M.RESISTOR CH 1/10W 2.2K	1	
R38	ERJ6GEYJ471	M.RESISTOR CH 1/10W 470	1	
R39	ERJ6GEYJ151	M.RESISTOR CH 1/10W 150	1	
R40	ERJ6GEYJ471	M.RESISTOR CH 1/10W 470	1	
R41	ERJ6GEYJ101	M.RESISTOR CH 1/10W 100	1	
R42	ERJ6GEYJ681	M.RESISTOR CH 1/10W 680	1	
R43,44	ERJ6GEYJ222	M.RESISTOR CH 1/10W 2.2K	2	
R45,46	ERJ6GEYJ470	M.RESISTOR CH 1/10W 47	2	
R47	ERJ6GEYJ222	M.RESISTOR CH 1/10W 2.2K	1	
R48	ERJ6GEYJ471	M.RESISTOR CH 1/10W 470	1	
R49	ERJ6GEYJ151	M.RESISTOR CH 1/10W 150	1	
R50	ERJ6GEYJ471	M.RESISTOR CH 1/10W 470	1	
R51	ERJ6GEYJ101	M.RESISTOR CH 1/10W 100	1	
R52	ERJ6GEYJ681	M.RESISTOR CH 1/10W 680	1	
R53,54	ERJ6GEYJ222	M.RESISTOR CH 1/10W 2.2K	2	
R55,56	ERJ6GEYJ470	M.RESISTOR CH 1/10W 47	2	
R57	ERJ6GEYJ222	M.RESISTOR CH 1/10W 2.2K	1	
R58	ERJ6GEYJ471	M.RESISTOR CH 1/10W 470	1	
R59	ERJ6GEYJ151	M.RESISTOR CH 1/10W 150	1	

Ref.No.	Part No.	Part Name & Description	Pcs	Remarks
R60	ERJ6GEYJ471	M.RESISTOR CH 1/10W 470	1	
R61	ERJ6GEYJ101	M.RESISTOR CH 1/10W 100	1	
R62	ERJ6GEYJ681	M.RESISTOR CH 1/10W 680	1	
R63,64	ERJ6GEYJ222	M.RESISTOR CH 1/10W 2.2K	2	
R65,66	ERJ6GEYJ470	M.RESISTOR CH 1/10W 47	2	
R67	ERJ6GEYJ222	M.RESISTOR CH 1/10W 2.2K	1	
R68	ERJ6GEYJ471	M.RESISTOR CH 1/10W 470	1	
R69	ERJ6GEYJ151	M.RESISTOR CH 1/10W 150	1	
R70	ERJ6GEYJ471	M.RESISTOR CH 1/10W 470	1	
R71	ERJ6GEYJ101	M.RESISTOR CH 1/10W 100	1	
R72	ERJ6GEYJ681	M.RESISTOR CH 1/10W 680	1	
R73,74	ERJ6GEYJ222	M.RESISTOR CH 1/10W 2.2K	2	
R75,76	ERJ6GEYJ470	M.RESISTOR CH 1/10W 47	2	
R77	ERJ6GEYJ152	M.RESISTOR CH 1/10W 1.5K	1	
R78	ERJ6GEYJ102	M.RESISTOR CH 1/10W 1K	1	
R79	ERDS2TJ470	C.RESISTOR 1/4W 47	1	
R80	ERJ6GEYJ680	M.RESISTOR CH 1/10W 68	1	
R81	ERDS2TJ470	C.RESISTOR 1/4W 47	1	
R82	ERJ6GEYJ102	M.RESISTOR CH 1/10W 1K	1	
R83	ERJ6GEYJ152	M.RESISTOR CH 1/10W 1.5K	1	
R84	ERJ6GEYJ102	M.RESISTOR CH 1/10W 1K	1	
R85,86	ERJ6GEYJ331	M.RESISTOR CH 1/10W 330	2	
R87	ERJ6GEYJ152	M.RESISTOR CH 1/10W 1.5K	1	
R88	ERJ6GEYJ102	M.RESISTOR CH 1/10W 1K	1	
R89	ERDS2TJ470	C.RESISTOR 1/4W 47	1	
R90	ERJ6GEYJ680	M.RESISTOR CH 1/10W 68	1	
R91	ERDS2TJ470	C.RESISTOR 1/4W 47	1	
R92	ERJ6GEYJ751	M.RESISTOR CH 1/10W 750	1	
R93	ERJ6GEYJ152	M.RESISTOR CH 1/10W 1.5K	1	
R94	ERJ6GEYJ102	M.RESISTOR CH 1/10W 1K	1	
R95,96	ERJ6GEYJ331	M.RESISTOR CH 1/10W 330	2	
R97	ERJ6GEYJ152	M.RESISTOR CH 1/10W 1.5K	1	
R98	ERJ6GEYJ102	M.RESISTOR CH 1/10W 1K	1	
R99	ERDS2TJ470	C.RESISTOR 1/4W 47	1	
R100	ERJ6GEYJ680	M.RESISTOR CH 1/10W 68	1	
R101	ERDS2TJ470	C.RESISTOR 1/4W 47	1	
R102	ERJ6GEYJ102	M.RESISTOR CH 1/10W 1K	1	
R103	ERJ6GEYJ152	M.RESISTOR CH 1/10W 1.5K	1	
R104	ERJ6GEYJ102	M.RESISTOR CH 1/10W 1K	1	
R105,06	ERJ6GEYJ331	M.RESISTOR CH 1/10W 330	2	
R107	ERJ6GEYJ152	M.RESISTOR CH 1/10W 1.5K	1	
R108	ERJ6GEYJ102	M.RESISTOR CH 1/10W 1K	1	
R109	ERDS2TJ470	C.RESISTOR 1/4W 47	1	
R110	ERJ6GEYJ680	M.RESISTOR CH 1/10W 68	1	
R111	ERDS2TJ470	C.RESISTOR 1/4W 47	1	
R112	ERJ6GEYJ102	M.RESISTOR CH 1/10W 1K	1	
R113	ERJ6GEYJ152	M.RESISTOR CH 1/10W 1.5K	1	
R114	ERJ6GEYJ102	M.RESISTOR CH 1/10W 1K	1	
R115,16	ERJ6GEYJ331	M.RESISTOR CH 1/10W 330	2	
R117	ERJ6GEYJ332	M.RESISTOR CH 1/10W 3.3K	1	
R118	ERJ6GEYJ103	M.RESISTOR CH 1/10W 10K	1	
R119	ERJ6GEYJ182	M.RESISTOR CH 1/10W 1.8K	1	
R120	ERJ6GEYJ472	M.RESISTOR CH 1/10W 4.7K	1	
R121	ERJ8GCJ820	M.RESISTOR CH 1/8W 82	1	
R122,23	ERJ6GEYJ821	M.RESISTOR CH 1/10W 820	2	
R124,25	ERJ6GEYJ332	M.RESISTOR CH 1/10W 3.3K	2	
R126	ERJ6GEYJ103	M.RESISTOR CH 1/10W 10K	1	
R127	ERJ6GEYJ101	M.RESISTOR CH 1/10W 100	1	
R128	ERJ6GEYJ103	M.RESISTOR CH 1/10W 10K	1	
R129	ERJ6GEYJ182	M.RESISTOR CH 1/10W 1.8K	1	
R130	ERJ6GEYJ472	M.RESISTOR CH 1/10W 4.7K	1	
R131	ERJ8GCJ820	M.RESISTOR CH 1/8W 82	1	
R132,33	ERJ6GEYJ821	M.RESISTOR CH 1/10W 820	2	
R134,35	ERJ6GEYJ332	M.RESISTOR CH 1/10W 3.3K	2	
R136	ERJ6GEYJ103	M.RESISTOR CH 1/10W 10K	1	
R137	ERJ6GEYJ101	M.RESISTOR CH 1/10W 100	1	
R138	ERJ6GEYJ103	M.RESISTOR CH 1/10W 10K	1	
R201	ERJ6GEYJ332	M.RESISTOR CH 1/10W 3.3K	1	
R202	ERJ6GEYJ470	M.RESISTOR CH 1/10W 47	1	
R203	ERJ6GEYJ222	M.RESISTOR CH 1/10W 2.2K	1	
R204	ERJ6GEYG223	M.RESISTOR CH 1/10W 22K	1	
R205	ERJ6GEYJ472	M.RESISTOR CH 1/10W 4.7K	1	
R206-08	ERJ6GEYJ152	M.RESISTOR CH 1/10W 1.5K	3	
R209	ERJ6GEYJ680	M.RESISTOR CH 1/10W 68	1	
R210	ERJ6GEYJ272	M.RESISTOR CH 1/10W 2.7K	1	

Ref.No.	Part No.	Part Name & Description	Pcs	Remarks
R211	ERJ6GEYJ102	M.RESISTOR CH 1/10W 1K	1	
R212	ERJ6GEYJ470	M.RESISTOR CH 1/10W 47	1	
R213	ERJ6GEYJ103	M.RESISTOR CH 1/10W 10K	1	
R214	ERJ6GEYJ470	M.RESISTOR CH 1/10W 47	1	
R215	ERJ6GEYJ103	M.RESISTOR CH 1/10W 10K	1	
R216	ERJ6GEYJ101	M.RESISTOR CH 1/10W 100	1	
R217	ERJ6GEYJ470	M.RESISTOR CH 1/10W 47	1	
R218	ERJ6GEYJ471	M.RESISTOR CH 1/10W 470	1	
R219	ERJ6GEYJ332	M.RESISTOR CH 1/10W 3.3K	1	
R220	ERJ6GEYJ470	M.RESISTOR CH 1/10W 47	1	
R221	ERJ6GEYJ222	M.RESISTOR CH 1/10W 2.2K	1	
R222	ERJ6GEYG223	M.RESISTOR CH 1/10W 22K	1	
R223	ERJ6GEYJ472	M.RESISTOR CH 1/10W 4.7K	1	
R224-26	ERJ6GEYJ152	M.RESISTOR CH 1/10W 1.5K	3	
R227	ERJ6GEYJ680	M.RESISTOR CH 1/10W 68	1	
R228	ERJ6GEYJ272	M.RESISTOR CH 1/10W 2.7K	1	
R229	ERJ6GEYJ102	M.RESISTOR CH 1/10W 1K	1	
R230	ERJ6GEYJ470	M.RESISTOR CH 1/10W 47	1	
R231	ERJ6GEYJ103	M.RESISTOR CH 1/10W 10K	1	
R232	ERJ6GEYJ470	M.RESISTOR CH 1/10W 47	1	
R233	ERJ6GEYJ103	M.RESISTOR CH 1/10W 10K	1	
R234	ERJ6GEYJ101	M.RESISTOR CH 1/10W 100	1	
R235	ERJ6GEYJ470	M.RESISTOR CH 1/10W 47	1	
R236	ERJ6GEYJ471	M.RESISTOR CH 1/10W 470	1	
R237	ERJ6GEYJ472	M.RESISTOR CH 1/10W 4.7K	1	
R238	ERJ6GEYJ470	M.RESISTOR CH 1/10W 47	1	
R239	ERJ6GEYJ222	M.RESISTOR CH 1/10W 2.2K	1	
R240	ERJ6GEYJ333	M.RESISTOR CH 1/10W 33K	1	
R241	ERJ6GEYJ472	M.RESISTOR CH 1/10W 4.7K	1	
R242-44	ERJ6GEYJ152	M.RESISTOR CH 1/10W 1.5K	3	
R245	ERJ6GEYJ680	M.RESISTOR CH 1/10W 68	1	
R246	ERJ6GEYJ272	M.RESISTOR CH 1/10W 2.7K	1	
R247	ERJ6GEYJ102	M.RESISTOR CH 1/10W 1K	1	
R248	ERJ6GEYJ470	M.RESISTOR CH 1/10W 47	1	
R249	ERJ6GEYJ103	M.RESISTOR CH 1/10W 10K	1	
R250	ERJ6GEYJ470	M.RESISTOR CH 1/10W 47	1	
R251	ERJ6GEYJ103	M.RESISTOR CH 1/10W 10K	1	
R252	ERJ6GEYJ121		1	
R253	ERJ6GEYJ470	M.RESISTOR CH 1/10W 47	1	
R254	ERJ6GEYJ471	M.RESISTOR CH 1/10W 470	1	
R255	ERJ6GEYJ472	M.RESISTOR CH 1/10W 4.7K	1	
R256	ERJ6GEYJ470	M.RESISTOR CH 1/10W 47	1	
R257	ERJ6GEYJ222	M.RESISTOR CH 1/10W 2.2K	1	
R258	ERJ6GEYJ333	M.RESISTOR CH 1/10W 33K	1	
R259	ERJ6GEYJ472	M.RESISTOR CH 1/10W 4.7K	1	
R260-62	ERJ6GEYJ152	M.RESISTOR CH 1/10W 1.5K	3	
R263	ERJ6GEYJ680	M.RESISTOR CH 1/10W 68	1	
R264	ERJ6GEYJ272	M.RESISTOR CH 1/10W 2.7K	1	
R265	ERJ6GEYJ102	M.RESISTOR CH 1/10W 1K	1	
R266	ERJ6GEYJ470	M.RESISTOR CH 1/10W 47	1	
R267	ERJ6GEYJ103	M.RESISTOR CH 1/10W 10K	1	
R268	ERJ6GEYJ470	M.RESISTOR CH 1/10W 47	1	
R269	ERJ6GEYJ103	M.RESISTOR CH 1/10W 10K	1	
R270	ERJ6GEYJ121	M.RESISTOR CH 1/10W 120	1	
R271	ERJ6GEYJ470	M.RESISTOR CH 1/10W 47	1	
R272	ERJ6GEYJ471	M.RESISTOR CH 1/10W 470	1	
R273,74	ERJ6GEYJ392	M.RESISTOR CH 1/10W 3.9K	2	
R275	ERJ6GEYJ222	M.RESISTOR CH 1/10W 2.2K	1	
R276,77	ERDS2TJ102	C.RESISTOR 1/4W 1K	2	
R278-81	ERJ6GEYJ470	M.RESISTOR CH 1/10W 47	4	
RY1-Y4	VSY2039	RELAY	4	
T1-T6	EIR7QE018B	TRANSFORMER	6	
T201,02	VLT0535	TRANSFORMER	2	
T203,04	VLT0536	TRANSFORMER	2	
TP1-P8	VJR0646	TEST POINT	8	
TP201-04	VJR0646	TEST POINT	4	

Ref.No.		Part No.	Part Name & Description	Pcs	Remarks
TPG1-G3		VJR0646	TEST POINT	3	
VC1-C4		VCV0031	TRIMMER	4	
VR3-R6		VRV0064B102	V.RESISTOR 1K	4	
			MISCELLANEOUS		
		VJF0004	HOLDER	2	
		VMP0972	P.C.B. ANGLE	1	
		VSC2340	SHIELD CASE	1	
		VSC2341	SHIELD CASE	1	
		VSC2342	SHIELD CASE	1	
		XTV3+6F	SCREW	2	
	■	VEP85015F	P.C.BOARD W/COMPONENT		FOR AU-63H
			RA & HA		
			CAPACITORS		
C201		ECUM1H103KBN	C.CAPACITOR CH 50V 0.01U	1	
C202		ECEA1EU100	E.CAPACITOR 25V 10U	1	
C203		ECUM1H103KBN	C.CAPACITOR CH 50V 0.01U	1	
C204		ECSF0JE106	T.CAPACITOR 6.3V 10U	1	
C205		ECUM1H103KBN	C.CAPACITOR CH 50V 0.01U	1	
C206		ECUM1E104ZFN	C.CAPACITOR CH 25V 0.1U	1	
C207		ECEA1CU470	E.CAPACITOR 16V 47U	1	
C208,09		ECUM1H103KBN	C.CAPACITOR CH 50V 0.01U	2	
C210		ECEA1EU100	E.CAPACITOR 25V 10U	1	
C211		ECUM1H103KBN	C.CAPACITOR CH 50V 0.01U	1	
C212		ECSF0JE106	T.CAPACITOR 6.3V 10U	1	
C213		ECUM1H103KBN	C.CAPACITOR CH 50V 0.01U	1	
C214		ECUM1E104ZFN	C.CAPACITOR CH 25V 0.1U	1	
C215		ECEA1CU470	E.CAPACITOR 16V 47U	1	
C216,17		ECUM1H103KBN	C.CAPACITOR CH 50V 0.01U	2	
C218		ECEA1EU100	E.CAPACITOR 25V 10U	1	
C219		ECUM1H103KBN	C.CAPACITOR CH 50V 0.01U	1	
C220		ECSF0JE106	T.CAPACITOR 6.3V 10U	1	
C221		ECUM1H103KBN	C.CAPACITOR CH 50V 0.01U	1	
C222		ECUM1E104ZFN	C.CAPACITOR CH 25V 0.1U	1	
C223		ECEA1CU470	E.CAPACITOR 16V 47U	1	
C224,25		ECUM1H103KBN	C.CAPACITOR CH 50V 0.01U	2	
C226		ECEA1EU100	E.CAPACITOR 25V 10U	1	
C227		ECUM1H103KBN	C.CAPACITOR CH 50V 0.01U	1	
C228		ECSF0JE106	T.CAPACITOR 6.3V 10U	1	
C229		ECUM1H103KBN	C.CAPACITOR CH 50V 0.01U	1	
C230		ECUM1E104ZFN	C.CAPACITOR CH 25V 0.1U	1	
C231		ECEA1CU470	E.CAPACITOR 16V 47U	1	
C232		ECUM1H103KBN	C.CAPACITOR CH 50V 0.01U	1	
C233,34		ECEA1CU470	E.CAPACITOR 16V 47U	2	
C235,36		ECUM1E104ZFN	C.CAPACITOR CH 25V 0.1U	2	
CN81		VJP3079	CONNECTOR (MALE)	1	
CN83		VJP1233T	CONNECTOR(MALE) 6P	1	
CN84		VJP1233G	CONNECTOR(MALE) 6P	1	
CN85		VJP1233T	CONNECTOR(MALE) 6P	1	
CN86		VJP1233G	CONNECTOR(MALE) 6P	1	

Ref.No.		Part No.	Part Name & Description	Pcs	Remarks
D201		MA151K	DIODE	1	
IC201-04		NJM592M8	IC	4	
IC205		AN78N09	IC	1	
L201-05		VLQEL05S101K	COIL 100UH	5	
Q201		2SC3757	TRANSISTOR	1	(Q,R)
Q202,03		2SK316	TRANSISTOR	2	(Q)
Q204,05		2SC3757	TRANSISTOR	2	(Q,R)
Q206,07		2SK316	TRANSISTOR	2	(Q)
Q208,09		2SC3757	TRANSISTOR	2	(Q,R)
Q210,11		2SK316	TRANSISTOR	2	(Q)
Q212,13		2SC3757	TRANSISTOR	2	(Q,R)
Q214,15		2SK316	TRANSISTOR	2	(Q)
Q216		2SC3757	TRANSISTOR	1	(Q,R)
Q217		2SD602	TRANSISTOR CHIP	1	(Q,R,S)
Q218		UN2213	TRANSISTOR-RESISTOR	1	
Q219		2SB643	TRANSISTOR	1	
Q220,21		2SD602	TRANSISTOR CHIP	2	(Q,R,S)
Q222-25		2SC3757	TRANSISTOR	4	(Q,R)
			RESISTORS		
R201		ERJ6GEYJ332	M.RESISTOR CH 1/10W 3.3K	1	
R202		ERJ6GEYJ470	M.RESISTOR CH 1/10W 47	1	
R203		ERJ6GEYJ222	M.RESISTOR CH 1/10W 2.2K	1	
R204		ERJ6GEYG223	M.RESISTOR CH 1/10W 22K	1	
R205		ERJ6GEYJ472	M.RESISTOR CH 1/10W 4.7K	1	
R206-08		ERJ6GEYJ152	M.RESISTOR CH 1/10W 1.5K	3	
R209		ERJ6GEYJ680	M.RESISTOR CH 1/10W 68	1	
R210		ERJ6GEYJ272	M.RESISTOR CH 1/10W 2.7K	1	
R211		ERJ6GEYJ102	M.RESISTOR CH 1/10W 1K	1	
R212		ERJ6GEYJ470	M.RESISTOR CH 1/10W 47	1	
R213		ERJ6GEYJ103	M.RESISTOR CH 1/10W 10K	1	
R214		ERJ6GEYJ470	M.RESISTOR CH 1/10W 47	1	
R215		ERJ6GEYJ103	M.RESISTOR CH 1/10W 10K	1	
R216		ERJ6GEYJ820	M.RESISTOR CH 1/10W 82	1	
R217		ERJ6GEYJ470	M.RESISTOR CH 1/10W 47	1	
R218		ERJ6GEYJ471	M.RESISTOR CH 1/10W 470	1	
R219		ERJ6GEYJ332	M.RESISTOR CH 1/10W 3.3K	1	
R220		ERJ6GEYJ470	M.RESISTOR CH 1/10W 47	1	
R221		ERJ6GEYJ222	M.RESISTOR CH 1/10W 2.2K	1	
R222		ERJ6GEYG223	M.RESISTOR CH 1/10W 22K	1	
R223		ERJ6GEYJ472	M.RESISTOR CH 1/10W 4.7K	1	
R224-26		ERJ6GEYJ152	M.RESISTOR CH 1/10W 1.5K	3	
R227		ERJ6GEYJ680	M.RESISTOR CH 1/10W 68	1	
R228		ERJ6GEYJ272	M.RESISTOR CH 1/10W 2.7K	1	
R229		ERJ6GEYJ102	M.RESISTOR CH 1/10W 1K	1	
R230		ERJ6GEYJ470	M.RESISTOR CH 1/10W 47	1	
R231		ERJ6GEYJ103	M.RESISTOR CH 1/10W 10K	1	
R232		ERJ6GEYJ470	M.RESISTOR CH 1/10W 47	1	
R233		ERJ6GEYJ103	M.RESISTOR CH 1/10W 10K	1	
R234		ERJ6GEYJ820	M.RESISTOR CH 1/10W 82	1	
R235		ERJ6GEYJ470	M.RESISTOR CH 1/10W 47	1	
R236		ERJ6GEYJ471	M.RESISTOR CH 1/10W 470	1	
R237		ERJ6GEYJ472	M.RESISTOR CH 1/10W 4.7K	1	
R238		ERJ6GEYJ470	M.RESISTOR CH 1/10W 47	1	
R239		ERJ6GEYJ222	M.RESISTOR CH 1/10W 2.2K	1	
R240		ERJ6GEYJ333	M.RESISTOR CH 1/10W 33K	1	
R241		ERJ6GEYJ472	M.RESISTOR CH 1/10W 4.7K	1	
R242-44		ERJ6GEYJ152	M.RESISTOR CH 1/10W 1.5K	3	
R245		ERJ6GEYJ680	M.RESISTOR CH 1/10W 68	1	
R246		ERJ6GEYJ272	M.RESISTOR CH 1/10W 2.7K	1	
R247		ERJ6GEYJ102	M.RESISTOR CH 1/10W 1K	1	
R248		ERJ6GEYJ470	M.RESISTOR CH 1/10W 47	1	
R249		ERJ6GEYJ103	M.RESISTOR CH 1/10W 10K	1	

Ref.No.		Part No.	Part Name & Description	Pcs	Remarks
R250		ERJ6GEYJ470	M.RESISTOR CH 1/10W 47	1	
R251		ERJ6GEYJ103	M.RESISTOR CH 1/10W 10K	1	
R252		ERJ6GEYJ101	M.RESISTOR CH 1/10W 100	1	
R253		ERJ6GEYJ470	M.RESISTOR CH 1/10W 47	1	
R254		ERJ6GEYJ471	M.RESISTOR CH 1/10W 470	1	
R255		ERJ6GEYJ472	M.RESISTOR CH 1/10W 4.7K	1	
R256		ERJ6GEYJ470	M.RESISTOR CH 1/10W 47	1	
R257		ERJ6GEYJ222	M.RESISTOR CH 1/10W 2.2K	1	
R258		ERJ6GEYJ333	M.RESISTOR CH 1/10W 33K	1	
R259		ERJ6GEYJ472	M.RESISTOR CH 1/10W 4.7K	1	
R260-62		ERJ6GEYJ152	M.RESISTOR CH 1/10W 1.5K	3	
R263		ERJ6GEYJ680	M.RESISTOR CH 1/10W 68	1	
R264		ERJ6GEYJ272	M.RESISTOR CH 1/10W 2.7K	1	
R265		ERJ6GEYJ102	M.RESISTOR CH 1/10W 1K	1	
R266		ERJ6GEYJ470	M.RESISTOR CH 1/10W 47	1	
R267		ERJ6GEYJ103	M.RESISTOR CH 1/10W 10K	1	
R268		ERJ6GEYJ470	M.RESISTOR CH 1/10W 47	1	
R269		ERJ6GEYJ103	M.RESISTOR CH 1/10W 10K	1	
R270		ERJ6GEYJ101	M.RESISTOR CH 1/10W 100	1	
R271		ERJ6GEYJ470	M.RESISTOR CH 1/10W 47	1	
R272		ERJ6GEYJ471	M.RESISTOR CH 1/10W 470	1	
R273,74		ERJ6GEYJ392	M.RESISTOR CH 1/10W 3.9K	2	
R275		ERJ6GEYJ222	M.RESISTOR CH 1/10W 2.2K	1	
R276,77		ERDS2TJ102	C.RESISTOR 1/4W 1K	2	
R278-81		ERJ6GEYJ470	M.RESISTOR CH 1/10W 47	4	
RY1-Y4		VSY2039	RELAY	4	
T201,02		VLT0535	TRANSFORMER	2	
T203,04		VLT0536	TRANSFORMER	2	
TP201-04		VJR0646	TEST POINT	4	
			MISCELLANEOUS		
		VJF0004	HOLDER	2	
		VMP0972	P.C.B. ANGLE	1	
		VSC2340	SHIELD CASE	1	
		VSC2341	SHIELD CASE	1	
		VSC2342	SHIELD CASE	1	
		XTV3+6F	SCREW	2	
	■	VEP85015E	P.C.BOARD W/COMPONENT		FOR AU-62H
			RA & HA		
			CAPACITORS		
C201		ECUM1H103KBN	C.CAPACITOR CH 50V 0.01U	1	
C202		ECEA1EU100	E.CAPACITOR 25V 10U	1	
C203		ECUM1H103KBN	C.CAPACITOR CH 50V 0.01U	1	
C204		ECSF0JE106	T.CAPACITOR 6.3V 10U	1	
C205		ECUM1H103KBN	C.CAPACITOR CH 50V 0.01U	1	
C206		ECUM1E104ZFN	C.CAPACITOR CH 25V 0.1U	1	
C207		ECEA1CU470	E.CAPACITOR 16V 47U	1	
C208,09		ECUM1H103KBN	C.CAPACITOR CH 50V 0.01U	2	
C210		ECEA1EU100	E.CAPACITOR 25V 10U	1	
C211		ECUM1H103KBN	C.CAPACITOR CH 50V 0.01U	1	
C212		ECSF0JE106	T.CAPACITOR 6.3V 10U	1	
C213		ECUM1H103KBN	C.CAPACITOR CH 50V 0.01U	1	
C214		ECUM1E104ZFN	C.CAPACITOR CH 25V 0.1U	1	

Ref.No.		Part No.	Part Name & Description	Pcs	Remarks
C215		ECEA1CU470	E.CAPACITOR 16V 47U	1	
C216,17		ECUM1H103KBN	C.CAPACITOR CH 50V 0.01U	2	
C218		ECEA1EU100	E.CAPACITOR 25V 10U	1	
C219		ECUM1H103KBN	C.CAPACITOR CH 50V 0.01U	1	
C220		ECSF0JE106	T.CAPACITOR 6.3V 10U	1	
C221		ECUM1H103KBN	C.CAPACITOR CH 50V 0.01U	1	
C222		ECUM1E104ZFN	C.CAPACITOR CH 25V 0.1U	1	
C223		ECEA1CU470	E.CAPACITOR 16V 47U	1	
C224,25		ECUM1H103KBN	C.CAPACITOR CH 50V 0.01U	2	
C226		ECEA1EU100	E.CAPACITOR 25V 10U	1	
C227		ECUM1H103KBN	C.CAPACITOR CH 50V 0.01U	1	
C228		ECSF0JE106	T.CAPACITOR 6.3V 10U	1	
C229		ECUM1H103KBN	C.CAPACITOR CH 50V 0.01U	1	
C230		ECUM1E104ZFN	C.CAPACITOR CH 25V 0.1U	1	
C231		ECEA1CU470	E.CAPACITOR 16V 47U	1	
C232		ECUM1H103KBN	C.CAPACITOR CH 50V 0.01U	1	
C233,34		ECEA1CU470	E.CAPACITOR 16V 47U	2	
C235,36		ECUM1E104ZFN	C.CAPACITOR CH 25V 0.1U	2	
CN81		VJP3079	CONNECTOR (MALE)	1	
CN83		VJP1233T	CONNECTOR(MALE) 6P	1	
CN84		VJP1233G	CONNECTOR(MALE) 6P	1	
CN85		VJP1233T	CONNECTOR(MALE) 6P	1	
CN86		VJP1233G	CONNECTOR(MALE) 6P	1	
D201		MA151K	DIODE	1	
IC201-04		NJM592M8	IC	4	
IC205		AN78N09	IC	1	
L201-05		VLQEL05S101K	COIL 100UH	5	
Q201		2SC3757	TRANSISTOR	1	(Q,R)
Q202,03		2SK316	TRANSISTOR	2	(Q)
Q204,05		2SC3757	TRANSISTOR	2	(Q,R)
Q206,07		2SK316	TRANSISTOR	2	(Q)
Q208,09		2SC3757	TRANSISTOR	2	(Q,R)
Q210,11		2SK316	TRANSISTOR	2	(Q)
Q212,13		2SC3757	TRANSISTOR	2	(Q,R)
Q214,15		2SK316	TRANSISTOR	2	(Q)
Q216		2SC3757	TRANSISTOR	1	(Q,R)
Q217		2SD602	TRANSISTOR CHIP	1	(Q,R,S)
Q218		UN2213	TRANSISTOR-RESISTOR	1	
Q219		2SB643	TRANSISTOR	1	
Q220,21		2SD602	TRANSISTOR CHIP	2	(Q,R,S)
Q222-25		2SC3757	TRANSISTOR	4	(Q,R)
			RESISTORS		
R201		ERJ6GEYJ332	M.RESISTOR CH 1/10W 3.3K	1	
R202		ERJ6GEYJ470	M.RESISTOR CH 1/10W 47	1	
R203		ERJ6GEYJ222	M.RESISTOR CH 1/10W 2.2K	1	
R204		ERJ6GEYG223	M.RESISTOR CH 1/10W 22K	1	
R205		ERJ6GEYJ472	M.RESISTOR CH 1/10W 4.7K	1	
R206-08		ERJ6GEYJ152	M.RESISTOR CH 1/10W 1.5K	3	
R209		ERJ6GEYJ680	M.RESISTOR CH 1/10W 68	1	
R210		ERJ6GEYJ272	M.RESISTOR CH 1/10W 2.7K	1	
R211		ERJ6GEYJ102	M.RESISTOR CH 1/10W 1K	1	
R212		ERJ6GEYJ470	M.RESISTOR CH 1/10W 47	1	
R213		ERJ6GEYJ103	M.RESISTOR CH 1/10W 10K	1	
R214		ERJ6GEYJ470	M.RESISTOR CH 1/10W 47	1	
R215		ERJ6GEYJ103	M.RESISTOR CH 1/10W 10K	1	
R216		ERJ6GEYJ820	M.RESISTOR CH 1/10W 82	1	
R217		ERJ6GEYJ470	M.RESISTOR CH 1/10W 47	1	

Ref.No.		Part No.	Part Name & Description	Pcs	Remarks
R218		ERJ6GEYJ471	M.RESISTOR CH 1/10W 470	1	
R219		ERJ6GEYJ332	M.RESISTOR CH 1/10W 3.3K	1	
R220		ERJ6GEYJ470	M.RESISTOR CH 1/10W 47	1	
R221		ERJ6GEYJ222	M.RESISTOR CH 1/10W 2.2K	1	
R222		ERJ6GEYG223	M.RESISTOR CH 1/10W 22K	1	
R223		ERJ6GEYJ472	M.RESISTOR CH 1/10W 4.7K	1	
R224-26		ERJ6GEYJ152	M.RESISTOR CH 1/10W 1.5K	3	
R227		ERJ6GEYJ680	M.RESISTOR CH 1/10W 68	1	
R228		ERJ6GEYJ272	M.RESISTOR CH 1/10W 2.7K	1	
R229		ERJ6GEYJ102	M.RESISTOR CH 1/10W 1K	1	
R230		ERJ6GEYJ470	M.RESISTOR CH 1/10W 47	1	
R231		ERJ6GEYJ103	M.RESISTOR CH 1/10W 10K	1	
R232		ERJ6GEYJ470	M.RESISTOR CH 1/10W 47	1	
R233		ERJ6GEYJ103	M.RESISTOR CH 1/10W 10K	1	
R234		ERJ6GEYJ820	M.RESISTOR CH 1/10W 82	1	
R235		ERJ6GEYJ470	M.RESISTOR CH 1/10W 47	1	
R236		ERJ6GEYJ471	M.RESISTOR CH 1/10W 470	1	
R237		ERJ6GEYJ472	M.RESISTOR CH 1/10W 4.7K	1	
R238		ERJ6GEYJ470	M.RESISTOR CH 1/10W 47	1	
R239		ERJ6GEYJ222	M.RESISTOR CH 1/10W 2.2K	1	
R240		ERJ6GEYJ333	M.RESISTOR CH 1/10W 33K	1	
R241		ERJ6GEYJ472	M.RESISTOR CH 1/10W 4.7K	1	
R242-44		ERJ6GEYJ152	M.RESISTOR CH 1/10W 1.5K	3	
R245		ERJ6GEYJ680	M.RESISTOR CH 1/10W 68	1	
R246		ERJ6GEYJ272	M.RESISTOR CH 1/10W 2.7K	1	
R247		ERJ6GEYJ102	M.RESISTOR CH 1/10W 1K	1	
R248		ERJ6GEYJ470	M.RESISTOR CH 1/10W 47	1	
R249		ERJ6GEYJ103	M.RESISTOR CH 1/10W 10K	1	
R250		ERJ6GEYJ470	M.RESISTOR CH 1/10W 47	1	
R251		ERJ6GEYJ103	M.RESISTOR CH 1/10W 10K	1	
R252		ERJ6GEYJ101	M.RESISTOR CH 1/10W 100	1	
R253		ERJ6GEYJ470	M.RESISTOR CH 1/10W 47	1	
R254		ERJ6GEYJ471	M.RESISTOR CH 1/10W 470	1	
R255		ERJ6GEYJ472	M.RESISTOR CH 1/10W 4.7K	1	
R256		ERJ6GEYJ470	M.RESISTOR CH 1/10W 47	1	
R257		ERJ6GEYJ222	M.RESISTOR CH 1/10W 2.2K	1	
R258		ERJ6GEYJ333	M.RESISTOR CH 1/10W 33K	1	
R259		ERJ6GEYJ472	M.RESISTOR CH 1/10W 4.7K	1	
R260-62		ERJ6GEYJ152	M.RESISTOR CH 1/10W 1.5K	3	
R263		ERJ6GEYJ680	M.RESISTOR CH 1/10W 68	1	
R264		ERJ6GEYJ272	M.RESISTOR CH 1/10W 2.7K	1	
R265		ERJ6GEYJ102	M.RESISTOR CH 1/10W 1K	1	
R266		ERJ6GEYJ470	M.RESISTOR CH 1/10W 47	1	
R267		ERJ6GEYJ103	M.RESISTOR CH 1/10W 10K	1	
R268		ERJ6GEYJ470	M.RESISTOR CH 1/10W 47	1	
R269		ERJ6GEYJ103	M.RESISTOR CH 1/10W 10K	1	
R270		ERJ6GEYJ101	M.RESISTOR CH 1/10W 100	1	
R271		ERJ6GEYJ470	M.RESISTOR CH 1/10W 47	1	
R272		ERJ6GEYJ471	M.RESISTOR CH 1/10W 470	1	
R273,74		ERJ6GEYJ392	M.RESISTOR CH 1/10W 3.9K	2	
R275		ERJ6GEYJ222	M.RESISTOR CH 1/10W 2.2K	1	
R276,77		ERDS2TJ102	C.RESISTOR 1/4W 1K	2	
R278-81		ERJ6GEYJ470	M.RESISTOR CH 1/10W 47	4	
RY1-Y4		VSY2039	RELAY	4	
T201,02		VLT0535	TRANSFORMER	2	
T203,04		VLT0536	TRANSFORMER	2	
TP201-04		VJR0646	TEST POINT	4	
			MISCELLANEOUS		
		VJP0004	HOLDER	2	
		VMP0972	P.C.B. ANGLE	1	
		VSC2340	SHIELD CASE	1	
		VSC2341	SHIELD CASE	1	
		VSC2342	SHIELD CASE	1	

Ref.No.		Part No.	Part Name & Description	Pcs	Remarks
		XTV3+6F	SCREW	2	
	■	VEP00E27C	P.C.BOARD W/COMPONENT		FOR AU-65H,AU-63H
			TR SENSOR (1)		AU-62H
			MISCELLANEOUS		
		ON1110	PHOTO TRNSISTOR		
	■	VEP00E28C	P.C.BOARD W/COMPONENT		FOR AU-65H,AU-63H
			TR SENSOR (2)		AU-62H
			MISCELLANEOUS		
		ON1110	PHOTO TRNSISTOR		
	■	VEP00E25C	P.C.BOARD W/COMPONENT		FOR AU-65H,AU-63H
			UNLOADING PHOTO		AU-62H
			MISCELLANEOUS		
		ON1110	PHOTO TRNSISTOR		
	■	VEP83174C	P.C.BOARD W/COMPONENT		FOR AU-65H
			VIDEO IN/OUT		
			CAPACITORS		
C1		ECUM1H103KBN	C.CAPACITOR CH 50V 0.01U	1	
C2		ECEA1CKG470	E.CAPACITOR 16V 47U	1	
C3		ECUM1H103KBN	C.CAPACITOR CH 50V 0.01U	1	
C4		ECEA1CKG470	E.CAPACITOR 16V 47U	1	
C5-C8		ECUM1H103KBN	C.CAPACITOR CH 50V 0.01U	4	
C10		ECUM1E104ZFN	C.CAPACITOR CH 25V 0.1U	1	
C81		ECUM1C104KBN	C.CAPACITOR CH 16V 0.1U	1	
C101		ECEA1CKG470	E.CAPACITOR 16V 47U	1	
C102		ECUM1H103KBN	C.CAPACITOR CH 50V 0.01U	1	
C103		ECEA1CU101	E.CAPACITOR 16V 100U	1	
C104		ECUM1H103KBN	C.CAPACITOR CH 50V 0.01U	1	
C105		ECUM1H101JCN	C.CAPACITOR CH 50V 100P	1	
C106,07		ECUM1H270JCN	C.CAPACITOR CH 50V 27P	2	
C108		ECUM1H101JCN	C.CAPACITOR CH 50V 100P	1	
C109		ECUM1H270JCN	C.CAPACITOR CH 50V 27P	1	
C110		ECUM1H101JCN	C.CAPACITOR CH 50V 100P	1	
C111		ECUM1H270JCN	C.CAPACITOR CH 50V 27P	1	
C112		ECUM1H103KBN	C.CAPACITOR CH 50V 0.01U	1	
C113		ECUM1H101JCN	C.CAPACITOR CH 50V 100P	1	
C114		ECUM1H270JCN	C.CAPACITOR CH 50V 27P	1	
C115		ECEA1CKG470	E.CAPACITOR 16V 47U	1	
C116		ECUM1H103KBN	C.CAPACITOR CH 50V 0.01U	1	
C117		ECEA1CU101	E.CAPACITOR 16V 100U	1	

Ref.No.		Part No.	Part Name & Description	Pcs	Remarks
C118		ECUM1H103KBN	C.CAPACITOR CH 50V 0.01U	1	
C119		ECUM1H101JCN	C.CAPACITOR CH 50V 100P	1	
C120		ECUM1H270JCN	C.CAPACITOR CH 50V 27P	1	
C121		ECUM1H101JCN	C.CAPACITOR CH 50V 100P	1	
C122		ECUM1H270JCN	C.CAPACITOR CH 50V 27P	1	
C123		ECUM1H101JCN	C.CAPACITOR CH 50V 100P	1	
C124		ECUM1H270JCN	C.CAPACITOR CH 50V 27P	1	
C125-36		ECUM1E104ZFN	C.CAPACITOR CH 25V 0.1U	12	
C181		ECUM1C104KBN	C.CAPACITOR CH 16V 0.1U	1	
C182,83		ECUM1E104ZFN	C.CAPACITOR CH 25V 0.1U	2	
CN250		VJP1879T	CONNECTOR(MALE)	1	
CN251,52		VJP1881T	CONNECTOR(MALE)	2	
CN253		VJP1876T	CONNECTOR(MALE)	1	
CN254		VJP1874T	CONNECTOR (MALE)	1	
D1-D3		MA151WK	DIODE	3	
D4		MA151K	DIODE	1	
D101-07		MA3130-L	DIODE	7	
IC101		AN78N09	IC	1	
IC102		AN79N09	IC	1	
L1,L2		VLQEL05S101K	COIL 100UH	2	
P1		VJP1875T	CONNECTOR(MALE)	1	
P3		VJP1875T	CONNECTOR(MALE)	1	
Q1-Q7		2SA1226	TRANSISTOR	7	
Q81		UN2213	TRANSISTOR-RESISTOR	1	
Q101		2SB709-R	TRANSISTOR CHIP	1	(Q,R)
Q102,03		2SD601-R	TRANSISTOR CHIP	2	(Q,R)
Q104		2SB709-R	TRANSISTOR CHIP	1	(Q,R)
Q105,06		2SD601-R	TRANSISTOR CHIP	2	(Q,R)
Q107		2SB709-R	TRANSISTOR CHIP	1	(Q,R)
Q108,09		2SD601-R	TRANSISTOR CHIP	2	(Q,R)
Q110		2SB709-R	TRANSISTOR CHIP	1	(Q,R)
Q111,12		2SD601-R	TRANSISTOR CHIP	2	(Q,R)
Q113		2SB709-R	TRANSISTOR CHIP	1	(Q,R)
Q114,15		2SD601-R	TRANSISTOR CHIP	2	(Q,R)
Q116		2SB709-R	TRANSISTOR CHIP	1	(Q,R)
Q117,18		2SD601-R	TRANSISTOR CHIP	2	(Q,R)
Q119		2SB709-R	TRANSISTOR CHIP	1	(Q,R)
Q120,21		2SD601-R	TRANSISTOR CHIP	2	(Q,R)
Q181		UN2112	TRANSISTOR-RESISTOR	1	
Q182		2SD601-R	TRANSISTOR CHIP	1	(Q,R)
			RESISTORS		
R1,R2		VRE0034E151	M.RESISTOR CH 1/10W 150	2	
R3		ERJ6GEYJ101	M.RESISTOR CH 1/10W 100	1	
R4,R5		ERJ6GEYJ152	M.RESISTOR CH 1/10W 1.5K	2	
R6		ERJ6GEYJ330	M.RESISTOR CH 1/10W 33	1	
R7		ERJ6GEYJ104	M.RESISTOR CH 1/10W 100K	1	
R8,R9		VRE0034E151	M.RESISTOR CH 1/10W 150	2	
R10		ERJ6GEYJ101	M.RESISTOR CH 1/10W 100	1	
R11,12		ERJ6GEYJ152	M.RESISTOR CH 1/10W 1.5K	2	
R13		ERJ6GEYJ330	M.RESISTOR CH 1/10W 33	1	
R14		ERJ6GEYJ104	M.RESISTOR CH 1/10W 100K	1	
R15,16		VRE0034E151	M.RESISTOR CH 1/10W 150	2	
R17		ERJ6GEYJ101	M.RESISTOR CH 1/10W 100	1	
R18		ERJ6GEYJ122	M.RESISTOR CH 1/10W 1.2K	1	

Ref.No.		Part No.	Part Name & Description	Pcs	Remarks
R19		ERJ6GEYJ330	M.RESISTOR CH 1/10W 33	1	
R20,21		VRE0034E151	M.RESISTOR CH 1/10W 150	2	
R22		ERJ6GEYJ101	M.RESISTOR CH 1/10W 100	1	
R23		ERJ6GEYJ122	M.RESISTOR CH 1/10W 1.2K	1	
R24		ERJ6GEYJ330	M.RESISTOR CH 1/10W 33	1	
R25,26		VRE0034E151	M.RESISTOR CH 1/10W 150	2	
R27		ERJ6GEYJ101	M.RESISTOR CH 1/10W 100	1	
R28,29		ERJ6GEYJ152	M.RESISTOR CH 1/10W 1.5K	2	
R30		ERJ6GEYJ330	M.RESISTOR CH 1/10W 33	1	
R31		ERJ6GEYJ101	M.RESISTOR CH 1/10W 100	1	
R32,33		ERJ6GEYJ152	M.RESISTOR CH 1/10W 1.5K	2	
R34		ERJ6GEYJ330	M.RESISTOR CH 1/10W 33	1	
R35		ERJ6GEYJ101	M.RESISTOR CH 1/10W 100	1	
R36,37		ERJ6GEYJ152	M.RESISTOR CH 1/10W 1.5K	2	
R38		ERJ6GEYJ330	M.RESISTOR CH 1/10W 33	1	
R39		VRE0034E151	M.RESISTOR CH 1/10W 150	1	
R40		VRE0034E64X	M.RESISTOR 1/10W	1	
R41		VRE0034E151	M.RESISTOR CH 1/10W 150	1	
R42		VRE0034E64X	M.RESISTOR 1/10W	1	
R43,44		VRE0034E03A	M.RESISTOR 1/10W	2	
R51,52		ERJ6GEY0R00	M.RESISTOR CH 1/10W 0	2	
R81		ERJ6GEYJ393	M.RESISTOR CH 1/10W 39K	1	
R101,02		ERJ6GEYJ222	M.RESISTOR CH 1/10W 2.2K	2	
R103		ERJ6GEYJ470	M.RESISTOR CH 1/10W 47	1	
R104		ERJ6GEYJ222	M.RESISTOR CH 1/10W 2.2K	1	
R105,06		ERJ6GEYJ151	M.RESISTOR CH 1/10W 150	2	
R107		VRE0034E750	M.RESISTOR CH 1/10W 75	1	
R108,09		ERJ6GEYJ332	M.RESISTOR CH 1/10W 3.3K	2	
R110		VRE0034E750	M.RESISTOR CH 1/10W 75	1	
R111,12		ERJ6GEYJ222	M.RESISTOR CH 1/10W 2.2K	2	
R113		ERJ6GEYJ470	M.RESISTOR CH 1/10W 47	1	
R114		ERJ6GEYJ222	M.RESISTOR CH 1/10W 2.2K	1	
R115,16		ERJ6GEYJ151	M.RESISTOR CH 1/10W 150	2	
R117		VRE0034E750	M.RESISTOR CH 1/10W 75	1	
R118		ERJ6GEYJ332	M.RESISTOR CH 1/10W 3.3K	1	
R119,20		ERJ6GEYJ222	M.RESISTOR CH 1/10W 2.2K	2	
R121		ERJ6GEYJ470	M.RESISTOR CH 1/10W 47	1	
R122		ERJ6GEYJ222	M.RESISTOR CH 1/10W 2.2K	1	
R123,24		ERJ6GEYJ151	M.RESISTOR CH 1/10W 150	2	
R125		VRE0034E750	M.RESISTOR CH 1/10W 75	1	
R126		ERJ6GEYJ332	M.RESISTOR CH 1/10W 3.3K	1	
R127-29		ERJ6GEYJ222	M.RESISTOR CH 1/10W 2.2K	3	
R130,31		ERJ6GEYJ221	M.RESISTOR CH 1/10W 220	2	
R132		VRE0034E750	M.RESISTOR CH 1/10W 75	1	
R133-35		ERJ6GEYJ222	M.RESISTOR CH 1/10W 2.2K	3	
R136		ERJ6GEYJ470	M.RESISTOR CH 1/10W 47	1	
R137		ERJ6GEYJ222	M.RESISTOR CH 1/10W 2.2K	1	
R138,39		ERJ6GEYJ221	M.RESISTOR CH 1/10W 220	2	
R140		VRE0034E750	M.RESISTOR CH 1/10W 75	1	
R141-43		ERJ6GEYJ222	M.RESISTOR CH 1/10W 2.2K	3	
R144		ERJ6GEYJ470	M.RESISTOR CH 1/10W 47	1	
R145		ERJ6GEYJ222	M.RESISTOR CH 1/10W 2.2K	1	
R146,47		ERJ6GEYJ221	M.RESISTOR CH 1/10W 220	2	
R148		VRE0034E750	M.RESISTOR CH 1/10W 75	1	
R149-51		ERJ6GEYJ222	M.RESISTOR CH 1/10W 2.2K	3	
R152		ERJ6GEYJ470	M.RESISTOR CH 1/10W 47	1	
R153		ERJ6GEYJ222	M.RESISTOR CH 1/10W 2.2K	1	
R154,55		ERJ6GEYJ221	M.RESISTOR CH 1/10W 220	2	
R156		VRE0034E750	M.RESISTOR CH 1/10W 75	1	
R157		ERJ6GEYJ222	M.RESISTOR CH 1/10W 2.2K	1	
R158		ERJ6GEYJ470	M.RESISTOR CH 1/10W 47	1	
R181		ERJ6GEYJ682	M.RESISTOR CH 1/10W 6.8K	1	
R182,83		ERJ6GEYJ103	M.RESISTOR CH 1/10W 10K	2	
R184		ERJ6GEYJ105	M.RESISTOR CH 1/10W 1M	1	
SW1,W2		VSS0307	SWITCH	2	
	■	VEP83174B	P.C.BOARD W/COMPONENT		FOR AU-63H,AU-62H
			VIDEO IN/OUT		

Ref.No.		Part No.	Part Name & Description	Pcs	Remarks
			CAPACITORS		
C2		ECEA1CKG470	E.CAPACITOR 16V 47U	1	
C3		ECUM1H103KBN	C.CAPACITOR CH 50V 0.01U	1	
C4		ECEA1CKG470	E.CAPACITOR 16V 47U	1	
C101		ECEA1CKG470	E.CAPACITOR 16V 47U	1	
C102		ECUM1H103KBN	C.CAPACITOR CH 50V 0.01U	1	
C103		ECEA1CU101	E.CAPACITOR 16V 100U	1	
C104		ECUM1H103KBN	C.CAPACITOR CH 50V 0.01U	1	
C105		ECUM1H101JCN	C.CAPACITOR CH 50V 100P	1	
C106,07		ECUM1H270JCN	C.CAPACITOR CH 50V 27P	2	
C108		ECUM1H101JCN	C.CAPACITOR CH 50V 100P	1	
C109		ECUM1H270JCN	C.CAPACITOR CH 50V 27P	1	
C110		ECUM1H101JCN	C.CAPACITOR CH 50V 100P	1	
C111		ECUM1H270JCN	C.CAPACITOR CH 50V 27P	1	
C112		ECUM1H103KBN	C.CAPACITOR CH 50V 0.01U	1	
C113		ECUM1H101JCN	C.CAPACITOR CH 50V 100P	1	
C114		ECUM1H270JCN	C.CAPACITOR CH 50V 27P	1	
C115		ECEA1CKG470	E.CAPACITOR 16V 47U	1	
C116		ECUM1H103KBN	C.CAPACITOR CH 50V 0.01U	1	
C117		ECEA1CU101	E.CAPACITOR 16V 100U	1	
C118		ECUM1H103KBN	C.CAPACITOR CH 50V 0.01U	1	
C119		ECUM1H101JCN	C.CAPACITOR CH 50V 100P	1	
C120		ECUM1H270JCN	C.CAPACITOR CH 50V 27P	1	
C121		ECUM1H101JCN	C.CAPACITOR CH 50V 100P	1	
C122		ECUM1H270JCN	C.CAPACITOR CH 50V 27P	1	
C123		ECUM1H101JCN	C.CAPACITOR CH 50V 100P	1	
C124		ECUM1H270JCN	C.CAPACITOR CH 50V 27P	1	
C125-36		ECUM1E104ZFN	C.CAPACITOR CH 25V 0.1U	12	
C181		ECUM1C104KBN	C.CAPACITOR CH 16V 0.1U	1	
C182,83		ECUM1E104ZFN	C.CAPACITOR CH 25V 0.1U	2	
CN250		VJP1879T	CONNECTOR(MALE)	1	
CN251,52		VJP1881T	CONNECTOR(MALE)	2	
CN253		VJP1876T	CONNECTOR(MALE)	1	
CN254		VJP1875T	CONNECTOR(MALE)	1	
D1		MA151WK	DIODE	1	
D101-07		MA3130-L	DIODE	7	
IC101		AN78N09	IC	1	
IC102		AN79N09	IC	1	
L1,L2		VLQEL05S101K	COIL 100UH	2	
P3		VJP1875T	CONNECTOR(MALE)	1	
Q2		2SA1226	TRANSISTOR	1	
Q101		2SB709-R	TRANSISTOR CHIP	1	(Q,R)
Q102,03		2SD601-R	TRANSISTOR CHIP	2	(Q,R)
Q104		2SB709-R	TRANSISTOR CHIP	1	(Q,R)
Q105,06		2SD601-R	TRANSISTOR CHIP	2	(Q,R)
Q107		2SB709-R	TRANSISTOR CHIP	1	(Q,R)
Q108,09		2SD601-R	TRANSISTOR CHIP	2	(Q,R)
Q110		2SB709-R	TRANSISTOR CHIP	1	(Q,R)
Q111,12		2SD601-R	TRANSISTOR CHIP	2	(Q,R)
Q113		2SB709-R	TRANSISTOR CHIP	1	(Q,R)
Q114,15		2SD601-R	TRANSISTOR CHIP	2	(Q,R)

Ref.No.		Part No.	Part Name & Description	Pcs	Remarks
Q116		2SB709-R	TRANSISTOR CHIP	1	(Q,R)
Q117,18		2SD601-R	TRANSISTOR CHIP	2	(Q,R)
Q119		2SB709-R	TRANSISTOR CHIP	1	(Q,R)
Q120,21		2SD601-R	TRANSISTOR CHIP	2	(Q,R)
Q181		UN2112	TRANSISTOR-RESISTOR	1	
Q182		2SD601-R	TRANSISTOR CHIP	1	(Q,R)
			RESISTORS		
R8,R9		VRE0034E151	M.RESISTOR CH 1/10W 150	2	
R10		ERJ6GEYJ101	M.RESISTOR CH 1/10W 100	1	
R11,12		ERJ6GEYJ152	M.RESISTOR CH 1/10W 1.5K	2	
R13		ERJ6GEYJ330	M.RESISTOR CH 1/10W 33	1	
R14		ERJ6GEYJ104	M.RESISTOR CH 1/10W 100K	1	
R101,02		ERJ6GEYJ222	M.RESISTOR CH 1/10W 2.2K	2	
R103		ERJ6GEYJ470	M.RESISTOR CH 1/10W 47	1	
R104		ERJ6GEYJ222	M.RESISTOR CH 1/10W 2.2K	1	
R105,06		ERJ6GEYJ151	M.RESISTOR CH 1/10W 150	2	
R107		VRE0034E750	M.RESISTOR CH 1/10W 75	1	
R108,09		ERJ6GEYJ332	M.RESISTOR CH 1/10W 3.3K	2	
R110		VRE0034E750	M.RESISTOR CH 1/10W 75	1	
R111,12		ERJ6GEYJ222	M.RESISTOR CH 1/10W 2.2K	2	
R113		ERJ6GEYJ470	M.RESISTOR CH 1/10W 47	1	
R114		ERJ6GEYJ222	M.RESISTOR CH 1/10W 2.2K	1	
R115,16		ERJ6GEYJ151	M.RESISTOR CH 1/10W 150	2	
R117		VRE0034E750	M.RESISTOR CH 1/10W 75	1	
R118		ERJ6GEYJ332	M.RESISTOR CH 1/10W 3.3K	1	
R119,20		ERJ6GEYJ222	M.RESISTOR CH 1/10W 2.2K	2	
R121		ERJ6GEYJ470	M.RESISTOR CH 1/10W 47	1	
R122		ERJ6GEYJ222	M.RESISTOR CH 1/10W 2.2K	1	
R123,24		ERJ6GEYJ151	M.RESISTOR CH 1/10W 150	2	
R125		VRE0034E750	M.RESISTOR CH 1/10W 75	1	
R126		ERJ6GEYJ332	M.RESISTOR CH 1/10W 3.3K	1	
R127-29		ERJ6GEYJ222	M.RESISTOR CH 1/10W 2.2K	3	
R130,31		ERJ6GEYJ221	M.RESISTOR CH 1/10W 220	2	
R132		VRE0034E750	M.RESISTOR CH 1/10W 75	1	
R133-35		ERJ6GEYJ222	M.RESISTOR CH 1/10W 2.2K	3	
R136		ERJ6GEYJ470	M.RESISTOR CH 1/10W 47	1	
R137		ERJ6GEYJ222	M.RESISTOR CH 1/10W 2.2K	1	
R138,39		ERJ6GEYJ221	M.RESISTOR CH 1/10W 220	2	
R140		VRE0034E750	M.RESISTOR CH 1/10W 75	1	
R141-43		ERJ6GEYJ222	M.RESISTOR CH 1/10W 2.2K	3	
R144		ERJ6GEYJ470	M.RESISTOR CH 1/10W 47	1	
R145		ERJ6GEYJ222	M.RESISTOR CH 1/10W 2.2K	1	
R146,47		ERJ6GEYJ221	M.RESISTOR CH 1/10W 220	2	
R148		VRE0034E750	M.RESISTOR CH 1/10W 75	1	
R149-51		ERJ6GEYJ222	M.RESISTOR CH 1/10W 2.2K	3	
R152		ERJ6GEYJ470	M.RESISTOR CH 1/10W 47	1	
R153		ERJ6GEYJ222	M.RESISTOR CH 1/10W 2.2K	1	
R154,55		ERJ6GEYJ221	M.RESISTOR CH 1/10W 220	2	
R156		VRE0034E750	M.RESISTOR CH 1/10W 75	1	
R157		ERJ6GEYJ222	M.RESISTOR CH 1/10W 2.2K	1	
R158		ERJ6GEYJ470	M.RESISTOR CH 1/10W 47	1	
R181		ERJ6GEYJ682	M.RESISTOR CH 1/10W 6.8K	1	
R182,83		ERJ6GEYJ103	M.RESISTOR CH 1/10W 10K	2	
R184		ERJ6GEYJ105	M.RESISTOR CH 1/10W 1M	1	
SW2		VSS0307	SWITCH	1	
	■	VEP80621A	P.C.BOARD W/COMPONENT		FOR AU-65H
			VIDEO VR		

Ref.No.		Part No.	Part Name & Description	Pcs	Remarks
P128		VJP1246T	CONNECTOR(MALE) 6P	1	
VR1		EVU023O20B14	V.RESISTOR 10K	1	
VR2		EVUL7A020B54	V.RESISTOR 50K	1	
	■	VEP80574A	P.C.BOARD W/COMPONENT		FOR AU-65H,AU-63H
			YC IN/OUT		AU-62H
CN270		VJP1244T	CONNECTOR(MALE) 4P	1	
J201		VJS2579	CONNECTOR (FEMALE)	1	
	■	VEP80551A	P.C.BOARD W/COMPONENT		FOR AU-65H,AU-63H
			9P REMOTE		AU-62H
CN280		VJP1235T	CONNECTOR(MALE) 8P	1	
9P.1		VJS2642A009	CONNECTOR (FEMALE)	1	

MECHANICAL REPLACEMENT PARTS LIST
CASING FRAME ASSEMBLY

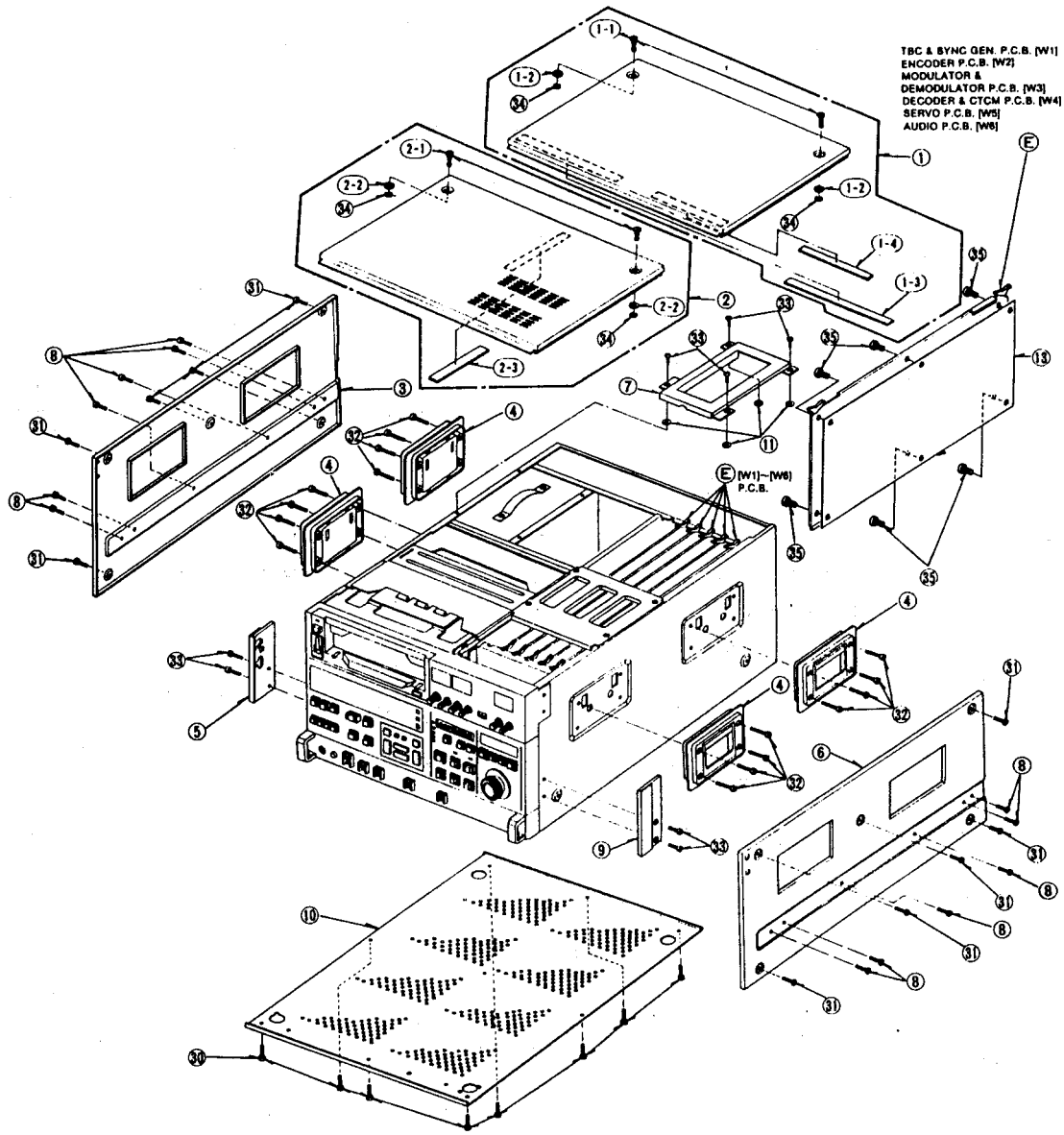

CASING FRAME ASSEMBLY

Ref.No.		Part No.	Part Name & Description	Pcs	Remarks
1		VYP2980	REAR TOP COVER UNIT	1	
1-1		VHD0274	TOP COVER SCREW	2	
1-2		VMX0835	TOP COVER SPACER (SCREW)	2	
1-3		VMX1835	REAR TOP COVER SPACER (A)	1	
1-4		VMT0119	P.C.B. PRESSURE RUBBER	1	
2		VYP2979	FRONT TOP COVER UNIT	1	
2-1		VHD0274	TOP COVER SCREW	2	
2-2		VMX0835	TOP COVER SPACER (SCREW)	2	
2-3		VMX1836	FRONT TOP COVER SPACER (B)	1	
3		VGM0610	LEFT SIDE COVER	1	
4		VYH0128	HANDLE	4	
5		VYK1492	LEFT SIDE PANEL PLATE UNIT	1	
6		VGM0609	RIGHT SIDE COVER	1	
7		VMP2597	POWER UNIT MOUNT ANGLE	1	

8		VHD0153	RAIL MOUNT SCREW	12	
9		VYK1491	RIGHT SIDE PANEL PLATE UNIT	1	
10		VGM0591	BOTTOM PLATE	1	
11		VMX1558	WASHER	4	
13		VXA3966	W P.C.B. SHIELD PLATE	6	5pcs: AU-63H,AU-62H
30		XSB3+6S	SCREW	8	
31		XSB4+8FCS	SCREW	10	
32		XSB4+16FCS	SCREW	16	
33		XTV3+6F	SCREW	8	
34		XUC3FP	E-RING	4	
35		XYNV3+K6FR	SCREW	6	

MECHANICAL CHASSIS ASSEMBLY (1)

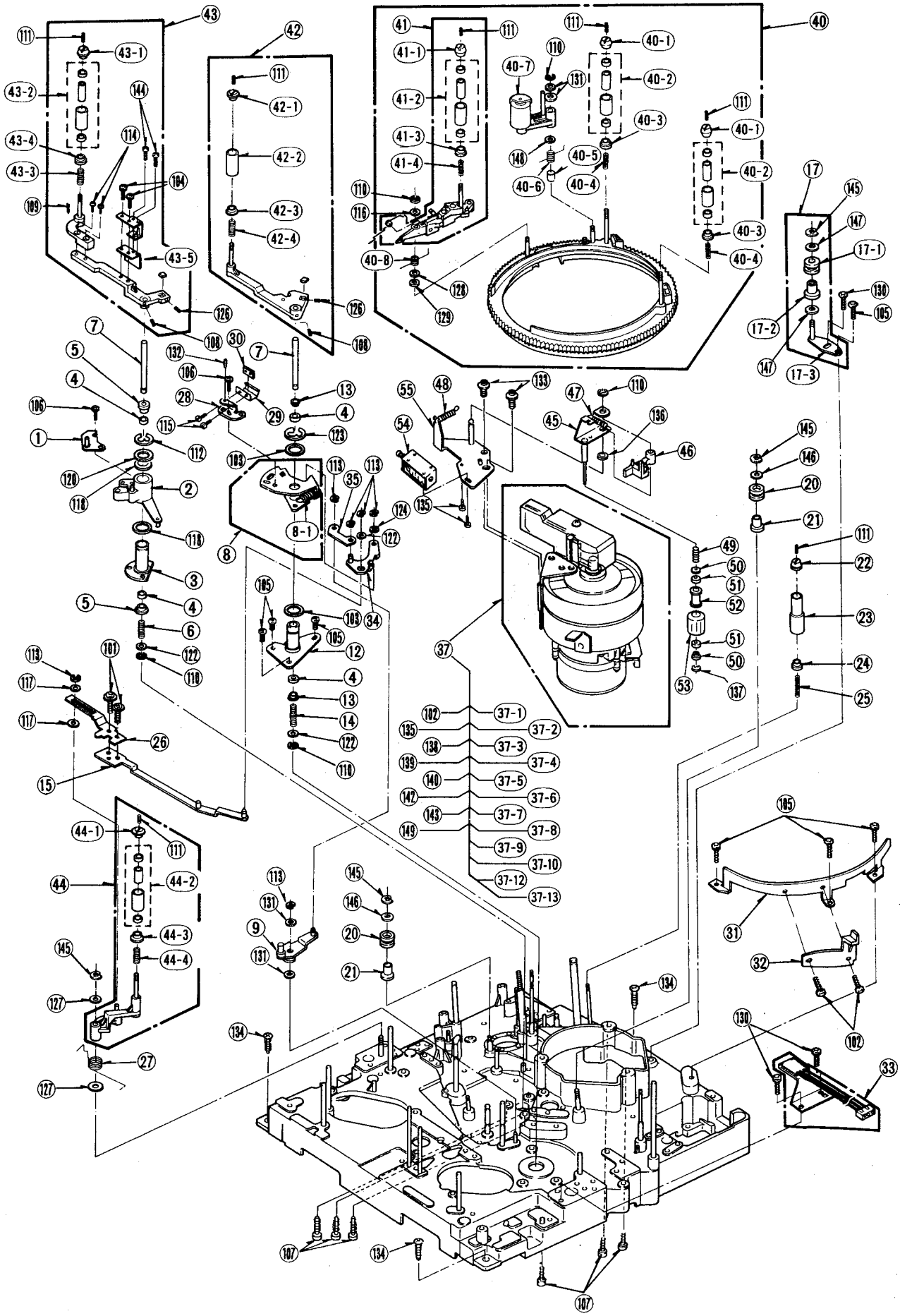

MECHANICAL CHASSIS ASSEMBLY (1)

Ref.No.		Part No.	Part Name & Description	Pcs	Remarks
1		VXA2302	STOPPER PIN BASE UNIT	1	
2		VXL1309	SUPPLY TA SUB-ARM (1) UNIT	1	
3		VDB0772	SUPPLY TENSION SUPORT	1	
			HOUSING		
4		VDB0779	BEARING	4	
5		VMX0794	BEARING RETAINER	2	
6		VMB1378	POST SPRING	1	
7		VMS3662	PANEL FIXTURE (LEFT)	2	
8		VXA4001	TAKE-UP DRAW OUT ARM UNIT	1	
8-1		VMB2131	TAKE-UP TENSION CHARGE	1	
			SPRING		
9		VXA3994	TAKE-UP DRAW-UP DRIVE	1	
			LEVER UNIT		
12		VXD0126	TAKE-UP TENSION HOUSING	1	
13		VMX0794	BEARING RETAINER	2	
14		VMB1377	POST SPRING	1	
15		VXA4003	P1 ARM DRIVE ROD II UNIT	1	
17		VXR0206	RING ROLLER UNIT	1	
17-1		VDP1360	RING ROLLER	1	
17-2		VDB1079	RING ROLLER BOSS	1	
17-3		VXA4252	RING ROLLER (1) UNIT	1	
20		VDP1360	RING ROLLER	2	
21		VDB1079	RING ROLLER BOSS	2	
22		VMS3712	UPPER FLANGE (P4)	1	
23		VXP0824	LIMITER ROLLER (B) UNIT	1	
24		VMS2806	POST BEARING RETAINER (A)	1	
			(P4)		
25		VMB1379	POST SPRING (P3)	1	
26		VMM0237	P1 ARM DRIVE ROD (I)	1	
27		VMB1362	P1 ARM DRAW-OUT SPRING	1	
28		VMA8178	TAKE-UP TENSION REGULATING	1	
			PLATE		
29		VMC0595	TAKE-UP TENSION LEAF SPRING	1	
30		VMA8181	FIXING PLATE	1	
31		VMA6652	TURN ROLLER LIFTER	1	
32		VML1780	STOPPER ARM	1	
33		VEK3785	TAKE-UP MAGNETIC SENSOR	1	
			UNIT		
34		VXA4002	STOPPER ARM UNIT	1	
35		VMM0236	DRAW-OUT ROD	1	
37		VEG0837	DRUM UNIT	1	AU-65H
37		VEG0839	DRUM UNIT	1	AU-63H
37		VEG0838	DRUM UNIT	1	AU-62H
37-1		VEH0494	UPPER DRUM UNIT	1	AU-65H,AU-62H
37-1		VEH0495	UPPER DRUM UNIT	1	AU-63H
37-2		VMD1572	RT ARM BLOCK	1	
37-3		VEK2372	DEW SENSOR	1	
37-4		VSC1334	SHIELD PLATE	1	
37-5		VAG0273	TAPE GUIDE	1	
37-6		VSC2693	SHIELD BAND	1	
37-7		VXS0102	BRUSH UNIT	1	AU-63H
37-8		VXS0092	SLIP-RING UNIT	1	AU-63H
37-9		VEG0781	LOWER DRUM UNIT	1	AU-65H
37-9		VEG0812	LOWER DRUM UNIT	1	AU-63H
37-9		VEG0809	LOWER DRUM UNIT	1	AU-62H
37-10		VMD1612	BRUSH COVER	1	AU-63H
37-12		VMA8157	EARTH ANGLE	1	AU-65H
37-13		VXS0096	EARTH BRUSH	1	AU-65H
40		VXP1182	LOADING RING UNIT	1	
40-1		VMS3638	UPPER FLANGE	2	
40-2		VXP0821	POST ROLLER (B) UNIT	2	
40-3		VMS2803	LOWER FLANGE	2	
40-4		VMB1377	POST SPRING	2	
40-5		VMX1406	PINCH ARM SHAFT COLLAR	1	
40-6		VMB1373	PINCH ROLLER RETURN SPRING	1	
40-7		VXL1288	PINCH ROLLER ARM UNIT	1	
40-8		VMB1796	TR ARM RETURN SPRING A	1	
41		VXL1754	TURN ROLLER ARM UNIT	1	
41-1		VMS3638	UPPER FLANGE	1	
41-2		VXP0821	POST ROLLER (B) UNIT	1	
41-3		VMS2803	LOWER FLANGE	1	
41-4		VMB1376	POST SPRING	1	
42		VXL2189	TAKE-UP TENSION ARM UNIT	1	
42-1		VMS4571	UPPER FLANGE (P1)	1	

Ref.No.		Part No.	Part Name & Description	Pcs	Remarks
42-2		VXP0820	POST ROLLER (A) UNIT	1	
42-3		VMS2800	LOWER FLANGE (P3)	1	
42-4		VMB1378	POST SPRING	1	
42-5		VXL1991	TAKE-UP TENSION ARM UNIT	1	
43		VXL1320	SUPPLY TENSION ARM UNIT	1	
43-1		VMS4572	UPPER FLANGE (P2)	1	
43-2		VXP0820	POST ROLLER (A) UNIT	1	
43-3		VMB1378	POST SPRING	1	
43-4		VMS2801	LOWER FLANGE (P2)	1	
43-5		VMC0119	SUPPLY TENSION LEAF SPRING	1	
44		VXL1323	DRAW-OUT ARM UNIT	1	
44-1		VMS3639	UPPER FLANGE (P1)	1	
44-2		VXP0820	POST ROLLER (A) UNIT	1	
44-3		VMS2800	LOWER FLANGE (P3)	1	
44-4		VMB1378	POST SPRING	1	
45		VXL1994	CLEANER ARM (A) UNIT	1	
46		VML2393	CLEANER ARM (B)	1	
47		VMB2128	ROLLER PRESSURE SPRING	1	
48		VMB2129	ROLLER SPRING	1	
49		VMB1379	POST SPRING (P3)	1	
50		VMX1161	P4 BEARING PRESSURE	2	
51		VDB0778	BEARING	2	
52		VDP1321	CLEANEAR ROLLER	1	
53		VMT0321	CLEANER	1	
54		VSJ0096	CLEANER SOLENOID	1	
55		VXA4016	CLEANER BASE UNIT	1	
56		VXA4013	T-STOPPER PIN BASE UNIT	1	
101		XYN26+F5FZS	SCREW	2	
102		XYN26+C4	SCREW	3	
103		XWGV93D13G	WASHER	2	
104		XYNV26+K8	SCREW	2	
105		XTV3+6F	SCREW	7	
106		XYNV26+K5	SCREW	2	
107		XYNV3+K10S	SCREW	6	
108		XXE26W3FP	HEX HEAD SCREW	2	
109		XXE26A4FP	HEX HEAD SCREW	1	
110		XUC25FP	E RING	4	
111		XXE2C25FP	HEX HEAD SCREW	8	
112		XUC8FP	E RING	1	
113		XUC2FP	E RING	6	
114		XSN2+6	SCREW	2	
115		XYN2+C4	SCREW	2	
116		XWGV3Y6G	WASHER	1	
117		XWGV25D5G	WASHER	2	
118		XWGV10D15G	WASHER	2	
120		XWGV10Y15G	WASHER	1	
122		XWG3	WASHER	3	
123		XUC7FP	E RING	1	
124		XWGV3Y6G	WASHER	1	
126		XXE2D3FP	HEX HEAD SCREW	2	
127		XWGV4D9G	WASHER	1	
128		XWGV3D8G	WASHER	1	
129		XWGV3Y8G	WASHER	1	
130		XTV3+6FFZ	SCREW	3	
131		XWGV3D6G	WASHER	4	
132		XXE2C8FP	HEX HEAD SCREW	1	
133		XYN3+F6FZS	SCREW	2	
134		XYN4+C10S	SCREW	3	
135		XYN2+C3	SCREW	3	
136		XWGV3D6G	WASHER	1	
137		XUC15FP	E-RING	1	
138		XYN3+C6	SCREW	4	
139		XYN3+A10BW	SCREW	2	
140		XYN2+C3	SCREW	1	
142		XYN3+A4	SCREW	1	AU-65H,AU62H
143		XYN26+C6	SCREW	3	
144		XSN2+4	SCREW	2	
145		XUC3FP	E-RING	4	
146		XWGV4D7G	WASHER	2	
147		XWGV4F7G	WASHER	2	
148		XWGV3Z6G	WASHER	1	
149		XYNV0015	SCREW	1	AU-63H

MECHANICAL CHASSIS ASSEMBLY (2)

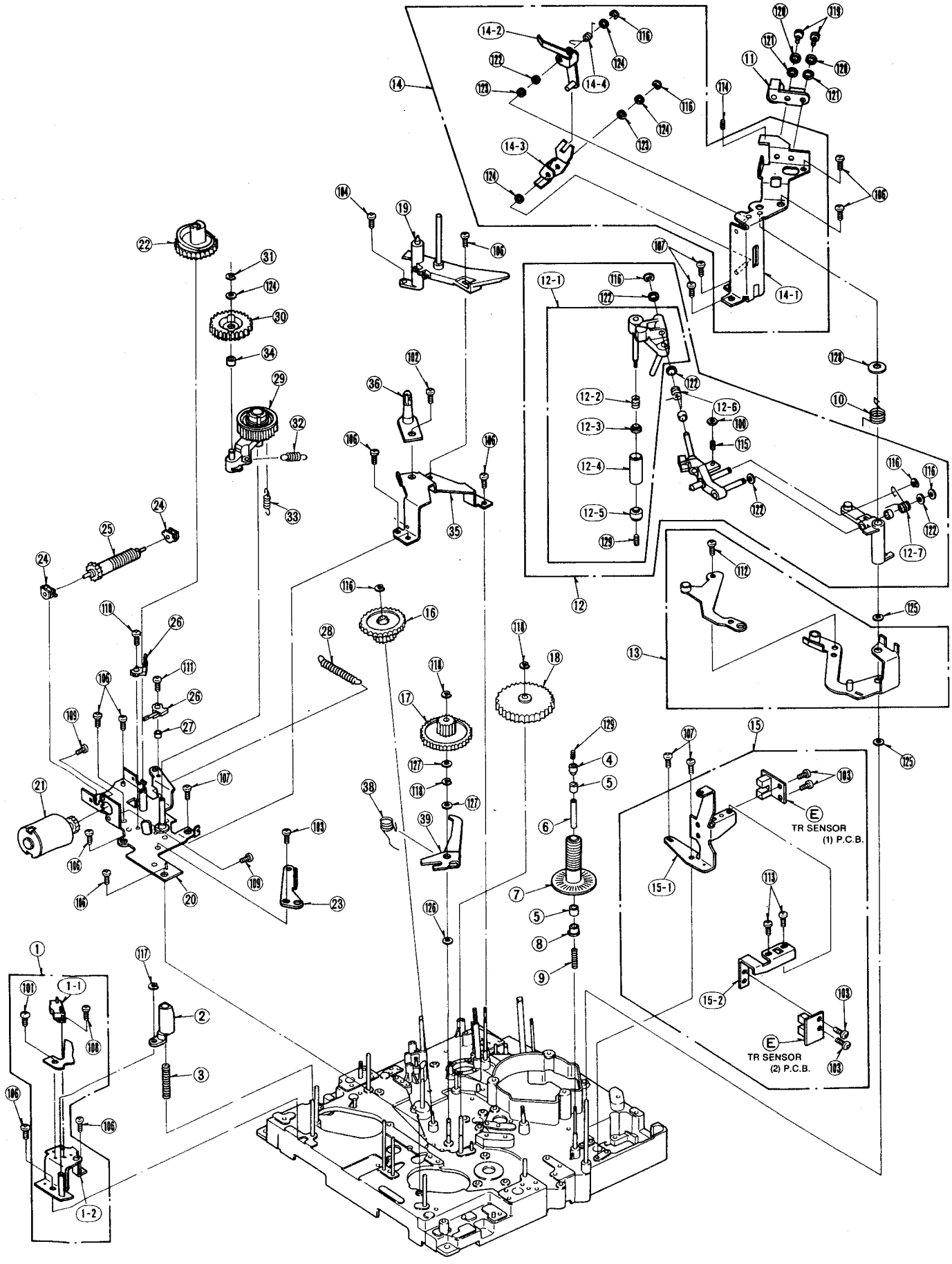

MECHANICAL CHASSIS ASSEMBLY (2)

Ref.No.	Part No.	Part Name & Description	Pcs	Remarks
1	VES0565	DETECTION BIT (L) UNIT	1	
1-1	EVQWUS002	CASSETTE ID MODE SWITCH	1	
1-2	VXA4000	DETECTION BIT (L) (1) UNIT	1	
2	VMD1147	CASSETTE GUIDE S	1	
3	VMB1832	CASSETTE GUIDE S SPRING	1	
4	VHN0046	TIMER ROLLER NUT	1	
5	VDB0778	BEARING	2	
6	VMX0801	TIMER ROLLER INNER COLLAR	1	
7	VXP1183	TIMER ROLLER UNIT	1	
8	VMS2806	POST BEARING RETAINER (A)	1	
		(P4)		
9	VMB1379	POST SPRING (P3)	1	
10	VMB1801	P10 RETURN SPRING	1	
11	VXA2525	TILT ADJUST BASE UNIT	1	
12	VXL1786	SUB-LOADING ARM UNIT	1	
12-1	VXR0131	IP BASE UNIT	1	
12-2	VMB1376	POST SPRING	1	
12-3	VMS2870	BEARING RETAINER	1	
12-4	VXP0822	POST BEARING (C) UNIT	1	
12-5	VMS3638	UPPER FLANGE	1	
12-6	VMB1368	TILT RETURN SPRING	1	
12-7	VMB1375	IP ARM RETURN SPRING	1	
13	VXL2066	ROLLER ARM (C) UNIT	1	
14	VXA3990	SUB-LOADING COVER ASSEMBLY	1	
14-1	VXA3996	SUB-LOADING COVER (1) UNIT	1	
14-2	VXL1294	UPRIGHT LEVER UNIT	1	
14-3	VML1694	UPRIGHT DRIVE LEVER	1	
14-4	VMB1762	UPRIGHT LEVER RETURN SPRING	1	
15	VXA3989	TR SENSOR ANGLE UNIT	1	
15-1	VMA8171	TR SENSOR ANGLE (I)	1	
15-2	VMA8172	TR SENSOR ANGLE (II)	1	
16	VDG0667	RING JUNCTION GEAR (I)	1	
17	VDG0668	RING JUNCTION GEAR (II)	1	
18	VDG0669	GEAR WITH CAM	1	
19	VXA4011	PINCH ROLLER GUIDE UNIT	1	
20	VXA3997	CASSETTE REEL BASE S (I)	1	
		UNIT		
21	VEM0264	MOTOR UNIT	1	
22	VDG0666	CAM WORM WHEEL	1	
23	VMA8170	POSITIONING PLATE	1	
24	VDB0833	WORM BEARING	2	
25	VXP1019	CASSETTE S WORM SHAFT UNIT	1	
26	VSH0026	LEAF SWITCH	2	
27	VMX0400	LEAF SWITCH SPACER	1	
28	VMB2132	BALANCING SPRING 1	1	
29	VXA3999	CASSETTE S REEL STAND BASE	1	
		(1) UNIT		
30	VDG0670	CASSETTE S REEL	1	
		INTERMEDIATE GEAR		
31	VMX0653	CUT WASHER	1	
32	VMB2140	INTERMEDIATE GEAR SPRING	1	
33	VMB2141	CASSETTE S REEL STAND	1	
		SPRING		
34	VDB0429	BEARING	1	
35	VMA8177	LAMP MOUNT BASE	1	
36	VEK3493	LAMP MOUNT (1) UNIT	1	
38	VMB2135	SUPPLY DRIVE ARM RETURN	1	
		SPRING		
39	VML2387	SUPPLY TENSION DRIVE ARM	1	
100	XNG3CS	NUT	1	
101	XSN2+3	SCREW	1	
102	XSS26+5	SCREW	1	
103	XTV26+4F	SCREW	5	
104	XTV26+8F	SCREW	1	
106	XTV3+6F	SCREW	11	
107	XTV3+8F	SCREW	5	
108	XQN16+A3	SCREW	1	
109	XYN2+C4	SCREW	2	
110	XYN2+C5	SCREW	1	
111	XYN2+C8	SCREW	1	
112	XYN26+F5FZ	SCREW	1	

Ref.No.	Part No.	Part Name & Description	Pcs	Remarks
113	XYN26+F6FZ	SCREW	2	
114	XXE3A6FPS	HEX HEAD SCREW	1	
115	XXE3C6FP	HEX HEAD SCREW	1	
116	XUC25FP	E-RING	6	
117	XUC2FP	E-RING	1	
118	XUC3FP	E-RING	3	
119	XVE3B6FPS	HEX HEAD SCREW	2	
120	XWA3B	WASHER	2	
121	XWE3	WASHER	2	
122	XWGV3D6G	WASHER	5	
123	XWGV3F6G	WASHER	2	
124	XWGV3Y6G	WASHER	4	
125	XWGV4D7G	WASHER	2	
126	XWGV4F7G	WASHER	1	
127	XWGV4Y7G	WASHER	2	
128	XWGV4Y9G	WASHER	1	
129	XXE2C25FP	HEX HEAD SCREW	2	

MECHANICAL CHASSIS ASSEMBLY (3)

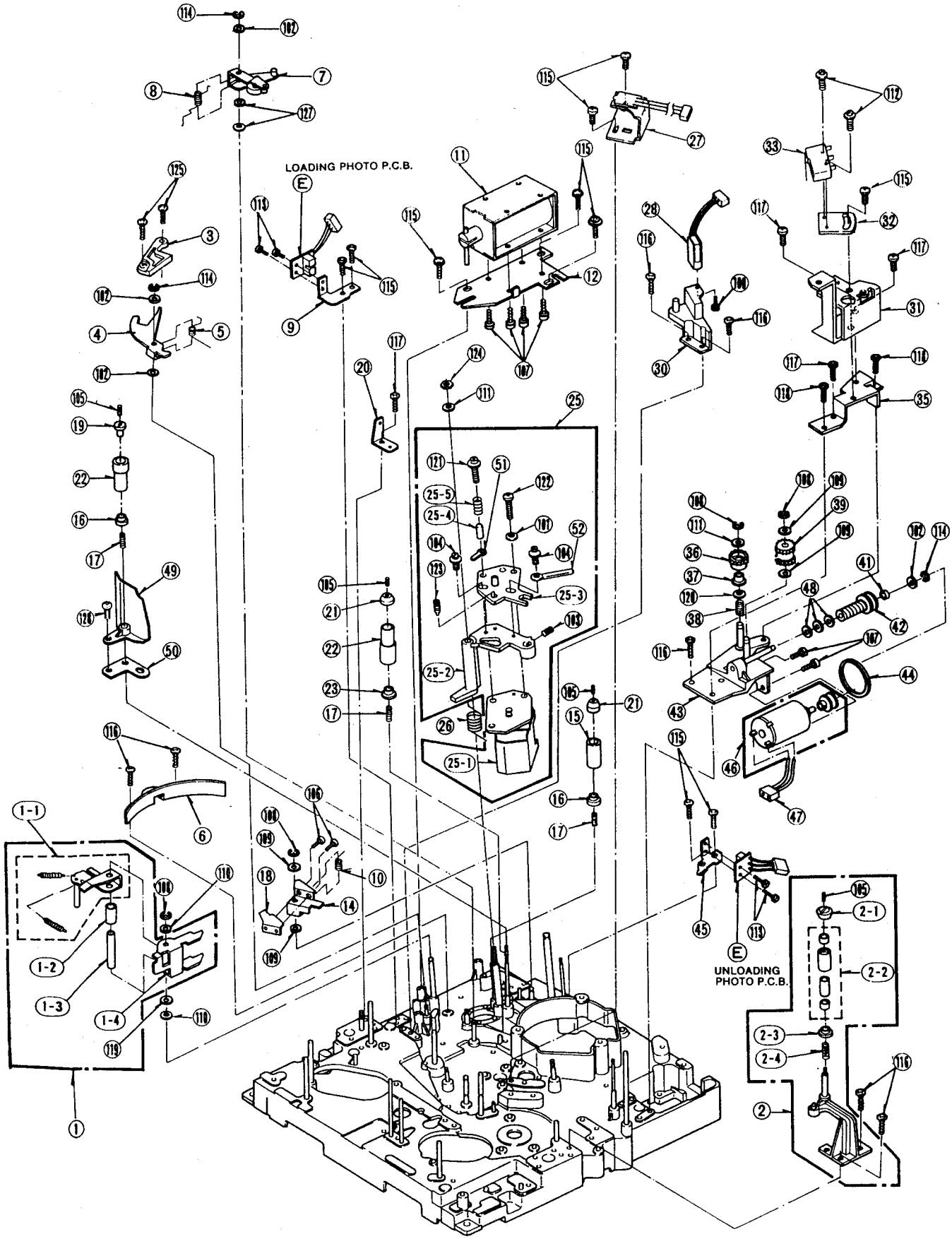

MECHANICAL CHASSIS ASSEMBLY (3)

Ref.No.		Part No.	Part Name & Description	Pcs	Remarks
1		VXL1679	PINCH PRESSURE LEVER UNIT	1	
1-1		VXL1680	PINCH DRIVE ARM UNIT	1	
1-2		VMX0800	PINCH COLLAR (3)	1	
1-3		VMX0799	PINCH COLLAR (2)	1	
1-4		VML1675	PINCH PRESSURE LEVER	1	
2		VXA3226	CASSETTE POSITIONING BASE	1	
			UNIT		
2-1		VMS3638	UPPER FLANGE	1	
2-2		VXP0821	POST ROLLER (B) UNIT	1	
2-3		VMS2803	LOWER FLANGE	1	
2-4		VMB1376	POST SPRING	1	
3		VMA7289	STOPPER RETAINER	1	
4		VML1702	TR STOPPER LEVER	1	
5		VMB1372	STOPPER LEVER RETURN SPRING	1	
6		VMD1412	TURN ROLLER GUIDE A	1	
7		VXL1995	DRIVE ARM UNIT	1	
8		VMB2134	DRIVE ARM RETURN SPRING	1	
9		VMA6624	LOADING PHOTO PLATE	1	
10		VMB1345	UNLOADING DETECTION RETURN	1	
			SPRING		
11		VSJ0069	PINCH SOLENOIDE	1	
12		VMA6608	PINCH SOLENOIDE BASE	1	
14		VML2091	UNLOADING DETECTION ARM	1	
15		VXP0819	POST ROLLER (A1) UNIT	1	
			(P6)		
16		VMS2800	LOWER FLANGE (P3)	2	
17		VMB1379	POST SPRING (P3)	3	
18		VMA6685	TURN ROLLER RETAINER	1	
19		VMS2807	POST BEARING RETAINER (B)	1	
			(P3)		
20		VMA6625	PINCH RETURN SPRING HOOK	1	
21		VMS3712	UPPER FLANGE (P4)	2	
22		VXP0823	LIMITER ROLLER (A) UNIT	2	
			(P3)		
23		VMS2806	POST BEARING RETAINER (A)	1	
			(P4)		
25		VED0140	A/C HEAD UNIT	1	AU-65H
25		VED0142	A/C HEAD UNIT	1	AU-63H,AU-62H
25-1		VBR0167	A/C HEAD	1	AU-65H
25-1		VBR0168	A/C HEAD	1	AU-63H,AU-62H
25-2		VMD1579	A/C HEAD HEIGHT ADJUSTMENT	1	
			BASE		
25-3		VXA4085	HEAD MOUNTING BASE UNIT	1	
25-4		VMX1441	ADJUST LOCK COLLAR	1	
25-5		VMB1843	ADJUST SPRING	1	
26		VMB2147	HEAD SPRING	1	
27		VEK3784	SUPPLY MAGNETIC SENSOR	1	
			MOUNT UNIT		
28		VBS0024	FE HEAD	1	AU-65H
28		VBS0043	FE HEAD	1	AU-63H,AU-62H
30		VMA7293	FE HEAD BASE	1	
31		VMA7295	MICROSWITCH BASE	1	
32		VMA6715	MICROSWITCH REGULATING	1	
			PLATE		
33		VSM0042	MICROSWITCH	1	
35		VMA6805	MOTOR HOLDER COVER	1	
36		VDG0215	RING DRIVE GEAR	1	
37		VMX1405	DRIVE GEAR SLEEVE A	1	
38		VMB1343	DRIVE GEAR PRESSURE SPRING	1	
39		VDG0216	JUNCTION GEAR	1	
41		VDB0899	BEARING	1	
42		VXP1056	WORM PULLEY UNIT	1	
43		VXA2287	LOADING MOTOR HOLDER UNIT	1	
44		VDV0156	LOADING BELT	1	
45		VMA6623	UNLOADING PHOTO MOUNT	1	
46		VEM0323	LOADING MOTOR UNIT	1	
46-1		VRD0030	LOADING MOTOR	1	
47		VEE3971	CONNECTOR UNIT	1	
48		VDB0371	THRUST BEARING	3	
49		VMD1596	DO PROTECTOR COVER	1	
50		VMA8285	DO PROTECTOR COVER BASE	1	
51		VJR3	CLAMPER	1	
52		VJR3	CLAMPER	1	AU-65-P,AU-65-E

Ref.No.		Part No.	Part Name & Description	Pcs	Remarks
100		XYN2+C5	SCREW	1	
101		XWG26	WASHER	1	
102		XWGV3D6G	WASHER	4	
103		XXE3C6FP	HEX HEAD SCREW	1	
104		XYN26+F6	SCREW	2	
105		XXE2C25FP	HEX HEAD SCREW	4	
106		XYN26+C4	SCREW	2	
107		XYN3+C5S	SCREW	6	
108		XUC3FP	E RING	4	
109		XWGV4D7G	WASHER	4	
110		XWGV4D9G	WASHER	2	
111		XWE4	WASHER	2	
112		XYN2+F10	SCREW	2	
113		XTV26+4F	SCREW	4	
114		XUC25FP	E RING	3	
115		XTV3+6FFZ	SCREW	10	
116		XTV3+8F	SCREW	7	
117		XTV3+6F	SCREW	4	
118		XTV3+10F	SCREW	2	
119		XWGV5D9G	WASHER	1	
120		XWG4FC	WASHER	1	
121		XYN3+F18	SCREW	1	
122		XSN26+12S	SCREW	1	
123		XXE3A8FP	HEX HEAD SCREW	1	
124		XNG4ES	NUT	1	
125		XTV26+6F	SCREW	2	
127		XWGV3F6G	WASHER	2	
128		XSN26+4	SCREW	1	

MECHANICAL CHASSIS ASSEMBLY (4)

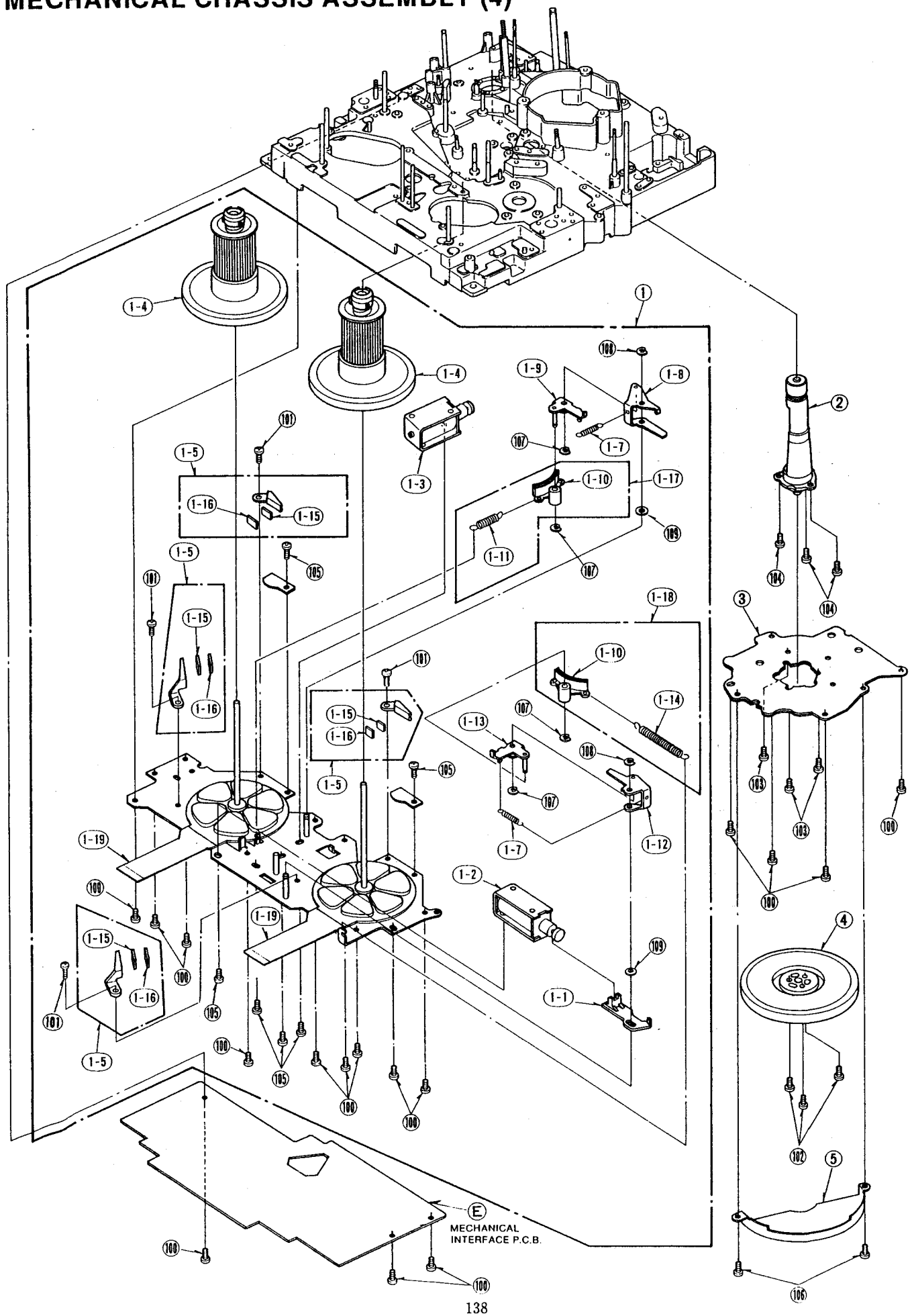

MECHANICAL CHASSIS ASSEMBLY (4)

Ref.No.		Part No.	Part Name & Description	Pcs	Remarks
1		VXA4777	REEL BASE UNIT	1	
1-1		VMM0240	BRAKE RELEASE ROD	1	
1-2		VSJ0098	TAKE-UP BRAKE SOLENOID	1	
1-3		VSJ0097	SUPPLY BARAKE SOLENOID	1	
1-4		VXR0191	REEL STAND UNIT	2	
1-5		VXA2046	FG HOLDER UNIT	4	
1-7		VMB2139	BRAKE SPRING (II)	2	
1-8		VXL1996	SUPPLY BRAKE ARM (1) UNIT	1	
1-9		VXL1997	SUPPLY BRAKE ARM (2) UNIT	1	
1-10		VXL1998	SUPPLY BRAKE ARM (3) UNIT	2	
1-11		VMB2137	SUPPLY BRAKE SPRING (II)	1	
1-12		VXL1999	TAKE-UP BRAKE ARM (1) UNIT	1	
1-13		VXL2000	TAKE-UP BRAKE ARM (2) UNIT	1	
1-14		VMB2138	TAKE-UP BRAKE SPRING (I)	1	
1-15		HW-300B	HALL ELEMENT	4	
1-16		VMD0621	FG SUPPORT (2)	4	
1-17		VXA4004	SUPPLY BRAKE ARM (3) UNIT	1	
1-18		VXA4005	TAKE-UP BRAKE ARM (3) UNIT	1	
1-19		VWJ0356	FLAT WIRE	2	
2		VXD0110	CAPSTAN HOUSING UNIT	1	
3		VEK3699	CAPSTAN STATOR UNIT	1	
4		VXP1235	ROTOR UNIT	1	
5		VSC2066	CAPSTAN MOTOR COVER	1	
100		XTV3+6F	SCREW	16	
101		XYN2+F4	SCREW	4	
102		XYN2+C10	SCREW	3	
103		XYN2+C6V	SCREW	3	
104		XYN26+C7V	SCREW	3	
105		XYN26+F4	SCREW	6	
106		XYNV26+K4S	SCREW	2	
107		XUC15FP	E RING	4	
108		XUC25FP	E RING	2	
109		XWGV3D6G	WASHER	2	

FRONT PANEL ASSEMBLY (AU-65H)

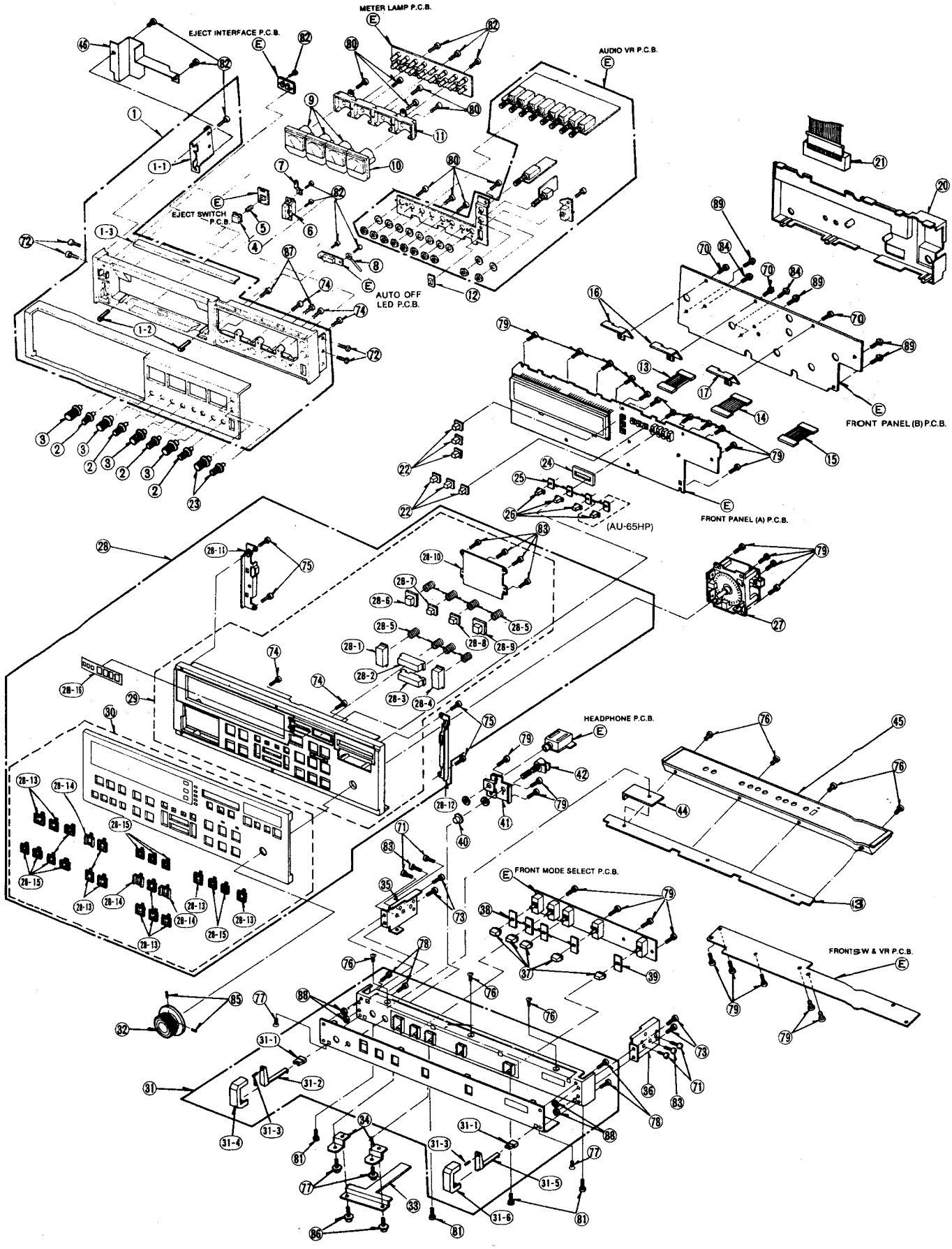

FRONT PANEL ASSEMBLY (AU-65H)

Ref.No.		Part No.	Part Name & Description	Pcs	Remarks
1		VYP4151	UPPER FRONT PANEL (1) UNIT	1	
1-1		VMP1006	GND ANGLE	1	
1-2		VGK1511	CASSETTE GUIDE	2	
1-3		VMP0830	FRONT (U) PROTECTOR ANGLE	1	
2		VXU0768	VR KNOB (S)	4	
3		VXU0766	VR KNOB (B)	4	
4		VGU3394	EJECT BUTTON	1	
5		VMB1730	EJECT BUTTON SPRING	1	
6		EST15367S	POWER SWITCH	1	
7		VMP1008	EJECT SWITCH ANGLE	1	
8		VJR3	CLUMPER	1	
9		VSE0101	AUDIO METER	3	
10		VSE0103	TRACKING METER	1	
11		VGQ1051	METER COVER	1	
12		VGU3388	SWITCH KNOB	1	
13		VEE3171	CONNECTOR CABLE	1	
14		VEE3170	CONNECTOR CABLE	1	
15		VEE3799	CONNECTOR CABLE	1	
16		VMP0964	P.C.B. SUPPORT ANGLE (A)	2	
17		VMP1926	P.C.B. SUPPORT ANGLE (B)	1	
20		VGP3137	FRONT BOARD CAVER	1	
21		VEC0628	20P FLAT CABLE	1	
22		VGU4359	RESET BUTTON	6	
23		VXU0769	TRACKING VR KNOB	1	
24		VMX1328	SLIDE SWITCH SPACER	1	
25		VGH0520	SWITCH COVER	3	
26		VGU2089	SLIDE SWITCH KNOB	3	
27		VSR0083	SEARCH DIAL	1	
28		VYP3530	FRONT PANEL (M) 1 UNIT	1	
28-1		VGU4117	EDIT IN BUTTON	1	
28-2		VGU4116	EDIT SET BUTTON	1	
28-3		VGU4115	GO-TO BUTTON	1	
28-4		VGU4118	EDIT OUT BUTTON	1	
28-5		VMB1799	SPRING	8	
28-6		VGU4119	AUDIO IN BUTTON	1	
28-7		VGU4114	TRIM (-) BUTTON	1	
28-8		VGU4113	TRIM (+) BUTTON	1	
28-9		VGU4120	AUDIO OUT BUTTON	1	
28-10		VMP1529	EDIT BUTTON GUIDE	1	
28-11		VMP0562	PANEL HOLDER ANGLE (L)	1	
28-12		VMP0561	PANEL HOLDER ANGLE (R)	1	
28-13		VGK1595	SWITCH GUARD	11	
28-14		VGF0206	SWITCH GUARD	3	
28-15		VGK1512	SWITCH GUARD	10	
28-16		VGH2627	TC BUTTON NAME PLATE	1	
29		VYP2203	FRONT PANEL (M) 2 UNIT	1	
30		VYP3529	FRONT ALMINUM PANEL UNIT	1	
31		VYP4047	CONTROL PANEL (1) UNIT	1	
31-1		VGF0147	HANDLE COVER	2	
31-2		VML1657	LOCK RELEASE LEAVER (L)	1	
31-3		VMB1333	SPRING	2	
31-4		VKH0111	HANDLE (L)	1	
31-5		VML1656	LOCK RELEASE LEVER (R)	1	
31-6		VKH0110	HANDLE (R)	1	
32		VXU0767	SEARCH DIAL KNOB UNIT	1	
35		VMP1057	RAIL HOLDER ANGLE (L)	1	
36		VMP1056	RAIL HOLDER ANGLE (R)	1	
37		VGU2080	SWITCH KNOB	5	
38		VMZ0655	SWITCH SHEET	4	
39		VMZ1194	SWITCH SHEET	1	
40		VGU3121	HEADPHONE VR KNOB	1	
41		VMP0589	HEADPHONE MOUNT ANGLE	1	
42		EWGGOAP15A14	HEADPHONE VOLUME	1	
43		VMP0587	PANEL HOLDER ANGLE	1	
44		VMP0932	GND ANGLE	1	
45		VYP3531	CONTROL PANEL (2) UNIT	1	
46		VMZ1637	AC SWITCH BARRIER	1	
70		XSB3+5S	SCREW	3	
71		XSB3+6S	SCREW	4	
72		XSB3+8FZS	SCREW	4	
73		XSB3+8S	SCREW	4	
74		XSN3+6S	SCREW	5	
75		XSN3+8S	SCREW	4	
76		XSS3+6FCS	SCREW	7	
78		XSS3+10S	SCREW	4	
79		XTN4+10G	SCREW	28	
80		XTN4+10J	SCREW	8	
81		XTS3+8GFC	SCREW	4	
82		XTV3+8J	SCREW	11	
83		XTV3+10J	SCREW	2	
84		XTV4+15G	SCREW	2	
85		XXEV3W6FPS	HEX SCREW	2	
87		XYN3+C18S	SCREW	2	
88		XNG3ES	NUT	4	
89		XTV4+20G	SCREW	4	
90		XTV3+8G	SCREW	4	

FRONT PANEL ASSEMBLY (AU-63H, AU-62H)

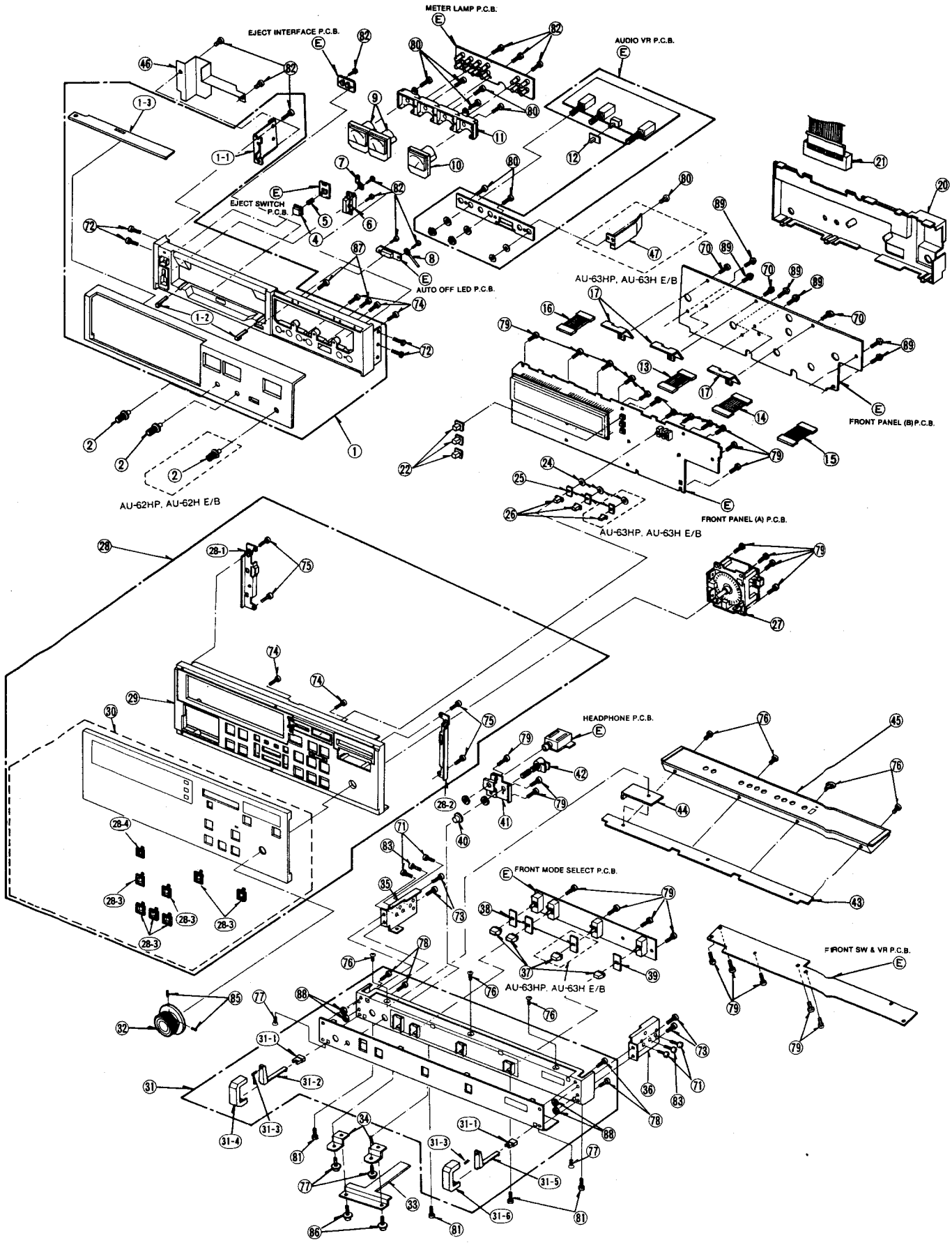

FRONT PANEL ASSEMBLY (AU-63H, AU-62H)

Ref.No.		Part No.	Part Name & Description	Pcs	Remarks
1		VYP3221	UPPER FRONT PANEL (1) UNIT	1	AU-63H
1		VYP3134	UPPER FRONT PANEL (1) UNIT	1	AU-62H
1-1		VMP1006	GND ANGLE	1	
1-2		VGK1511	CASSEITE GUIDE	2	
1-3		VMP0830	FRONT (U) PROTECTOR ANGLE	1	
2		VXU0768	VR KNOB (S)	3	2pcs: AU-63H
4		VGU3394	EJECT BUTTON	1	
5		VMB1730	EJECT BUTTON SPRING	1	
6		EST15367S	POWER SWITCH	1	AU-63H,AU-62H
7		VMP1008	EJECT SWITCH ANGLE	1	
8		VJR3	CLUMPER	1	
9		VSE0101	AUDIO METER	2	
10		VSE0112	TRACKING METER	1	
11		VGQ1051	METER COVER	1	
12		VGU2085	SWITCH KNOB	1	
13		VEE5375	CONNECTOR CABLE	1	
14		VEE5374	CONNECTOR CABLE	1	
15		VEE5373	CONNECTOR CABLE	1	
16		VEE5376	CONNECTOR CABLE	1	
17		VMP1926	P.C.B. SUPPORT ANGLE (B)	3	
20		VMZ1160	FRONT BOARD CAVER	1	
21		VEC0628	20P FLAT CABLE	1	
22		VGU4359	RESET BUTTON	3	
24		VMX1072	SLIDE SWITCH SPACER	3	
25		VGH0520	SWITCH COVER	3	
26		VGU2089	SLIDE SWITCH KNOB	3	
27		VSR0083	SEARCH DIAL	1	
28		VYP3528	FRONT PANEL (M) 1 UNIT	1	
28-1		VMP0562	PANEL HOLDER ANGLE (L)	1	
28-2		VMP0561	PANEL HOLDER ANGLE (R)	1	
28-3		VGK1595	SWITCH GUARD	7	
28-4		VGK1512	SWITCH GUARD	1	
29		VYP2138	FRONT PANEL (M) 2 UNIT	1	
30		VYP3527	FRONT ALMINUM PANEL UNIT	1	
31		VYP4049	CONTROL PANEL (1) UNIT	1	AU-63H
31		VYP4048	CONTROL PANEL (1) UNIT	1	AU-62H
31-1		VGF0147	HANDLE COVER	2	
31-2		VML1657	LOCK RELEASE LEAVER (L)	1	
31-3		VMB1333	SPRING	2	
31-4		VKH0111	HANDLE (L)	1	
31-5		VML1656	LOCK RELEASE LEVER (R)	1	
31-6		VKH0110	HANDLE (R)	1	
32		VXU0767	SEARCH DIAL KNOB UNIT	1	
35		VMP1057	RAIL HOLDER ANGLE (L)	1	
36		VMP1056	RAIL HOLDER ANGLE (R)	1	
37		VGU2080	SWITCH KNOB	4	3pcs: AU-62H
38		VMZ0655	SWITCH SHEET	3	2pcs: AU-62H
39		VMZ1194	SWITCH SHEET	1	
40		VGU3121	HEADPHONE VR KNOB	1	
41		VMP0589	HEADPHONE MOUNT ANGLE	1	
42		EWGG0AP15A14	HEADPHONE VOLUME	1	
43		VMP0587	PANEL HOLDER ANGLE	1	
44		VMP0932	GND ANGLE	1	
45		VYP3531	CONTROL PANEL (2) UNIT	1	
46		VMZ1637	AC SWITCH BARRIER	1	
47		VMP2910	VR P.C.B. HOLDER ANGLE	1	AU-63H
70		XSB3+5S	SCREW	3	
71		XSB3+6S	SCREW	4	
72		XSB3+8FZS	SCREW	4	
73		XSB3+8S	SCREW	4	
74		XSN3+6S	SCREW	5	
75		XSN3+8S	SCREW	4	
76		XSS3+6FCS	SCREW	7	
78		XSS3+10S	SCREW	4	
79		XTN4+10G	SCREW	28	
80		XTN4+10J	SCREW	8	
81		XTS3+8GFC	SCREW	4	
82		XTV3+8J	SCREW	11	
83		XTV3+10J	SCREW	2	
85		XXEV3W6FPS	HEX SCREW	2	
87		XYN3+C18S	SCREW	2	

Ref.No.		Part No.	Part Name & Description	Pcs	Remarks
88		XNG3ES	NUT	4	
89		XTV4+20G	SCREW	6	

REAR JACK PANEL ASSEMBLY

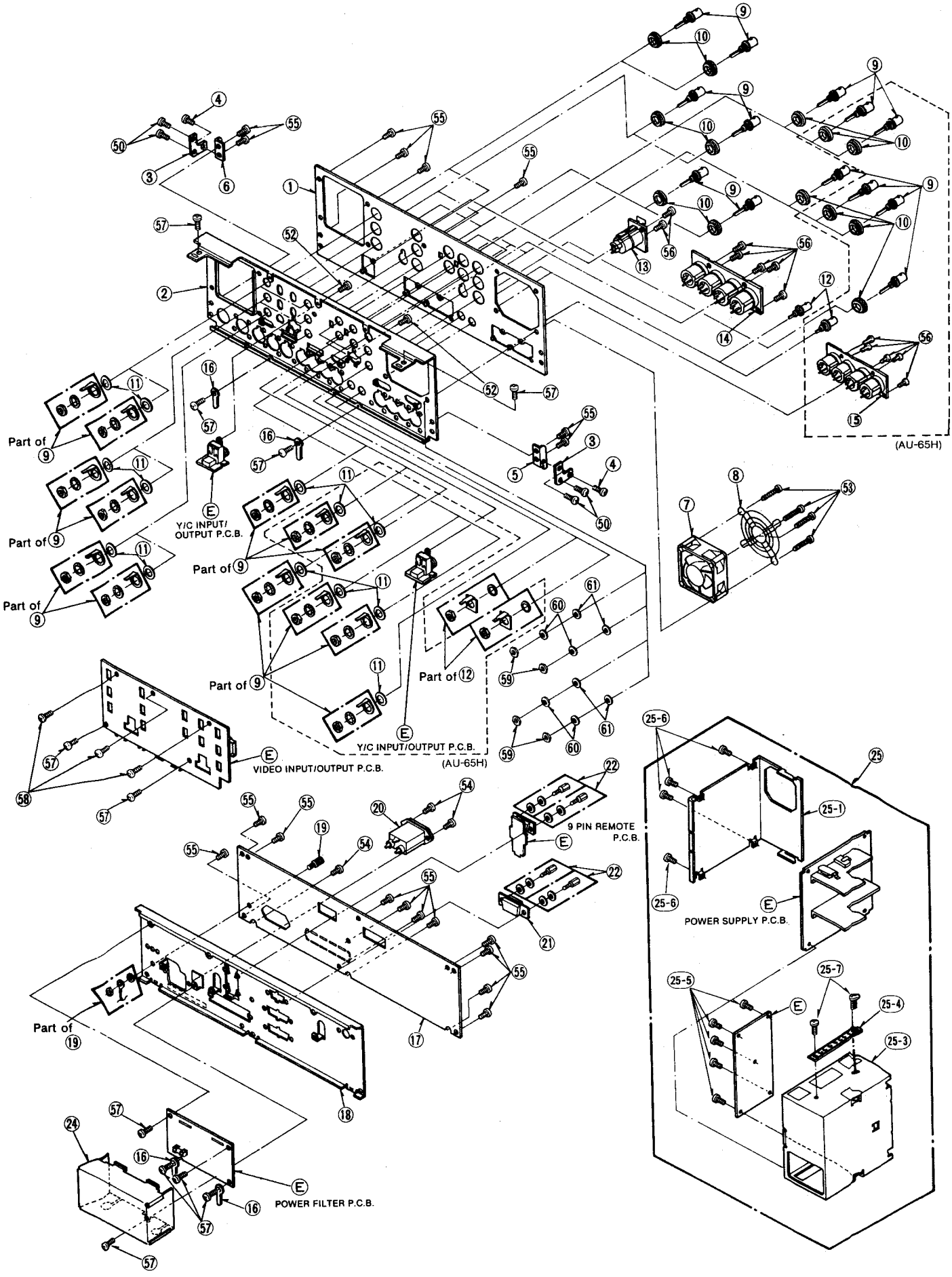

REAR JACK PANEL ASSEMBLY

Ref.No.		Part No.	Part Name & Description	Pcs	Remarks
1		VGH3039	JACK NAME PLATE (UPPER)	1	AU-65H
1		VGH3088	JACK NAME PLATE (UPPER)	1	AU-63H,AU-62H
2		VJH0583	JACK PLATE (UPPER)	1	
3		VMP1007	JACK ROTARY PLATE	2	
4		VHD0325	JACK ANGLE SCREW	2	
5		VMP0994	JACK ROTARY ANGLE (L)	1	
6		VMP0960	JACK ROTARY ANGLE (R)	1	
7		VRF0061	FUN MOTOR	1	
8		VGF0409	FUN MOTOR COVER	1	
9		VJS1087	BNC CONNECTOR	13	8pcs: AU-63H,AU-62H
10		VMZ0631	BNC NUT	13	8pcs: AU-63H,AU-62H
11		VMZ0630	WASHER	13	8pcs: AU-63H,AU-62H
12		VJS2525	BNC CONNECTOR	1	
13		VJP1894	XLR CONNECTOR	1	
14		VJP2524	XLR (4PC) CONNECTOR	1	
15		VJS2525	XLR (4PC) CONNECTOR	1	AU-65H
16		VJR3	CLUMPER	4	
17		VGH3045	JACK NAME PLATE (LOWER)	1	
18		VJH0584	JACK PLATE (LOWER)	1	
19		VJH0082	GND TERMINAL	1	
20		VJP0083	AC INLET	1	
21		VEE6377	15P REMOTE CONNECTOR	1	
22		VXQ0102	HEX A BASS	4	
24		VMZ1597	POWER FILTER COVER	1	
25		VYK3004	POWER UNIT	1	NTSC
25		VYK3637	POWER UNIT	1	PAL
25-1		VMP2698	COVER	1	
25-3		VMP2696	FRAME	1	
25-4		VKH0230	HANDLE	1	
25-5		XYNV3+K8S	SCREW	4	
25-6		XTV3+8F	SCREW	4	
25-7		XYN4+F8S	SCREW	2	
50		XYN3+C6S	SCREW	4	
52		XSN3+6FZS	SCREW	2	
53		XSN4+35FCS	SCREW	4	
54		XSB3+8FZS	SCREW	3	
55		XTB3+6FFZ	SCREW	14	
56		XTN26+6FFY	SCREW	12	
57		XTV3+6F	SCREW	10	
58		XYE3+EF8	SCREW	3	
59		XNG4ES	NUT	4	
60		XWA4B	SPRING WASHER	4	
61		XWG4	WASHER	4	

CHASSIS FRAME ASSEMBLY

Ref.No.		Part No.	Part Name & Description	Pcs	Remarks
1		VMP2607	SIDE FRAME (L)	1	
2		VMP0842	TOP MOUNT PLATE (L)	1	
3		VMP0616	CHASSIS FRAME (L)	1	
4		VYQ0013	RAIL UNIT	2	
5		VMP2616	JACK MOUNT ANGLE (BOTTOM)	2	
6		VYQ0252	ROTARY ANGLE (L) UNIT	1	
7		VGQ2025	B BOARD GUIDE RAIL	2	
8		VMP2596	POWER MOUNT ANGLE	1	
9		VMP2612	POWER FRAME	1	
10		VRF0061	FUN MOTOR	1	
11		VGF0335	FUN MOTOR COVER	1	
12		VJF0022	M CLUMPER	11	
13		VMP2610	GUIDE FRAME (M)	1	
14		VMP0618	CHASSIS FRAME (M)	1	
15		VMP2783	TC BOARD STOPPER ANGLE	1	
16		VMP2693	FOOT MOUNT ANGLE	1	
18		VYQ0586	FOOT	4	
20		VMP2614	FRONT FRAME	1	
21		VMP2598	P.C.B. MOUNT ANGLE (B)	1	
22		VMP0617	CHASSIS FRAME (R)	1	
23		VMP3676	CENTER FRAME	1	
24		VXA3967	B P.C.B. SHIELD PLATE	1	
25		VMP2620	W MOTHER P.C.B. ANGLE	2	
26		VJR3	CLUMPER	1	
27		VMX1314W075	FREE BUSHING	1	
28		VGQ2024	W BOARD GUIDE RAIL	2	
29		VMP2611	GUIDE FRAME (S)	1	
30		VHN0011	LATCH	4	
31		VGH3041	SUB FRONT PANEL	1	AU-65H
31		VGH2550	SUB FRONT PANEL	1	AU-63H,AU-62H
32		VYQ0251	ROTARY ANGLE (R) UNIT	1	
33		VMP2739	AT BOARD MOUNT ANGLE	1	AU-65H,AU-63H
			(BOTTOM)		
34		VMP0610	SIDE FRAME (R)	1	
35		VMP2615	FUN MOTOR MOUNT ANGLE	1	
36		VMP2594	TOP MOUNT PLATE (R)	1	
37		VMX1841	P.C.B. CUSHION (W)	1	
38		VMX1558	WASHER	4	
39		VMP0692	GUIDE FRAME MOUNT ANGLE	1	
40		VMP0683	GUIDE FRAME (L2)	1	
41		VMP2609	GUIDE FRAME (L)	1	
42		VMP1525	GUIDE FRAME (L) PROTECTOR	1	
			ANGLE		
43		VMZ1590	CUT SHEET (BIG)	1	
44		VMZ1591	CUT SHEET (SMALL)	1	
45		VMX1314W146	FREE BUSHING	1	
46		VMP2617	W MOTHER P.C.B. ANGLE (F)	1	
47		VMP2618	W MOTHER P.C.B. ANGLE (C)	1	
48		VMP2619	W MOTHER P.C.B. ANGLE (B)	1	
49		VSC2341	SHIELD CASE LID	1	
50		VMP0972	P.C.B. MOUNT ANGLE	1	
51		VMP2600	SWITCH ANGLE	1	
54		VMX1184	FREE BUSHING	1	
60		VMP3668	W BOARD HOLD ANGLE	1	
80		XTV3+6F	SCREW	4	
81		XSB3+6S	SCREW	12	
82		XSN4+35FCS	SCREW	4	
84		XTB3+6F	SCREW	4	
85		XTV3+6F	SCREW	70	
86		XTV3+6FR	SCREW	19	
87		XTV3+10J	SCREW	4	
88		XYN3+C6S	SCREW	4	
89		XYN4+K16S	SCREW	4	
90		XYN4+F6S	SCREW	4	
91		XYNV3+K6FR	SCREW	4	
100		VMP2738	HOLDER ANGLE	1	
101		VSC2299	SHIELD CAVER	1	
102		XTV3+6F	SCREW	2	
103		XTV3+6F	SCREW	1	
110		XTV3+8F	SCREW	1	
111		VSC3486	SHIELD BOX	1	AU-65H

CHASSIS FRAME ASSEMBLY

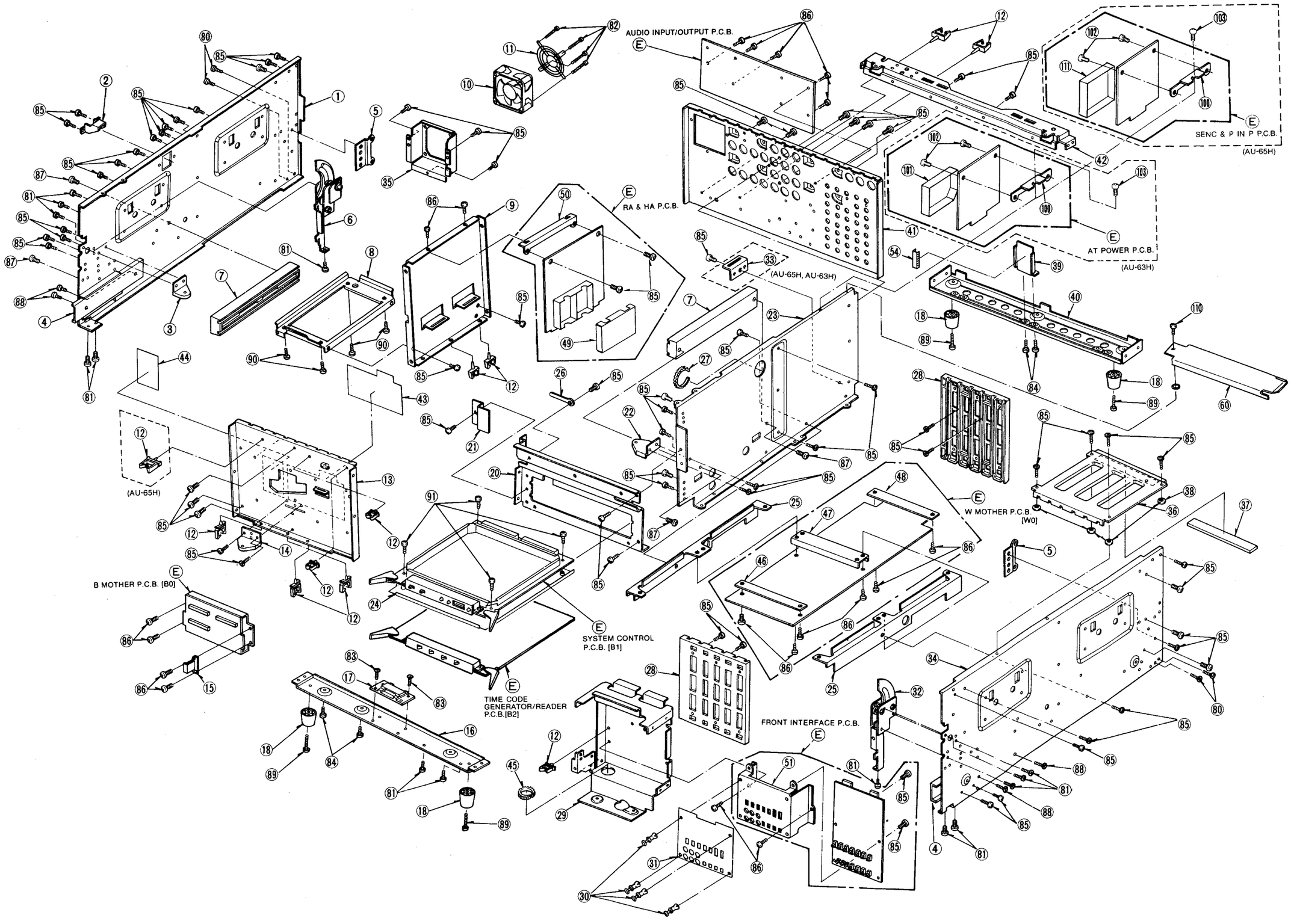

147

CASSETTE COMPARTMENT ASSEMBLY

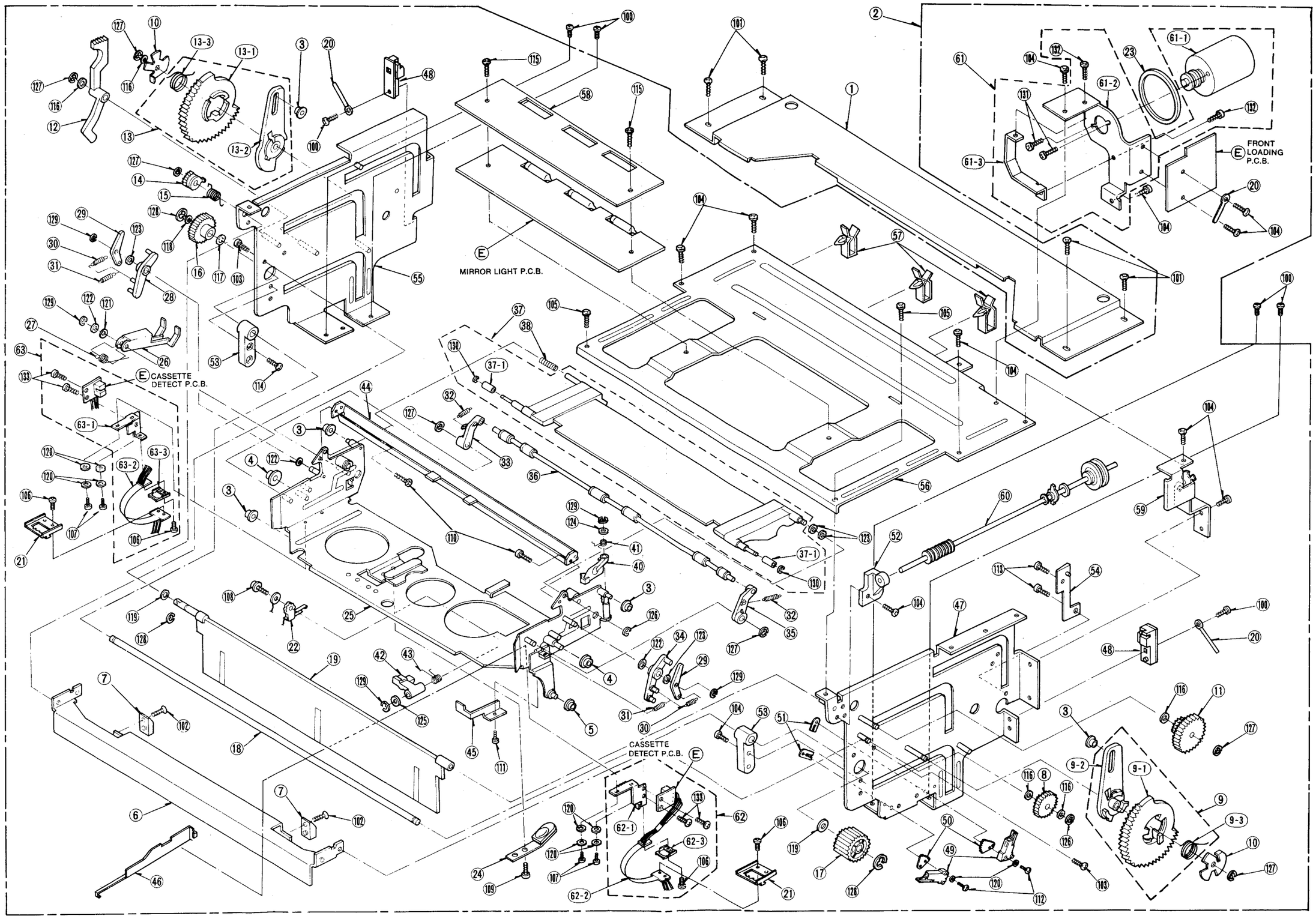

148

CASSETTE COMPARTMENT ASSEMBLY

Ref.No.		Part No.	Part Name & Description	Pcs	Remarks
1		VMA6661	CARRIAGE MOUNT PLATE	1	
2		VXA3756	FRONT LOADING UNIT	1	
3		VDP1020	GUIDE ROLLER (A)	5	
4		VDP1021	GUIDE ROLLER (B)	2	
5		VDP1022	GUIDE ROLLER (C)	1	
6		VMA6639	FRONT GUIDE ANGLE	1	
7		VMD1048	CASSETTE GUIDE	1	
8		VDG0226	RELAY GEAR	1	
9		VXL1315	WIPER (R) UNIT	1	
9-1		VDG0608	WIPER GEAR (R)	1	
9-2		VML1683	WIPER ARM (R)	1	
9-3		VMB1384	WIPER SPRING (R)	1	
10		VMD0748	WIPER SPRING HOLDER	2	
11		VDG0500	WORM GEAR	1	
12		VML1685	PANEL OPENER	1	
13		VXL1922	WIPER (L) UNIT	1	
13-1		VDG0605	WIPER GEAR (L)	1	
13-2		VML2316	WIPER ARM (L)	1	
13-3		VMB1385	WIPER SPRING (L)	1	
14		VDG0231	PANEL GEAR	1	
15		VMB1386	BLINDER PANEL GEAR	1	
16		VDG0603	MAIN SHAFT GEAR (L)	1	
17		VDG0502	MAIN SHAFT GEAR (R)	1	
18		VMS3845	MAIN SHAFT A	1	
19		VYF0589	BLINDER PANEL	1	
20		VJR3	CLAMPER	3	
21		VMD1383	FLAT CABLE HOLDER (LOWER)	2	
22		VSH0026	LEAF SWITCH	1	
23		VDV0157	LOADING BELT	1	
24		VXL1626	CASSETTE KEEPER UNIT	1	
25		VXA2993	CASSETTE HOLDER	1	
26		VXL2065	CASSETTE OPENER UNIT	1	
27		VMB1547	CASSETTE SPRING	1	
28		VML2151	KICK LEVER (L) UNIT	1	
29		VML1681	KICK DRIVE LEVER	2	
30		VMB1380	KICK DRIVE LEVER SPRING	2	
31		VMB1381	KICK LEVER SPRING	2	
32		VMB1382	PRESS LEVER SPRING	2	
33		VML2149	PRESS LEVER (L)	1	
34		VML2150	KICK LEVER (R) UNIT	1	
35		VML2148	PRESS LEVER (R)	1	
36		VXJ0038	PRESS ROLLER SHAFT UNIT	1	
37		VXA2322	MIRROR UNIT	1	
37-1		VDP1023	MIRROR ROLLER	2	
38		VMB1399	MIRROR SPRING	1	
40		VXL1278	RELEASE LEVER UNIT	1	
41		VMB1383	RELEASE LEVER SPRING	1	
42		VML1845	CASSETTE DETECT LEVER	1	
43		VMB1548	CASSETTE DETECT SPRING	1	
44		VMA7000	PRESS ROLLER SHAFT STOPPER	1	
45		VMA7172	FIXING ANGLE	1	
46		VMD1109	CASSETTE GUIDE (R)	1	
47		VXA2317	RIGHT SIDE PLATE (1) UNIT	1	
48		VEK2414	PHOTO TR UNIT	2	
49		VSM0048	SWITCH	2	
50		VMA6663	SWITCH ADJUSTMENT PLATE	2	
51		VMA6664	SWITCH MOUNT PLATE	2	
52		VMD0747	SHAFT BEARING	1	
53		VMD0746	MAIN SHAFT BEARING	2	
54		VMA6637	RELEASE LEVER HOLDER	1	
55		VXA2319	LEFT SIDE PLATE	1	
56		VMA6643	TOP PLATE	1	
57		VGQ0107	MINI-CLAMPER	3	
58		VMZ0729	MIRROR LIGHT P.C.B. COVER	1	
59		VMA6662	WORM SHAFT MOUNT PLATE	1	
60		VXJ0073	WORM SHAFT (1) UNIT	1	
61		VEM0265	FRONT LOADING MOTOR UNIT	1	
61-1		VEM0228	MOTOR UNIT	1	
61-2		VMA6649	LOADING MOTOR MOUNT ANGLE	1	
61-3		VMA6794	BELT COVER	1	
62		VES0351	CASSETTE DETECT (R) UNIT	1	
62-1		VMA6879	SENSOR ANGLE (R)	1	
62-2		VJB80098	FLAT CABLE (R)	1	
62-3		VMD1382	FLAT CABLE HOLDER (UPPER)	1	

Ref.No.		Part No.	Part Name & Description	Pcs	Remarks
63		VES0352	CASSETTE DETECT (L) UNIT	1	
63-1		VMA6880	SENSOR DETECT (L)	1	
63-2		VJB80099	FLAT CABLE (L)	1	
63-3		VMD1382	FLAT CABLE HOLDER (UPPER)	1	
100		XTV3+8F	SCREW	6	
101		XYN3+F6S	SCREW	4	
102		XTS3+6FFZ	SCREW	2	
103		XYN3+C4S	SCREW	2	
104		XTV3+6F	SCREW	12	
105		XTN3+4F	SCREW	2	
106		XYN2+F5	SCREW	4	
107		XYN2+C4	SCREW	3	
108		XYN2+C6	SCREW	1	
109		XYN26+F4FZ	SCREW	1	
110		XYN26+C4	SCREW	2	
111		XYN2+C3	SCREW	1	
112		XSN2+10	SCREW	2	
113		XSN2+3	SCREW	2	
115		XST3+4RS	SCREW	2	
116		XWGV4D7G	WASHER	5	
117		XWGV5Y9G	WASHER	1	
118		XWGV5F8G	WASHER	1	
119		XWGV5D9G	WASHER	2	
120		XWG2	WASHER	10	
121		XWGV3Z6G	WASHER	1	
122		XWGV3Y6G	WASHER	3	
123		XWGV3D6G	WASHER	4	
124		XWE26	WASHER	1	
125		XWGV3D5G	WASHER	1	
126		XUC25FP	E-RING	2	
127		XUC3FP	E-RING	8	
128		XUC4FP	E-RING	3	
129		XUC2FP	E-RING	5	
130		XUC15FP	E-RING	2	
131		XYN3+C4	SCREW	2	
132		XTV26+5F	SCREW	2	
133		XTV26+4F	SCREW	4	

PACKING

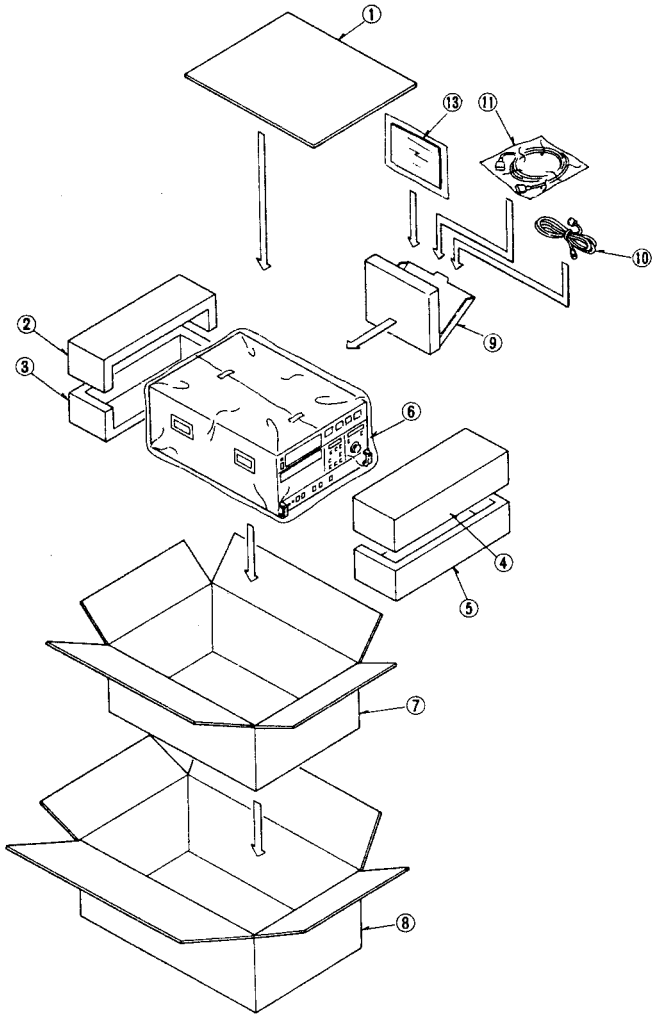

PACKING

Ref.No.		Part No.	Part Name & Description	Pcs	Remarks
1		VPN2698	TOP PAD	1	
2		VPN2665	UPPER REAR CUSHION	1	
3		VPN2697	LOWER REAR CUSHION	1	
4		VPN2664	UPPER FRONT CUSHION	1	
5		VPN2696	LOWER FRONT CUSHION	1	
6		VPF0296	COVER	1	
7		VPG5146	PACKING CASE (IN)	1	
8		VPG5417	PACKING CASE (OUT)	1	
9		VPK1243	ACCESSORIES BOX	1	
10		VJA0173	POWER CODE (E)	1	AU-65HE/63HE/62HE
10		VJA0172	POWER CODE (B)	1	AU-65HB/63HB/62HB
10		VJA0258	POWER CODE (A)	1	AU-65HA/63HA/62HA
11		VJA0716	9P CABLE	1	
13		VQT4633	OPERATING INSTRUCTIONS (ENGLISH)	1	AU-65HE,AU-65HB
13		VQT4655	OPERATING INSTRUCTIONS (GERMAN)	1	AU-65HE
13		VQT4586	OPERATING INSTRUCTIONS (FRENCH)	1	AU-65HE
13		VQT4656	OPERATING INSTRUCTIONS (SPANISH)	1	AU-65HE
13		VQT4641	OPERATING INSTRUCTIONS (ENGLISH)	1	AU-63HE/B,AU-62HE/B
13		VQT4642	OPERATING INSTRUCTIONS (GERMAN)	1	AU-63HE,AU-62HE
13		VQT4587	OPERATING INSTRUCTIONS (FRENCH)	1	AU-63HE,AU-62HE
13		VQT4658	OPERATING INSTRUCTIONS (SPANISH)	1	AU-63HE,AU-62HE

SERVICING FIXTURES & TOOLS LIST

Ref.No.		Part No.	Part Name & Description	Pcs	Remarks
		VFK0293	POST DRIVER	1	
		VFK0357	ECCENTRIC DRIVER (1)	1	
		VFK0358	ECCENTRIC DRIVER (2)	1	
		VFK0359	ECCENTRIC DRIVER (3)	1	
		VFK0446	FINE ADJ. DRIVER	1	
		VFK0363	POST HEIGHT FIXTURE	1	
		VFK66	TENSION GAUGE	1	
		VFK0133	DIAL TORQUE GAUGE	1	
		VFK0134	ADAPTOR FOR VFK0133	1	
		VFK0325	DIAL GAUGE	1	
		VFK0287	HEAD ADJ. PLATE	1	
		VFK0296	RT GAP SPACER	1	
		VFK0326	HEX WRENCH SET	1	
		VFK0343	CHECK LIGHT	1	
		VFK27	HEAD CLEANING STICK	1	
		MOR265	MORLYTON GREASE (BLACK)	1	
		VFK0749	FROIRAL GREASE (WHITE)	1	
		VFK0361	DUMMY PLUG (1)	1	
			LARGE CASSETTE SIMULATION		
		VFK0362	DUMMY PLUG (2)	1	
			SMALL CASSETTE SIMULATION		
		VFK0352	MECH NEUTRAL ADJ. PLATE	1	
		VFK0335	RETAINING REMOVER	1	
		VFK0473	PHILIPS DRIVER (MAGNET)	1	
		VFK0337	PHILIPS DRIVER (LARGE)	1	
		VFK0366	PHILIPS DRIVER (SMALL)	1	
		VFK0367	SCREW DRIVER	1	
		VFK0338	TRIMMER ADJ. DRIVER	1	
		VFK0368	CORE ADJ. DRIVER	1	
		VFK0369	TWEEZERS	1	
		VFK0370	NUT DRIVER (5.5m/m)	1	
		VFK0371	RADIO PRIER	1	
		VFK0372	CUTTER PRIER	1	
		VFK0355A	TOOL BOX CASE	1	
		VFK0438	P2 POST ADJ. FIXTURE	1	
		VFK0470	EXTENSION CABLE SET	1	
		VFM7089EAG	ALIGNMENT TAPE (NTSC)	1	(LARGE SIZE)
		VFM7189EG	ALIGNMENT TAPE (PAL)	1	(LARGE SIZE)
		VFK0132	BACK TENSION METER	1	
		VFK0600	W EXTENDER	1	
		VFK0601	B EXTENDER	1	
		VFK0676	NUT DRIVER (7m/m)	1	

Order No. VSD9804S501

Technical Bulletin

Supplement to the Service Manual

MII Video Product

Subject : Correction in Part Number List

Please use this supplement together with the Service Manual as follows :

Model No.	Bulletin No.	Order No.	Effective from
AU-65E	160	VQS0264	First Production
AU-665E	138	VQS0270	First Production
AU-65HE	96	VSD9204M501	First Production
AU-66HE	70	VSD9208M502	First Production

FRONT PANEL ASSEMBLY

Interchangeability Code (I/C)

A	Original or new parts may be used in early or late production set. Use original parts until exhausted, then stock new parts.
B	Original parts may be used in early production sets only. New parts may be used in early or late production sets. Use original parts possible then stock new parts.
C	New parts only may be used in early or late production sets.
D	Original parts may be used in early or late production sets only. New parts may be used in late production sets only. Stock both original and new parts.
E	Others

Part Number

Ref. No.	Original Part No.	New Part No.	Part Name & Descriptions	Pcs	I/C	Remarks
28-2	VGU4116	VGU4115	EDIT SET BUTTON	1		
28-2	VGU4115	VGU4116	GO-TO BUTTON	1		

TZZ-0070

Panasonic

© 1998 Matsushita Electric Industrial Co., Ltd. All rights reserved.
Unauthorized copying and distribution is a violation of law.

MODULES

- Block Diagrams
- Schematic Diagrams
- Printed Circuit Boards

This section provides the block diagrams, schematic diagrams and printed circuit boards.

N o t e :

1. Do not use the part numbers shown on the schematic diagram or P.C.Board layout for ordering.
   The correct part number for ordering is shown in the Exploded View/Parts List section.
2. Unless otherwise specified, all resistors are in OHMS, K = 1,000 OHMS, all capacitors are in MICROFARADS (uF), P = uuF.
3. The foil paterns on the P.C.Board layout, printed with the blue color is the component side.
4. Please refer to the Electrical Parts List for the value and existance of component parts on the P.C.Board.

Panasonic

CONTENTS

BLOCK DIAGRAM
OVER ALL BLOCK DIAGRAM
(FOR AU-665 NTSC) 5-1-1
OVER ALL BLOCK DIAGRAM(FOR AU-65) .. 5-1-2
OVER ALL BLOCK DIAGRAM(FOR AU-63) .. 5-1-3
OVER ALL BLOCK DIAGRAM(FOR AU-62) .. 5-1-4
W1 (TBC & SYNC GEN) BLOCK DIAGRAM
1/3 (FOR AU-65, AU-63, AU-62) 5-1-5
W1 (TBC & SYNC GEN) BLOCK DIAGRAM
2/3 (FOR AU-65, AU-63, AU-62) 5-1-6
W1 (TBC & SYNC GEN) BLOCK DIAGRAM
3/3 (FOR AU-65, AU-63, AU-62) 5-1-7
W1 (TBC & SYNC GEN) BLOCK DIAGRAM
1/3 (FOR AU-665 NTSC) 5-1-8
W1 (TBC & SYNC GEN) BLOCK DIAGRAM
2/3 (FOR AU-665 NTSC) 5-1-9
W1 (TBC & SYNC GEN) BLOCK DIAGRAM
3/3 (FOR AU-665 NTSC) 5-1-10
W2 SUB (9BIT A/D) BLOCK DIAGRAM
(FOR AU-665) 5-1-11
W2 (ENCODER) BLOCK DIAGRAM 1/3 5-1-11
W2 (ENCODER) BLOCK DIAGRAM 2/3 5-1-12
W2 (ENCODER) BLOCK DIAGRAM 3/3 5-1-13
W3 (MOD & DEMOD) BLOCK DIAGRAM 1/3.. 5-1-14
W3 (MOD & DEMOD) BLOCK DIAGRAM 2/3.. 5-1-15
W3 (MOD & DEMOD) BLOCK DIAGRAM 3/3.. 5-1-16
W4 (DEC & CTCM) BLOCK DIAGRAM 1/4
(FOR AU-65, AU-665 NTSC) 5-1-17
W4 (DEC & CTCM) BLOCK DIAGRAM 2/4
(FOR AU-65, AU-665 NTSC) 5-1-18
W4 (DEC & CTCM) BLOCK DIAGRAM 3/4
(FOR AU-65, AU-665 NTSC) 5-1-19
W4 (DEC & CTCM) BLOCK DIAGRAM 4/4
(FOR AU-65, AU-665 NTSC) 5-1-20
W5 (SERVO) BLOCK DIAGRAM 1/6 5-1-21
W5 (SERVO) BLOCK DIAGRAM 2/6 5-1-22
W5 (SERVO) BLOCK DIAGRAM 3/6 5-1-23
W5 (SERVO) BLOCK DIAGRAM 4/6 5-1-24
W5 (SERVO) BLOCK DIAGRAM 5/6 5-1-25
W5 (SERVO) BLOCK DIAGRAM 6/6
(FOR AU-665, AU-63) 5-1-26
W6 (AUDIO) BLOCK DIAGRAM 1/4 5-1-27
W6 (AUDIO) BLOCK DIAGRAM 2/4 5-1-28
W6 (AUDIO) BLOCK DIAGRAM 3/4
(FOR AU-760) 5-1-28
W6 (AUDIO) BLOCK DIAGRAM 4/4 5-1-29
B1 (SYSTEM CONTROL) BLOCK DIAGRAM
1/3 5-1-30
B1 (SYSTEM CONTROL) BLOCK DIAGRAM
2/3 5-1-31
B1 (SYSTEM CONTROL) BLOCK DIAGRAM
3/3 5-1-32
B2 (TC & BB) BLOCK DIAGRAM 1/2
(FOR AU-665) 5-1-33
B2 (TC & BB) BLOCK DIAGRAM 2/2
(FOR AU-665) 5-1-34
AT POWER BLOCK DIAGRAM
(FOR AU-665, AU-63) 5-1-35
AUDIO I/O BLOCK DIAGRAM 5-1-35
AUDIO VR BLOCK DIAGRAM (FOR AU-665).. 5-1-36
AUDIO VR BLOCK DIAGRAM
(FOR AU-65, AU-63, AU-62) 5-1-36
FRONT PANEL A,B,C BLOCK DIAGRAM
(FOR AU-665) 5-1-37
FRONT PANEL A,B,C BLOCK DIAGRAM
(FOR AU-65) 5-1-38
FRONT PANEL A,C BLOCK DIAGRAM
(FOR AU-63, AU-62) 5-1-39
FRONT SW & VR BLOCK DIAGRAM
(FOR AU-665) 5-1-40
RA & HA BLOCK DIAGRAM 5-1-41
VIDEO I/O BLOCK DIAGRAM 1/2
(FOR AU-665) 5-1-42
VIDEO I/O BLOCK DIAGRAM 2/2
(FOR AU-665) 5-1-43
VIDEO I/O BLOCK DIAGRAM 1/2
(FOR AU-65, AU-63, AU-62) 5-1-44
VIDEO I/O BLOCK DIAGRAM 2/2
(FOR AU-65, AU-63, AU-62) 5-1-44
SCHEMATIC DIAGRAM
CN NO. INFORMATION 5-2-1
INTERCONNECTION 1/3 5-2-2
INTERCONNECTION 2/3 5-2-3
INTERCONNECTION 3/3 5-2-3
W0 (W, MOTHER) SCHEMATIC DIAGRAM
1/4 5-2-4
W0 (W, MOTHER) SCHEMATIC DIAGRAM
2/4 5-2-4
W0 (W, MOTHER) SCHEMATIC DIAGRAM
3/4 5-2-5
W0 (W, MOTHER) SCHEMATIC DIAGRAM
4/4 5-2-5
W1 (TBC & SYNC GEN) SCHEMATIC
DIAGRAM 1/6 (FOR AU-65,AU-63,AU-62) 5-2-6
W1 (TBC & SYNC GEN) SCHEMATIC
DIAGRAM 2/6 (FOR AU-65,AU-63,AU-62) 5-2-6
W1 (TBC & SYNC GEN) SCHEMATIC
DIAGRAM 3/6 (FOR AU-65,AU-63,AU-62) 5-2-7
W1 (TBC & SYNC GEN) SCHEMATIC
DIAGRAM 4/6 (FOR AU-65,AU-63,AU-62) 5-2-7

W1 (TBC & SYNC GEN) SCHEMATIC DIAGRAM 5/6 (FOR AU-65, AU-63, AU-62) 5-2-8
W1 (TBC & SYNC GEN) SCHEMATIC DIAGRAM 6/6 (FOR AU-65, AU-63, AU-62) 5-2-8
W1 SUB SCHEMATIC DIAGRAM (FOR AU-665 NTSC) 5-2-9
W1 (TBC & SYNC GEN) SCHEMATIC DIAGRAM 1/6 (FOR AU-665 NTSC) 5-2-9
W1 (TBC & SYNC GEN) SCHEMATIC DIAGRAM 2/6 (FOR AU-665 NTSC) 5-2-10
W1 (TBC & SYNC GEN) SCHEMATIC DIAGRAM 3/6 (FOR AU-665 NTSC) 5-2-10
W1 (TBC & SYNC GEN) SCHEMATIC DIAGRAM 4/6 (FOR AU-665 NTSC) 5-2-11
W1 (TBC & SYNC GEN) SCHEMATIC DIAGRAM 5/6 (FOR AU-665 NTSC) 5-2-11
W1 (TBC & SYNC GEN) SCHEMATIC DIAGRAM 6/6 (FOR AU-665 NTSC) 5-2-12
W2 SUB (9BIT A/D) SCHEMATIC DIAGRAM (FOR AU-665) 5-2-13
W2 (ENCODER) SCHEMATIC DIAGRAM 1/4 . 5-2-13
W2 (ENCODER) SCHEMATIC DIAGRAM 2/4 . 5-2-13
W2 (ENCODER) SCHEMAUIC DIAGRAM 3/4 . 5-2-14
W2 (ENCODER) SCHEMATIC DIAGRAM 4/4 (FOR AU-665) 5-2-14
W3 (MOD & DEMOD) SCHEMATIC DIAGRAM 1/5 5-2-15
W3 (MOD & DEMOD) SCHEMATIC DIAGRAM 2/5 5-2-15
W3 (MOD & DEMOD) SCHEMATIC DIAGRAM 3/5 5-2-16
W3 (MOD & DEMOD) SCHEMATIC DIAGRAM 4/5 5-2-16
W3 (MOD & DEMOD) SCHEMATIC DIAGRAM 5/5 5-2-16
W4 (DECODER & CTCM) SCHEMATIC DIAGRAM 1/4 (FOR AU-665 NTSC, AU-65) ... 5-2-17
W4 (DECODER & CTCM) SCHEMATIC DIAGRAM 2/4 (FOR AU-665 NTSC, AU-65) ... 5-2-17
W4 (DECODER & CTCM) SCHEMATIC DIAGRAM 3/4 (FOR AU-665 NTSC, AU-65) ... 5-2-18
W4 (DECODER & CTCM) SCHEMATIC DIAGRAM 4/4 (FOR AU-665 NTSC, AU-65) ... 5-2-18
W5 (SERVO) BLOCK DIAGRAM 1/8 (DRUM SERVO) 5-2-19
W5 (SERVO) BLOCK DIAGRAM 2/8 (HSW, S/P) 5-2-19
W5 (SERVO) BLOCK DIAGRAM 3/8 (CAPSTAN SERVO) 5-2-20
W5 (SERVO) BLOCK DIAGRAM 4/8 (I/O CTL CMP) 5-2-20
W5 (SERVO) BLOCK DIAGRAM 5/8 (REEL SERVO) 5-2-21
W5 (SERVO) BLOCK DIAGRAM 6/8 (SERVO DRIVE) 5-2-21
W5 (SERVO) BLOCK DIAGRAM 7/8 (AUTO TRACKING 1)(FOR AU-665, AU-63) ... 5-2-22
W5 (SERVO) BLOCK DIAGRAM 8/8 (AUTO TRACKING 2)(FOR AU-665, AU-63) ... 5-2-22
W6 (AUDIO) SCHEMATIC DIAGRAM 1/5 (LINEAR AUDIO) 5-2-23
W6 (AUDIO) SCHEMATIC DIAGRAM 2/5 (REC, TC) 5-2-23
W6 (AUDIO) SCHEMATIC DIAGRAM 3/5 (CONFI) 5-2-24
W6 (AUDIO) SCHEMATIC DIAGRAM 4/5 (EXT NR) (FOR AU-665 PAL) 5-2-24
W6 (AUDIO) SCHEMATIC DIAGRAM 5/5 (FM AUDIO) 5-2-25
B0 (B, MOTHER) SCHEMATIC DIAGRAM 1/2 .. 5-2-26
B0 (B, MOTHER) SCHEMATIC DIAGRAM 2/2 .. 5-2-27
B1 (SYSTEM CONTROL) SCHEMATIC DIAGRAM 1/6 5-2-28
B1 (SYSTEM CONTROL) SCHEMATIC DIAGRAM 2/6 5-2-29
B1 (SYSTEM CONTROL) SCHEMATIC DIAGRAM 3/6 5-2-29
B1 (SYSTEM CONTROL) SCHEMATIC DIAGRAM 4/6 5-2-30
B1 (SYSTEM CONTROL) SCHEMATIC DIAGRAM 5/6 5-2-30
B1 (SYSTEM CONTROL) SCHEMATIC DIAGRAM 6/6 5-2-31
B2 (TCG/TCR) SCHEMATIC DIAGRAM 1/2 (FOR AU-665) 5-2-32
B2 (TCG/TCR) SCHEMATIC DIAGRAM 2/2 (FOR AU-665) 5-2-33
B2 (TCG/TCR) SCHEMATIC DIAGRAM (FOR AU-665) 5-2-33
A. T H. A SCHEMATIC DIAGRAM (FOR AU-665) 5-2-34
AT POWER SCHEMATIC DIAGRAM (FOR AU-665, AU-63) 5-2-34
AUDIO I/O SCHEMATIC DIAGRAM 1/2..... 5-2-35
AUDIO I/O SCHEMATIC DIAGRAM 2/2 5-2-35
AUDIO I/O (SUB) SCHEMATIC DIAGRAM... 5-2-35
AUDIO INPUT SW SCHEMATIC DIAGRAM (FOR AU-665) 5-2-36
AUDIO VR SCHEMATIC DIAGRAM (FOR AU-665) 5-2-36
AUDIO VR SCHEMATIC DIAGRAM (FOR AU-65, AU-63, AU-62)..... 5-2-36

FRONT INTERFACE SCHEMATIC DIAGRAM (FOR AU-665) 5-2-37
FRONT INTERFACE SCHEMATIC DIAGRAM (FOR AU-65, AU-63, AU-62) 5-2-37
FRONT MODE SELECT SCHEMATIC DIAGRAM 5-2-38
FRONT PANEL A SCHEMATIC DIAGRAM (FOR AU-665 NTSC) 5-2-38
FRONT PANEL A SCHEMATIC DIAGRAM (FOR AU-65) 5-2-39
FRONT PANEL A SCHEMATIC DIAGRAM (FOR AU-63, AU-62) 5-2-39
FRONT PANEL B SCHEMATIC DIAGRAM (FOR AU-665, AU-65) 5-2-40
FRONT PANEL C SCHEMATIC DIAGRAM (FOR AU-665) 5-2-40
FRONT PANEL C SCHEMATIC DIAGRAM (FOR AU-65) 5-2-41
FRONT PANEL C SCHEMATIC DIAGRAM (FOR AU-63, AU-62) 5-2-42
FRONT SW & VR SCHEMATIC DIAGRAM (FOR AU-665) 5-2-43
FRONT SW & VR SCHEMATIC DIAGRAM (FOR AU-65, AU-63, AU-62) 5-2-43
MECHA INTERFACE SCHEMATIC DIAGRAM 5-2-44
POWER FILTER SCHEMATIC DIAGRAM ... 5-2-44
POWER SCHEMATIC DIAGRAM 5-2-45
RA/HA SCHEMATIC DIAGRAM 5-2-46
VIDEO I/O SCHEMATIC DIAGRAM (FOR AU-665) 5-2-47
VIDEO I/O SCHEMATIC DIAGRAM (FOR AU-65, AU-63, AU-62) 5-2-47
VIDEO VR SCHEMATIC DIAGRAM (FOR AU-665) 5-2-48
50P REMOTE SCHEMATIC DIAGRAM (FOR AU-665) 5-2-48
9P REMOTE SCHEMATIC DIAGRAM 5-2-48
Y/C IN/OUT SCHEMATIC DIAGRAM 5-2-48

P.C.BOARD

W0 (MOTHER 1) P.C.BOARD 5-3-1
W1 (TBC & SYNC GEN) P.C.BOARD (FOR AU-65, AU-63, AU-62) 5-3-2
W1 (TBC & SYNC GEN) P.C.BOARD (FOR AU-665) 5-3-5
W1 SUB P.C.BOARD 5-3-5
W2 SUB (9BIT A/D) P.C.BOARD 5-3-6
W2 SUB (SC) P.C.BOARD 5-3-6
W2 (ENCODER) P.C.BOARD 5-3-6
W3 (MOD & DEMOD) P.C.BOARD 5-3-9
W3 SUB P.C.BOARD 5-3-9
W3 SUB (Y DO BLK) P.C.BOARD 5-3-9
W3 SUB (C DO BLK) P.C.BOARD 5-3-9
W4 (DECODER & CTCM) P.C.BOARD 5-3-10
W5 (SERVO) P.C.BOARD 5-3-13
W6 SUB (TC TRAP) P.C.BOARD 5-3-14
W6 SUB (SPOT ERASE) P.C.BOARD 5-3-14
W6 (AUDIO) P.C.BOARD 5-3-15
B0 (MOTHER 2) P.C.BOARD 5-3-16
B1 (SYSTEM CONTROL) P.C.BOARD 5-3-16
B2 (TC & BB) P.C.BOARD 5-3-17
AT H.A P.C.BOARD 5-3-18
AT POWER P.C.BOARD 5-3-18
AUDIO I/O P.C.BOARD 5-3-18
AUDIO I/O SUB P.C.BOARD 5-3-18
AUDIO VR P.C.BOARD (FOR AU-665) 5-3-19
AUDIO VR P.C.BOARD (FOR AU-65, AU-63, AU-62) 5-3-19
AUDIO INPUT SW P.C.BOARD 5-3-19
AUTO OFF LED P.C.BOARD 5-3-19
CASSETTE CARRIAGE LAMP P.C.BOARD .. 5-3-19
CASSETTE DETECT P.C.BOARD 5-3-19
EJECT INTER P.C.BOARD 5-3-19
EJECT SW P.C.BOARD 5-3-19
FRONT MODE SELECT CIRCUIT P.C.BOARD 5-3-19
FRONT INTERFACE P.C.BOARD (FOR AU-665) 5-3-20
FRONT INTERFACE P.C.BOARD (FOR AU-65, AU-63, AU-62) 5-3-20
FRONT PANEL A P.C.BOARD (FOR AU-665) 5-3-21
FRONT PANEL A P.C.BOARD (FOR AU-65) 5-3-21
FRONT PANEL A P.C.BOARD (FOR AU-63, AU-62) 5-3-22
FRONT PANEL C P.C.BOARD (FOR AU-63, AU-62) 5-3-22
FRONT PANEL B P.C.BOARD (FOR AU-665, AU-65) 5-3-23
FRONT PANEL C P.C.BOARD (FOR AU-665) 5-3-23
FRONT PANEL C P.C.BOARD (FOR AU-65) 5-3-23
FRONT SW VR P.C.BOARD (FOR AU-665) 5-3-24
FRONT SW VR P.C.BOARD (FOR AU-65, AU-63, AU-62) 5-3-24
FRONT LOADING P.C.BOARD 5-3-24
HEADPHONE VR P.C.BOARD (FOR NTSC) . 5-3-24
HEADPHONE VR P.C.BOARD (FOR PAL) ... 5-3-24
LOADING PHOTO P.C.BOARD 5-3-24
MECHA INTERFACE P.C.BOARD 5-3-24

FRONT INTERFACE SCHEMATIC DIAGRAM (FOR AU-665) 5-2-37
FRONT INTERFACE SCHEMATIC DIAGRAM (FOR AU-65, AU-63, AU-62) 5-2-37
FRONT MODE SELECT SCHEMATIC DIAGRAM 5-2-38
FRONT PANEL A SCHEMATIC DIAGRAM (FOR AU-665 NTSC) 5-2-38
FRONT PANEL A SCHEMATIC DIAGRAM (FOR AU-65) 5-2-39
FRONT PANEL A SCHEMATIC DIAGRAM (FOR AU-63, AU-62) 5-2-39
FRONT PANEL B SCHEMATIC DIAGRAM (FOR AU-665, AU-65) 5-2-40
FRONT PANEL C SCHEMATIC DIAGRAM (FOR AU-665) 5-2-40
FRONT PANEL C SCHEMATIC DIAGRAM (FOR AU-65) 5-2-41
FRONT PANEL C SCHEMATIC DIAGRAM (FOR AU-63, AU-62) 5-2-42
FRONT SW & VR SCHEMATIC DIAGRAM (FOR AU-665) 5-2-43
FRONT SW & VR SCHEMATIC DIAGRAM (FOR AU-65, AU-63, AU-62) 5-2-43
MECHA INTERFACE SCHEMATIC DIAGRAM 5-2-44
POWER FILTER SCHEMATIC DIAGRAM ... 5-2-44
POWER SCHEMATIC DIAGRAM 5-2-45
RA/HA SCHEMATIC DIAGRAM 5-2-46
VIDEO I/O SCHEMATIC DIAGRAM (FOR AU-665) 5-2-47
VIDEO I/O SCHEMATIC DIAGRAM (FOR AU-65, AU-63, AU-62) 5-2-47
VIDEO VR SCHEMATIC DIAGRAM (FOR AU-665) 5-2-48
50P REMOTE SCHEMATIC DIAGRAM (FOR AU-665) 5-2-48
9P REMOTE SCHEMATIC DIAGRAM 5-2-48
Y/C IN/OUT SCHEMATIC DIAGRAM 5-2-48
P.C.BOARD
W0 (MOTHER 1) P.C.BOARD 5-3-1
W1 (TBC & SYNC GEN) P.C.BOARD (FOR AU-65, AU-63, AU-62) 5-3-2
W1 (TBC & SYNC GEN) P.C.BOARD (FOR AU-665) 5-3-5
W1 SUB P.C.BOARD 5-3-5
W2 SUB (9BIT A/D) P.C.BOARD 5-3-6
W2 SUB (SC) P.C.BOARD 5-3-6
W2 (ENCODER) P.C.BOARD 5-3-6
W3 (MOD & DEMOD) P.C.BOARD 5-3-9
W3 SUB P.C.BOARD 5-3-9
W3 SUB (Y DO BLK) P.C.BOARD 5-3-9
W3 SUB (C DO BLK) P.C.BOARD 5-3-9
W4 (DECODER & CTCM) P.C.BOARD 5-3-10
W5 (SERVO) P.C.BOARD 5-3-13
W6 SUB (TC TRAP) P.C.BOARD 5-3-14
W6 SUB (SPOT ERASE) P.C.BOARD 5-3-14
W6 (AUDIO) P.C.BOARD 5-3-15
B0 (MOTHER 2) P.C.BOARD 5-3-16
B1 (SYSTEM CONTROL) P.C.BOARD 5-3-16
B2 (TC & BB) P.C.BOARD 5-3-17
AT H.A P.C.BOARD 5-3-18
AT POWER P.C.BOARD 5-3-18
AUDIO I/O P.C.BOARD 5-3-18
AUDIO I/O SUB P.C.BOARD 5-3-18
AUDIO VR P.C.BOARD (FOR AU-665) 5-3-19
AUDIO VR P.C.BOARD (FOR AU-65, AU-63, AU-62) 5-3-19
AUDIO INPUT SW P.C.BOARD 5-3-19
AUTO OFF LED P.C.BOARD 5-3-19
CASSETTE CARRIAGE LAMP P.C.BOARD .. 5-3-19
CASSETTE DETECT P.C.BOARD 5-3-19
EJECT INTER P.C.BOARD 5-3-19
EJECT SW P.C.BOARD 5-3-19
FRONT MODE SELECT CIRCUIT P.C.BOARD 5-3-19
FRONT INTERFACE P.C.BOARD (FOR AU-665) 5-3-20
FRONT INTERFACE P.C.BOARD (FOR AU-65, AU-63, AU-62) 5-3-20
FRONT PANEL A P.C.BOARD (FOR AU-665) 5-3-21
FRONT PANEL A P.C.BOARD (FOR AU-65) 5-3-21
FRONT PANEL A P.C.BOARD (FOR AU-63, AU-62) 5-3-22
FRONT PANEL C P.C.BOARD (FOR AU-63, AU-62) 5-3-22
FRONT PANEL B P.C.BOARD (FOR AU-665, AU-65) 5-3-23
FRONT PANEL C P.C.BOARD (FOR AU-665) 5-3-23
FRONT PANEL C P.C.BOARD (FOR AU-65) 5-3-23
FRONT SW VR P.C.BOARD (FOR AU-665) 5-3-24
FRONT SW VR P.C.BOARD (FOR AU-65, AU-63, AU-62) 5-3-24
FRONT LOADING P.C.BOARD 5-3-24
HEADPHONE VR P.C.BOARD (FOR NTSC) . 5-3-24
HEADPHONE VR P.C.BOARD (FOR PAL) ... 5-3-24
LOADING PHOTO P.C.BOARD 5-3-24
MECHA INTERFACE P.C.BOARD 5-3-24

METER LAMP P.C.BOARD 5-3-24
POWER SUPPLY A P.C.BOARD 5-3-25
POWER SUPPLY B P.C.BOARD 5-3-25
POWER FILTER P.C.BOARD (FOR NTSC) .. 5-3-25
POWER FILTER P.C.BOARD (FOR PAL) 5-3-25
RA, HA P.C.BOARD 5-3-25
TR SENSOR(1) P.C.BOARD 5-3-26
TR SENSOR(2) P.C.BOARD 5-3-26
UNLOADING PHOTO P.C.BOARD 5-3-26
VIDEO I/O P.C.BOARD (FOR AU-665) 5-3-26
VIDEO I/O P.C.BOARD
(FOR AU-65, AU-63, AU-62) 5-3-26
VIDEO VR P.C.BOARD 5-3-26
VIDEO CH4 P.C.BOARD 5-3-26
Y/C IN/OUT P.C.BOARD 5-3-26
50P REMOTE P.C.BOARD 5-3-26
9P REMOTE P.C.BOARD 5-3-26
W1 (TBC & SYNC GEN) WAVEFORMS
FOR NTSC 5-3-27
W2 (ENCODER) WAVEFORMS
FOR NTSC 5-3-27
W3 (MOD & DEMOD) WAVEFORMS
FOR NTSC 5-3-27
W4 (DECODER & CTCM) WAVEFORMS
FOR NTSC 5-3-28
W5 (SERVO) WAVEFORMS FOR NTSC 5-3-28
W6 (AUDIO) WAVEFORMS FOR NTSC 5-3-28
B2 (TC & BB) WAVEFORMS FOR NTSC 5-3-29
RA & HA WAVEFORMS FOR NTSC 5-3-29
AT POWER WAVEFORMS FOR NTSC 5-3-29
W1 (TBC & SYNC GEN) WAVEFORMS
FOR PAL 5-3-29
W2 (ENCODER) WAVEFORMS
FOR PAL 5-3-30
W3 (MOD & DEMOD) WAVEFORMS
FOR PAL 5-3-30
W4 (DECODER & CTCM) WAVEFORMS
FOR PAL 5-3-30
W5 (SERVO) WAVEFORMS FOR PAL 5-3-31
W6 (AUDIO) WAVEFORMS FOR PAL 5-3-31
B2 (TC & BB) WAVEFORMS
FOR PAL 5-3-32
RA & HA WAVEFORMS FOR PAL 5-3-32

P.C.BOARD LIST

P.C.BOARD NAME	VEP NUMBER (AU-65 NTSC)	VEP NUMBER (AU-63 NTSC)	VEP NUMBER (AU-62 NTSC)	VEP NUMBER (AU-665 NTSC)	VEP NUMBER (AU-65 PAL)	VEP NUMBER (AU-63 PAL)	VEP NUMBER (AU-62 PAL)
1. W0 MOTHER 1	VEP80548A	VEP80548D	VEP80548C	VEP80548B	VEP80548A	VEP80548D	VEP80548C
2. W1 TBC & SYNC GEN	VEP88062A	VEP88062A	VEP88062A	VEP88077A	VEP88062C	VEP88062C	VEP88062C
3. W1 SUB	----------	----------	----------	└ VEP80666A	----------	----------	----------
4. W2 ENCODER	VEP88063A	VEP88063A	VEP88063A	VEP88063B	VEP88063C	VEP88063C	VEP88063C
5. W2 SUB 9BIT A/D	----------	----------	----------	└ VEP80569A	└ VEP80632A	└ VEP80632A	└ VEP80632
6. W3 MOD & DEMOD	VEP83098A	VEP83098A	VEP83098A	VEP83098B	VEP83098E	VEP83098F	VEP83098G
7. W3 SUB Y DO BLK	----------	----------	----------	├ VEP80646A	----------	----------	----------
8. W3 SUB C DO BLK	----------	----------	----------	└ VEP80647A	----------	----------	----------
9. W3 SUB	----------	----------	----------	----------	└ VEP80667	----------	----------
10. W4 DEC & CTCM	VEP83099A	----------	----------	VEP83099A	VEP83099B	----------	----------
11. W5 SERVO	VEP82061A	VEP82061D	VEP82061C	VEP82061B	VEP82061E	VEP82061F	VEP82061E
12. W6 AUDIO	VEP84095A	VEP84095C	VEP84095C	VEP84095B	VEP84095D	VEP84095E	VEP84095E
13. W6 SUB SPOT ERASE	└ VEP80635A	----------	----------	├ VEP80664A	----------	----------	----------
14. W6 SUB TC TRAP	----------	----------	----------	└ VEP80635A	└ VEP80635A	----------	----------
15. B0 MOTHER 2	VEP80549A	VEP80549B	VEP80549C	VEP80549B	VEP80549A	VEP80549B	VEP80549A
16. B1 SYSTEM CONTROL	VEP86088A	VEP86088D	VEP86088C	VEP86088B	VEP86088E	VEP86088F	VEP86088M
17. B2 (TC & BB)	----------	----------	----------	VEP86089B	----------	----------	----------
18. AT H.A	----------	----------	----------	VEP85018A	----------	----------	----------
19. AT POWER	----------	VEP82062A	----------	VEP82062A	----------	VEP82062A	----------
20. AUDIO INPUT SW	----------	----------	----------	VEP84094B	----------	----------	----------
21. AUDIO IN/OUT	VEP84094A	VEP84094C	VEP84094C	VEP84094B	VEP84094A	VEP84094C	VEP84094C
22. AUDIO IN/OUT SUB	└ VEP80573A	└ VEP80573A	└ VEP80573A	└ VEP80573A	└ VEP80573A	└ VEP80573A	└ VEP80573
23. AUTO OFF LED	VEP00E08C	VEP00E08C	VEP00E08C	VEP00E08C	VEP00E08C	VEP00E08C	VEP00E08C
24. AUDIO VR	VEP84101A	VEP84101C	VEP84101B	VEP84102A	VEP84101A	VEP84101C	VEP84101B
25. CASSETTE CARRIAGE LAMP	VEP00E72A	VEP00E72A	VEP00E72A	VEP00E72A	VEP00E72A	VEP00E72A	VEP00E72A
26. CASSETTE DETEG	VEP00E30A	VEP00E30A	VEP00E30A	VEP00E30A	VEP00E30A	VEP00E30A	VEP00E30A
27. EJECT INTERFACE	VEP80422B	VEP80422B	VEP80422B	VEP80422B	VEP80422B	VEP80422B	VEP80422B
28. EJECT SW	VEP80232A	VEP80232A	VEP80232A	VEP80232A	VEP80232A	VEP80232A	VEP80232A
29. FRONT INTERFACE	VEP80553A	VEP80553C	VEP80553B	VEP80612A	VEP80631A	VEP80631B	VEP80631C
30. FRONT LOADING	VEP80440A	VEP80440A	VEP80440A	VEP80440A	VEP80440A	VEP80440A	VEP80440A
31. FRONT MODE SELECT	VEP80559A	VEP80559D	VEP80559C	VEP80559B	VEP80559A	VEP80559D	VEP80559C
32. FRONT PANEL A	VEP86050C	VEP86086A	VEP86086A	VEP66052C	VEP86050D	VEP86086A	VEP86086A
33. FRONT PANEL B	VEP66022A	VEP86076C	VEP86076C	VEP66022A	VEP66022A	VEP86076D	VEP86076D
34. FRONT PANEL C	VEP86048F	----------	----------	VEP66053E	VEP86048C	----------	----------
35. FRONT SW VR	VEP80552A	VEP80552A	VEP80552A	VEP80613A	VEP80552A	VEP80552A	VEP80552A
36. HEADPHONE VR	VEP80108A	VEP80108A	VEP80108A	VEP80108A	VEP80616A	VEP80616A	VEP80616A
37. LOADING PHOTO	VEP00E04B	VEP00E04B	VEP00E04B	VEP00E04B	VEP00E04B	VEP00E04B	VEP00E04B
38. MECHA INTERFACE CIRCUIT	VEP80550A	VEP80550A	VEP80550A	VEP80550A	VEP80550A	VEP80550A	VEP80550A
39. METER LAMP	VEP80333B	VEP80333B	VEP80333B	VEP80333C	VEP80333A	VEP80333B	VEP80333B
40. POWER FILTER	VEP81042A	VEP81042A	VEP81042A	VEP81042A	VEP81058A	VEP81058A	VEP81058A
41. POWER SUPPLY UNIT	VYK3004	VYK3004	VYK3004	VYK3004	VYK3637	VYK3637	VYK3637
42. RA & HA	VEP85015A	VEP85015C	VEP85015B	VEP85015A	VEP85015D	VEP85015F	VEP85015E
43. TR SENSOR (1)	VEP00E27C	VEP00E27C	VEP00E27C	VEP00E27C	VEP00E27C	VEP00E27C	VEP00E27C
44. TR SENSOR (2)	VEP00E28C	VEP00E28C	VEP00E28C	VEP00E28C	VEP00E28C	VEP00E28C	VEP00E28C
45. UNLOADING PHOTO	VEP00E25C	VEP00E25C	VEP00E25C	VEP00E25C	VEP00E25C	VEP00E25C	VEP00E25C
46. VIDEO/CH4 METER SW	----------	----------	----------	VEP80083B	----------	----------	----------
47. VIDEO I/O	VEP83097A	VEP83097B	VEP83097B	VEP83104A	VEP83097C	VEP83097B	VEP83097B
48. VIDEO VR	----------	----------	----------	VEP80621A	----------	----------	----------
49. YC IN/OUT	VEP80574A	VEP80574A	VEP80574A	VEP80574A	VEP80574A	VEP80574A	VEP80574A
50. 9P REMOTE	VEP80551A	VEP80551A	VEP80551A	VEP80551B	VEP80551A	VEP80551A	VEP80551A
51. 50P REMOTE	----------	----------	----------	VEP80558A	----------	----------	----------

OVERALL BLOCK DIAGRAM [FOR AU-665 NTSC]

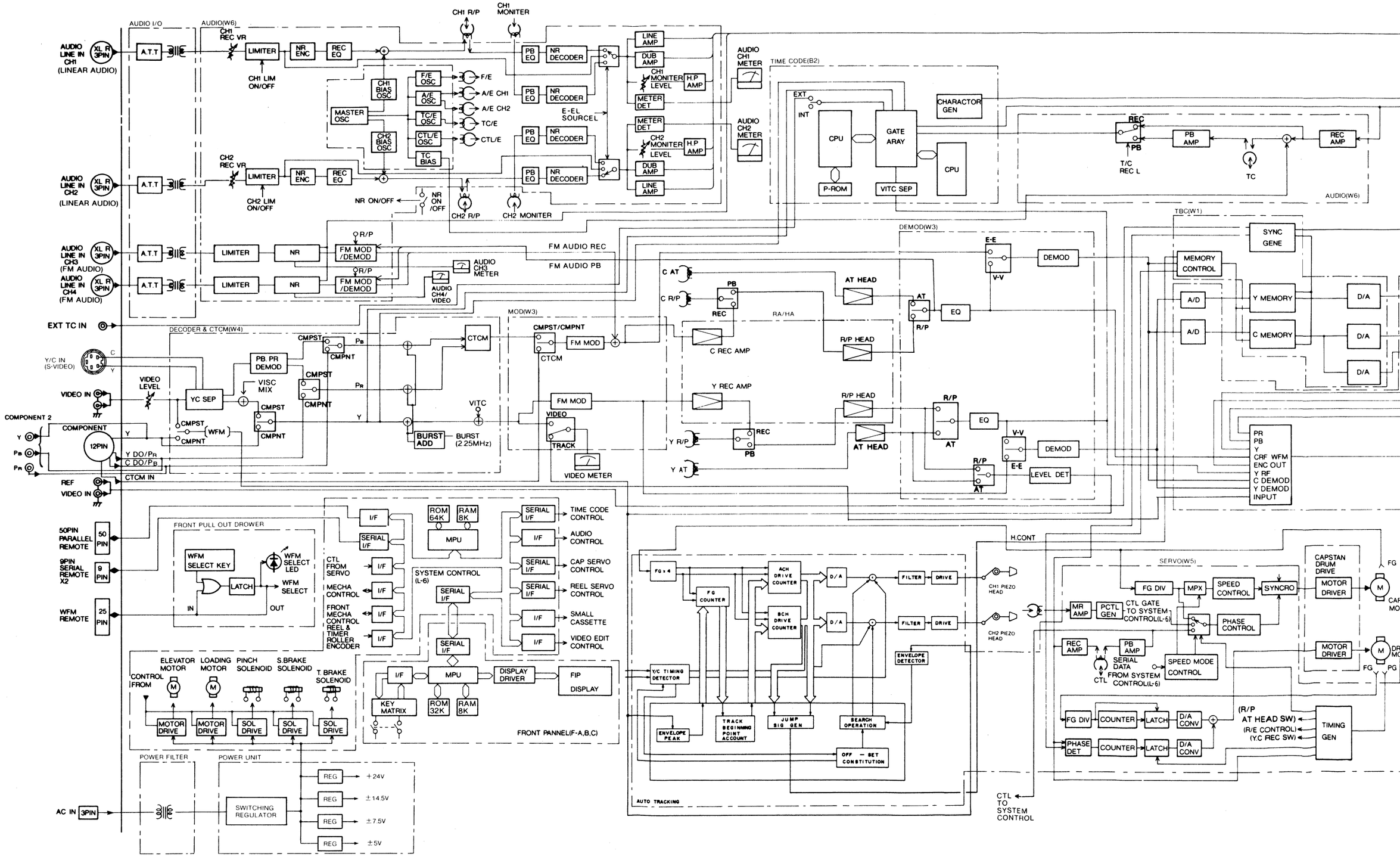

TSC]

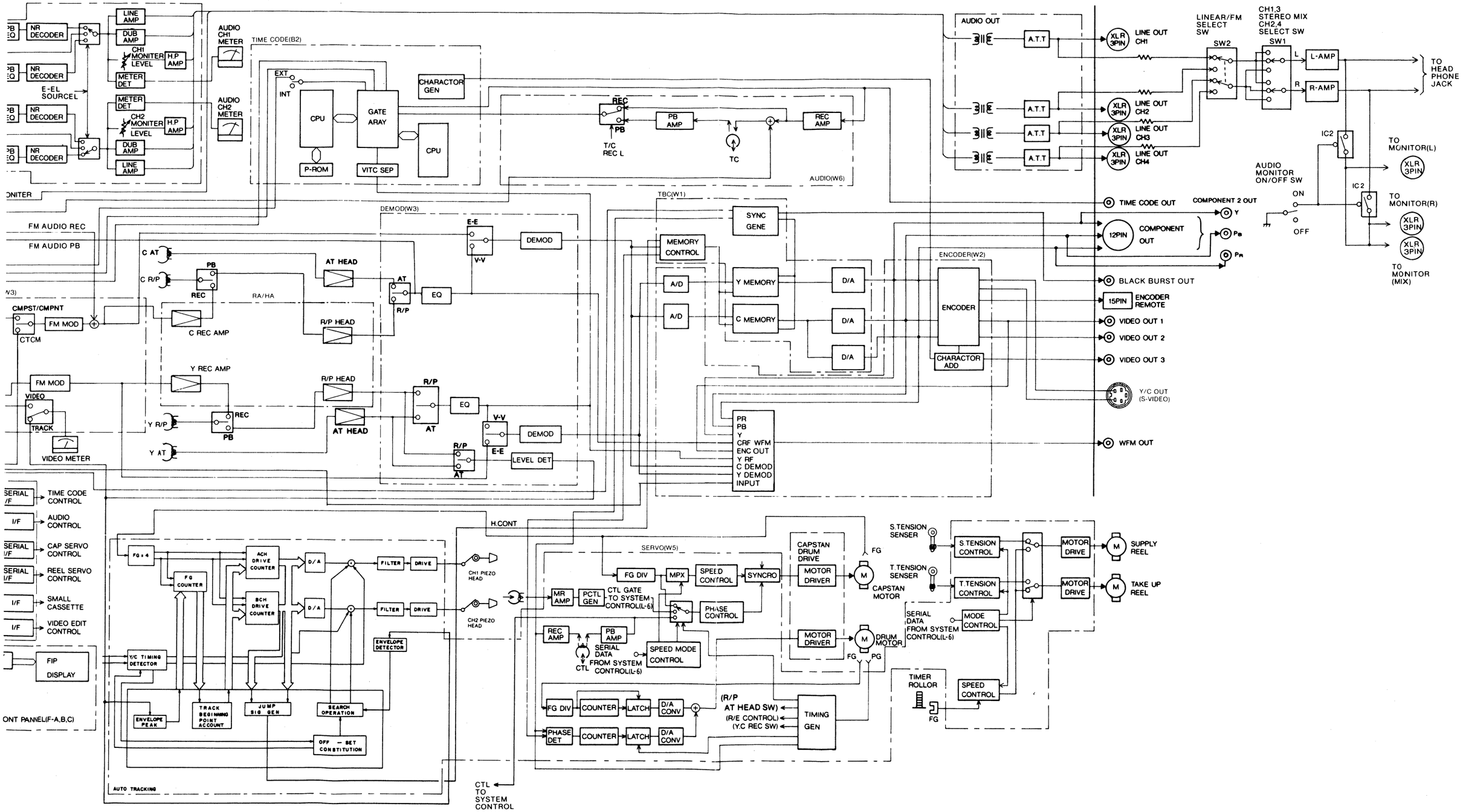

REVERSE SIDE OVER ALL BLOCK DIAGRAM

OVER ALL BLOCK DIAGRAM[FOR AU-65]

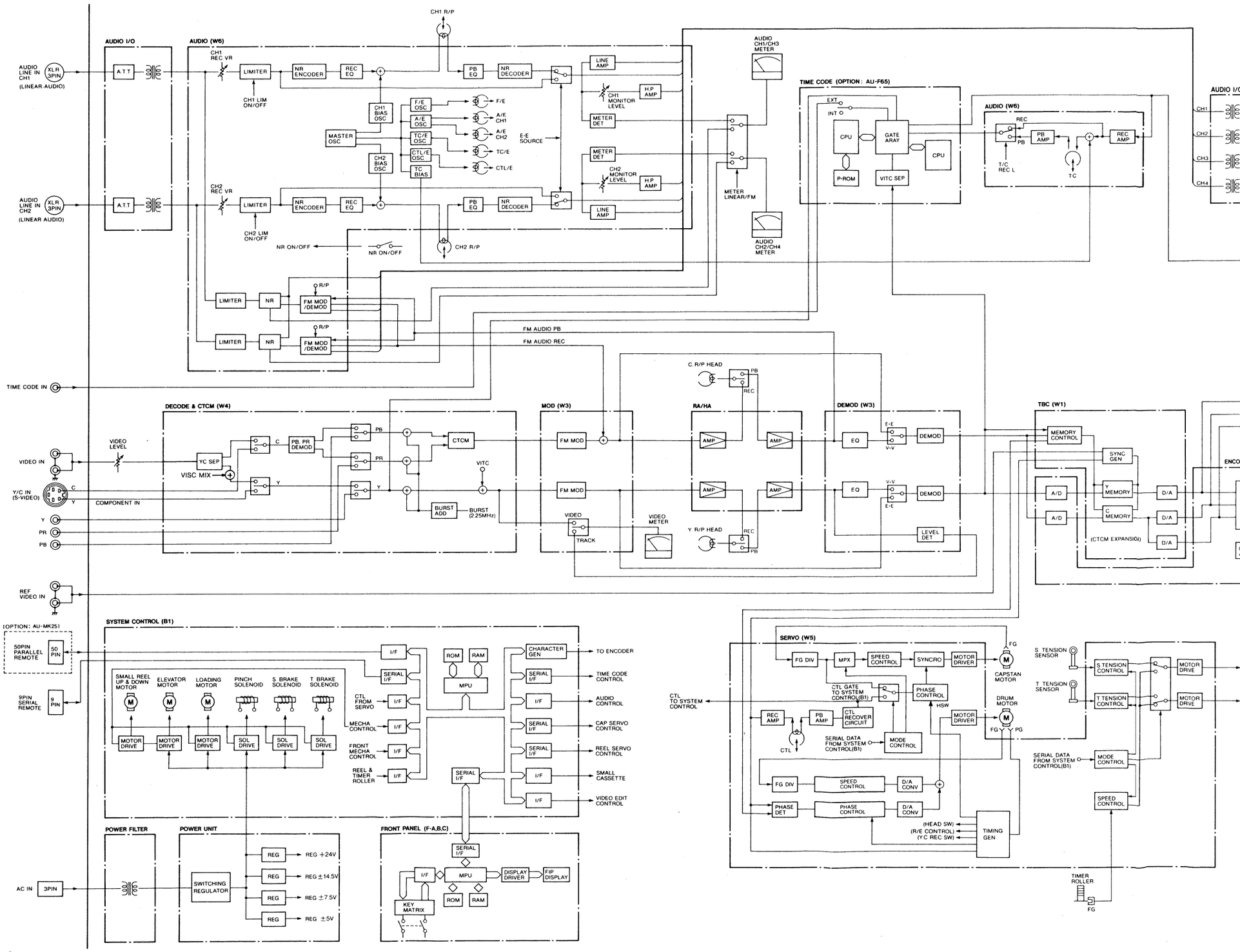

AGRAM [FOR AU-65]

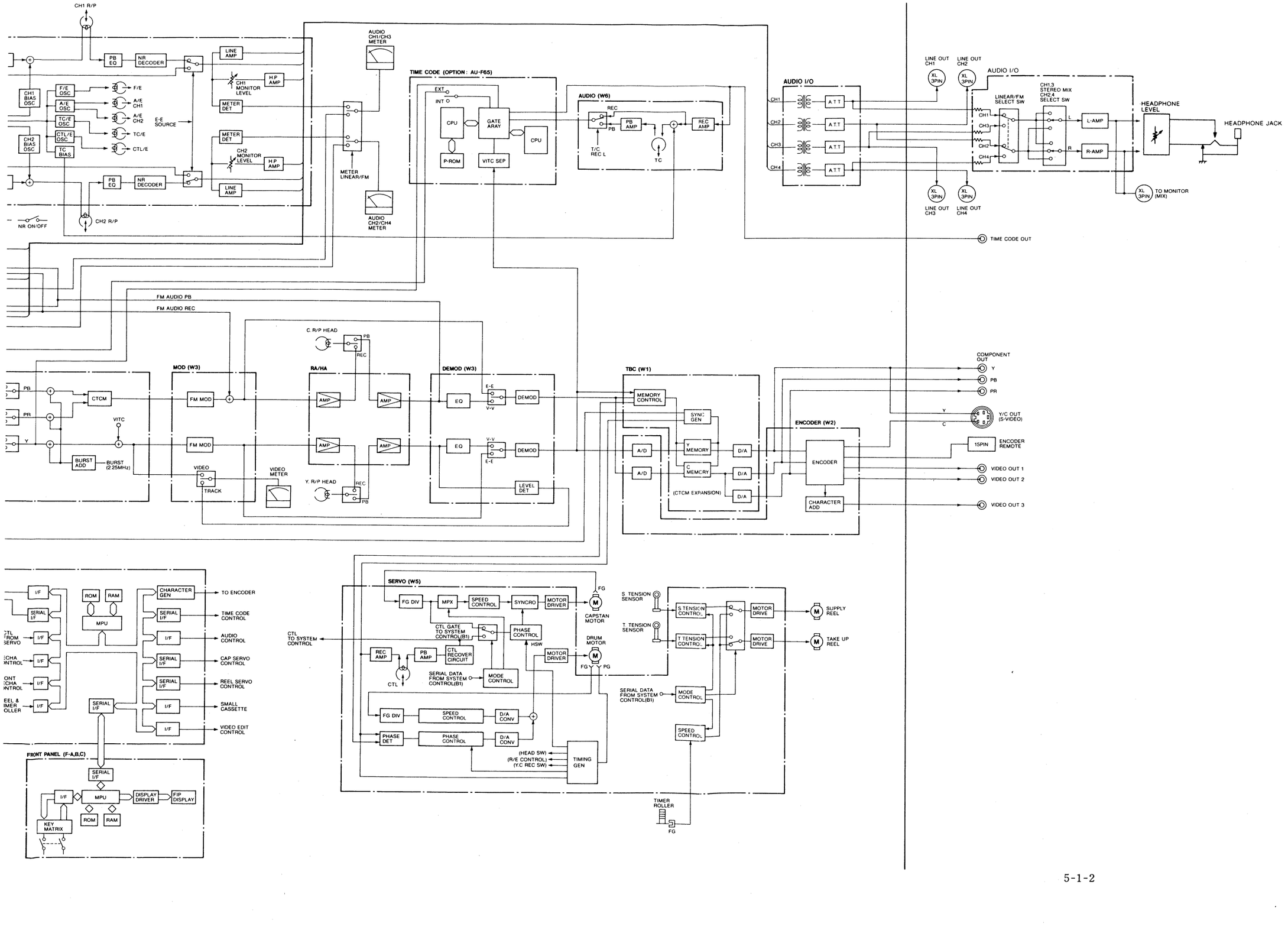

OVER ALL BLOCK DIAGRAM[FOR AU-63]

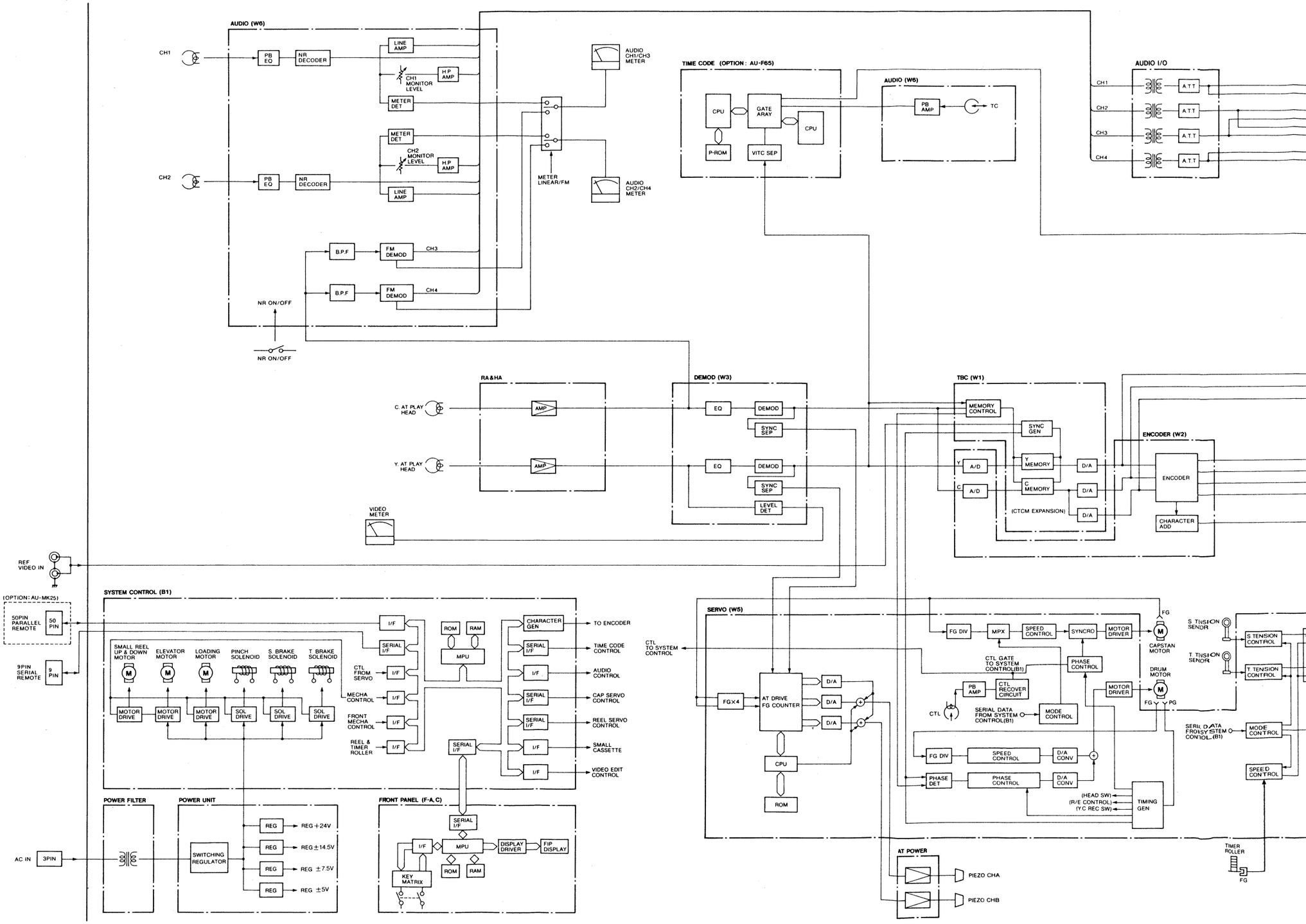

OVER ALL BLOCK DIAGRAM[FOR AU-63]

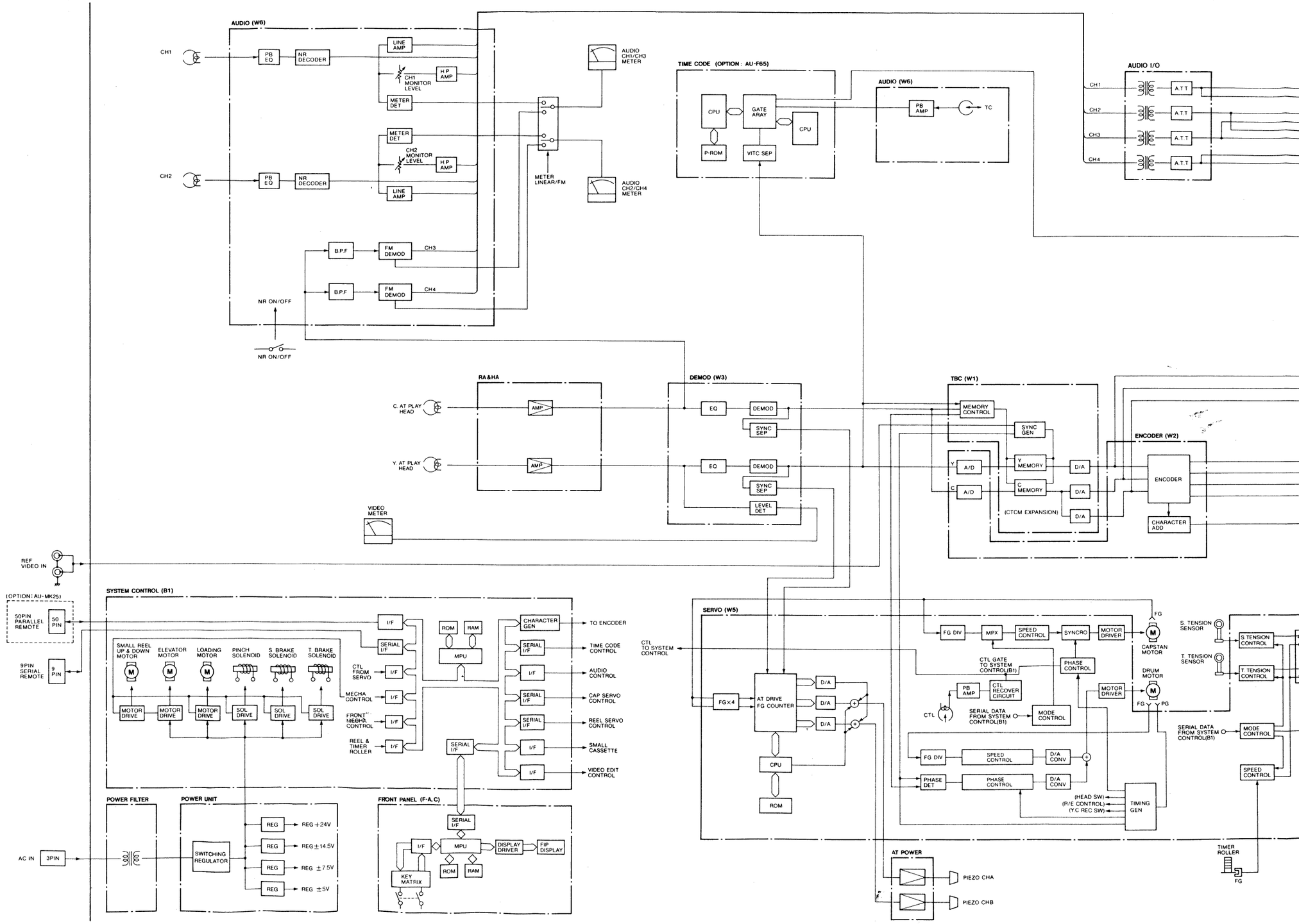

OVER ALL BLOCK DIAGRAM[FOR AU-62]

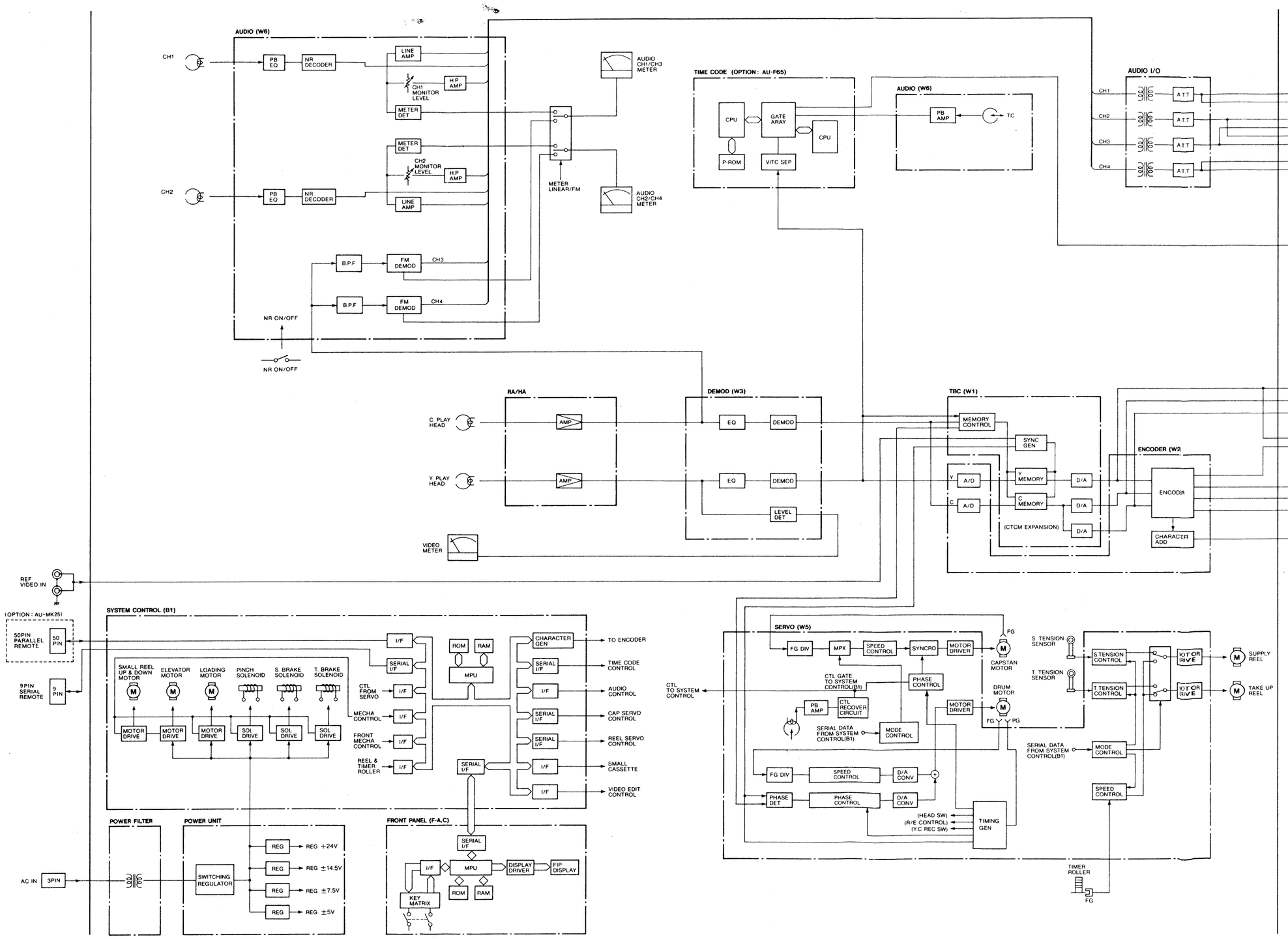

GRAM[FOR AU-62]

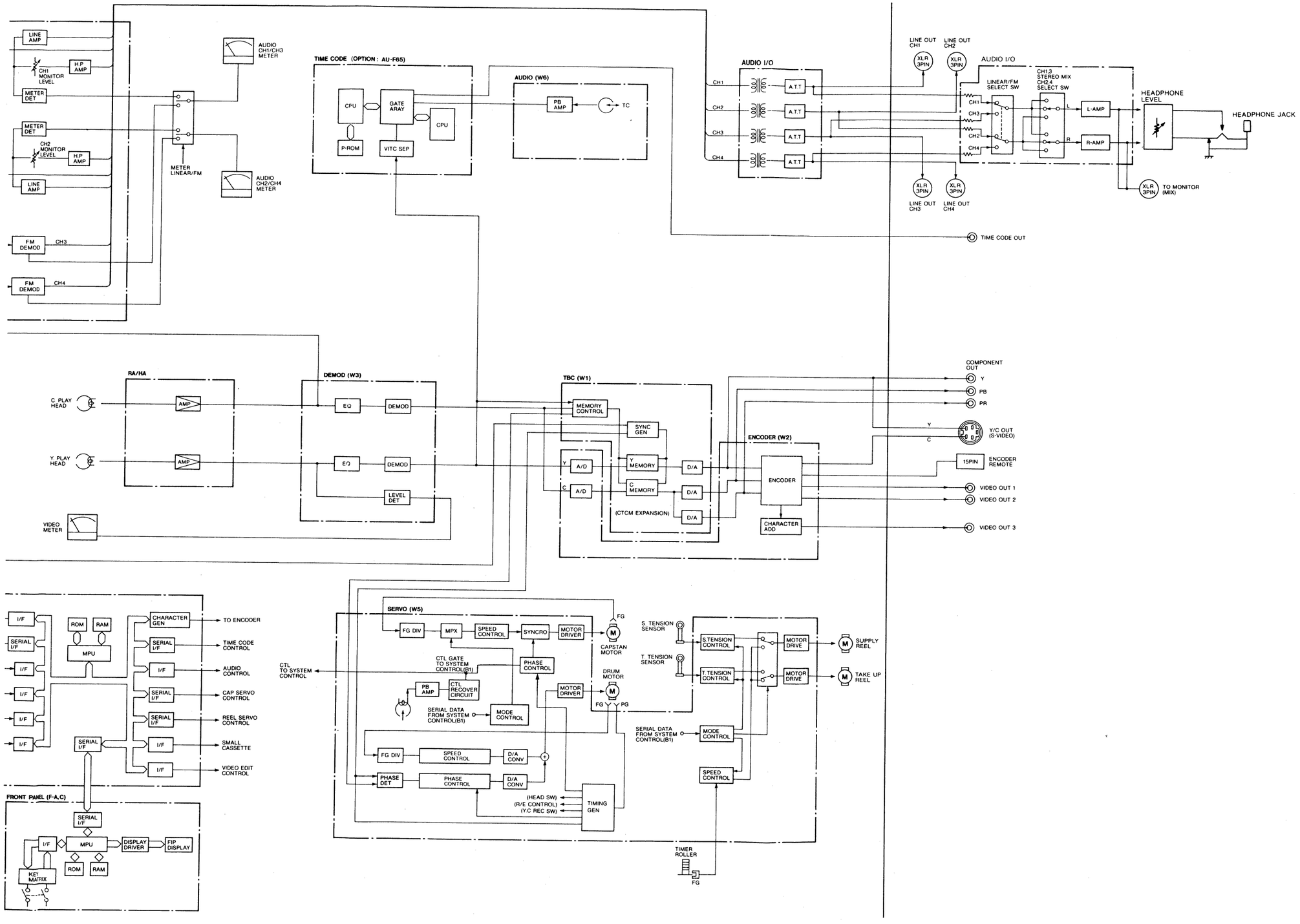

W1 (TBC & SYNC GEN) BLOCK DIAGRAM 1/3 (TBC SECTION)[FOR AU-65,AU-63,AU-62]

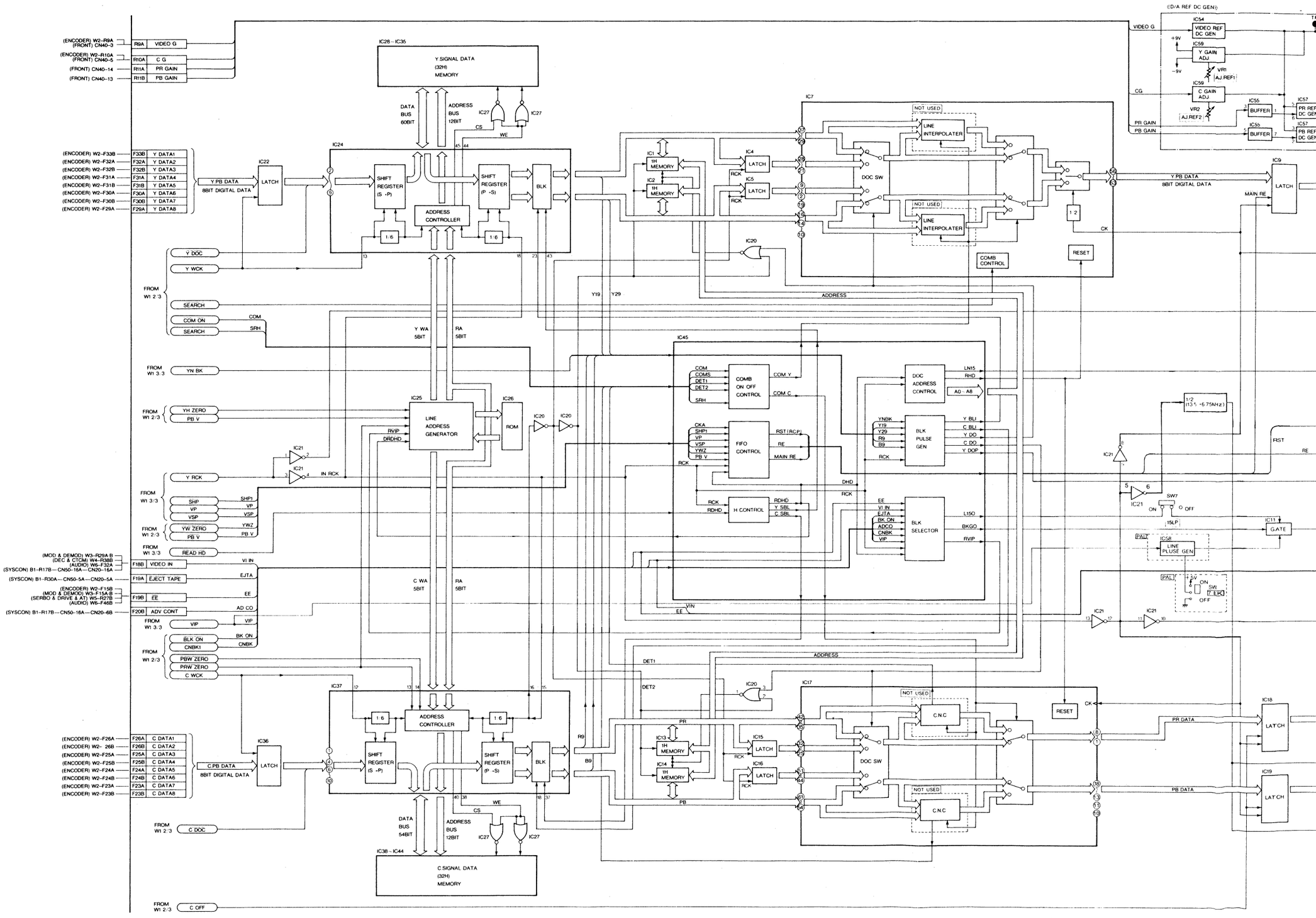

.OCK DIAGRAM 1/3 (TBC SECTION)[FOR AU-65,AU-63,AU-62]

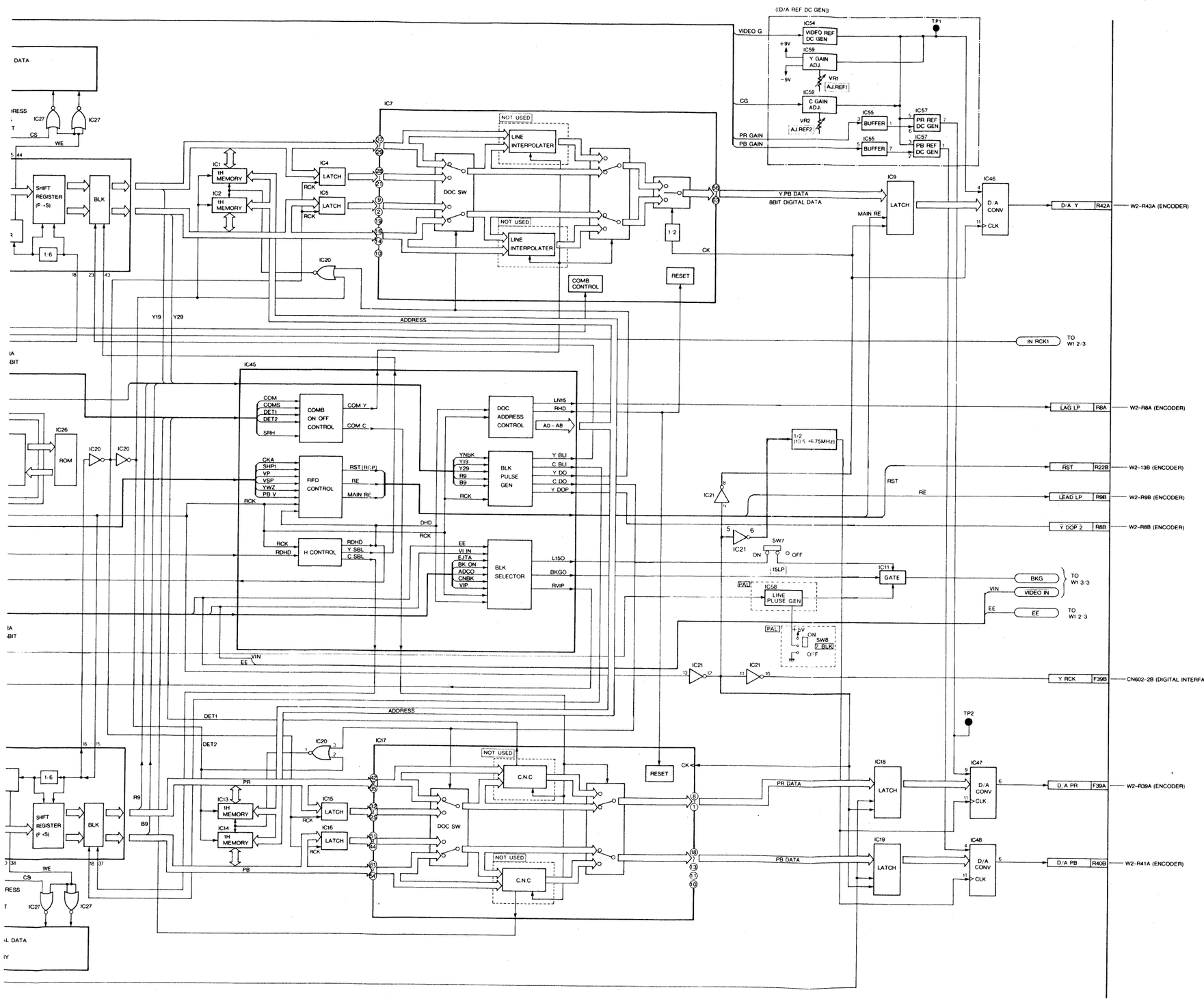

IC45 (μPD65013FA44)

PIN NO.	PIN NAME	IN/OUT	DESCRIPTION	PIN NO.	PIN NAME	IN/OUT	DESCRIPTION
1	COM	IN		47	A8	OUT	ADDRESS FOR 1H MEMO
2	COMS	IN		48	EE	IN	E-E MODE Ⓛ
3	DET1	IN		49	VIIN	IN	VIDEO SIGNAL IN Ⓛ
4	DET2	IN		50	EJTA	IN	TAPE MODE AND EJECT
5	CNC	IN		51	BKON	IN	R/P HEAD SEARCH Ⓛ
6	SRH	IN		52	ADCO	IN	E-E MODE V=REF Ⓗ, V=INCOM Ⓛ
7	PAL	IN	PAL Ⓛ				
8	COMY	OUT	Y COM "ON" Ⓛ	53	CNBK	IN	C NARRON DIGITAL BLAN PULSE
9	COMC	OUT	C COM "ON" Ⓛ	54	VIP	IN	READ ADDRESS TIMING
11	CKA	IN	CLOK A (=CK1 13.5MHz)	55	MMY	IN/OUT	Y MONOSCALE MULTIVIBF CONTROL
12	SHP1	IN	SAMPLE HOLD PULSE FOR CK1				
13	VP	IN	VERTICAL PULSE OF VIDEO OUT	72	RVIP	OUT	READ ADDRESS TIMING
14	VSP	IN	2 FH PULSE OF VIDEO OUT	73	BKGO	OUT	V BLANKING DATA OUTP
16	YWZ	IN	Y WRITE ZERO (START PULSE)	74	BKGI	IN	V BLANKING PULSE BY B
17	PBV	IN	TIMING PULE FOR WRITING MEMORY	75	MDB1	IN	MODE SW FOR YNBK DE TIME
19	RCP	OUT	READED SIGNAL CLAMP PULSE (FOR ENCODER)	76	MDB2	IN	MODE SW FOR YNBK DE TIME
20	RST	OUT	RE SE T PULSE READING FIFO	77	MDA1	IN	MODE SW FOR BKGI DEL TIME
21	RE	OUT	READ ENABLE PULSE FOR READING FIFO	78	MDA2	IN	MODE SW FOR BKGI DEL TIME
22	WE	OUT	WRITE ENABLE PULSE FOR WRITING FIFO	79	MDB3	IN	MODE SW FOR YNBK DE TIME
23	MRE	OUT	VIDEO DATA TO D/A Ⓛ	80	YDOP	OUT	Y DROP OUT PULSE (FO ENCODER)
24	RCK	IN	READ CLOCK				
25	RDHD	IN	HD PULSE FOR READ ADDRESS	81	Y19	IN	Y PARALLEL DATA OF DF OUT PULSE
26	MDC1	IN	MODE SW FOR RDHD DELAY TIME	82	Y29	IN	Y PARALLEL DATA OF DF OUT PULSE
27	MDC2	IN	MODE SW FOR RDHD DELAY TIME	83	R9	IN	C PARALLEL DATA OF DF OUT PULSE
28	YSBL	OUT	Y SERIAL BLANKING DATA	84	B9	IN	C PARALLEL DATA OF DF OUT PULSE
29	CSBL	OUT	C SERIAL BLANKING DATA				
30	EHDO	OUT	DELAYED RDHD	85	YMMO	OUT	WIDEND YDO OUTPUT
31	EHDI	IN	EHDO INPUT	86	YMMI	IN	WIDEND YDO INPUT
32	DHDO	OUT	DELAYED EHDO (MEMORY REFERENCE HD)	87	CMMO	OUT	WIDEND CDO OUTPUT
33	DHDI	IN	DHDO INPUT	88	CMMI	IN	WIDEND CDO INPUT
34	CKO	IN	6.75 MHz	89	YBLI	OUT	Y BLANKING PULSE
35	LN15	OUT	NTSC15 LINE, PAL 12 LINE	92	CBLI	OUT	C BLANKING PULSE
36	RHD	OUT	RESET SIGNAL	93	YDO	OUT	Y DROP OUT SIGNAL
37	A0	OUT	ADDRESS FOR 1H MEMORY	94	CDO	OUT	C DROP OUT SIGNAL
38	A1	OUT	ADDRESS FOR 1H MEMORY	95	L15O	OUT	NISC 15 LINE PAL 12 LINE OUTPUT
39	A2	OUT	ADDRESS FOR 1H MEMORY				
42	A3	OUT	ADDRESS FOR 1H MEMORY	96	L15I	IN	NISC 15 LINE PAL 12 LINE OUTPUT
43	A4	OUT	ADDRESS FOR 1H MEMORY				
44	A5	OUT	ADDRESS FOR 1H MEMORY	97	YNBK	IN	Y NARROW DIGITAL BLAN PULSE
45	A6	OUT	ADDRESS FOR 1H MEMORY				
46	A7	OUT	ADDRESS FOR 1H MEMORY	99	MMC	IN/OUT	C MONOSTABLE MULTIVIB CONTROL

REVERSE SIDE TBC &
BLOC

W1 (TBC & SYNC GEN) BLOCK DIAGRAM 2/3 (WRITE CLOCK GEN SECTION)

IC479 《APC》

PIN NO.	PIN NAME	IN/ OUT	DESCRIPTION
1	CMST	IN	C MONOMULTI START
2	CWST	IN	C WRIGHT START
3	YWST	IN	Y WRIGHT START
4	YMST	IN	Y MONOMULTI START
5	———	—	
6	GND	—	
7	CK54	IN	CLOCK 54MHz
10	YTP	OUT	Y TEST POINT
11	CTP	OUT	C TEST POINT
12	YWCK	OUT	Y WRIGHT CLOCK
17	GND	—	
18	NTCL	IN	NTSC LOW (PAL HIGH)
22	CWCK	OUT	C WRIGHT CLOCK
23	CAPS	OUT	C APC START
24	YAPS	OUT	Y APC START
25	VPH1	IN	VIDEO PHASE 1
26	VPH2	IN	VIDEO PHASE 2

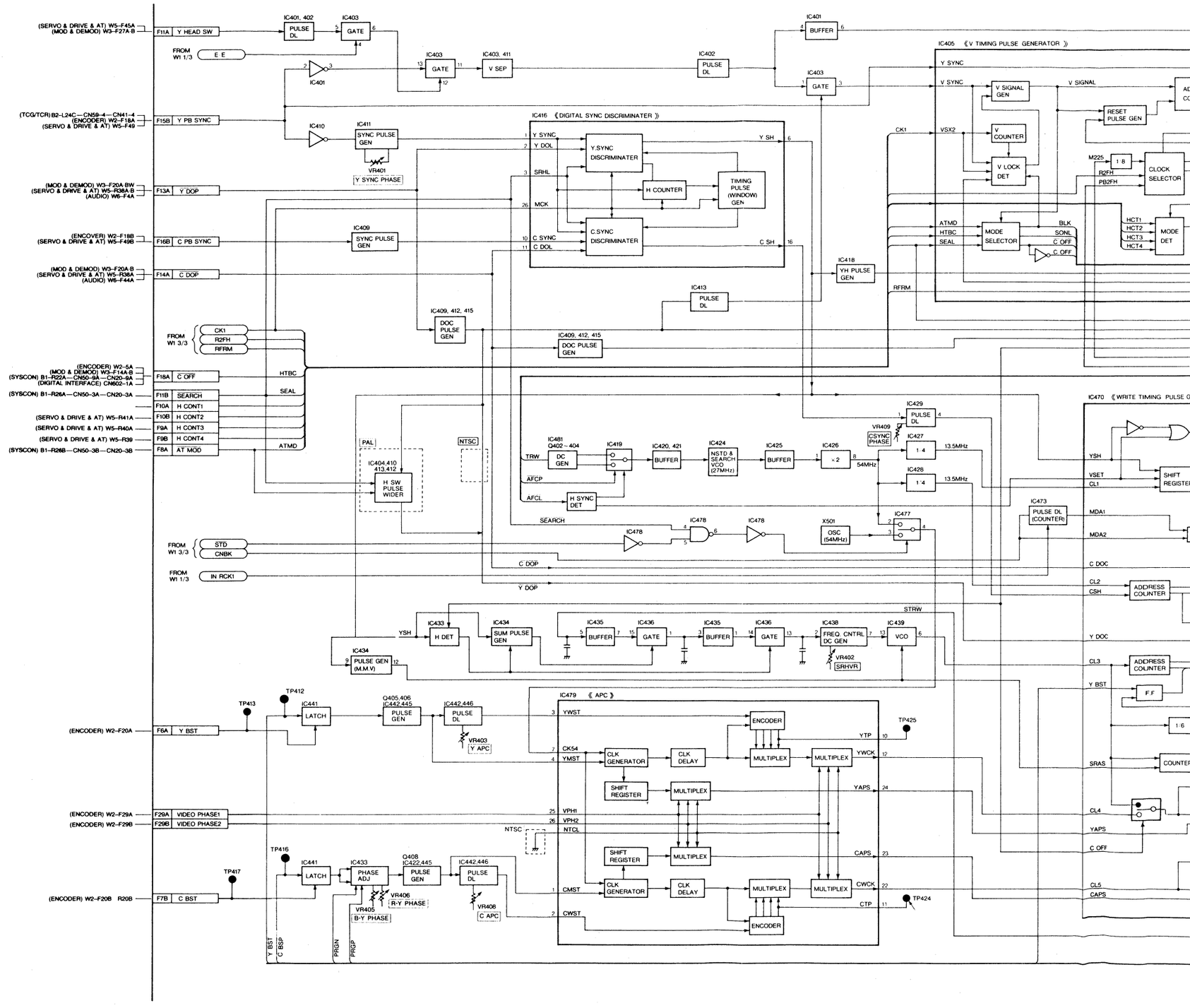

(TBC & SYNC GEN) BLOCK DIAGRAM 2/3 (WRITE CLOCK GEN SECTION)[FOR AU-65,AU-63,AU-62]

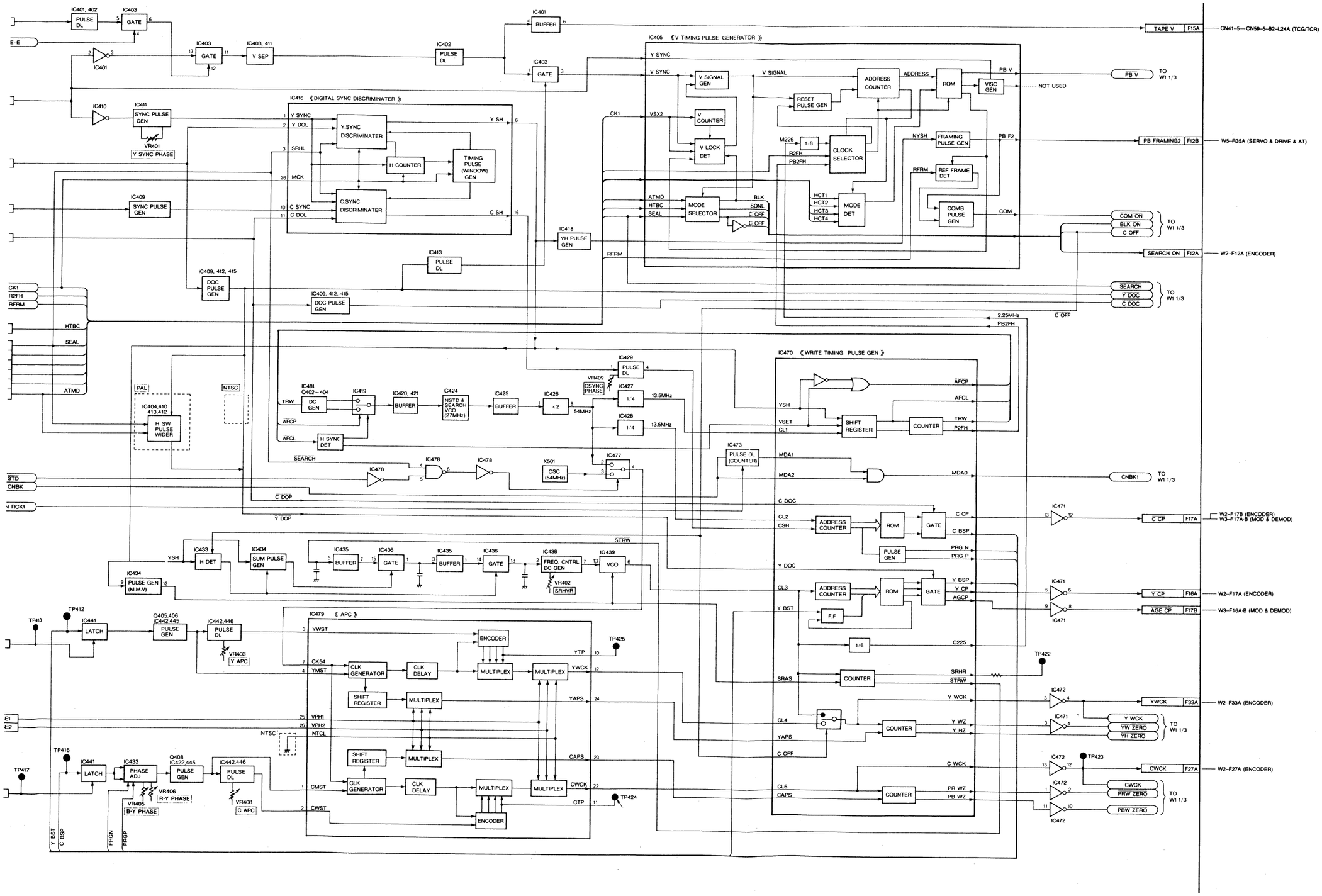

W1 (TBC & SYNC GEN) BLOCK DIAGRAM 3/3 (SYNC GEN SECTION)[FOR AU-65,AU-63,AU-62]

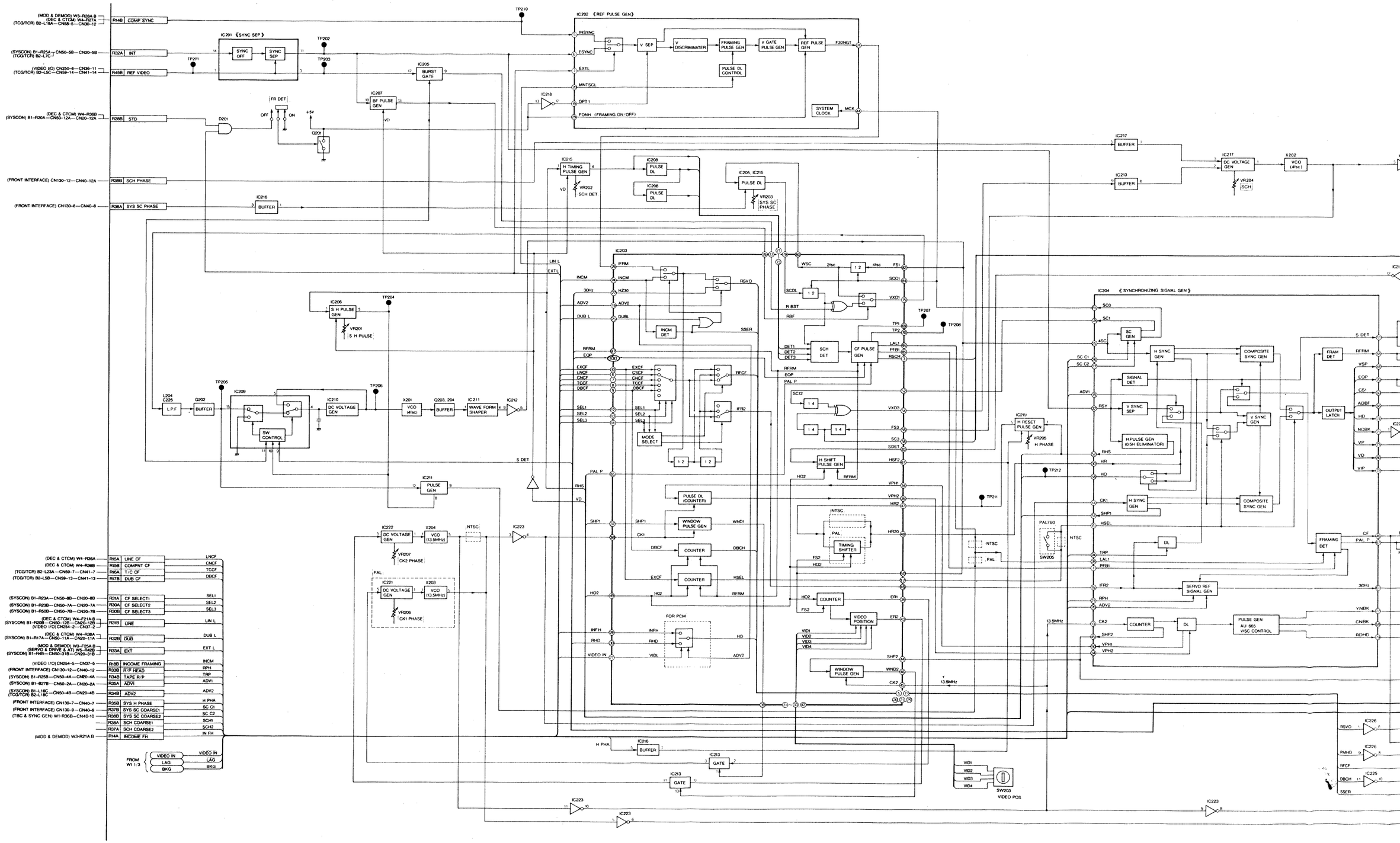

iRAM 3/3 (SYNC GEN SECTION)[FOR AU-65,AU-63,AU-62]

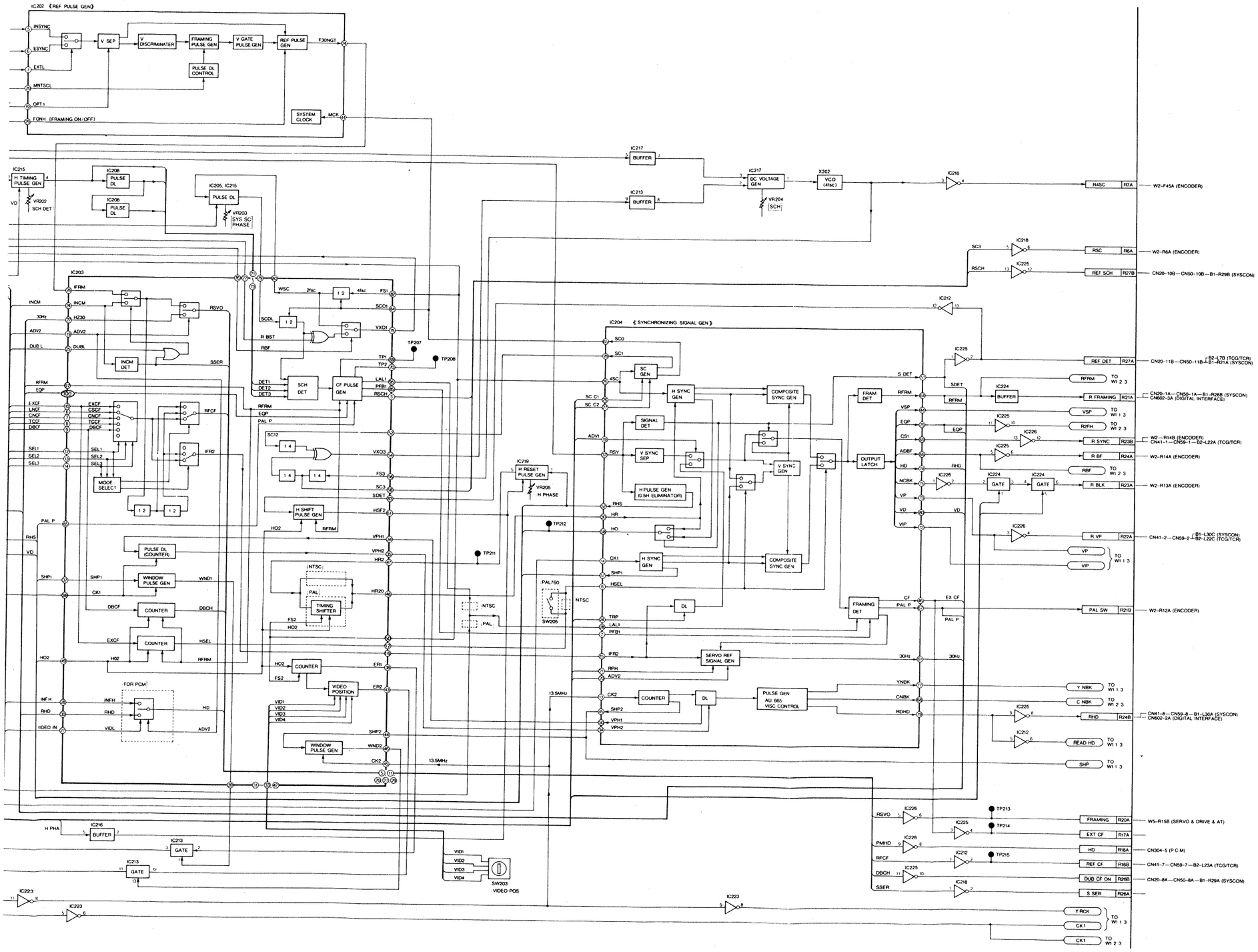

IC203 (μPD65024GF152)

PIN NO.	PIN NAME	IN/ OUT	DESCRIPTION	PIN NO.	PIN NAME	IN/ OUT	DESCRIPTI
3	RSCH	OUT	REFERENCE SCH	45	CK2	IN	CLOCK 2
5	DBCH	OUT	DUB COLOR FRAMING IN HIGH	46	WND2	OUT	WINDOW 2
6	OSCF	IN	COMPO SITE COLOR FRAMING	47	HR2	IN	H RESET 2
7	CNCF	IN	COMPONENT COLOR FRAMING (ID PULSE)	48	HR20	OUT	H RESET 2 OUTPUT
8	TCCF	IN	TIME CODE COLOR FRAMING	49	HO2	IN	HO SIGNAL (IC204 5 NO. 2
9	DBCF	IN	DUB COLOR FRAMING	50	FS2	IN	FOUR SUB CARRIER (4 FSC)
10	EXCF	IN	EXTERNAL COLOR FRAMING	52	SCI2	IN	SC1 (IC204 78P) INP
11	RFCF	OUT	REFERENCE COLOR FRAMING FOR SERVO	53	SCH1	IN	SCH COARSE CONT
12	SEL1	IN	COLOR FRAMING SELECTOR SIGNAL	54	VXO3	OUT	CONTROL SIGNAL 3
13	SEL2	IN	COLOR FRAMING SELECTOR SIGNAL	55	SCH2	IN	SCH COARSE CONT
14	SEL3	IN	COLOR FRAMING SELECTOR SIGNAL	56	FS3	IN	FOUR SC NO. 3 (4 F
16	IFR2	OUT	COLOR FRAMING SIGNAL FOR E-E	58	SC3	OUT	SUB CARRIER 3
19	ADV2	IN	ADVANCE 2	60	SCO2	IN	SUB CARRIER O (IC2 INPUT NO. 2
20	RSVO	OUT	REFERENCE FOR SERVO VO (30Hz)	61	HSF2	OUT	H SHIFT PROTECTIO
21	SSER	OUT	IMCM SIGNAL (24P) IN (H)	69	TP1	OUT	TEST POINT 1 (FOR
22	HZ30	IN	30Hz	70	TP2	OUT	TEST POINT 2 (FOR
24	INCM	IN	INCOME 30Hz	71	DET1	IN	DETECTION FOR SU POLARITY (H TIMING
25	DUBL	IN	DUB LOW	72	DET2	IN	DETECTION FOR SU POLARITY (H TIMING
26	IFRM	IN	INCOME FRAME (REF 30Hz)	73	DET3	IN	DETECTION FOR SU POLARITY (H TIMING
27	VIDL	IN	DELAYED VERTICAL INTERVAL	74	PALP	IN	PAL PULSE
28	INFH	IN	INCOME FRAMING	75	VXO1	OUT	CONTROL SIGNAL 1
29	HD	OUT	HORIZONTAL DRIVE PULSE	76	RBF	IN	REFERENCE VIDEO
30	RHD	IN	HORIZONTAL DRIVE PULSE (=TBC READ TIMING)	77	RBST	IN	REFERENCE VIDEO
31	VID1	IN	VIDEO ϕ1	79	SCDL	IN	DELAYED 2FSC
32	VID2	IN	VIDEO ϕ2	80	WSC	OUT	DOUBLE SUB CARRI
33	VID3	IN	VIDEO ϕ3	81	SELM	IN	SELECT MODE (NTS
34	VPH1	IN	VIDEO PHASE 1	82	FS1	IN	FOUR SUB CARRIER
35	VPH2	OUT	VIDEO PHASE 2	83	SDET	IN	SYNC DETECTION
36	CK1	IN	CLOCK 1	84	SCO1	IN	SUB CARRIER O (IC2 INPUT NO. 1
37	SHP1	IN	SAMPLE HOLD PULSE 1	85	PFB1	OUT	COLOR FRAMING RE (PAL)
38	ER1	OUT	ERROR 1	95	LILI	OUT	COLOR FRAMING RE (NTSC)
39	WND1	OUT	WINDOW 1	96	CF1	IN	COLOR FRAMING 1
42	VID4	IN	VIDEO ϕ4	97	RFRM	IN	REFERENCE FRAME
43	ER2	OUT	ERROR 2	100	EQP	IN	EQUALIZING PULSE
44	SHP	IN	SAMPLE HOLD PULSE 2				

IC204 SYNC GEN GATE ARRAY PIN FUNCTION (μPD65040GF144)

PIN NO.	PIN NAME	IN OUT	FUNCTION	PIN NO.	PIN NAME	IN OUT	FUNCTION
1	RST	IN	TEST RESET	41	RHS	OUT	REFERENCE H SYNC
2	VDD	IN	+5V	42	VD1	IN	+5V
3	GND			43	GND		
4	MOD1	IN	[0] NTSC [1] PAL	44	VSP	OUT	V SEPARATION PULSE
5	MOD2	IN	[0] NTSC [1] PAL	45	SHP2	OUT	CK2 SAMPLE & HOLD
6	HSEL	IN	H SYNC SELECT	46	CF	OUT	COLOR FRAMING SIG
7	PFBW	IN	V-BLK SET (NTSC) COLOR FRANING CONT. (PAL)	47	SSEL	IN	HR ADJUST RANGE
				48	CSI	OUT	COMPOSITE SYNC
8	LSEL	IN	V-SYNC SELECT	49	LPF1	IN	LPF FOR FRAMING
9	CKSW	IN	VIDEO PHASE CLOCK SELECT	50	VPH1	IN	VIDEO PHASE MMV
10	TST1	IN	TEST CONTROL	51	SDET	OUT	REF SYNC DETECT
11	TST2	IN	TEST CONTROL	52	RHS	OUT	REF H SYNC W/O EQ P
12	BDET	IN	BURST DETECT	53	CBI	OUT	1 125MHz
13	CK2	IN	13.5MHz CLOCK	54	YBI	OUT	2 25MHz
14	CK1	IN	13.5MHz CLOCK	55	CBF	OUT	C BURST FLAG
15	IFR2	IN	INCOME VIDEO FRAMING	56	YBF	OUT	Y BURST FLAG
16	LPF2	IN	LPF FOR FRAMING	57	SHP1	OUT	CK1 SAMPLE & HOLD
17	SSER	IN	SOURCE SEARCH 30Hz SELECT	58	HO	OUT	TRAPEZOIDE H PULSE
18	PINH	IN	VISC CONTROL ON/OFF	59	IFR	OUT	IN VIDEO FRAMING
19	ADV1	IN	ADVANCE 1 FOR V_s SELECT	60	RYI	OUT	R-Y (P_R) SYNC
20	ADV2	IN	ADVANCE 2 FOR 30Hz SELECT	61	30Hz	OUT	SERVO CONTROL 30Hz
21	RPH	IN	R/P HEAD SELECT	62	GND		
22	GND			63	VDI	IN	+5V
23	VDD	IN	+5V	64	RFRM	OUT	REF FRAMING
24	TRP	IN	TRAPEZOIDE FOR PLL	65	SCI	OUT	SUB CARRIER
26	SCC1	IN	SC PHASE CONTROL	66	ADIF	OUT	ADVANCE BURST FLAG
27	SCC2	IN	SC PHASE CONTROL	67	PALP	OUT	PAL PULSE (0 5fH)
28	LAL1	IN	COLOR FRAMING RESET	68	CNBK	OUT	CHROMA DIGITAL BLA
29	IVS	IN	INCOME VIDEO V SYNC	69	CSI	OUT	COMP SYNC
30	HR	IN	H.SYNC RESET	70	EQI	OUT	EQUALIZER PULSE
31	ISY	IN	IN VIDEO COMP SYNC	71	BF	OUT	BURST FLAG
32	RSY	IN	REF VIDEO COMP SYNC	72	VIP	OUT	10 LINE PULSE
33	GND			73	VP	OUT	V PULSE
34	VPH2	IN	VIDEO PHASE MMV	74	HD	OUT	HORIZONTAL DRIVE
35	PST1	IN	VISC CONTROL 90° STEP	75	NCBK	OUT	COMP BLANKING SIGN
36	PST2	IN	VISC CONTROL 90° STEP	76	CBI	OUT	COMP BLANKING SIGN
37	ADS1	IN	ADVANCE SET	77	YNBK	OUT	Y DIGITAL BLANKING
38	ADS2	IN	ADVANCE SET	78	SCI	OUT	SUB CARRIER
39	ADS3	IN	ADVANCE SET	79	RDHD	OUT	TBC READ START
40	ADS4	IN	ADVANCE SET	80	VD	OUT	VERTICAL DRIVE

REVERSE SIDE TBC & BLOCK

W1(TBC & SYNC GEN) BLOCK DIAGRAM 1/3 (WRITE CLOCK GEN SECTION) [FOR AU-665 NTSC]

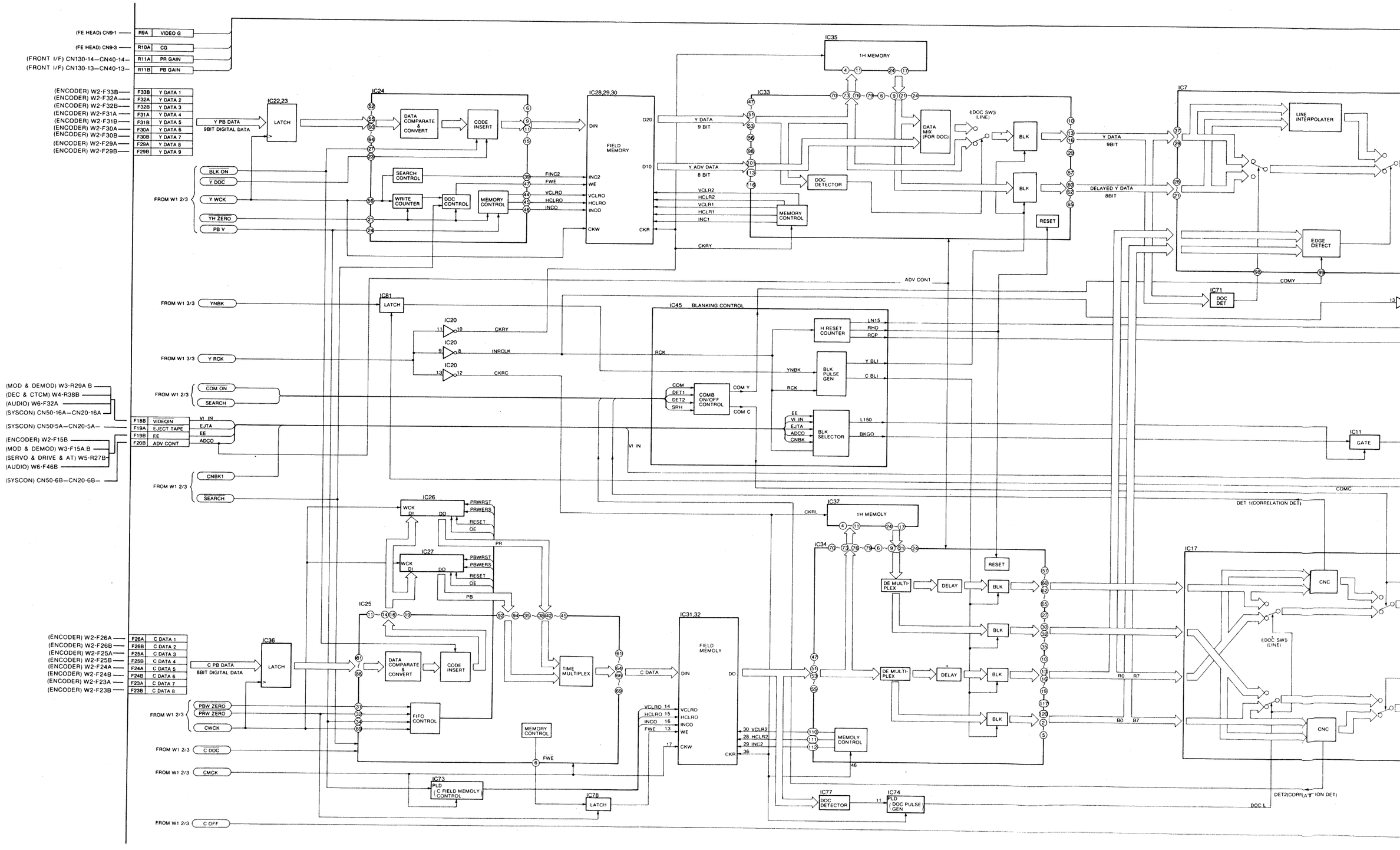

1/3 (WRITE CLOCK GEN SECTION) [FOR AU-665 NTSC]

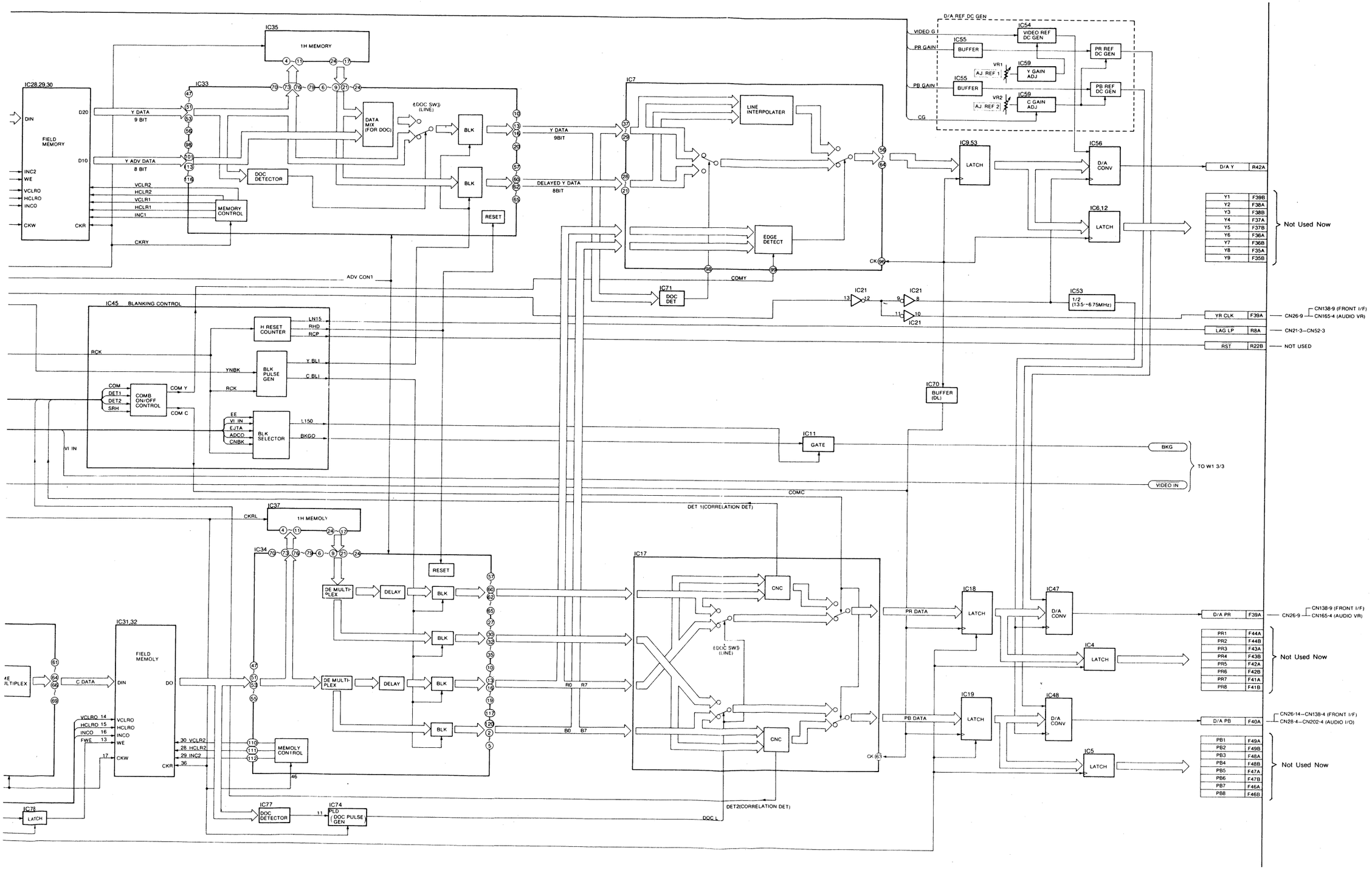

W1(TBC & SYNC GEN) BLOCK DIAGRAM 2/3 (FIELD TBC SECTION) [FOR AU-665 NTSC]

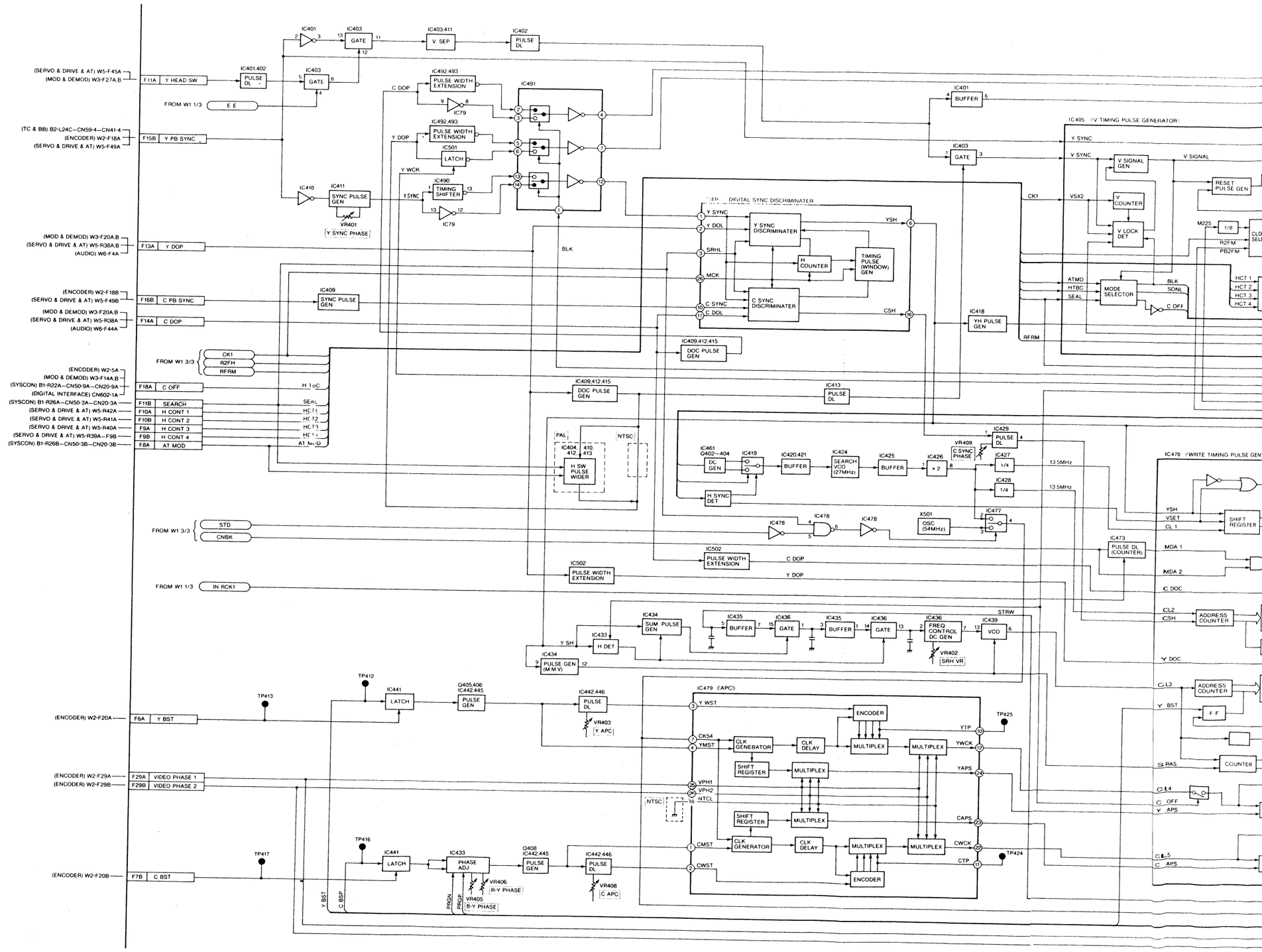

GEN) BLOCK DIAGRAM 2/3 (FIELD TBC SECTION) [FOR AU-665 NTSC]

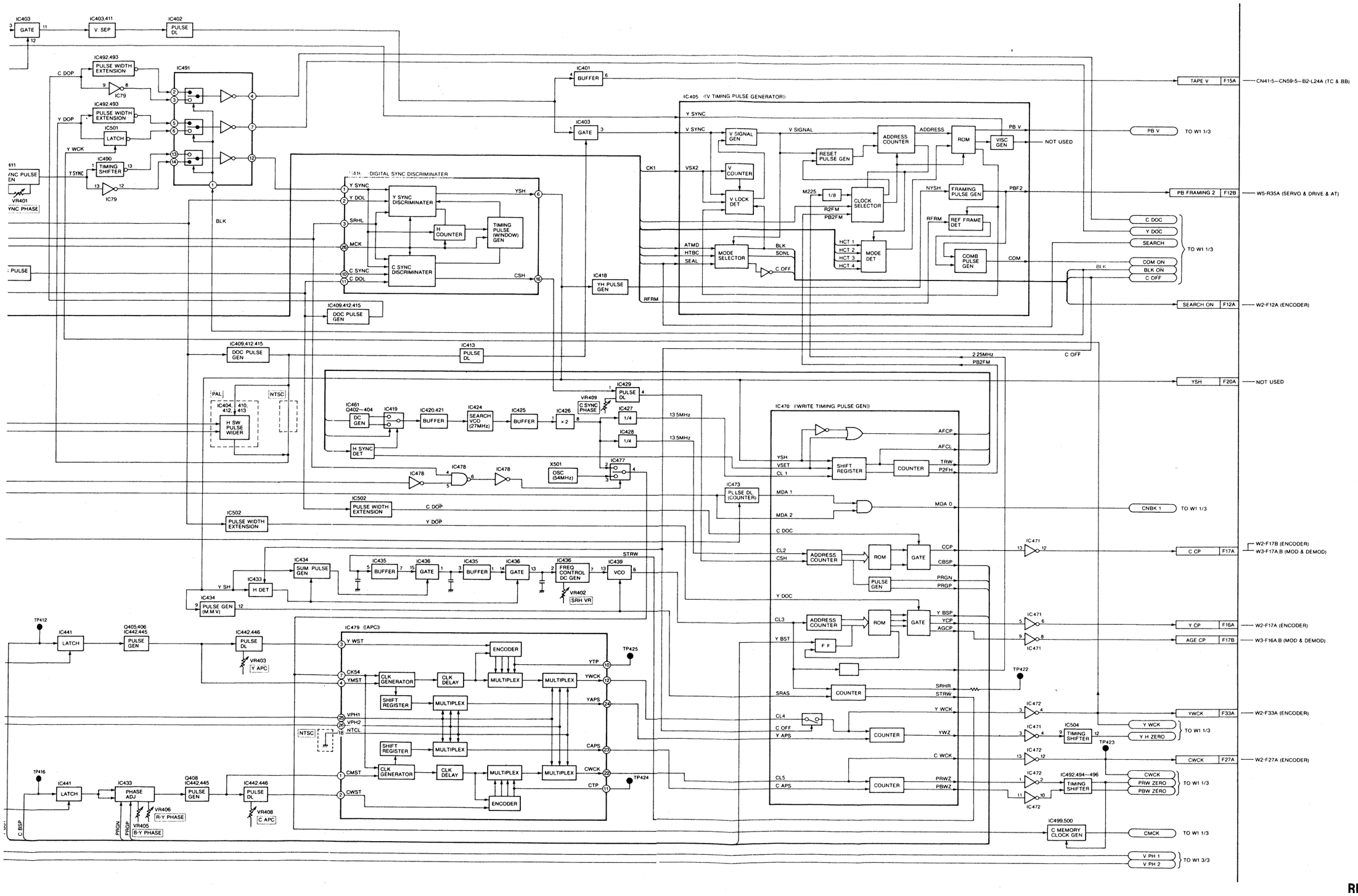

REVERSE SIDE TBC & S BLOCK

W1(TBC & SYNC GEN) BLOCK DIAGRAM 3/3 (SYNC GEN SECTION) [FOR AU-665 NTSC]

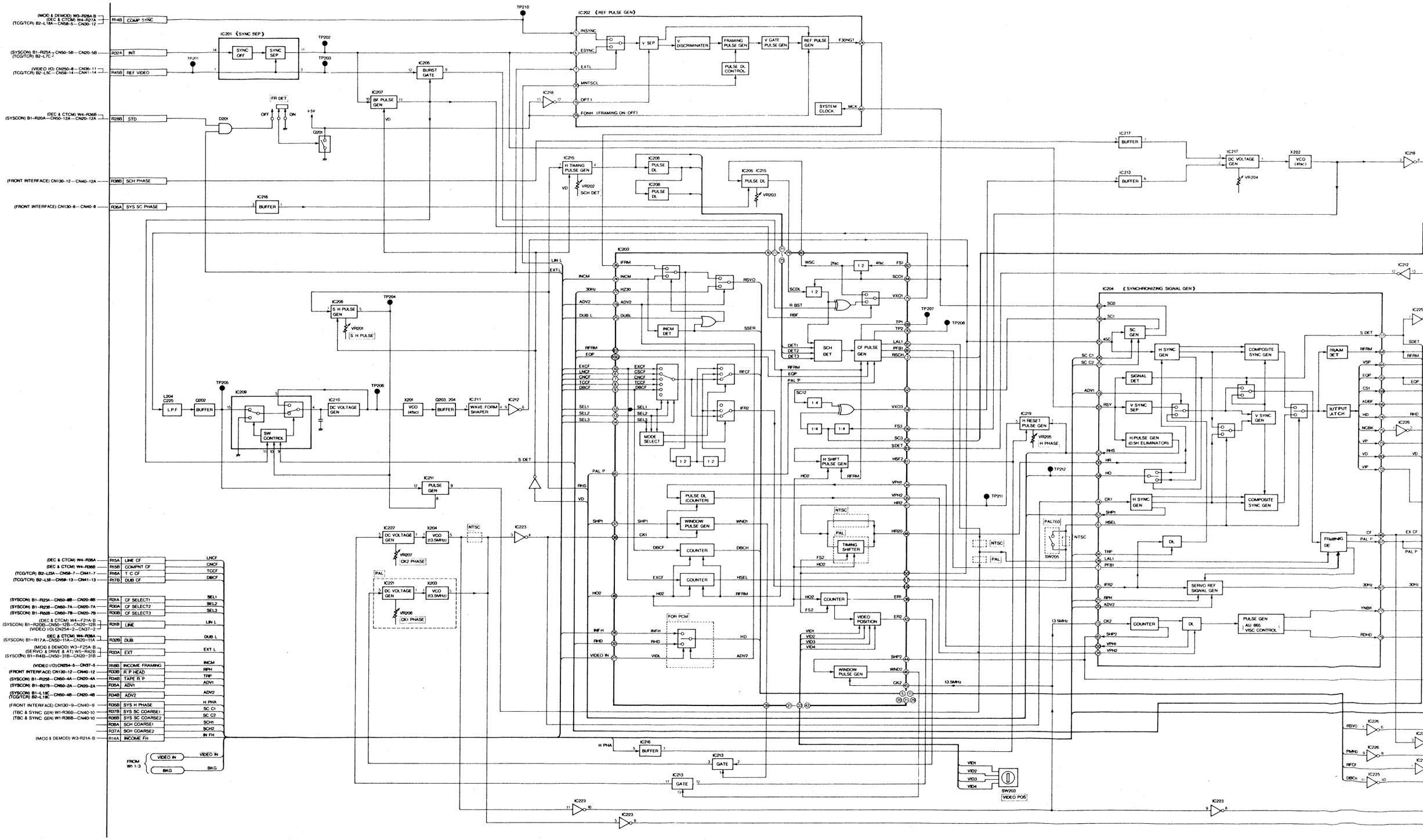

YNC GEN SECTION) [FOR AU-665 NTSC]

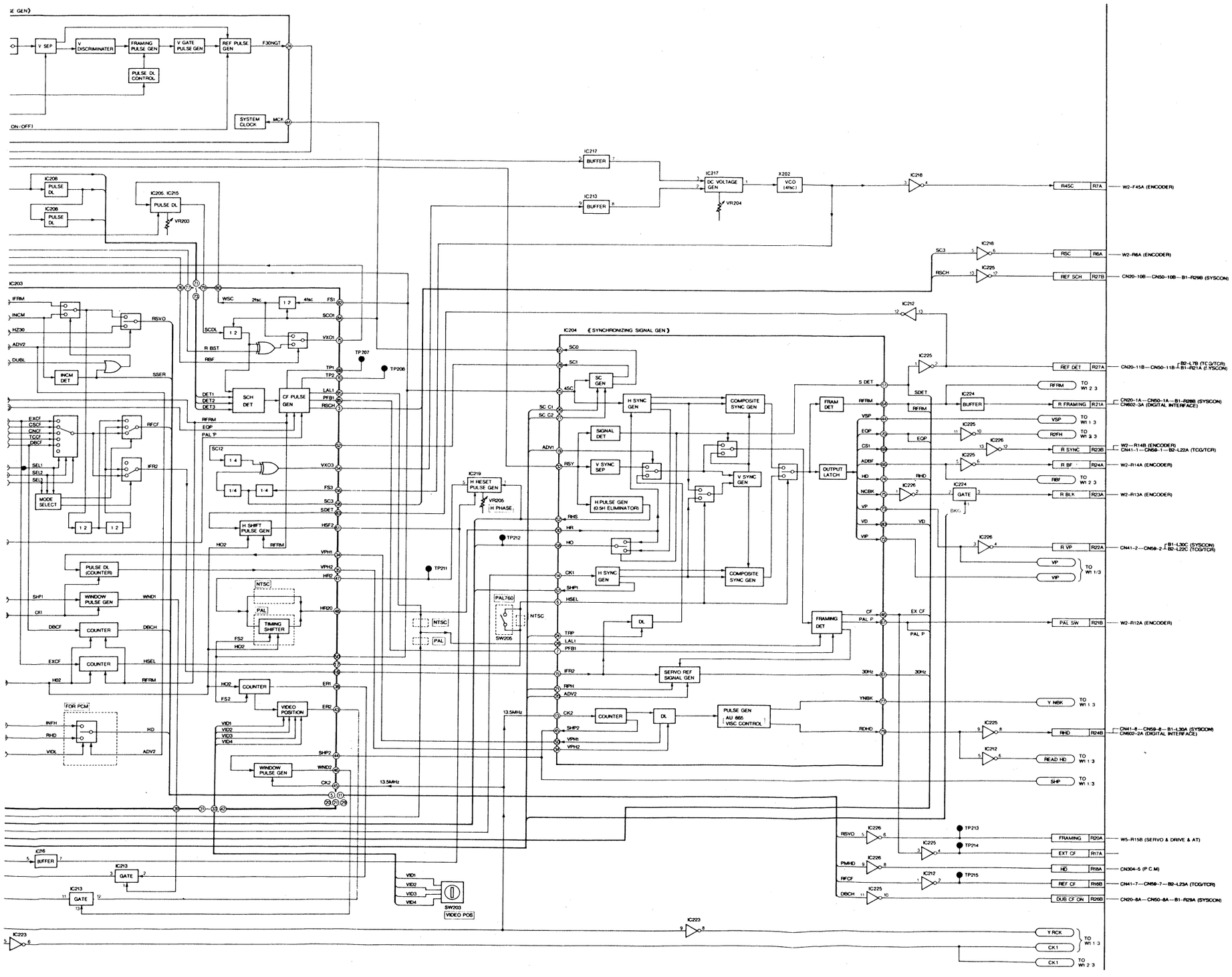

IC203 (μPD65024GF152)

PIN NO.	PIN NAME	IN/ OUT	DESCRIPTION	PIN NO.	PIN NAME	IN/ OUT	DESCRIPTION
3	RSCH	OUT	REFERENCE SCH	45	CK2	IN	CLOCK 2
5	DBCH	OUT	DUB COLOR FRAMING IN HIGH	46	WND2	OUT	WINDOW 2
6	OSCF	IN	COMPO SITE COLOR FRAMING	47	HR2	IN	H RESET 2
7	CNCF	IN	COMPONENT COLOR FRAMING (ID PULSE)	48	HR20	OUT	H RESET 2 OUTPUT
8	TCCF	IN	TIME CODE COLOR FRAMING	49	HO2	IN	HO SIGNAL (IC204 58P) INPUT NO. 2
9	DBCF	IN	DUB COLOR FRAMING	50	FS2	IN	FOUR SUB CARRIER NO. 2 (4 FSC)
10	EXCF	IN	EXTERNAL COLOR FRAMING	52	SCI2	IN	SC1 (IC204 78P) INPUT NO. 2
11	RFCF	OUT	REFERENCE COLOR FRAMING FOR SERVO	53	SCH1	IN	SCH COARSE CONTROL NO. 1
12	SEL1	IN	COLOR FRAMING SELECTOR SIGNAL	54	VXO3	OUT	CONTROL SIGNAL 3 FOR VXO
13	SEL2	IN	COLOR FRAMING SELECTOR SIGNAL	55	SCH2	IN	SCH COARSE CONTROL NO. 2
14	SEL3	IN	COLOR FRAMING SELECTOR SIGNAL	56	FS3	IN	FOUR SC NO. 3 (4 FSC)
16	IFR2	OUT	COLOR FRAMING SIGNAL FOR E-E	58	SC3	OUT	SUB CARRIER 3
19	ADV2	IN	ADVANCE 2	60	SCO2	IN	SUB CARRIER O (IC204 65P) INPUT NO. 2
20	RSVO	OUT	REFERENCE FOR SERVO VO (30Hz)	61	HSF2	OUT	H SHIFT PROTECTION SIGNAL 2
21	SSER	OUT	IMCM SIGNAL (24P) IN Ⓗ	69	TP1	OUT	TEST POINT 1 (FOR SCH ADJ.)
22	HZ30	IN	30Hz	70	TP2	OUT	TEST POINT 2 (FOR SCH ADJ.)
24	INCM	IN	INCOME 30Hz	71	DET1	IN	DETECTION FOR SUB CARRIER POLARITY (H TIMING PULSE)
25	DUBL	IN	DUB LOW	72	DET2	IN	DETECTION FOR SUB CARRIER POLARITY (H TIMING PULSE)
26	IFRM	IN	INCOME FRAME (REF 30Hz)	73	DET3	IN	DETECTION FOR SUB CARRIER POLARITY (H TIMING PULSE)
27	VIDL	IN	DELAYED VERTICAL INTERVAL	74	PALP	IN	PAL PULSE
28	INFH	IN	INCOME FRAMING	75	VXO1	OUT	CONTROL SIGNAL 1 FOR VXO
29	HD	OUT	HORIZONTAL DRIVE PULSE	76	RBF	IN	REFERENCE VIDEO BURST FLAG
30	RHD	IN	HORIZONTAL DRIVE PULSE (= TBC READ TIMING)	77	RBST	IN	REFERENCE VIDEO BURST
31	VID1	IN	VIDEO ϕ1	79	SCDL	IN	DELAYED 2FSC
32	VID2	IN	VIDEO ϕ2	80	WSC	OUT	DOUBLE SUB CARRIER (2 FSC)
33	VID3	IN	VIDEO ϕ3	81	SELM	IN	SELECT MODE (NTSC Ⓛ PAL Ⓗ)
34	VPH1	IN	VIDEO PHASE 1	82	FS1	IN	FOUR SUB CARRIER 1 (4 FSC)
35	VPH2	OUT	VIDEO PHASE 2	83	SDET	IN	SYNC DETECTION
36	CK1	IN	CLOCK 1	84	SCO1	IN	SUB CARRIER O (IC204 65P) INPUT NO. 1
37	SHP1	IN	SAMPLE HOLD PULSE 1	85	PFB1	OUT	COLOR FRAMING RESET PULSE (PAL)
38	ER1	OUT	ERROR 1	95	LALI	OUT	COLOR FRAMING RESET PULSE (NTSC)
39	WND1	OUT	WINDOW 1	96	CF1	IN	COLOR FRAMING 1
42	VID4	IN	VIDEO ϕ4	97	RFRM	IN	REFERENCE FRAME
43	ER2	OUT	ERROR 2	100	EQP	IN	EQUALIZING PULSE
44	SHP	IN	SAMPLE HOLD PULSE 2				

IC204 SYNC GEN GATE ARRAY PIN FUNCTION (μPD65040GF144)

PIN NO.	PIN NAME	IN OUT	FUNCTION	PIN NO.	PIN NAME	IN OUT	FUNCTION
1	RST	IN	TEST RESET	41	RHS	OUT	REFERENCE H.SYNC
2	VDD	IN	+5V	42	VDD	IN	+5V
3	GND			43	GND		
4	MODI	IN	[0] NTSC [1] PAL	44	VSP	OUT	V SEPARATION PULSE
5	MOD2	IN	[0] NTSC [1] PAL	45	SHP2	OUT	CK2 SAMPLE & HOLD PULSE 2
6	HSEL	IN	H SYNC SELECT	46	CF	OUT	COLOR FRAMING SIGNAL
7	PFBW	IN	V-BLK SET (NTSC) COLOR FRANING CONT. (PAL)	47	SSEL	IN	HR ADJUST RANGE
				48	CS2	OUT	COMPOSITE SYNC
8	LSEL	IN	V-SYNC SELECT	49	LPF1	IN	LPF FOR FRAMING
9	CKSW	IN	VIDEO PHASE CLOCK SELECT	50	VPH1	IN	VIDEO PHASE MMV
10	TST1	IN	TEST CONTROL	51	SDET	OUT	REF SYNC DETECT
11	TST2	IN	TEST CONTROL	52	RHS	OUT	REF H SYNC W/O EQ PULSE
12	BDET	IN	BURST DETECT	53	CBU	OUT	1.125MHz
13	CK2	IN	13.5MHz CLOCK	54	YBU	OUT	2.25MHz
14	CK1	IN	13.5MHz CLOCK	55	CBF	OUT	C BURST FLAG
15	IFR2	IN	INCOME VIDEO FRAMING	56	YBF	OUT	Y BURST FLAG
16	LPF2	IN	LPF FOR FRAMING	57	SHP1	OUT	CK1 SAMPLE & HOLD PULSE
17	SSER	IN	SOURCE SEARCH 30Hz SELECT	58	HO	OUT	TRAPEZOIDE H PULSE
18	PINH	IN	VISC CONTROL ON/OFF	59	IFR1	OUT	IN VIDEO FRAMING
19	ADV1	IN	ADVANCE 1 FOR V_s SELECT	60	RYS	OUT	R-Y (I_N) SYNC
20	ADV2	IN	ADVANCE 2 FOR 30Hz SELECT	61	30Hz	OUT	SERVO CONTROL 30Hz
21	RPH	IN	R/P HEAD SELECT	62	GND		
22	GND			63	VDD	IN	+5V
23	VDD	IN	+5V	64	RFRM	OUT	REFERENCE FRAMING
24	TRP	IN	TRAPEZOIDE FOR PLL	65	SC0	OUT	SUB CARRIER
26	SCC1	IN	SC PHASE CONTROL	66	ADBF	OUT	ADVANCE BURST FLAG
27	SCC2	IN	SC PHASE CONTROL	67	PALP	OUT	PAL PULSE (0.5fH)
28	LAL1	IN	COLOR FRAMING RESET	68	CNBK	OUT	CHROMA DIGITAL BLANKING
29	IVS	IN	INCOME VIDEO V SYNC	69	CS1	OUT	COMPSYNC
30	HR	IN	H.SYNC RESET	70	EQP	OUT	EQUALIZER PULSE
31	ISY	IN	IN VIDEO COMP SYNC	71	BF	OUT	BURST FLAG
32	RSY	IN	REF VIDEO COMP SYNC	72	VIP	OUT	10 LINE PULSE
33	GND			73	VP	OUT	V PULSE
34	VPH2	IN	VIDEO PHASE MMV	74	HD	OUT	HORIZONTAL DRIVE
35	PST1	IN	VISC CONTROL 90° STEP	75	NCBK	OUT	COMBLANKING SIGNAL
36	PST2	IN	VISC CONTROL 90° STEP	76	CBK	OUT	COMBLANKING SIGNAL
37	ADS1	IN	ADVANCE SET	77	YNBK	OUT	Y DIGITAL BLANKING
38	ADS2	IN	ADVANCE SET	78	SC1	OUT	SUB CARRIER
39	ADS3	IN	ADVANCE SET	79	RDHD	OUT	TBC READ START
40	ADS4	IN	ADVANCE SET	80	VD	OUT	VERTICAL DRIVE

W2 SUB(9BIT A/D) BLOCK DIAGRAM[FOR AU-665 NTSC]

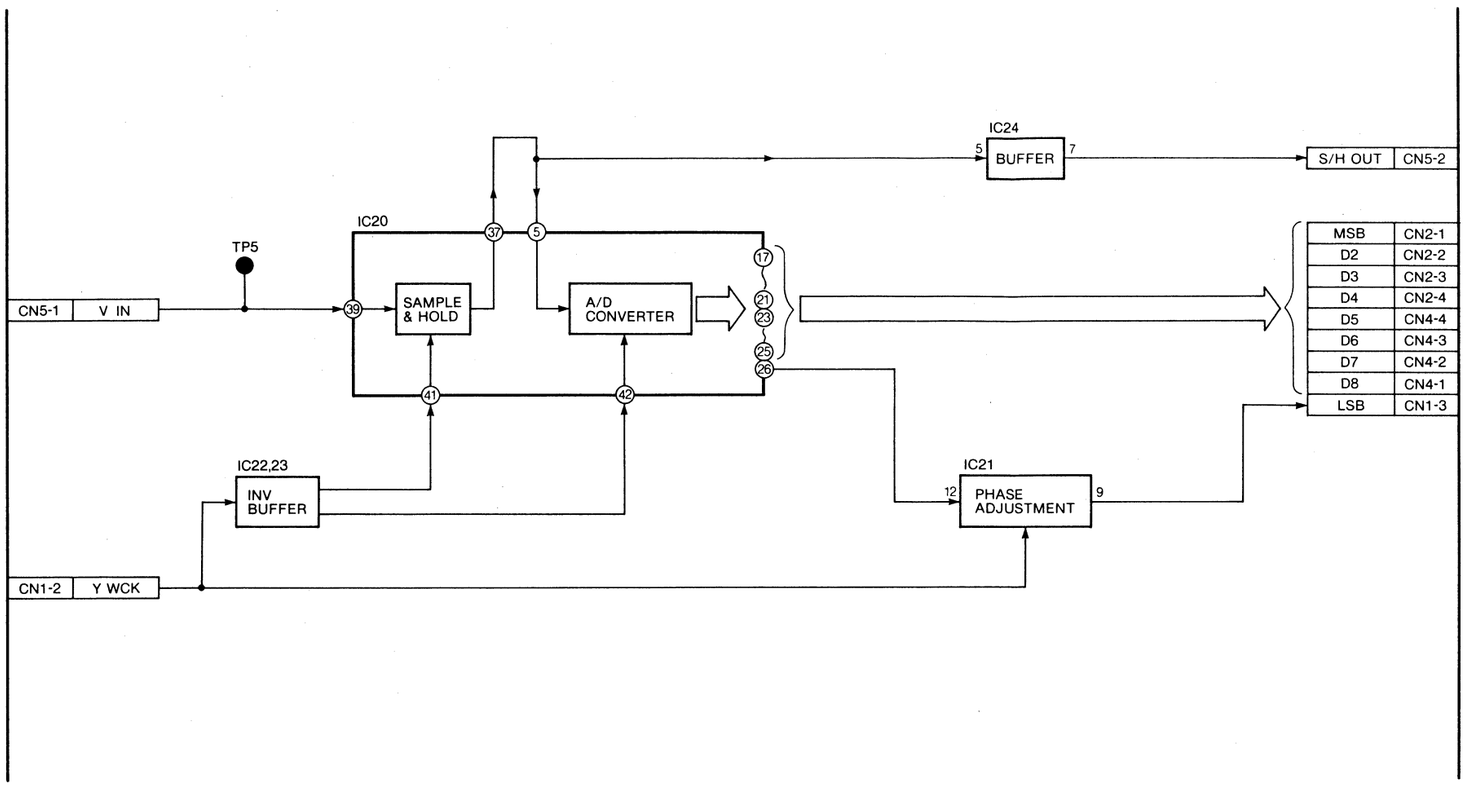

W2 (ENC

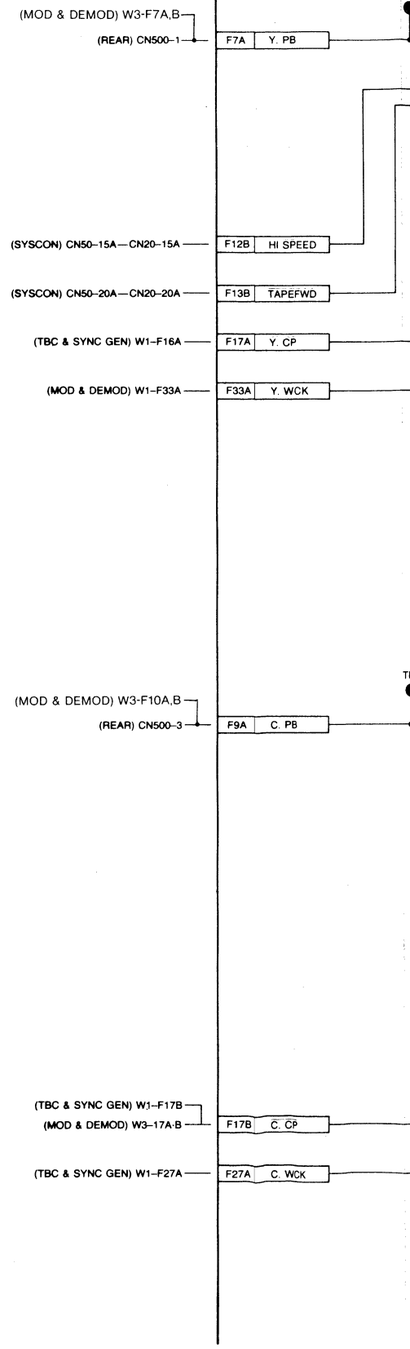

W2 (ENCODER) BLOCK DIAGRAM 1/3 (A/D SECTION)

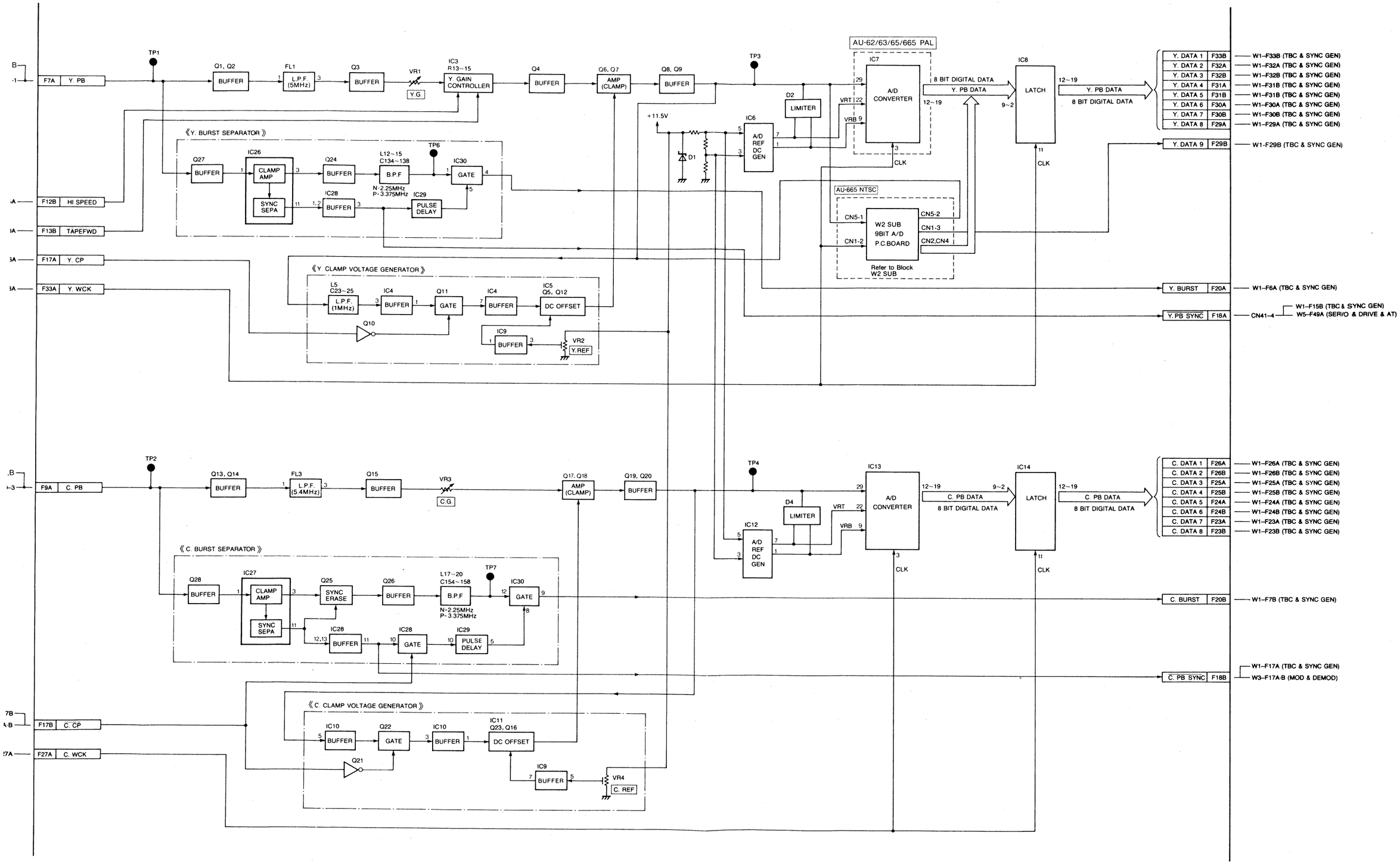

W2 (ENCODER) BLOCK DIAGRAM

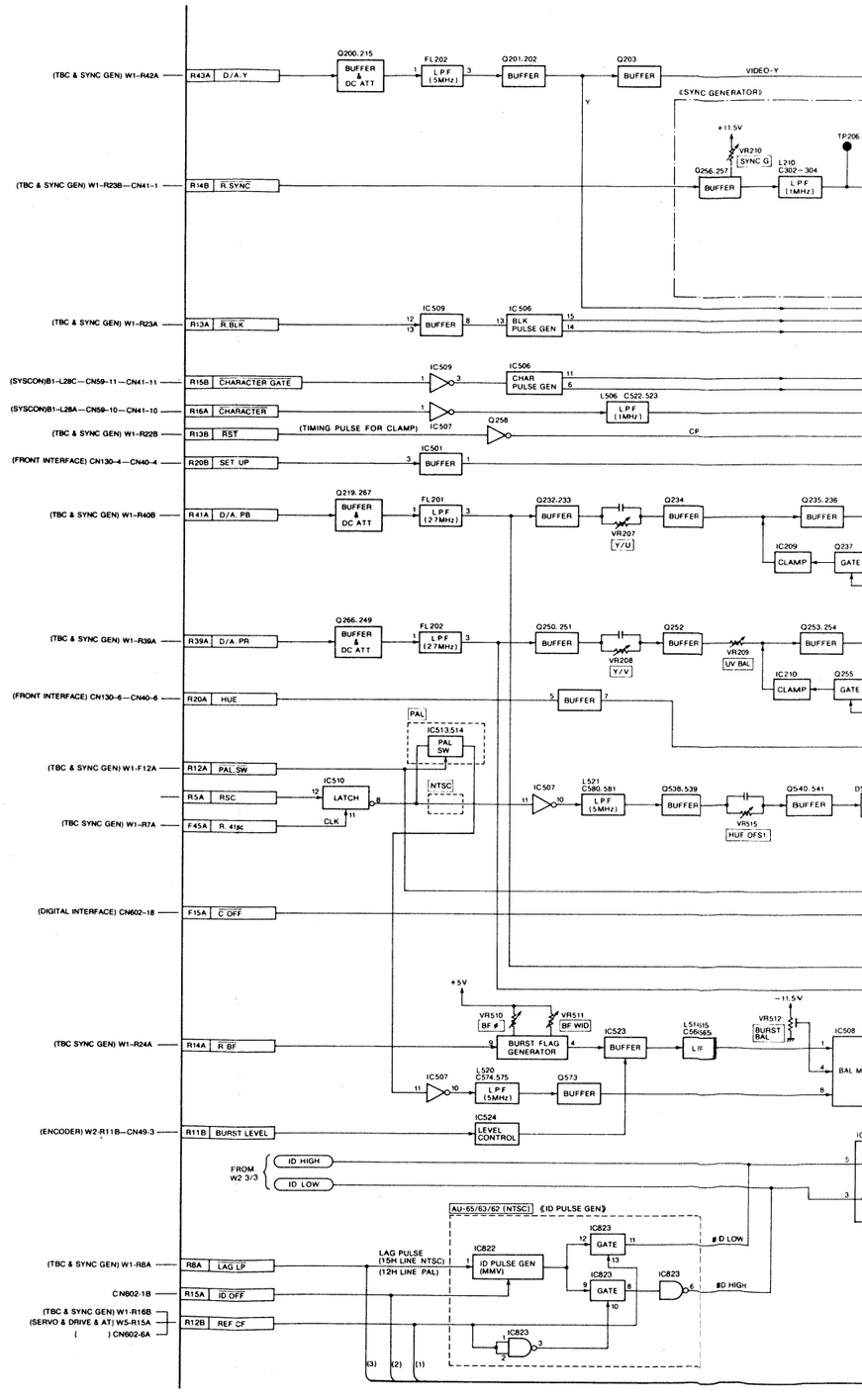

(DIAGRAM 2/3 (ENCODE SECTION)

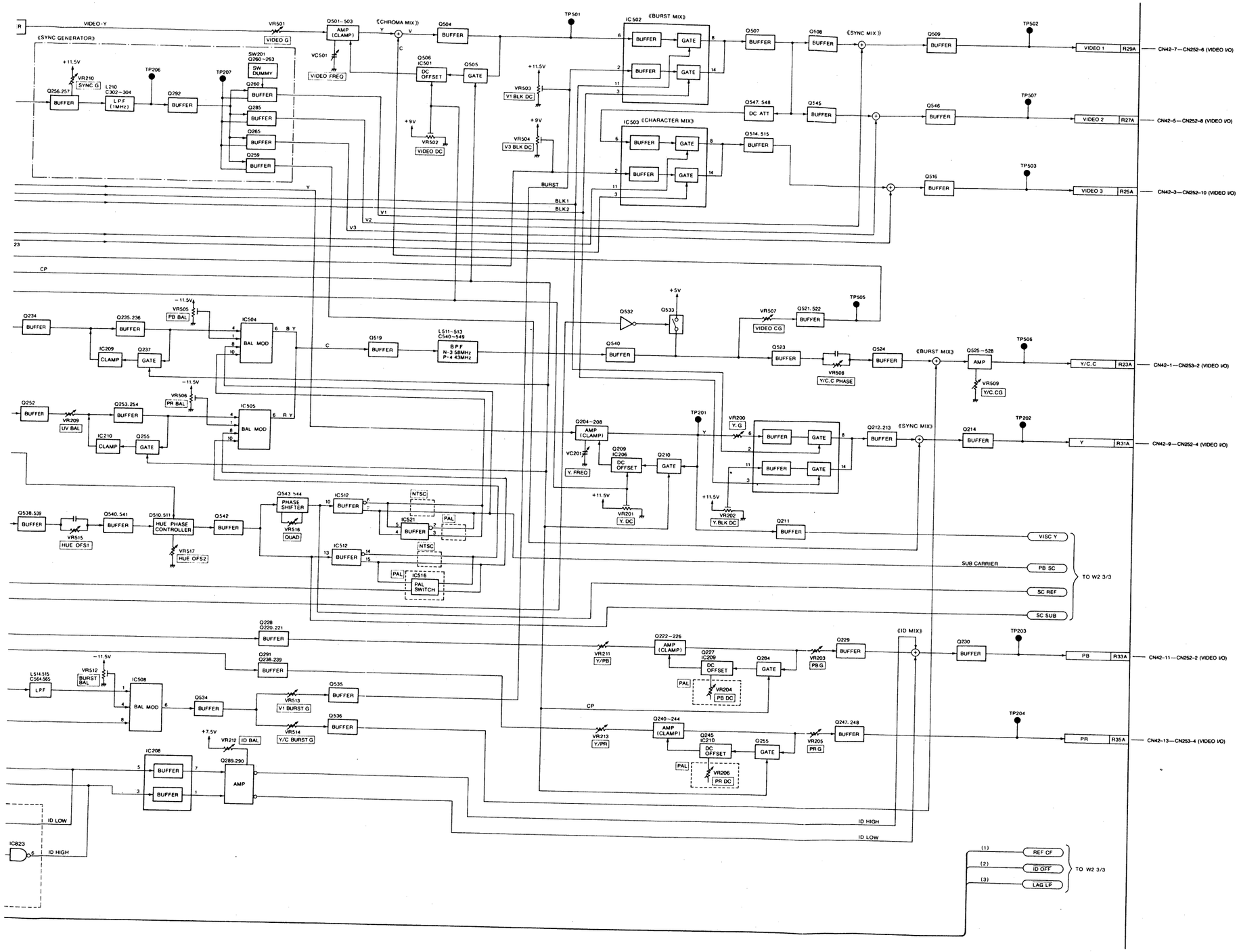

W2 (ENCODER) BLOCK DIAGRAM 3/3 (VISC SECTION)

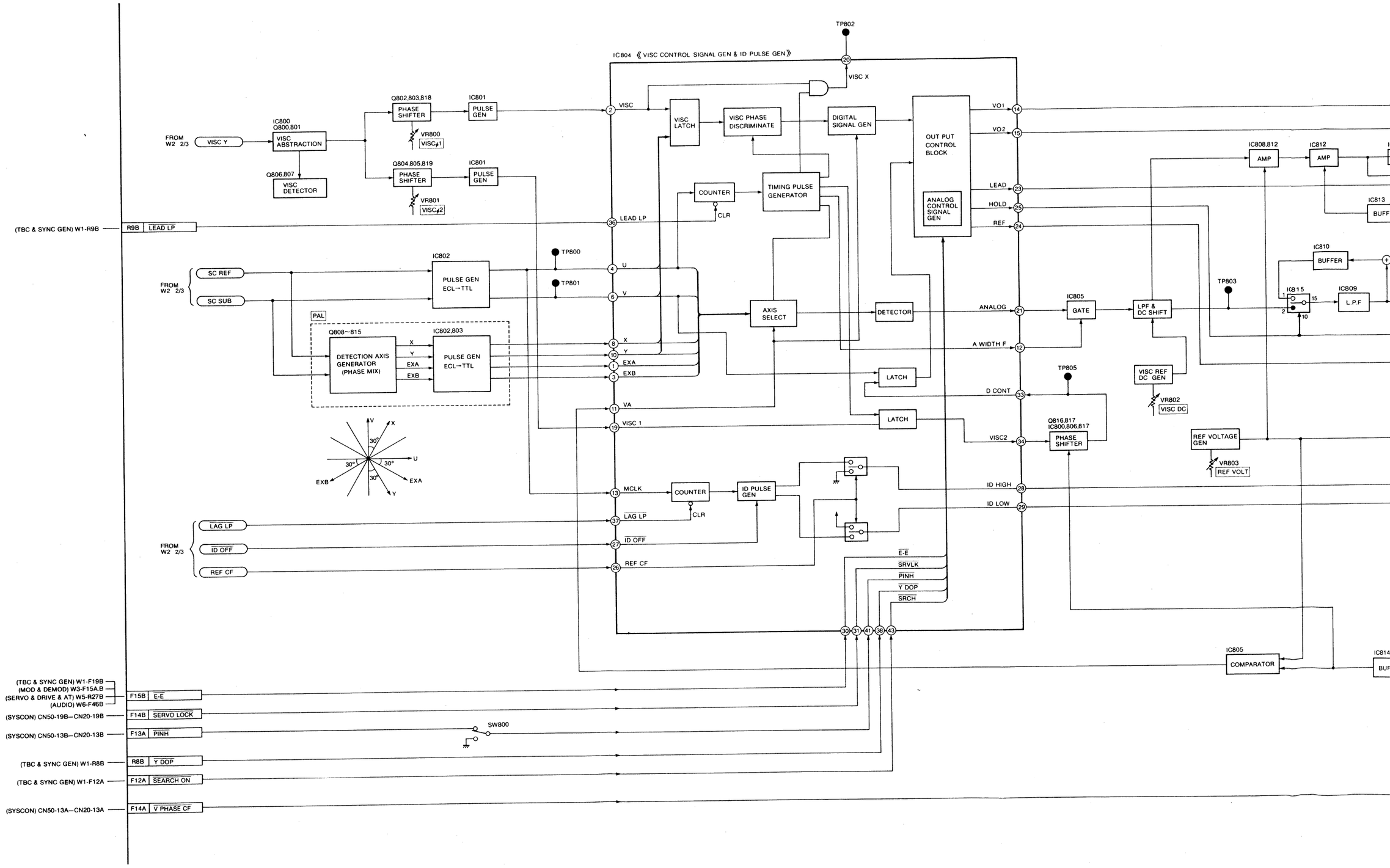

ɜRAM 3/3 (VISC SECTION)

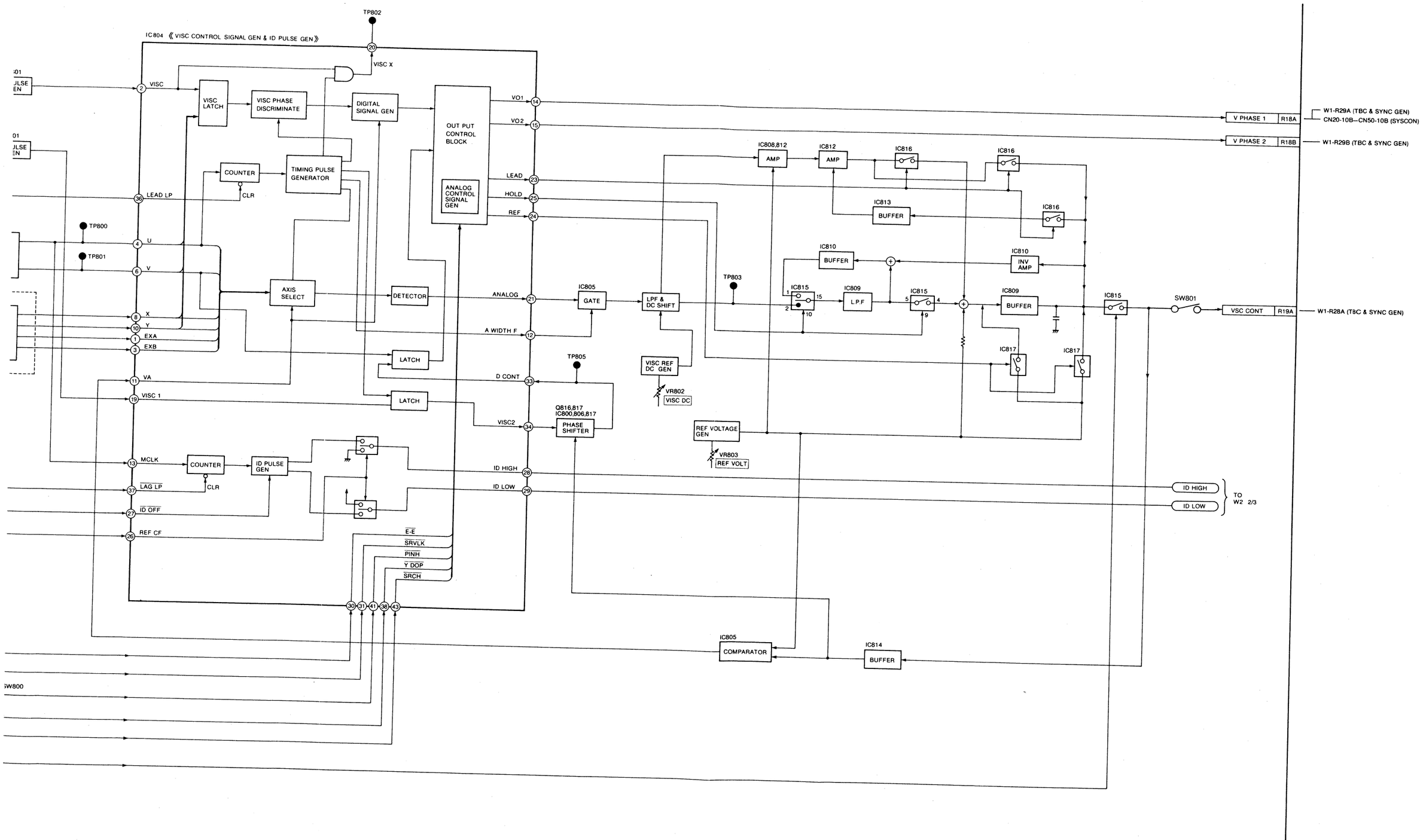

REVERSE SIDE MOD & DI BLOCK DI

W3 (MOD & DEMOD) BLOCK DIAGRAM 1/3 (MODULATION SECTION)

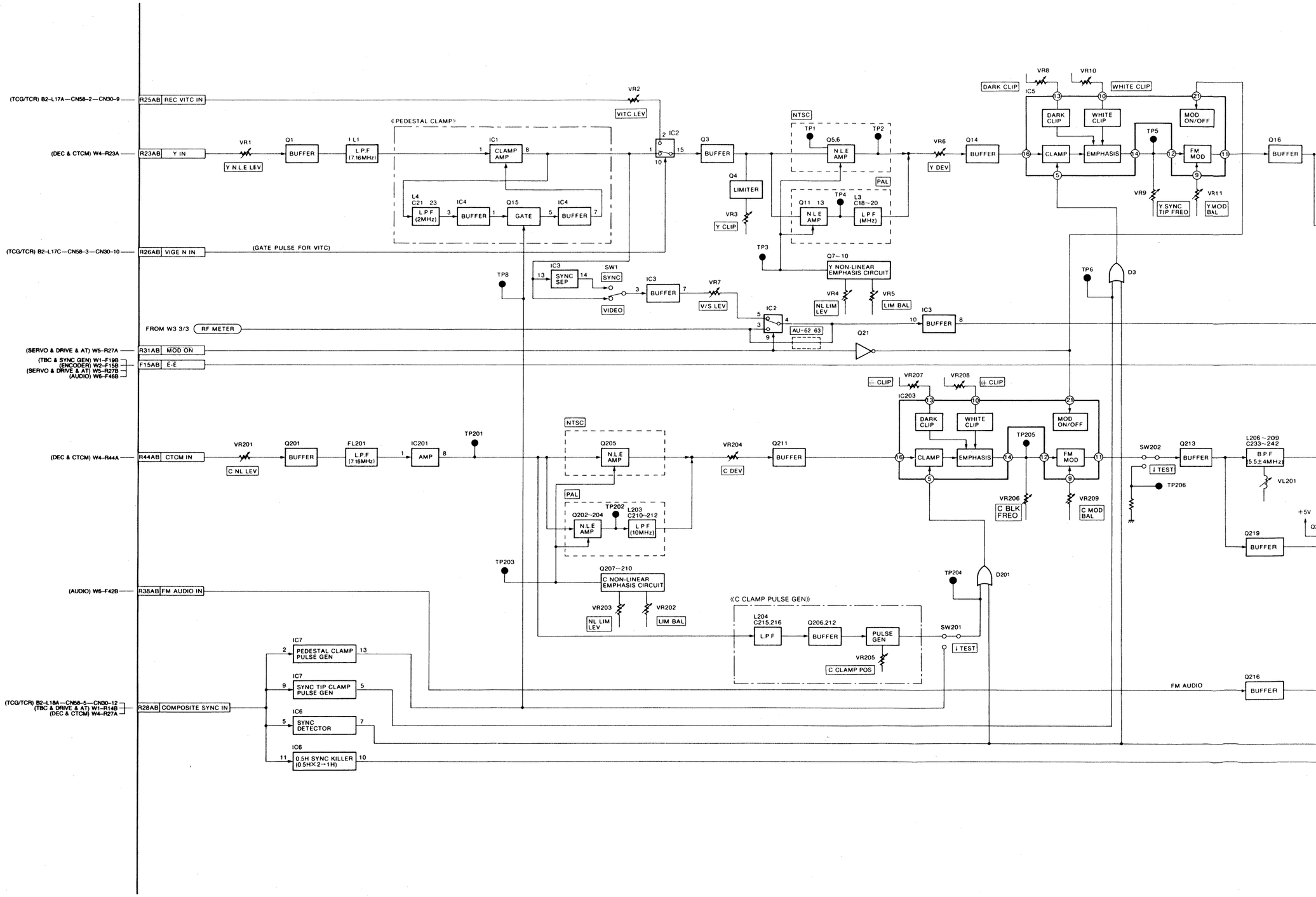

_OCK DIAGRAM 1/3 (MODULATION SECTION)

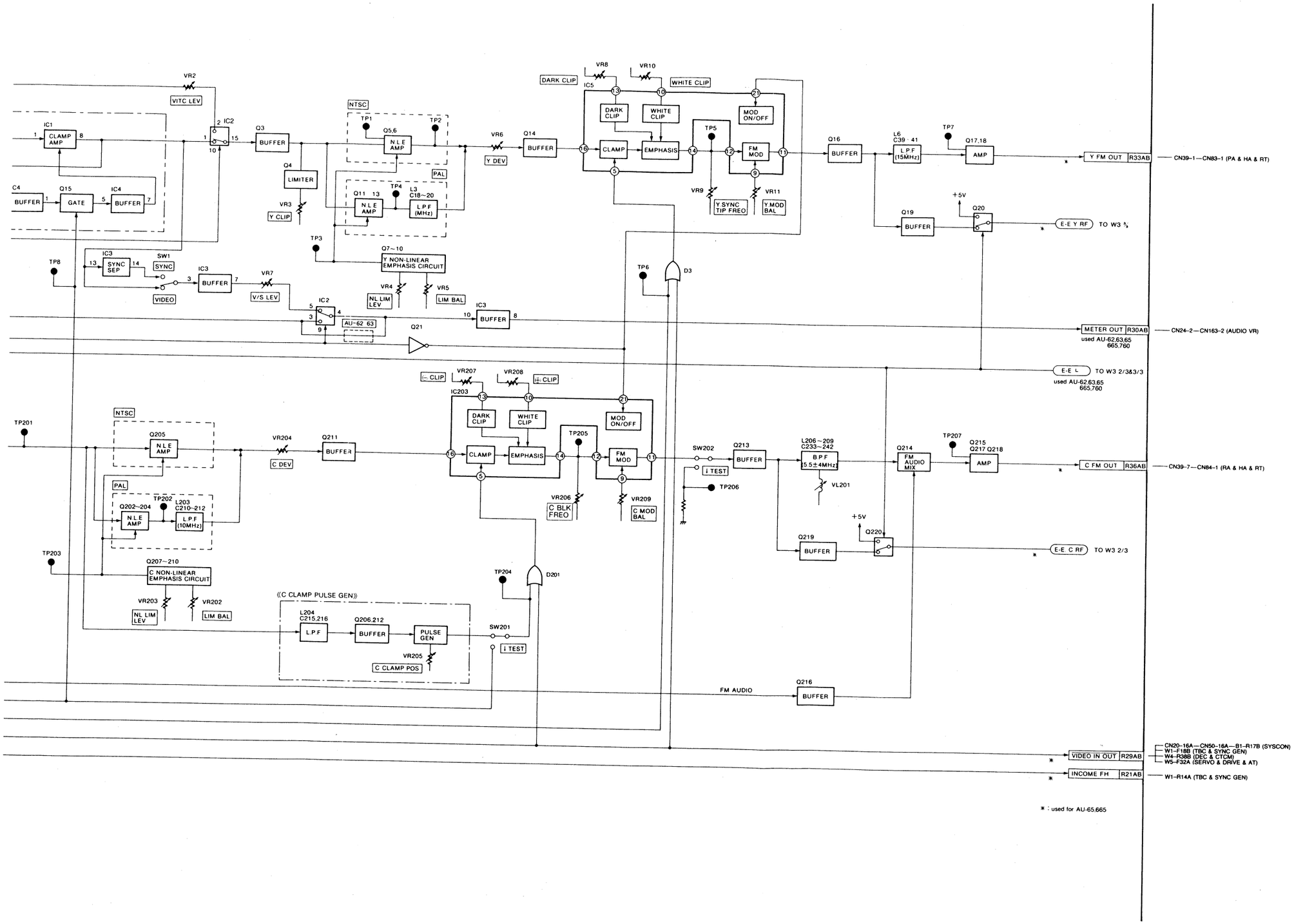

W3(MOD & DEMOD) BLOCK DIAGRAM 2/3 (C PLAYBACK SECTION)

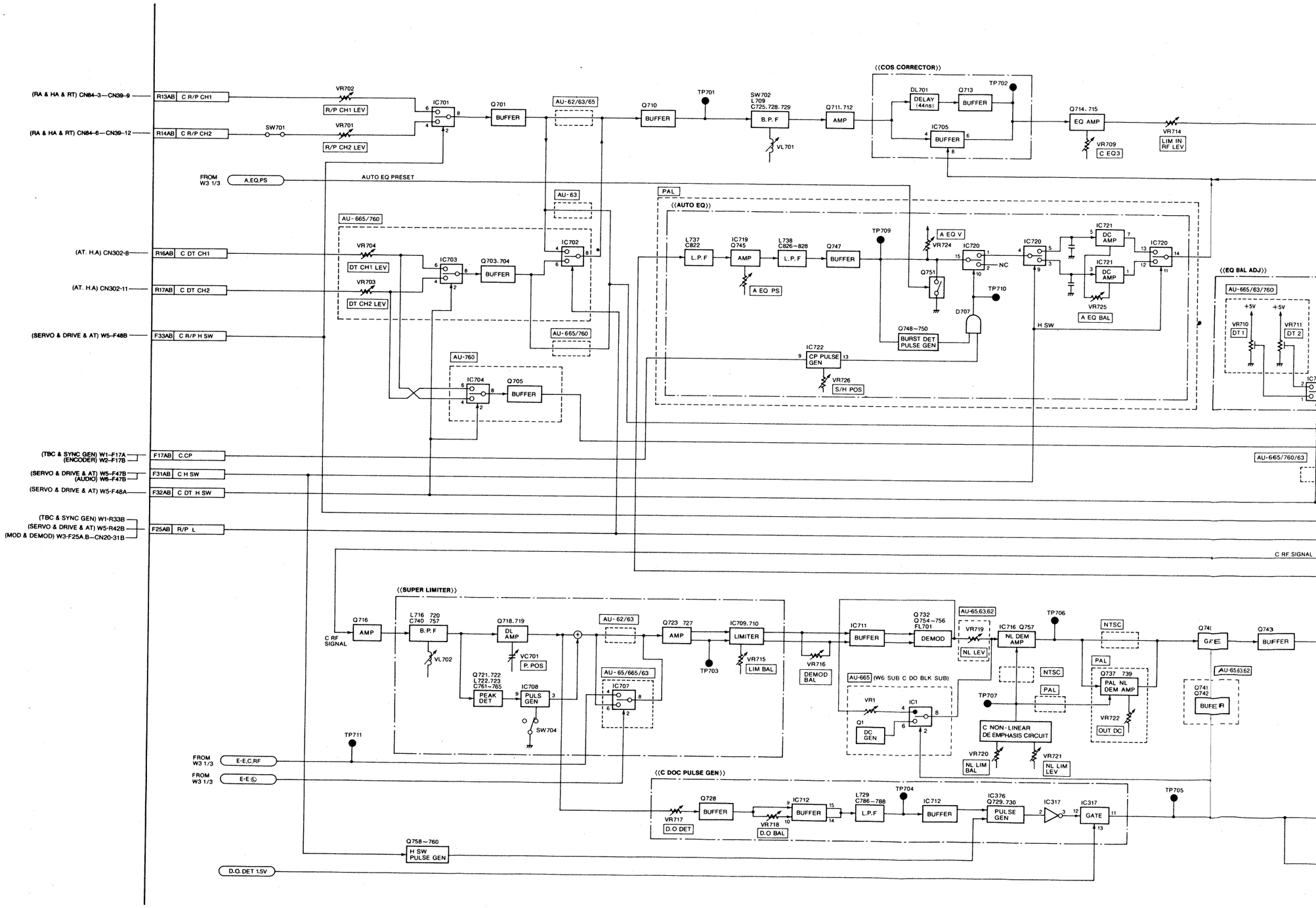

MOD) BLOCK DIAGRAM 2/3 (C PLAYBACK SECTION)

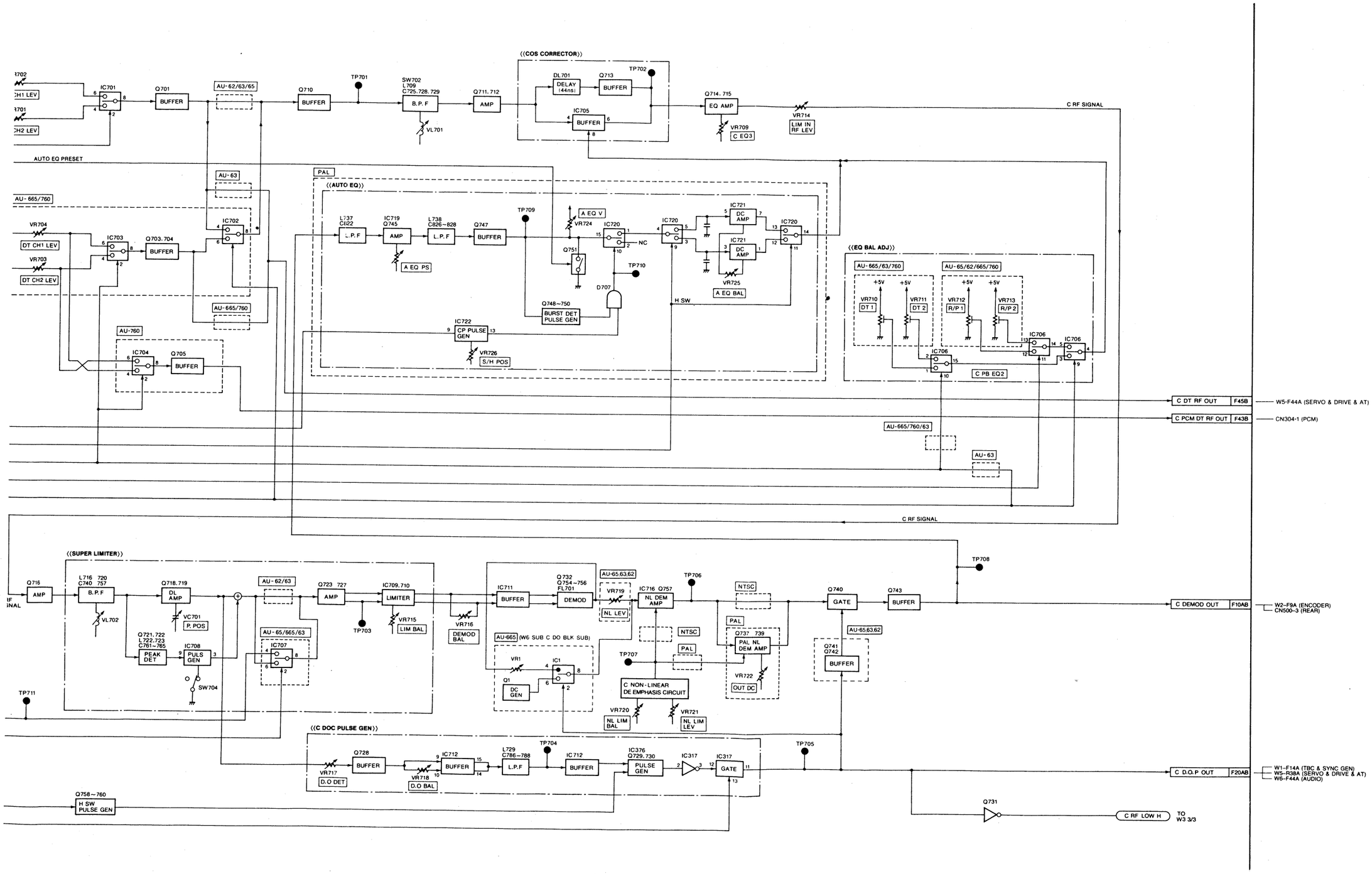

REVERSE SIDE MOD & D BLOCK D

W3(MOD & DEMOD) BLOCK DIAGRAM 3/3 (Y PLAYBACK SECTION)

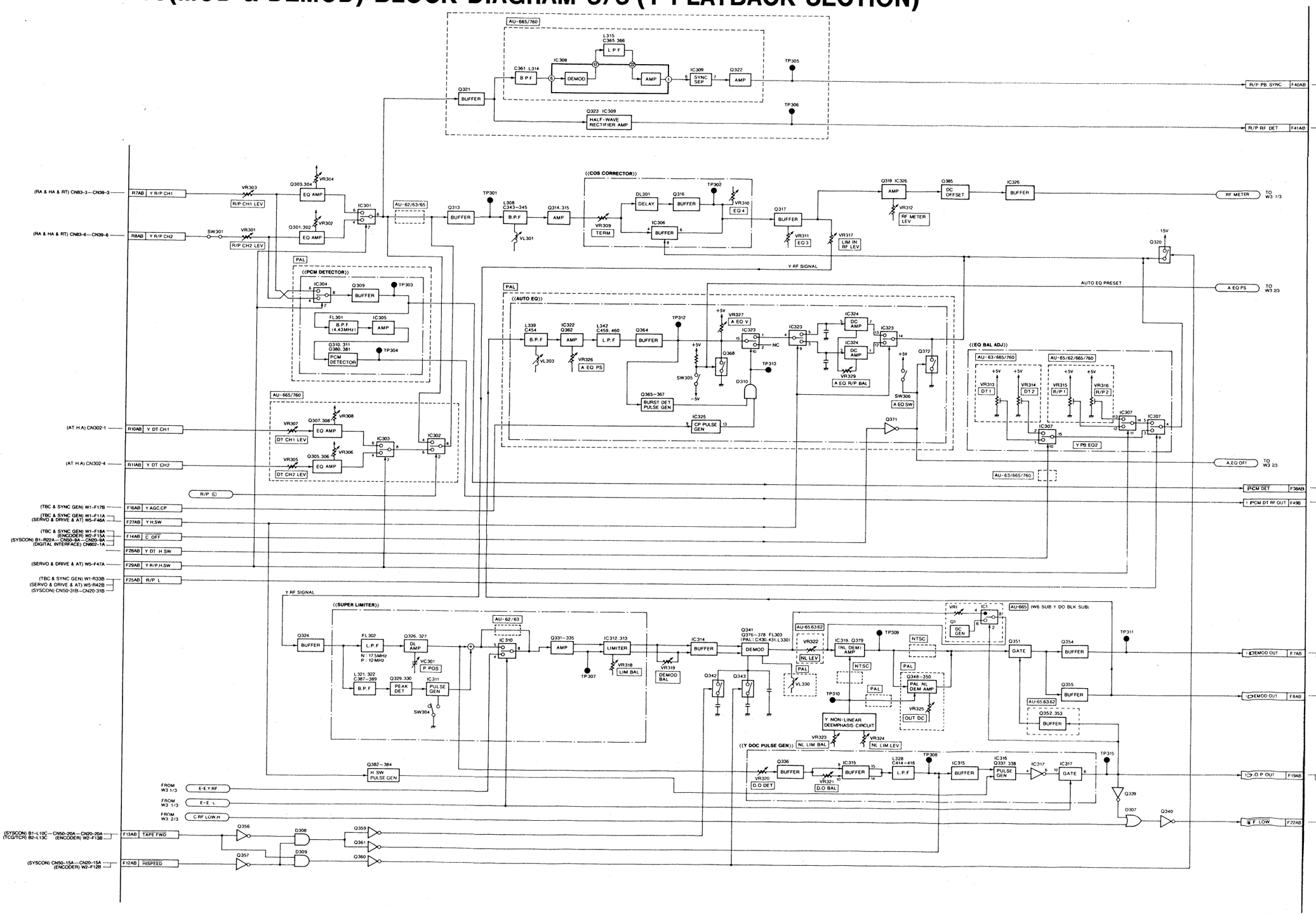

IAGRAM 3/3 (Y PLAYBACK SECTION)

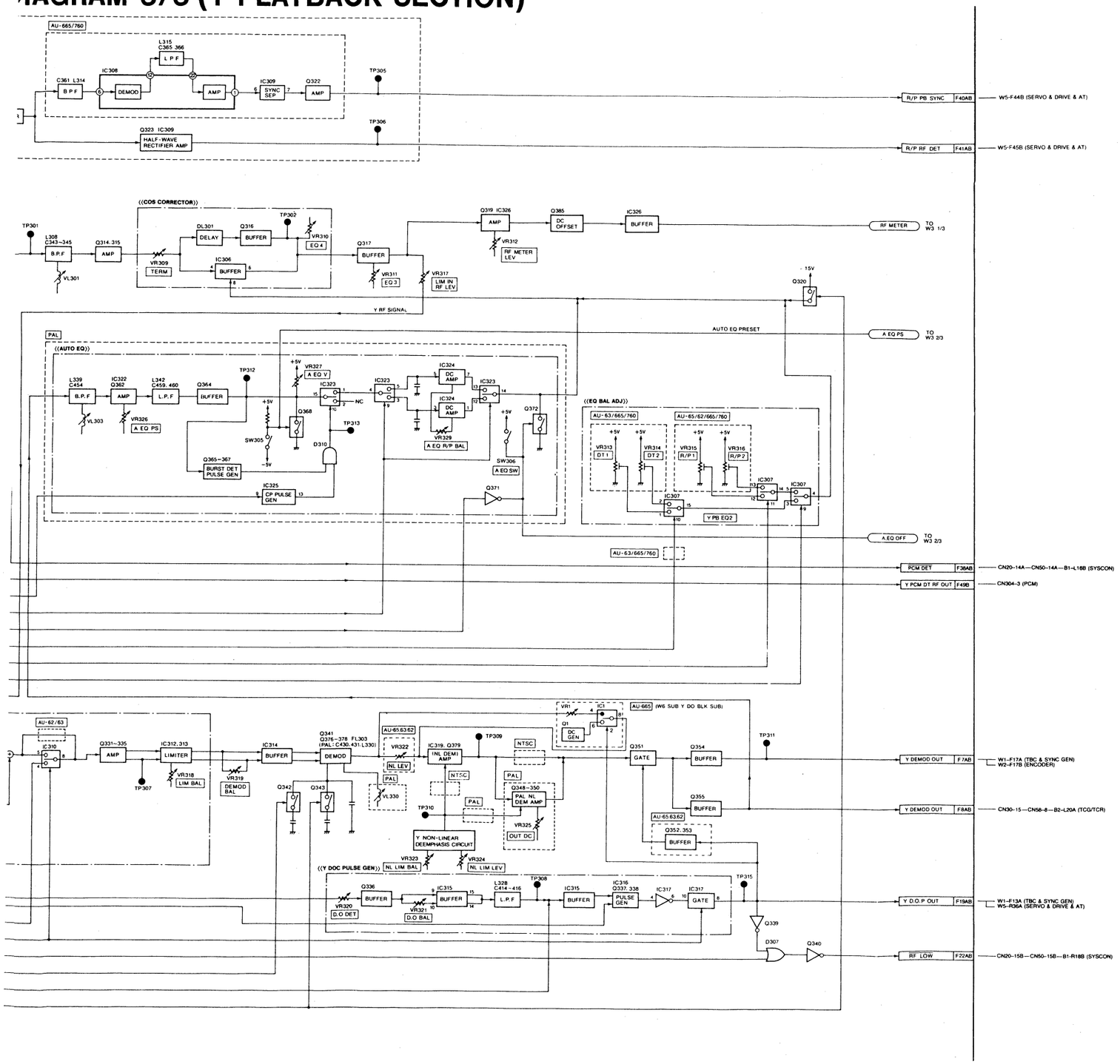

W4 (DEC & CTCM) BLOCK DIAGRAM 1/4 (CHROMA SEP SECTION) [FOR AU-65, AU-665 (NTSC)]

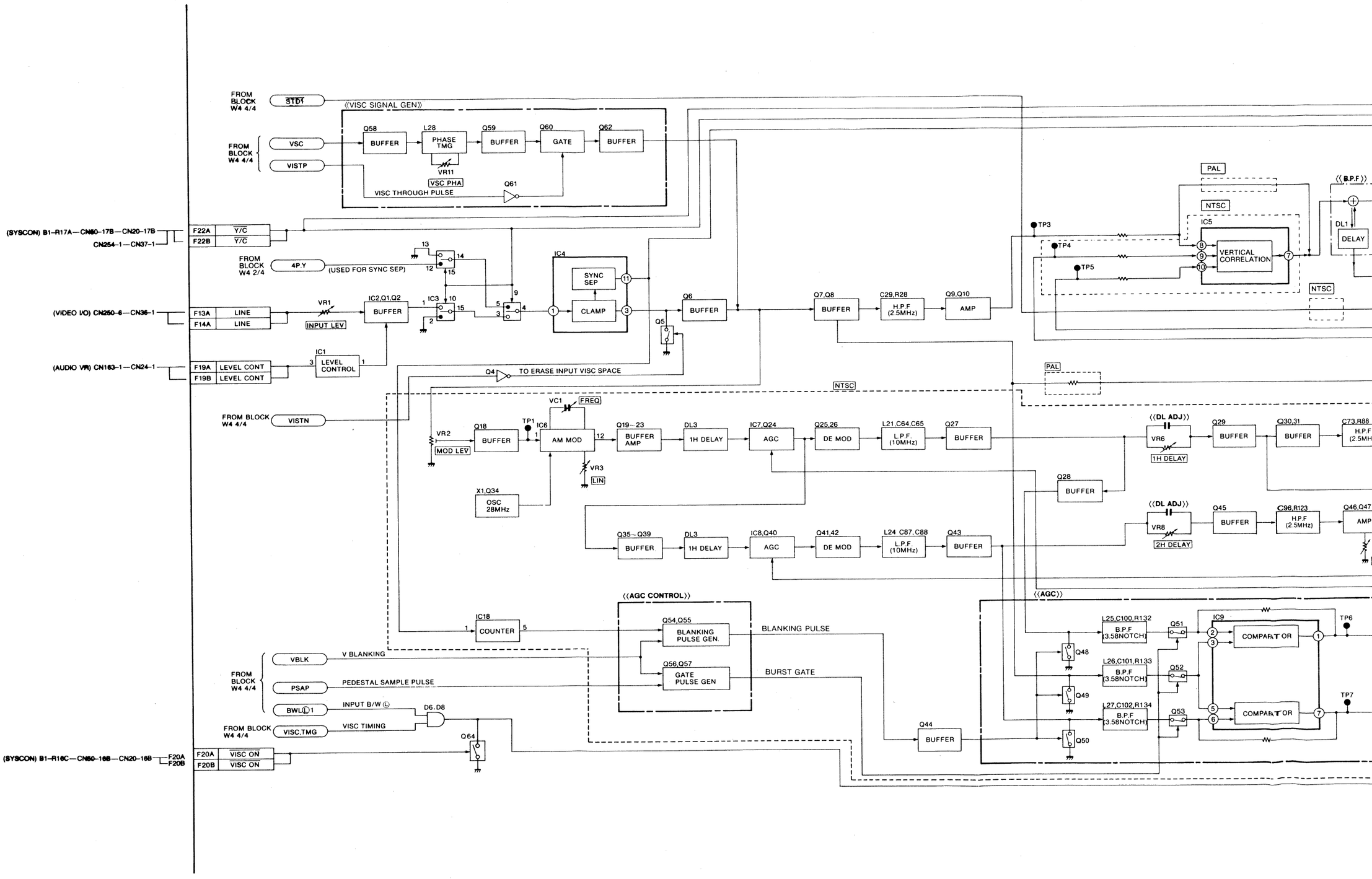

BLOCK DIAGRAM 1/4 (CHROMA SEP SECTION) [FOR AU-65, AU-665 (NTSC)]

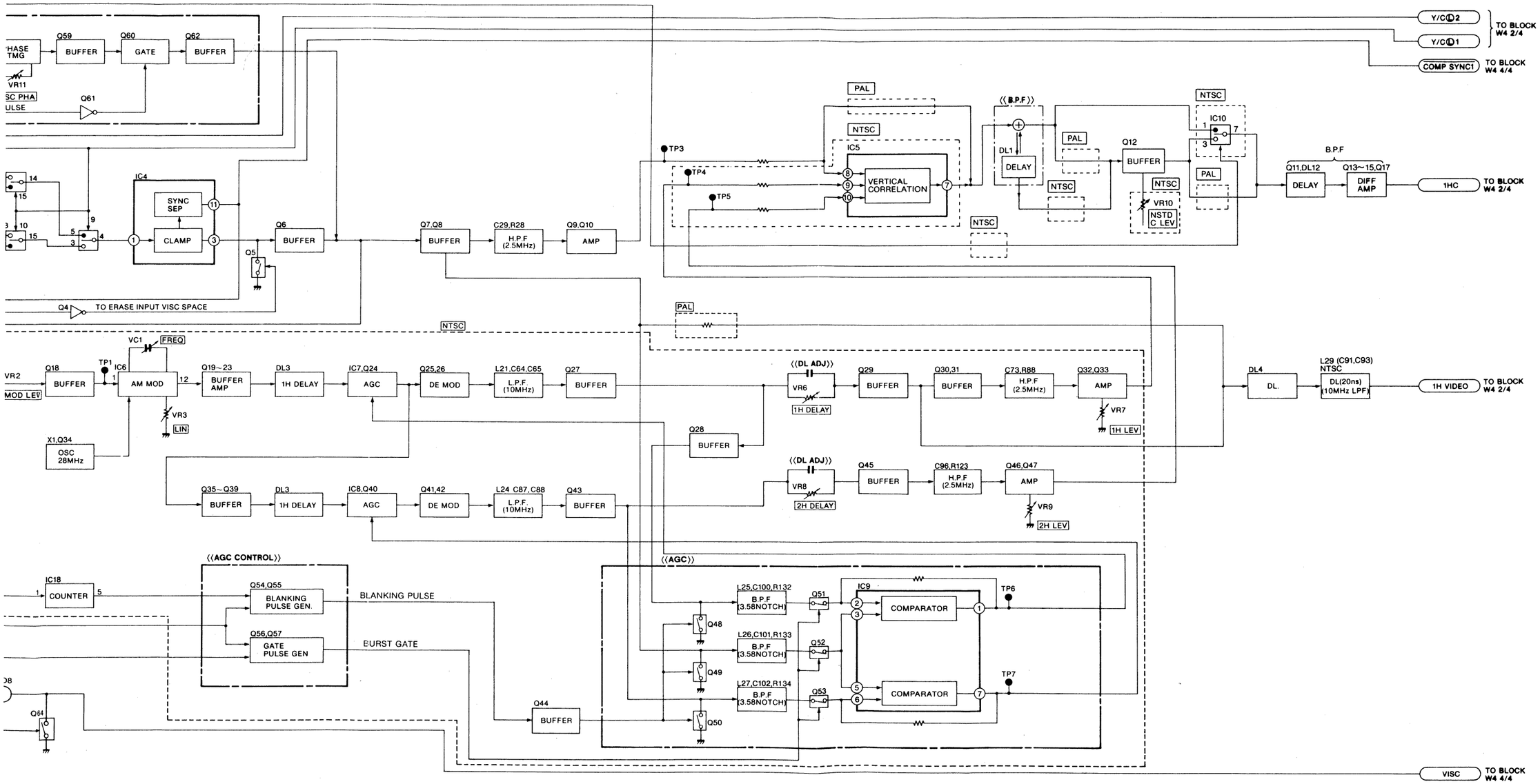

REVERSE SIDE DEC & BLOCK

W4 (DEC & CTCM) BLOCK DIAGRAM 2/4 (Y,P_B,P_R DECODER SECTION) [FOR AU-65, AU-665 (NTSC)]

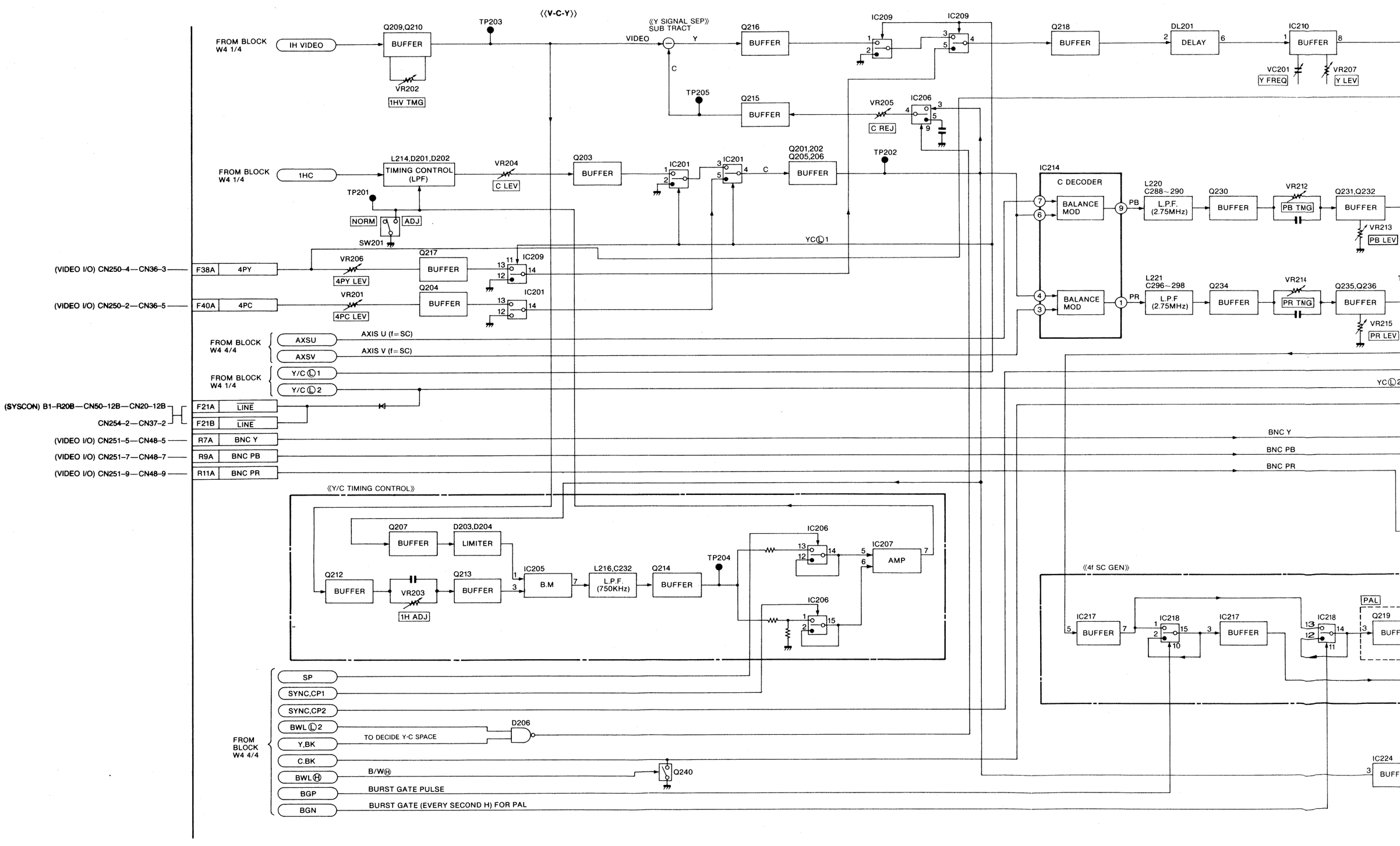

AM 2/4 (Y,P_B,P_R DECODER SECTION) [FOR AU-65, AU-665 (NTSC)]

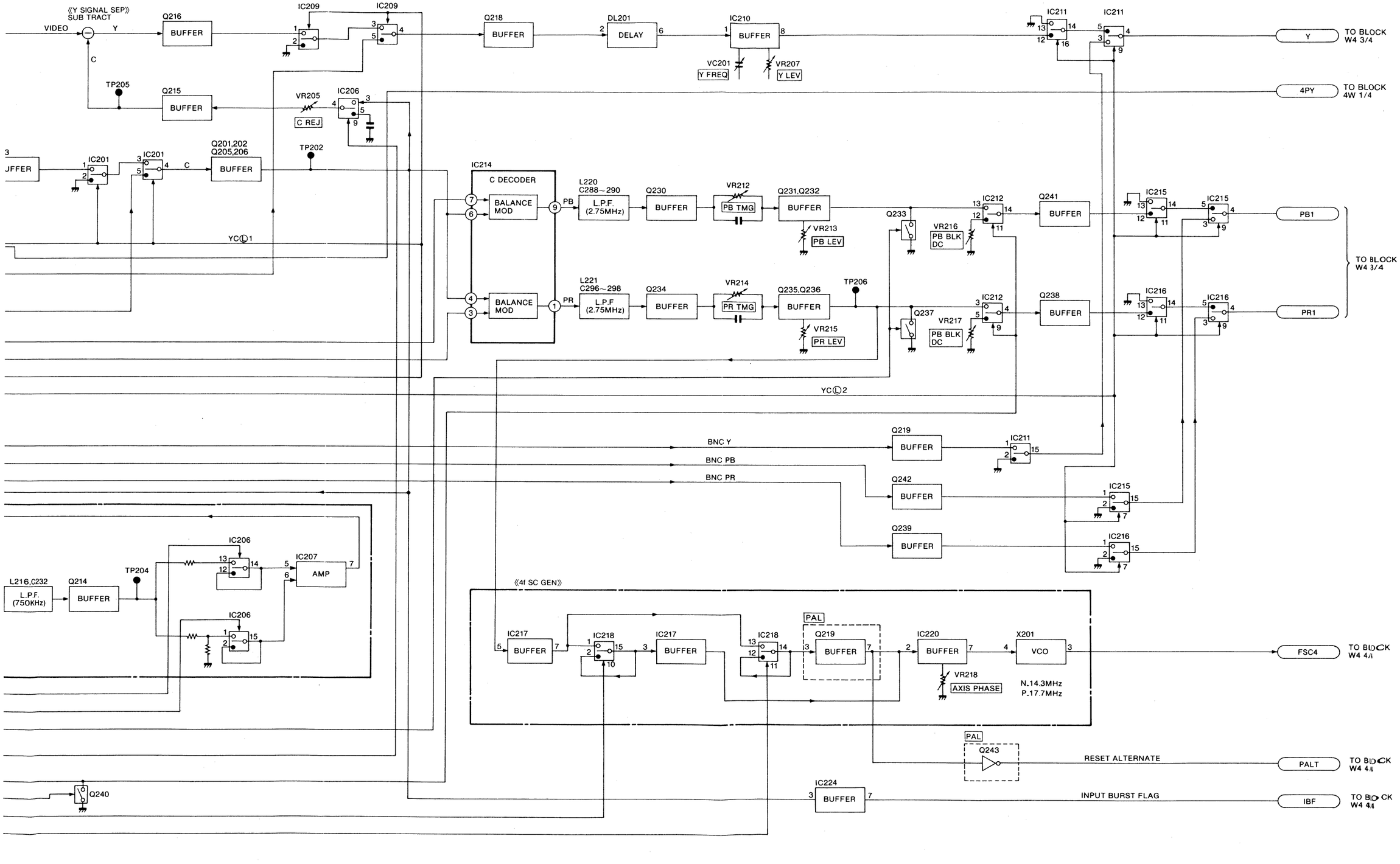

CM) BLOCK DIAGRAM 3/4 (CTCM SECTION) [FOR AU-65, AU-665 (NTSC)]

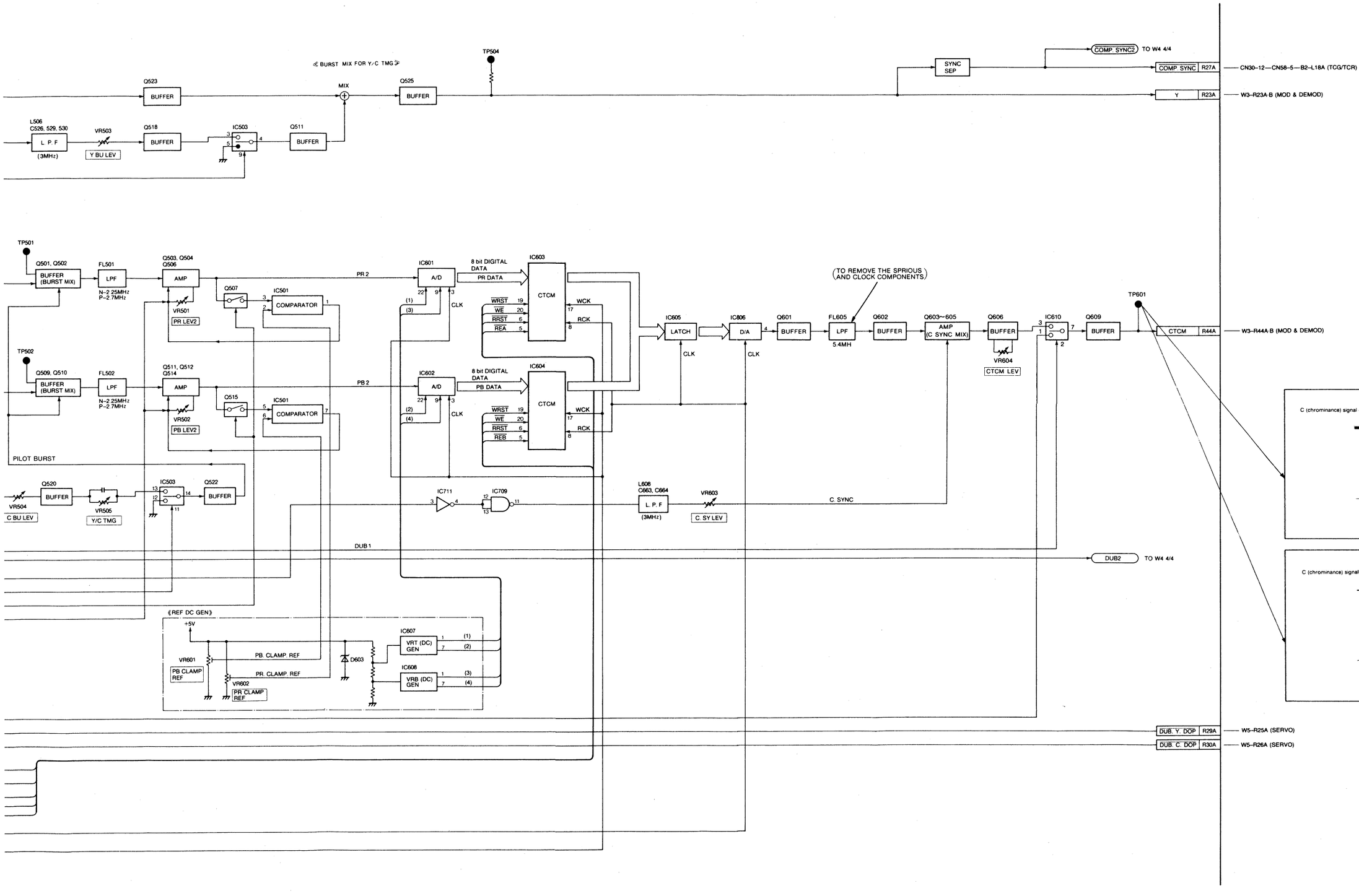

W4 (DEC & CTCM) BLOCK DIAGRAM 3/4 (CTCM SECTION) [FOR AU-65, AU-665 (NTSC)]

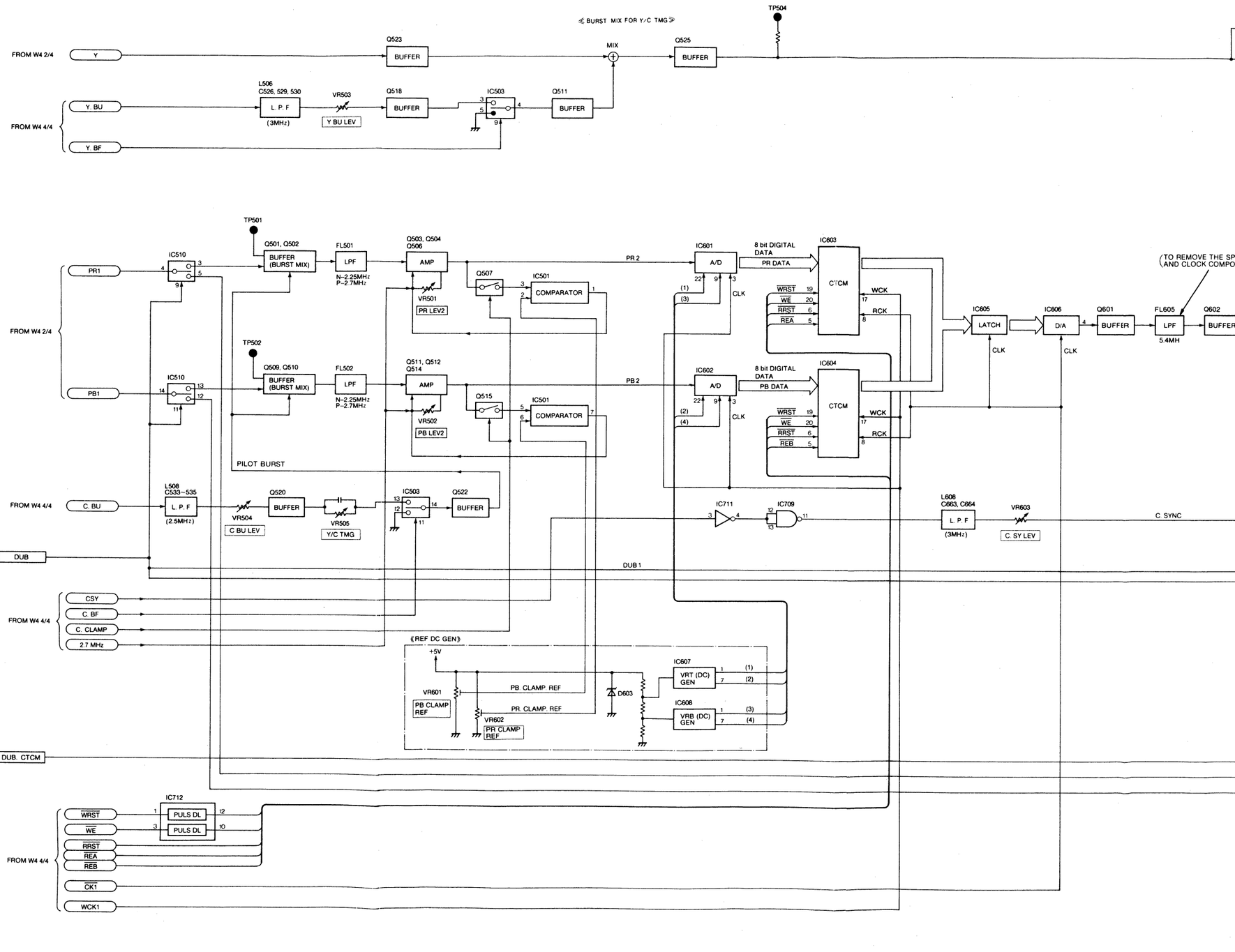

W4 (DEC & CTCM) BLOCK DIAGRAM 4/4 (CONTROL PULSE GENERATION SECTION) [FOR AU-65, AU-665

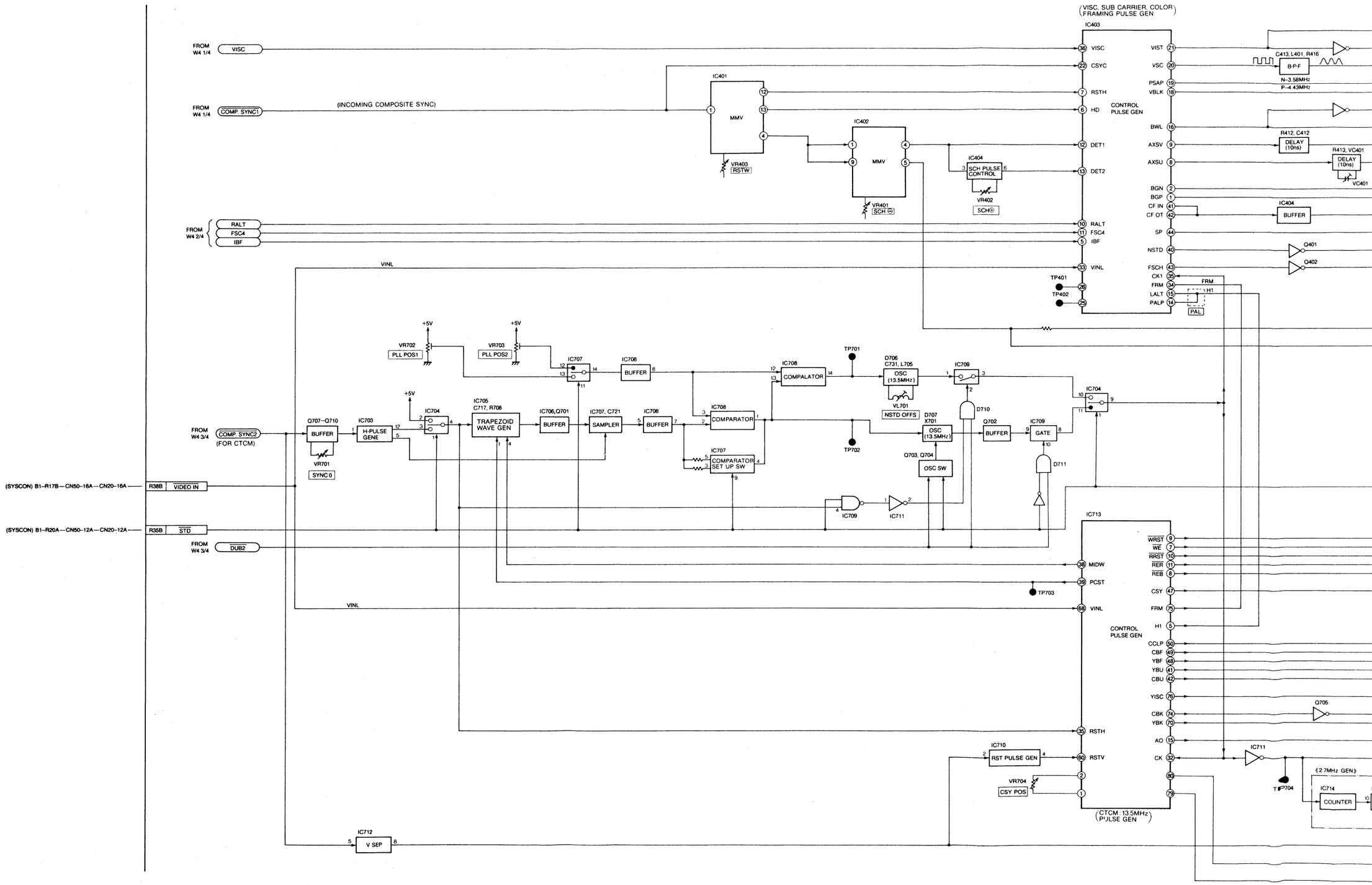

IAGRAM 4/4 (CONTROL PULSE GENERATION SECTION) [FOR AU-65, AU-665 (NTSC)]

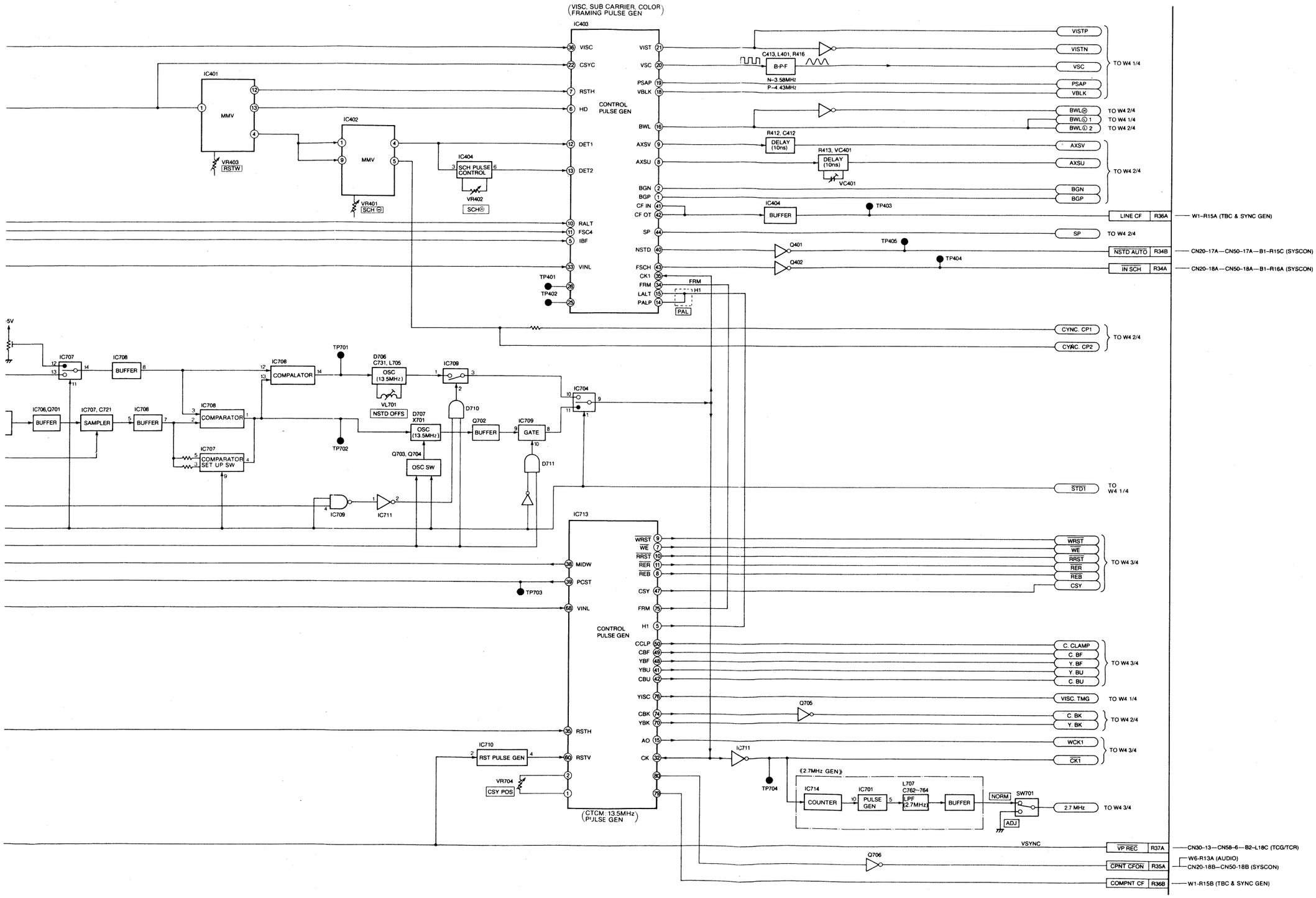

W5 (SERVO) BLOCK DIAGRAM 1/6 (CAPSTAN SERVO SECTION)

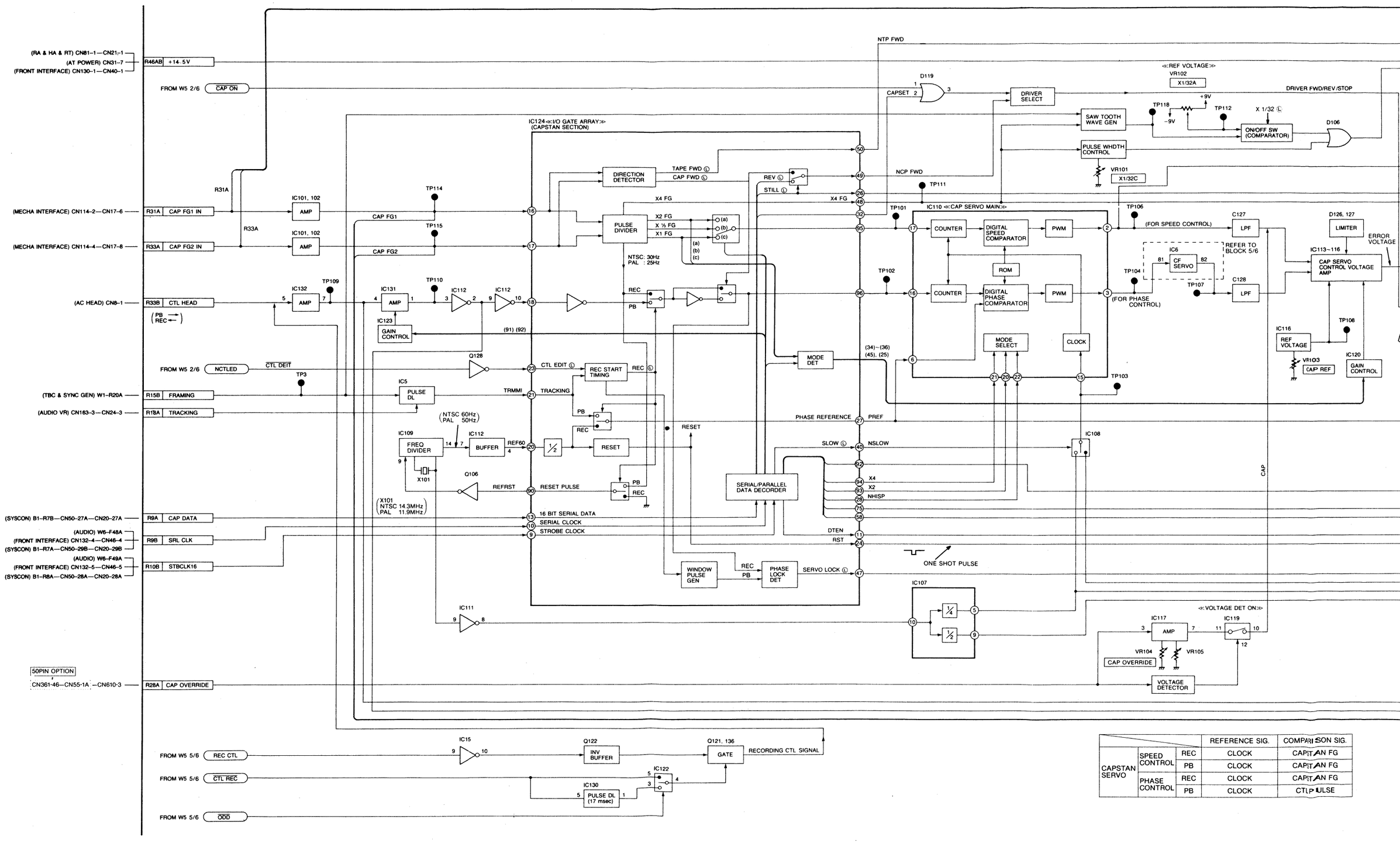

			REFERENCE SIG.	COMPARISON SIG.
CAPSTAN SERVO	SPEED CONTROL	REC	CLOCK	CAPSTAN FG
		PB	CLOCK	CAPSTAN FG
	PHASE CONTROL	REC	CLOCK	CAPSTAN FG
		PB	CLOCK	CTL PULSE

1/6 (CAPSTAN SERVO SECTION)

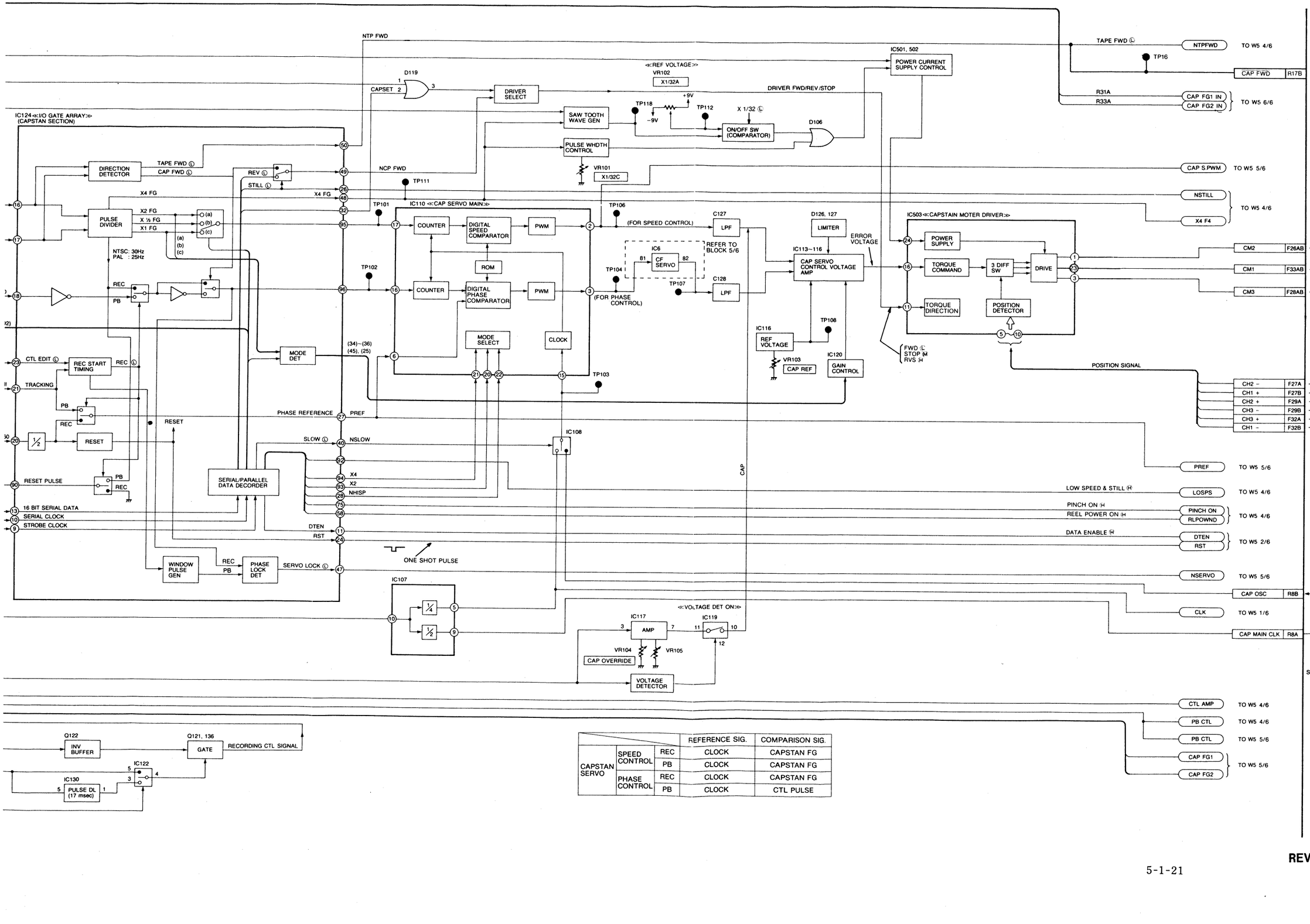

			REFERENCE SIG.	COMPARISON SIG.
CAPSTAN SERVO	SPEED CONTROL	REC	CLOCK	CAPSTAN FG
		PB	CLOCK	CAPSTAN FG
	PHASE CONTROL	REC	CLOCK	CAPSTAN FG
		PB	CLOCK	CTL PULSE

REVERSE SIDE SERVO BLOCK

W5 (SERVO) BLOCK DIAGRAM 2/6 (DRUM SERVO SECTION)

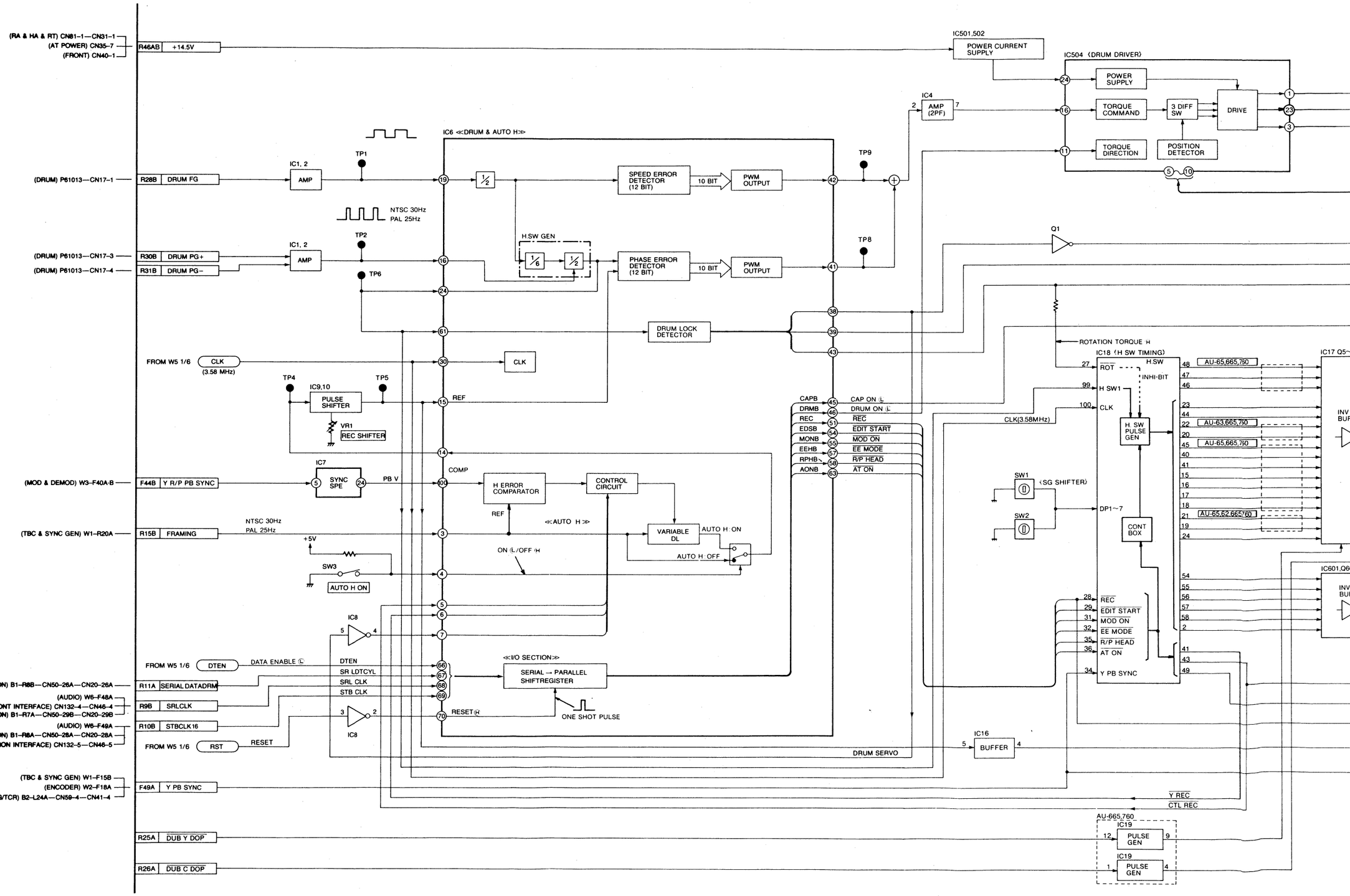

GRAM 2/6 (DRUM SERVO SECTION)

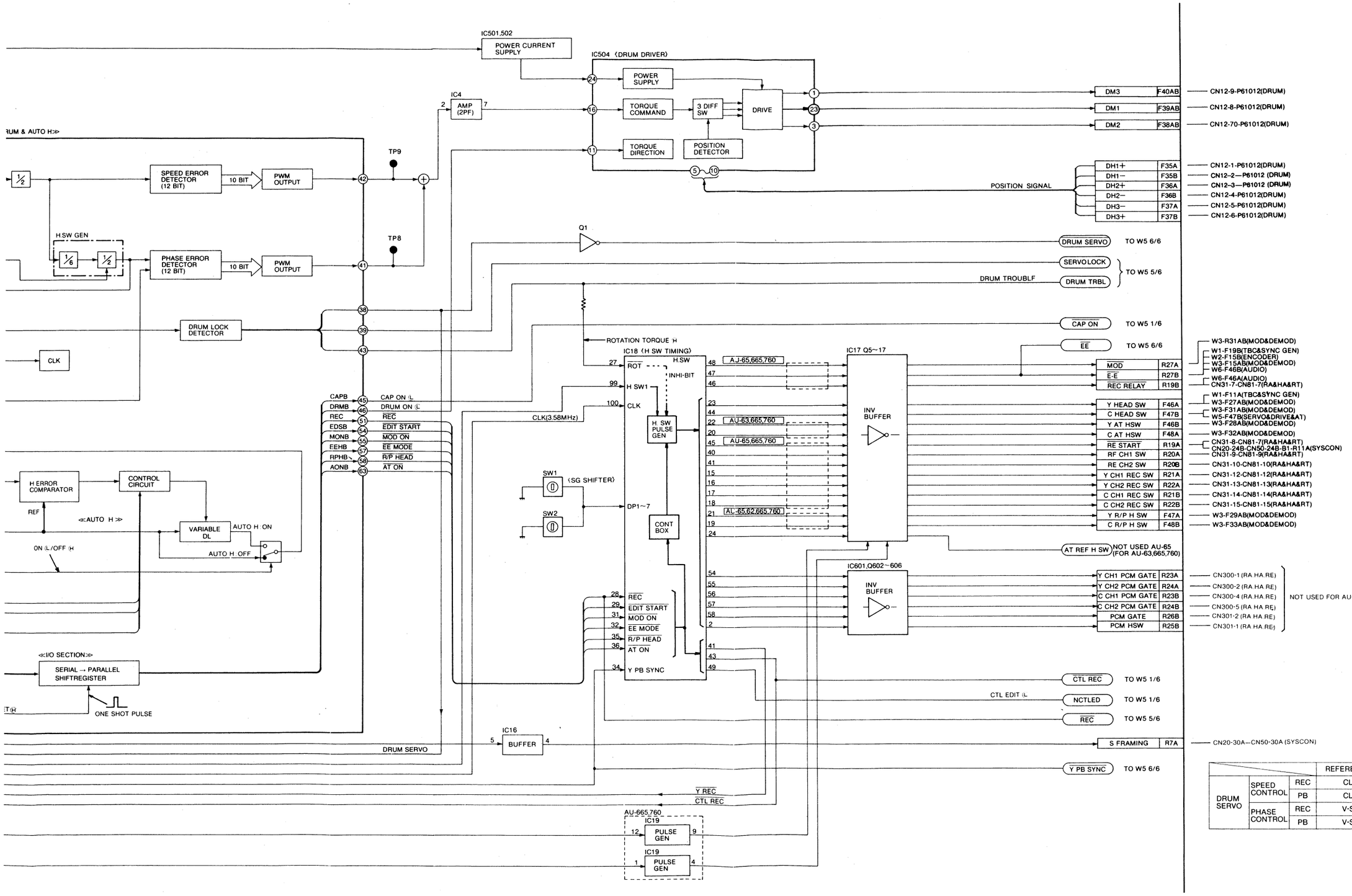

			REFERENCE SIG.	COMPARISON SIG.
DRUM SERVO	SPEED CONTROL	REC	CLOCK	DRUM FG
		PB	CLOCK	DRUM FG
	PHASE CONTROL	REC	V-SYNC	H. SW
		PB	V-SYNC	H. SW

W5 (SERVO) BLOCK DIAGRAM 3/6 (REEL SERVO SECTION)

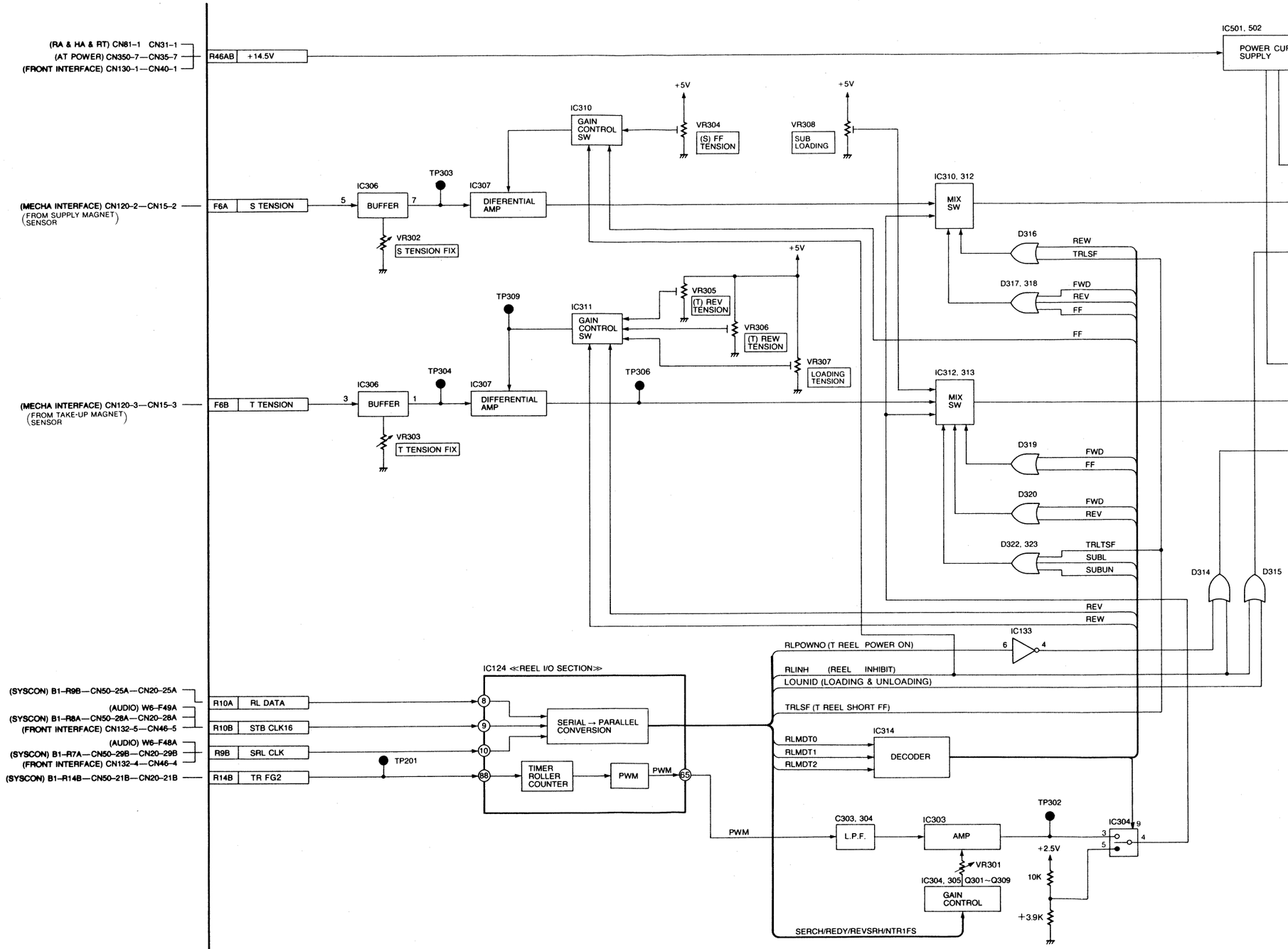

REEL CONTROL TABLE

MODE		
		SUPP
SHUTTLE	REV SEARCH	SPEED CONT
	REV	TENSI CONT
	STILL	
	FWD	
	FWD SEARCH	
STOP		
PLAY		
LOADING		MECHA BRAKE
UNLOADING		MECHA BRAKE

K DIAGRAM 3/6 (REEL SERVO SECTION)

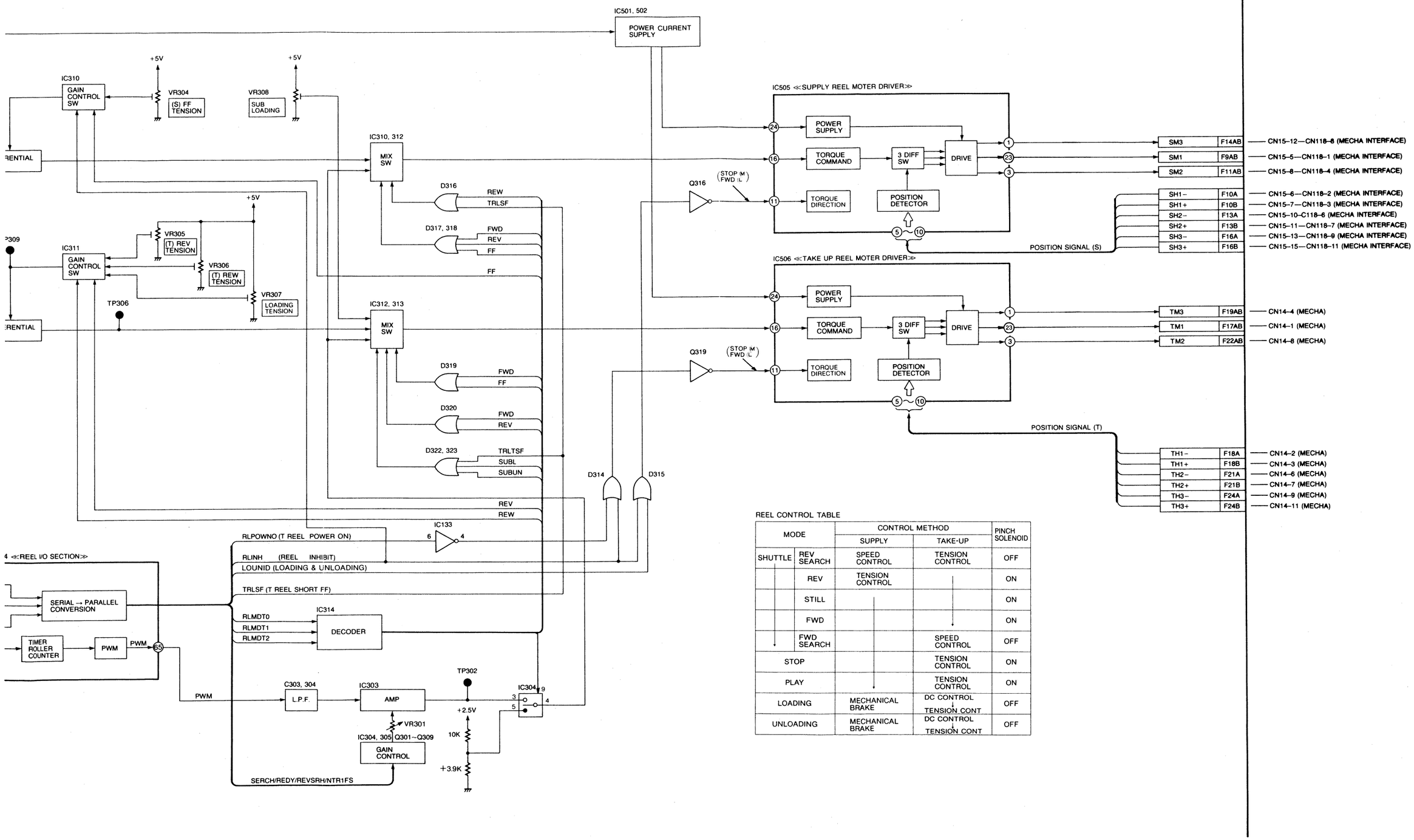

REEL CONTROL TABLE

MODE		CONTROL METHOD		PINCH SOLENOID
		SUPPLY	TAKE-UP	
SHUTTLE	REV SEARCH	SPEED CONTROL	TENSION CONTROL	OFF
↓	REV	TENSION CONTROL	↓	ON
↓	STILL	↓	↓	ON
↓	FWD	↓	↓	ON
↓	FWD SEARCH	↓	SPEED CONTROL	OFF
STOP		↓	TENSION CONTROL	ON
PLAY		↓	TENSION CONTROL	ON
LOADING		MECHANICAL BRAKE	DC CONTROL ↓ TENSION CONT	OFF
UNLOADING		MECHANICAL BRAKE	DC CONTROL ↓ TENSION CONT	OFF

REVERSE SIDE

W5 (SERVO) BLOCK DIAGRAM 4/6 (CTL RECOVER SECTION)

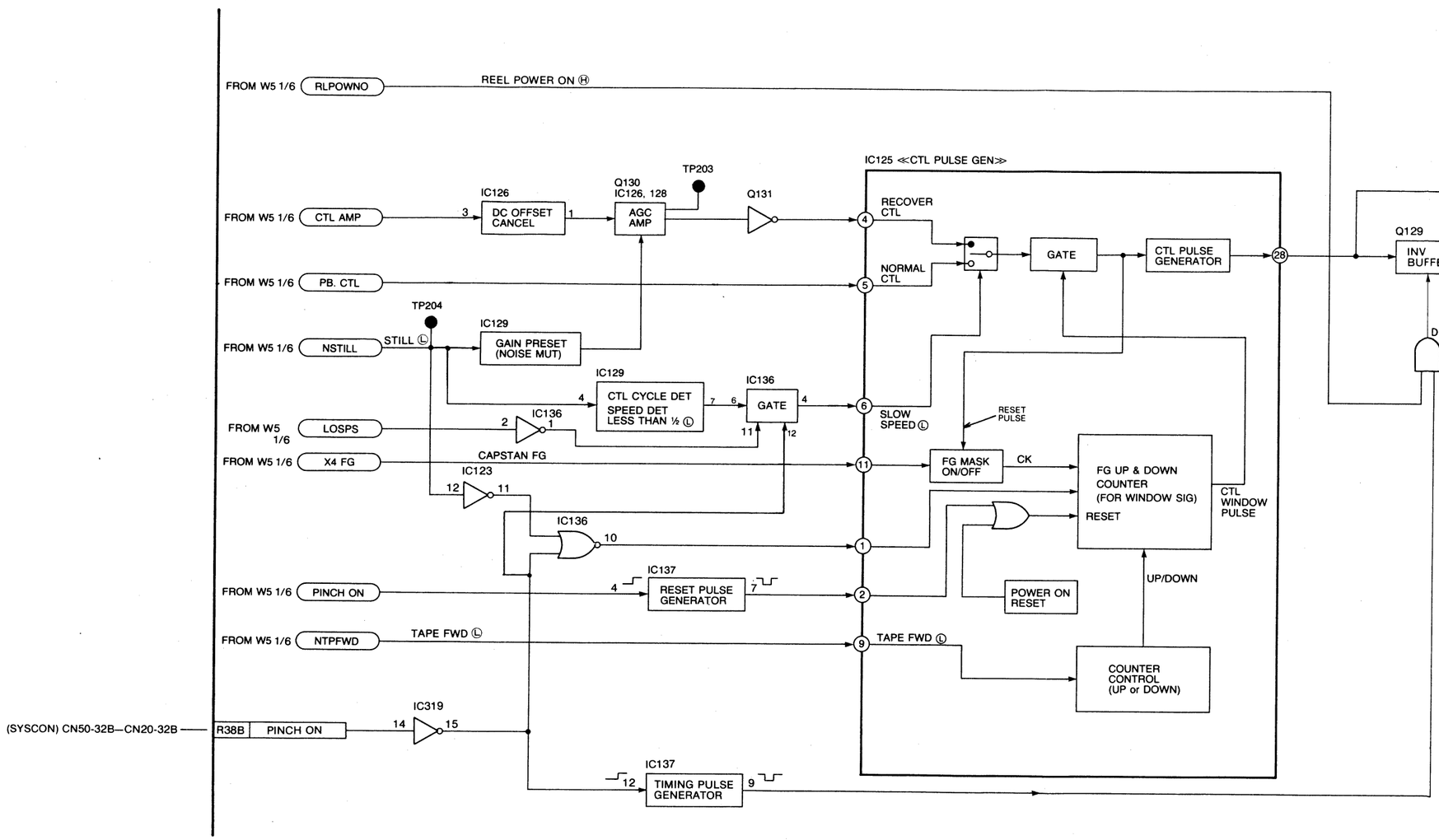

/O) BLOCK DIAGRAM 4/6 (CTL RECOVER SECTION)

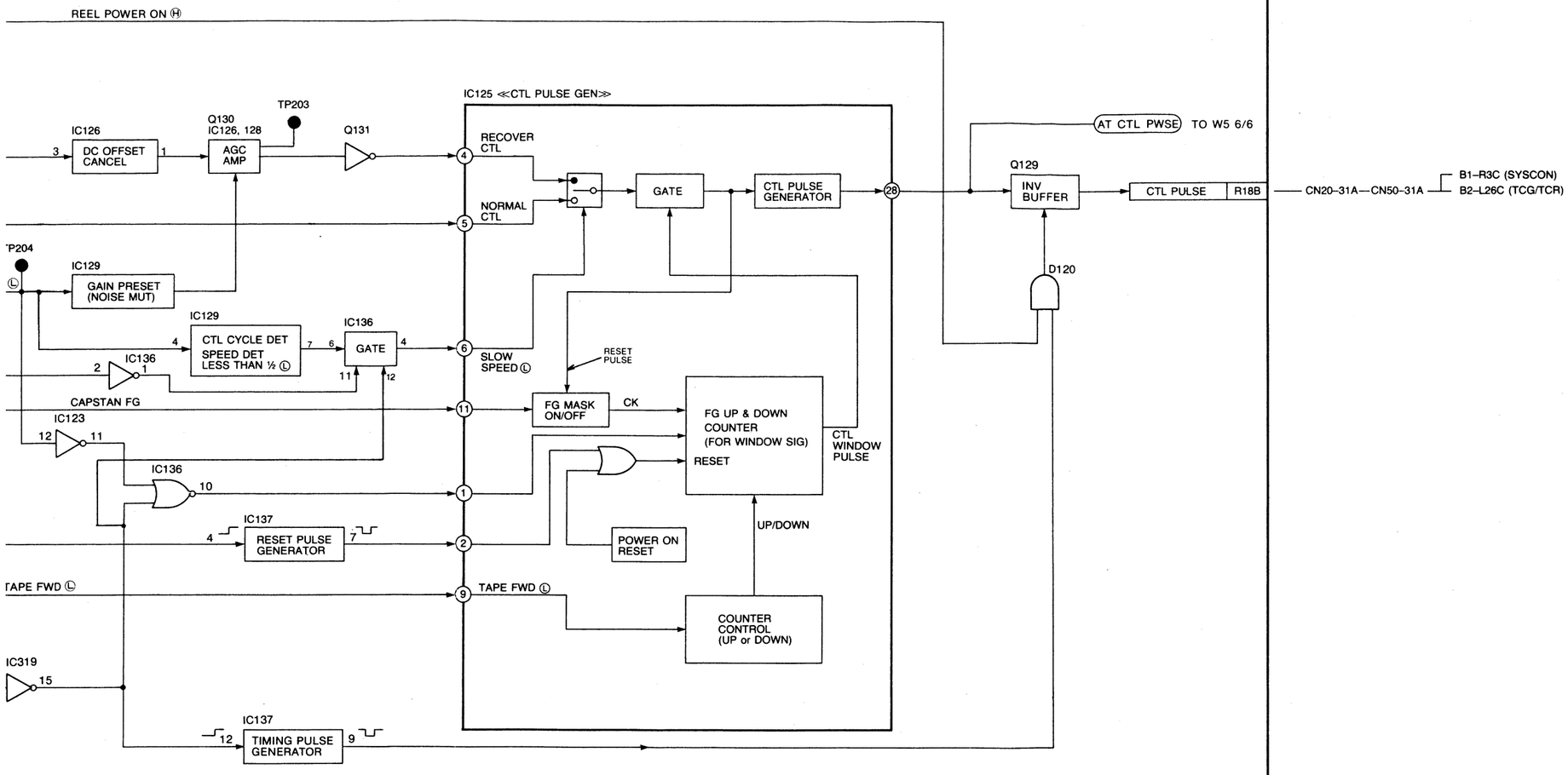

W5 (SERVO) BLOCK DIAGRAM 5/6 (CF SERVO SECTION)

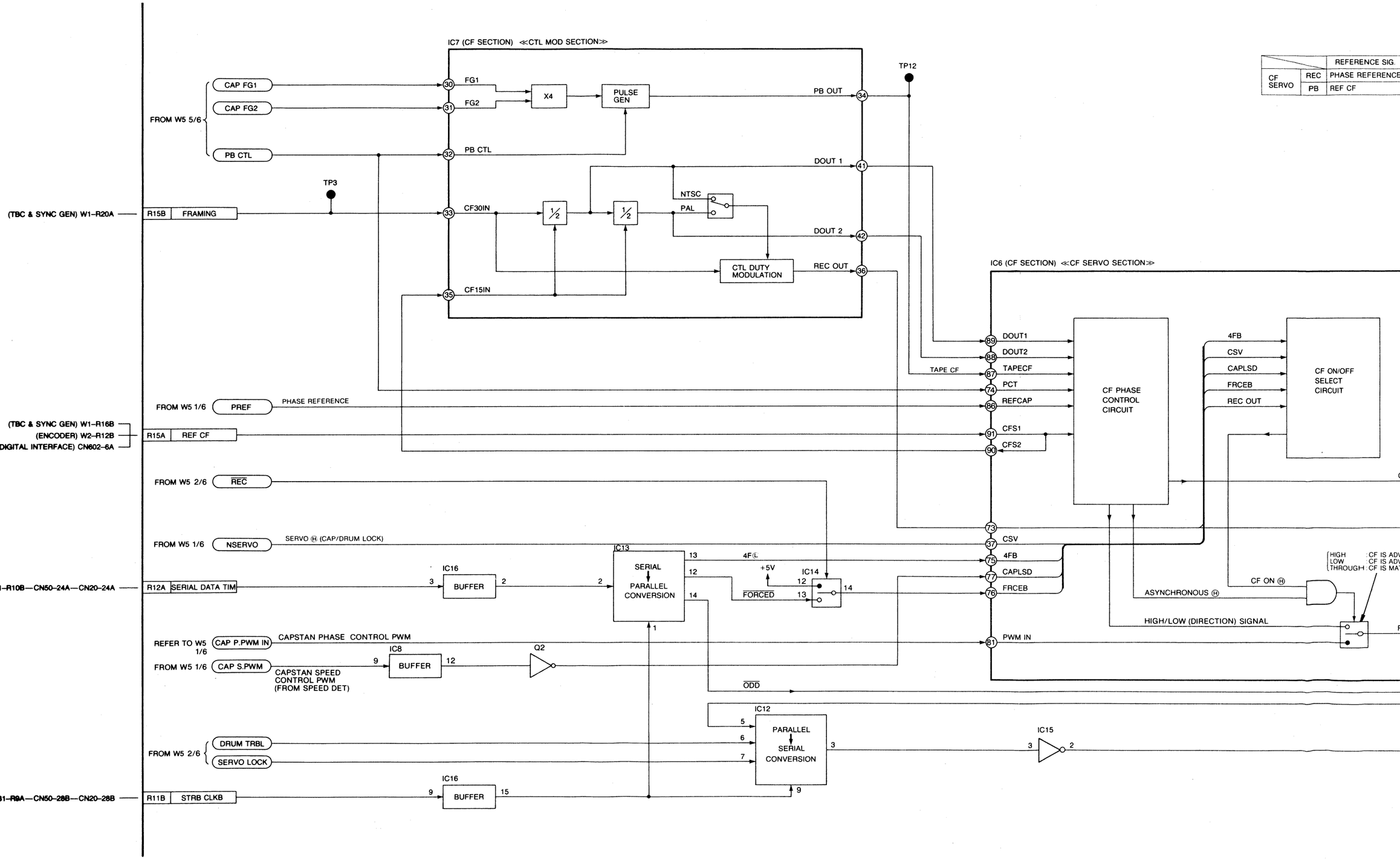

AGRAM 5/6 (CF SERVO SECTION)

		REFERENCE SIG.	COMPARISON SIG.
CF SERVO	REC	PHASE REFERENCE	REF CF
	PB	REF CF	TAPE CF

C7 (CF SECTION) ≪CTL MOD SECTION≫

FG1
FG2
X4
PULSE GEN
PB OUT (34)
TP12
PB CTL
DOUT 1 (41)
CF30IN
1/2
1/2
NTSC
PAL
DOUT 2 (42)
CTL DUTY MODULATION
REC OUT (36)
CF15IN

IC6 (CF SECTION) ≪CF SERVO SECTION≫

DOUT1 (89)
DOUT2 (88)
TAPE CF
TAPECF (87)
PCT (74)
REFCAP (86)
CF PHASE CONTROL CIRCUIT
CFS1 (91)
CFS2 (90)
4FB
CSV
CAPLSD
FRCEB
REC OUT
CF ON/OFF SELECT CIRCUIT
CF LOCK Ⓗ (78)
(73)
CSV (37)
4FB (75)
CAPLSD (77)
FRCEB (76)
(72)
REC CTL — TO W5 1/6

IC13
16
BUFFER
2
2
SERIAL
PARALLEL
CONVERSION
13
12
14
1
4F Ⓛ
+5V
FORCED
IC14
12
13
14
HIGH : CF IS ADVANCED
LOW : CF IS ADVANCED
THROUGH : CF IS MATCHED
CF ON Ⓗ
ASYNCHRONOUS Ⓗ
HIGH/LOW (DIRECTION) SIGNAL
PWM IN (81)
PWM OUT (82)
CAP P. PWM OUT — REFER TO W5 1/6
Q2
2
ODD
ODD — TO W5 2/6
IC12
5
6
7
PARALLEL
SERIAL
CONVERSION
3
9
IC15
3
2
16
BUFFER
15
SERIAL DATA SRV | R12B — CN20-27B—CN50-17B—B1-R7C (SYSCON)

REVERSE SIDE SERVO BLOCK

W5 (SERVO) BLOCK DIAGRAM 6/6 (AT SECTION)[FOR AU-665,AU-63]

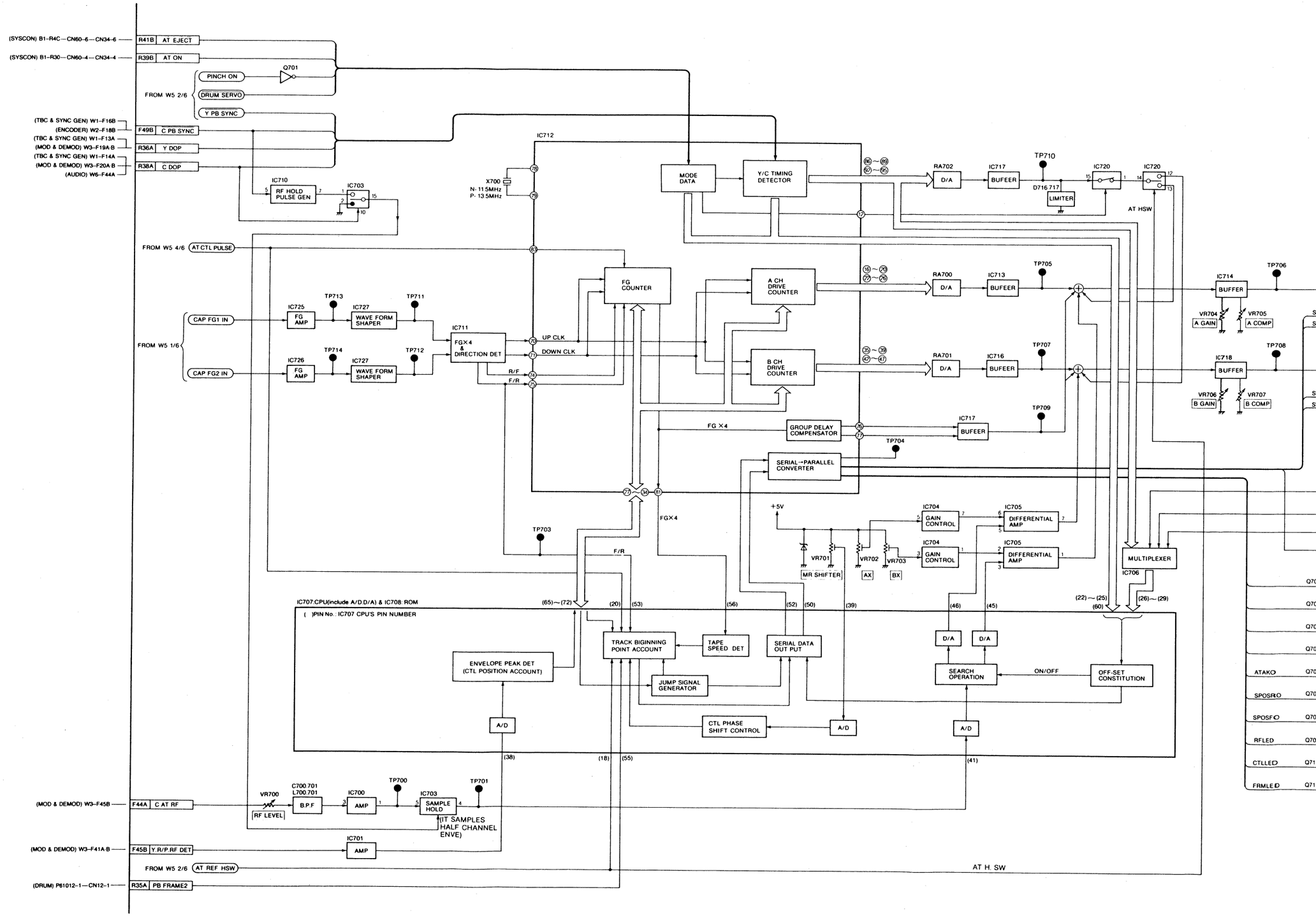

DIAGRAM 6/6 (AT SECTION)[FOR AU-665,AU-63]

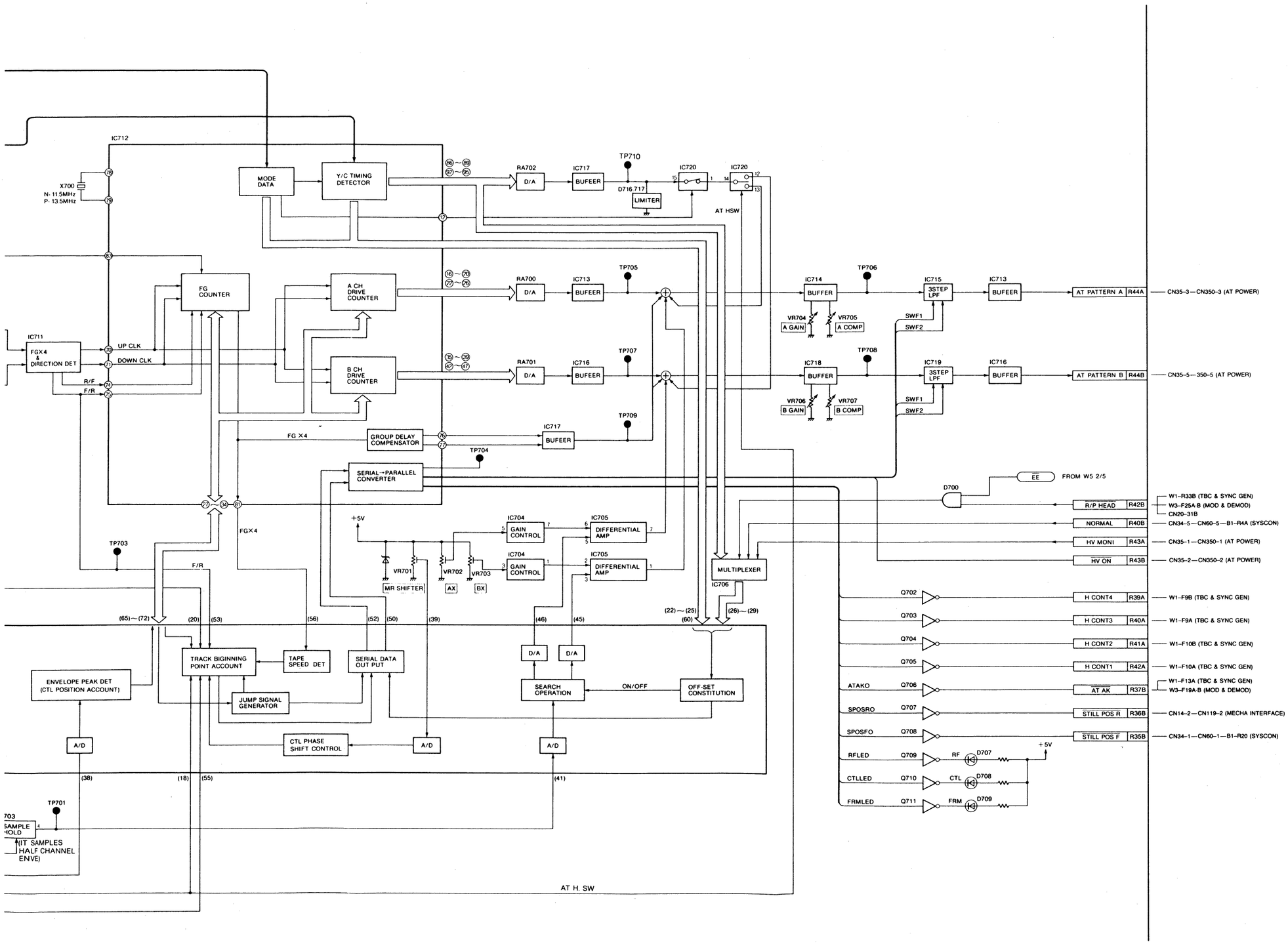

W6 (AUDIO) BLOCK DIAGRAM 1/4 (LINEAR AUDIO SECTION)

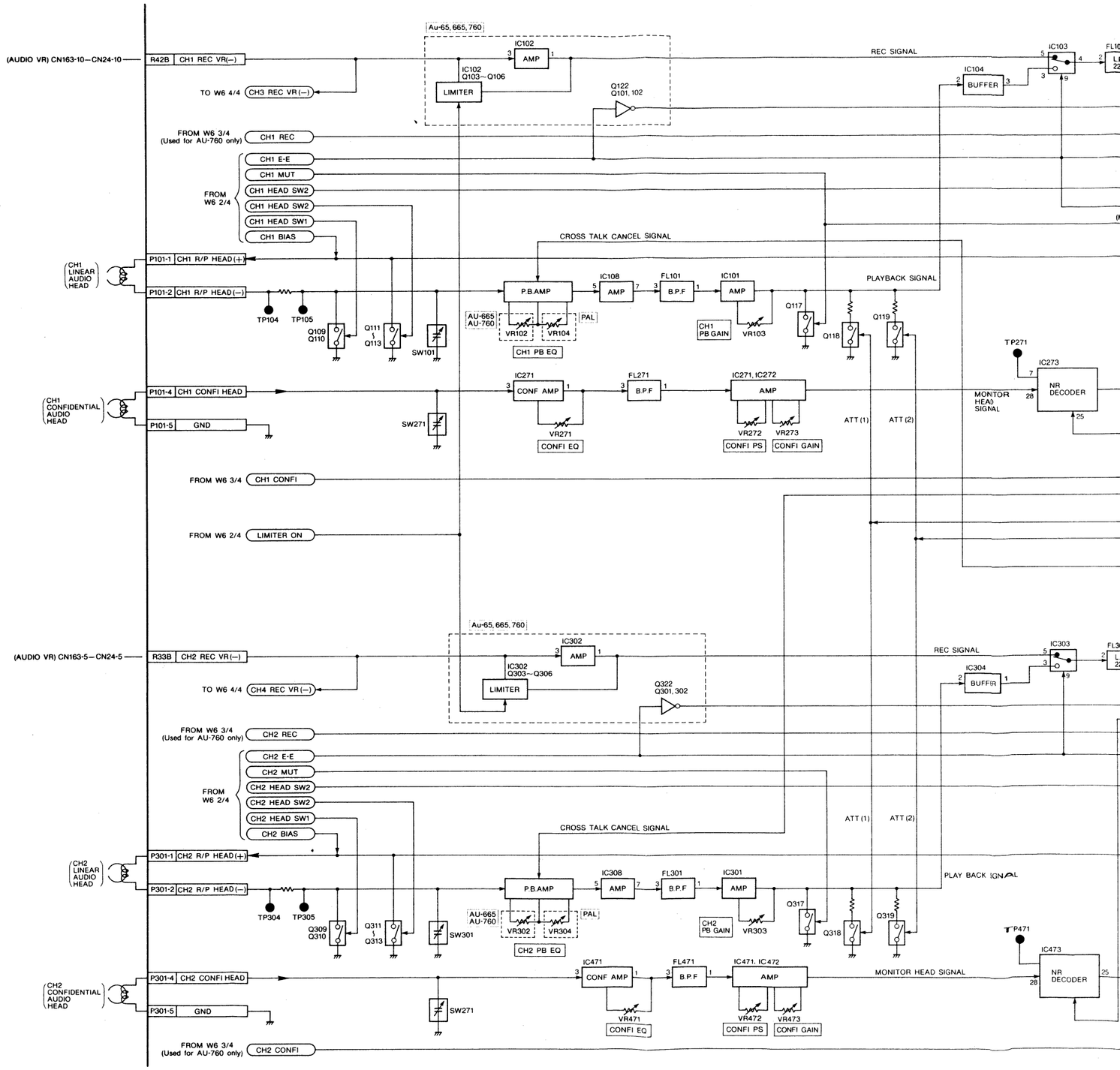

:CTION)

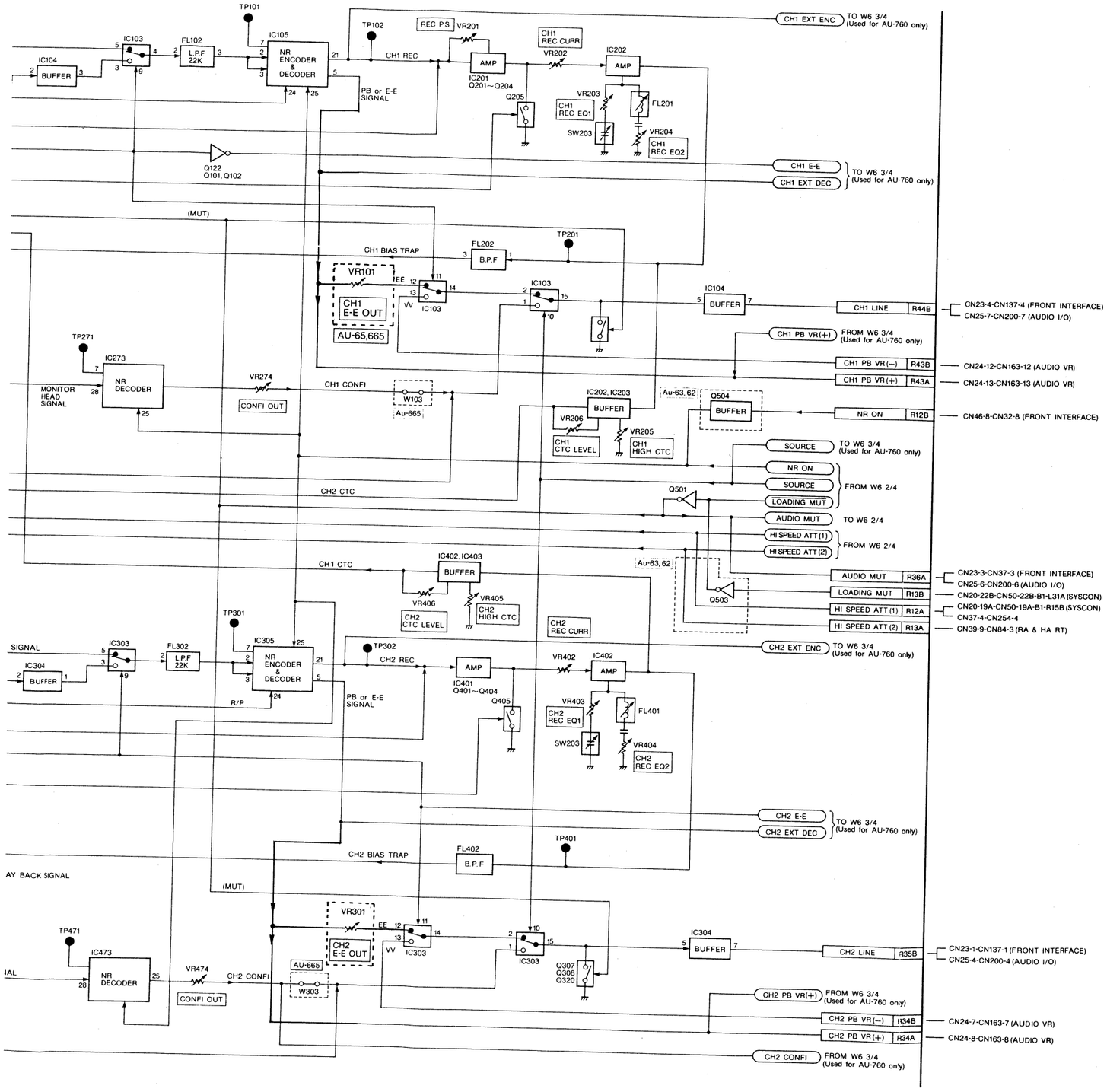
TP101
IC103
FL102
IC105
TP102
REC P.S
VR201
CH1 REC CURR
IC104
BUFFER
L.P.F 22K
NR ENCODER & DECODER
CH1 REC
AMP
VR202
IC202
IC201 Q201~Q204
Q205
VR203
CH1 REC EQ1
FL201
SW203
VR204
CH1 REC EQ2
PB or E-E SIGNAL
Q122 Q101, Q102
CH1 EXT ENC
TO W6 3/4 (Used for AU-760 only)
CH1 E-E
CH1 EXT DEC
(MUT)
CH1 BIAS TRAP
FL202
B.P.F
TP201
VR101
CH1 E-E OUT
AU-65,665
IC103
IC104
BUFFER
CH1 LINE
R44B
CN23-4-CN137-4 (FRONT INTERFACE)
CN25-7-CN200-7 (AUDIO I/O)
CH1 PB VR(+)
FROM W6 3/4 (Used for AU-760 only)
CH1 PB VR(–)
R43B
CN24-12-CN163-12 (AUDIO VR)
CH1 PB VR(+)
R43A
CN24-13-CN163-13 (AUDIO VR)
TP271
IC273
NR DECODER
MONITOR HEAD SIGNAL
VR274
CONFI OUT
CH1 CONFI
W103
Au-665
IC202, IC203
BUFFER
Au-63, 62
Q504
NR ON
R12B
CN46-8-CN32-8 (FRONT INTERFACE)
VR206
CH1 CTC LEVEL
VR205
CH1 HIGH CTC
SOURCE
TO W6 3/4 (Used for AU-760 only)
NR ON
SOURCE
LOADING MUT
FROM W6 2/4
CH2 CTC
Q501
AUDIO MUT
TO W6 2/4
HI SPEED ATT (1)
HI SPEED ATT (2)
FROM W6 2/4
CH1 CTC
IC402, IC403
BUFFER
VR406
CH2 CTC LEVEL
VR405
CH2 HIGH CTC
Au-63, 62
Q503
AUDIO MUT
R36A
CN23-3-CN37-3 (FRONT INTERFACE)
CN25-6-CN200-6 (AUDIO I/O)
LOADING MUT
R13B
CN20-22B-CN50-22B-B1-L31A (SYSCON)
HI SPEED ATT (1)
R12A
CN20-19A-CN50-19A-B1-R15B (SYSCON)
CN37-4-CN254-4
HI SPEED ATT (2)
R13A
CN39-9-CN84-3 (RA & HA RT)
SIGNAL
IC303
IC304
BUFFER
FL302
L.P.F 22K
TP301
IC305
NR ENCODER & DECODER
TP302
CH2 REC
AMP
IC401 Q401~Q404
Q405
VR402
IC402
AMP
VR403
CH2 REC EQ1
FL401
SW203
VR404
CH2 REC EQ2
CH2 REC CURR
R/P
PB or E-E SIGNAL
CH2 EXT ENC
TO W6 3/4 (Used for AU-760 only)
CH2 E-E
CH2 EXT DEC
TO W6 3/4 (Used for AU-760 only)
CH2 BIAS TRAP
FL402
B.P.F
TP401
AY BACK SIGNAL
(MUT)
VR301
CH2 E-E OUT
IC303
IC303
Q307 Q308 Q320
TP471
IC473
NR DECODER
IAL
VR474
CONFI OUT
CH2 CONFI
AU-665
W303
IC304
BUFFER
CH2 LINE
R35B
CN23-1-CN137-1 (FRONT INTERFACE)
CN25-4-CN200-4 (AUDIO I/O)
CH2 PB VR(+)
FROM W6 3/4 (Used for AU-760 only)
CH2 PB VR(–)
R34B
CN24-7-CN163-7 (AUDIO VR)
CH2 PB VR(+)
R34A
CN24-8-CN163-8 (AUDIO VR)
CH2 CONFI
FROM W6 3/4 (Used for AU-760 only)

W6 (AUDIO) BLOCK DIAGRAM 2/4 (REC BIAS & TC SECTION)

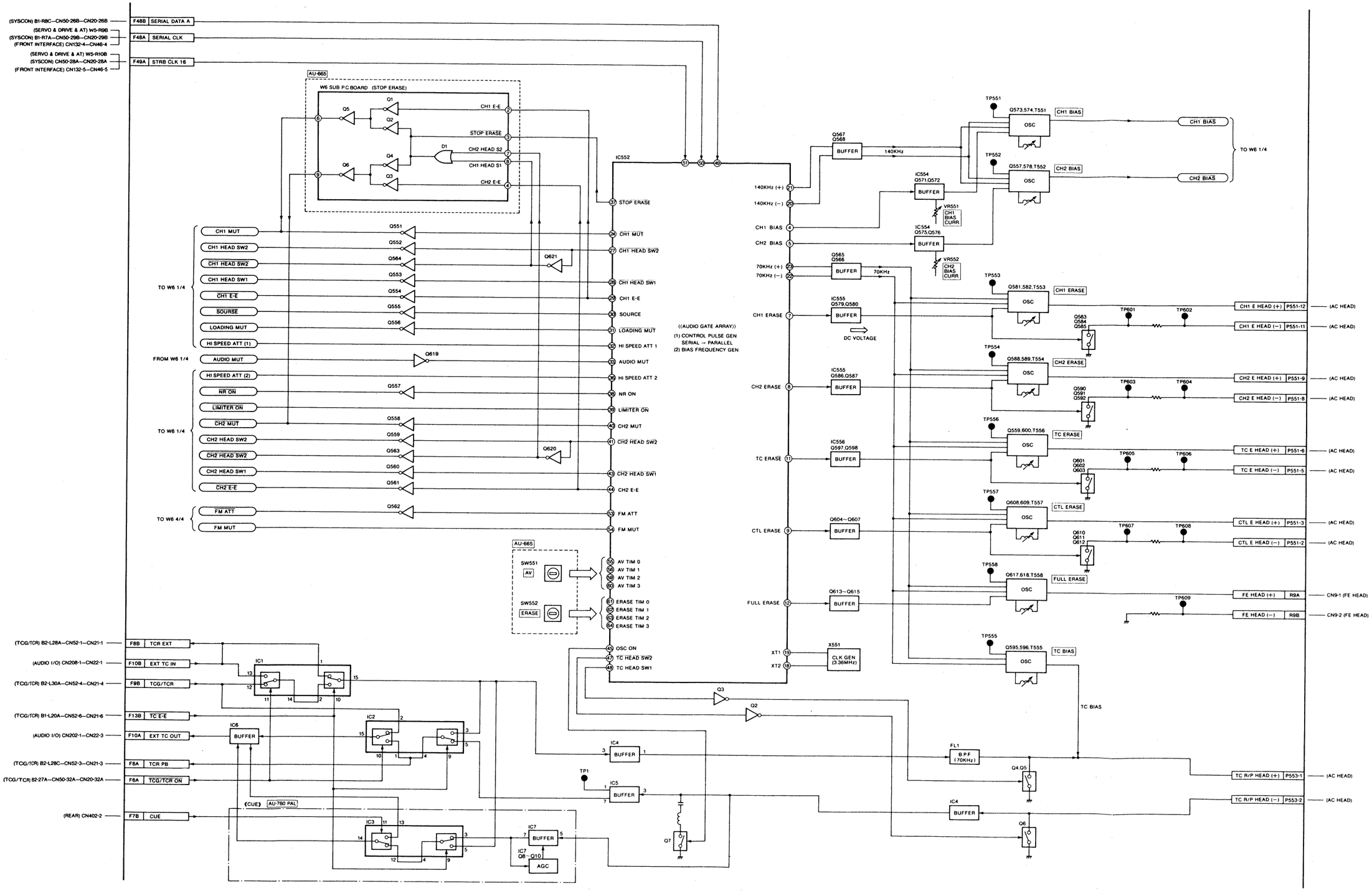

REVERSE SIDE **AUDIO BLOCK DIAGRAM**

W6 (AUDIO) BLOCK DIAGRAM 3/4 (EXT NR SECTION)[FOR AU-760]

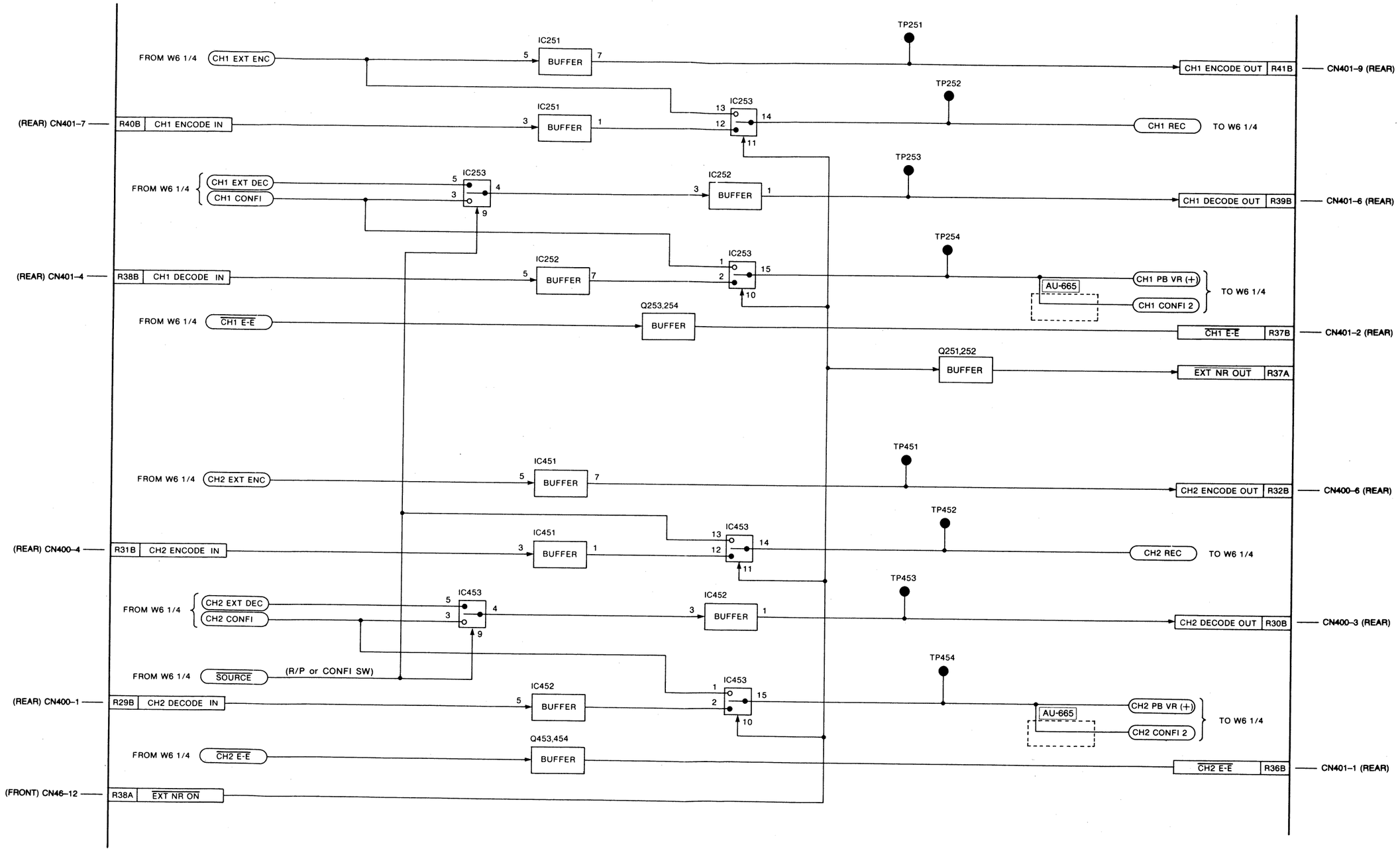

W6 (AUDIO) BLOCK DIAGRAM 4/4 (FM AUDIO SECTION)

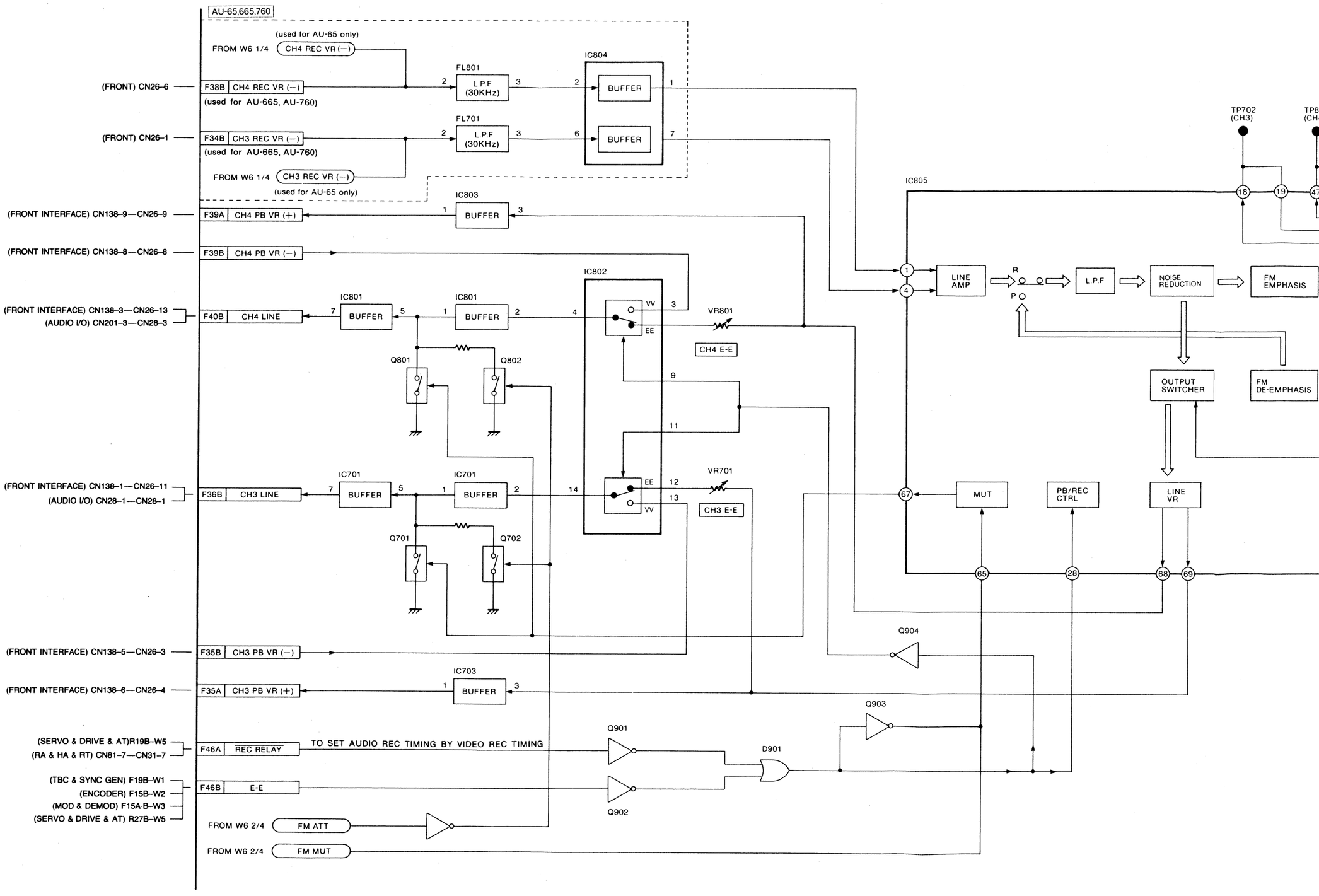

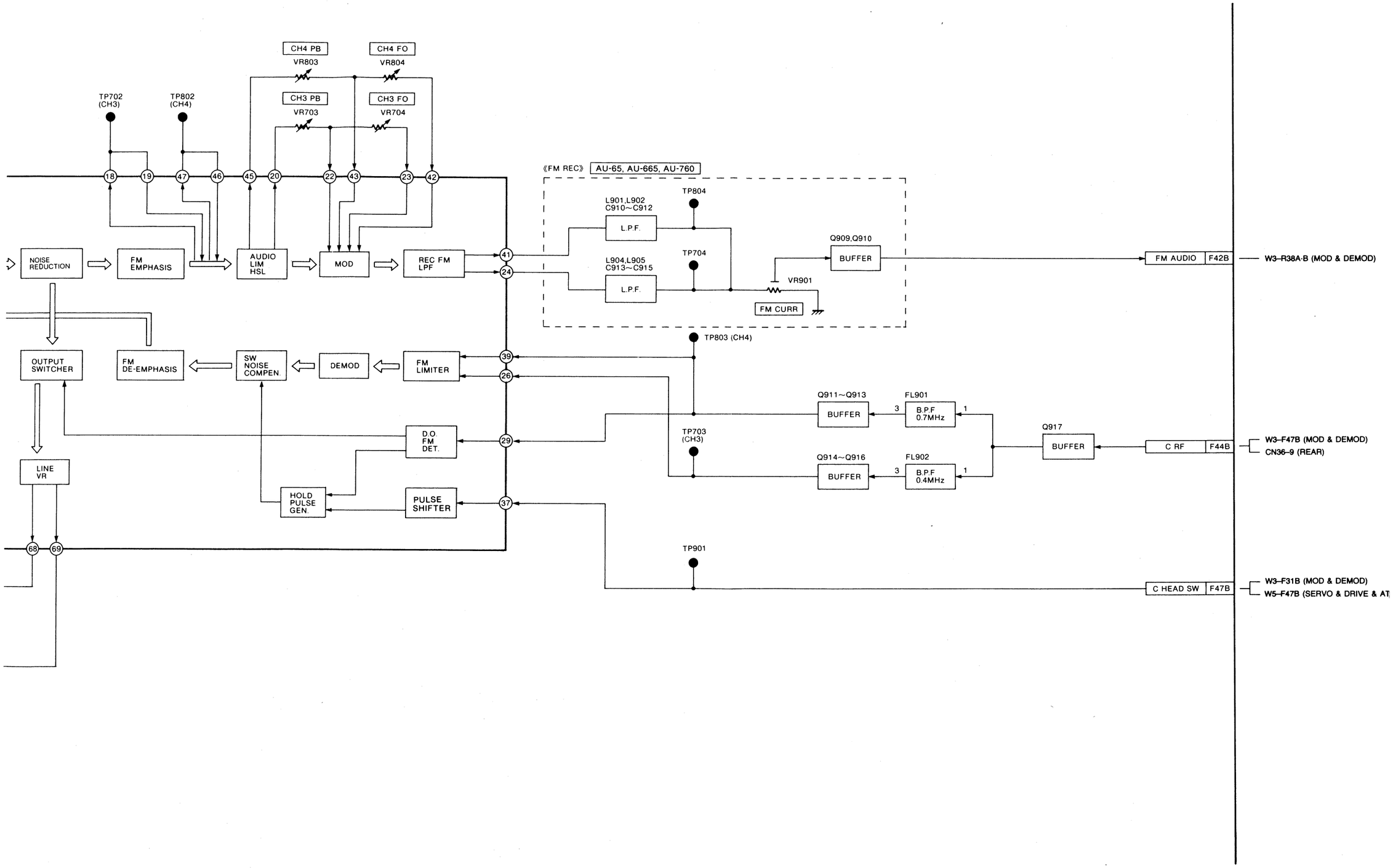
CH4 PB
VR803
CH4 FO
VR804
CH3 PB
VR703
CH3 FO
VR704
TP702 (CH3)
TP802 (CH4)
18
19
47
46
45
20
22
43
23
42
NOISE REDUCTION
FM EMPHASIS
AUDIO LIM HSL
MOD
REC FM LPF
41
24
《FM REC》 AU-65, AU-665, AU-760
L901,L902 C910~C912
L.P.F.
TP804
Q909,Q910
BUFFER
L904,L905 C913~C915
L.P.F.
TP704
VR901
FM CURR
FM AUDIO
F42B
W3–R38A·B (MOD & DEMOD)
OUTPUT SWITCHER
FM DE-EMPHASIS
SW NOISE COMPEN.
DEMOD
FM LIMITER
39
26
TP803 (CH4)
Q911~Q913
BUFFER
3
FL901
B.P.F 0.7MHz
1
TP703 (CH3)
Q914~Q916
BUFFER
3
FL902
B.P.F 0.4MHz
1
Q917
BUFFER
C RF
F44B
W3–F47B (MOD & DEMOD)
CN36–9 (REAR)
D.O. FM DET.
29
LINE VR
HOLD PULSE GEN.
PULSE SHIFTER
37
68
69
TP901
C HEAD SW
F47B
W3–F31B (MOD & DEMOD)
W5–F47B (SERVO & DRIVE & AT

SYSTEM CONTROL BLOCK DIAGRAM

B1 (SYSTEM CONTROL) BLOCK D

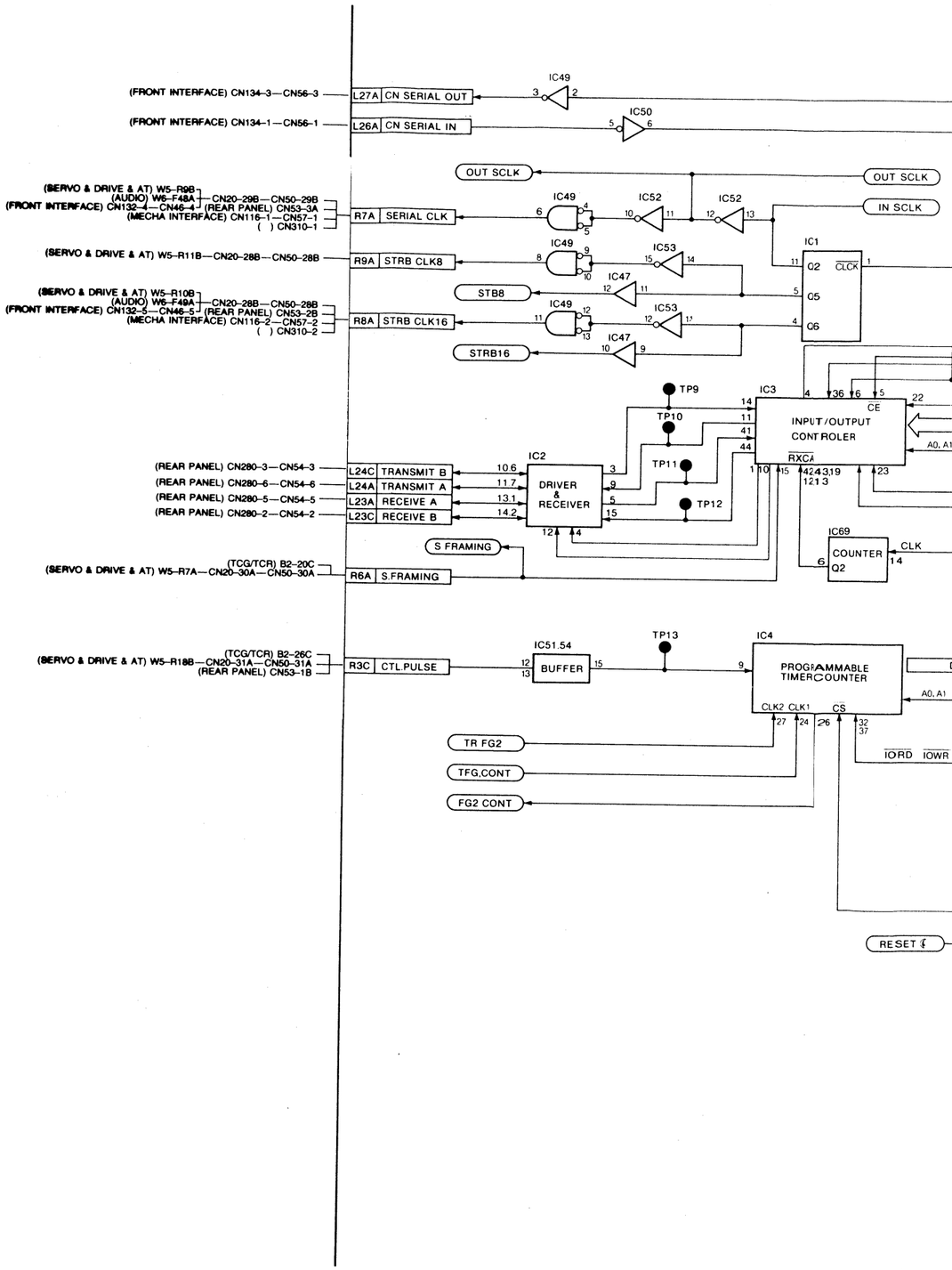

REVERSE SIDE **AUDIO BLOCK DIAGRAM**

)L) BLOCK DIAGRAM 1/3 (CPU SECTION)

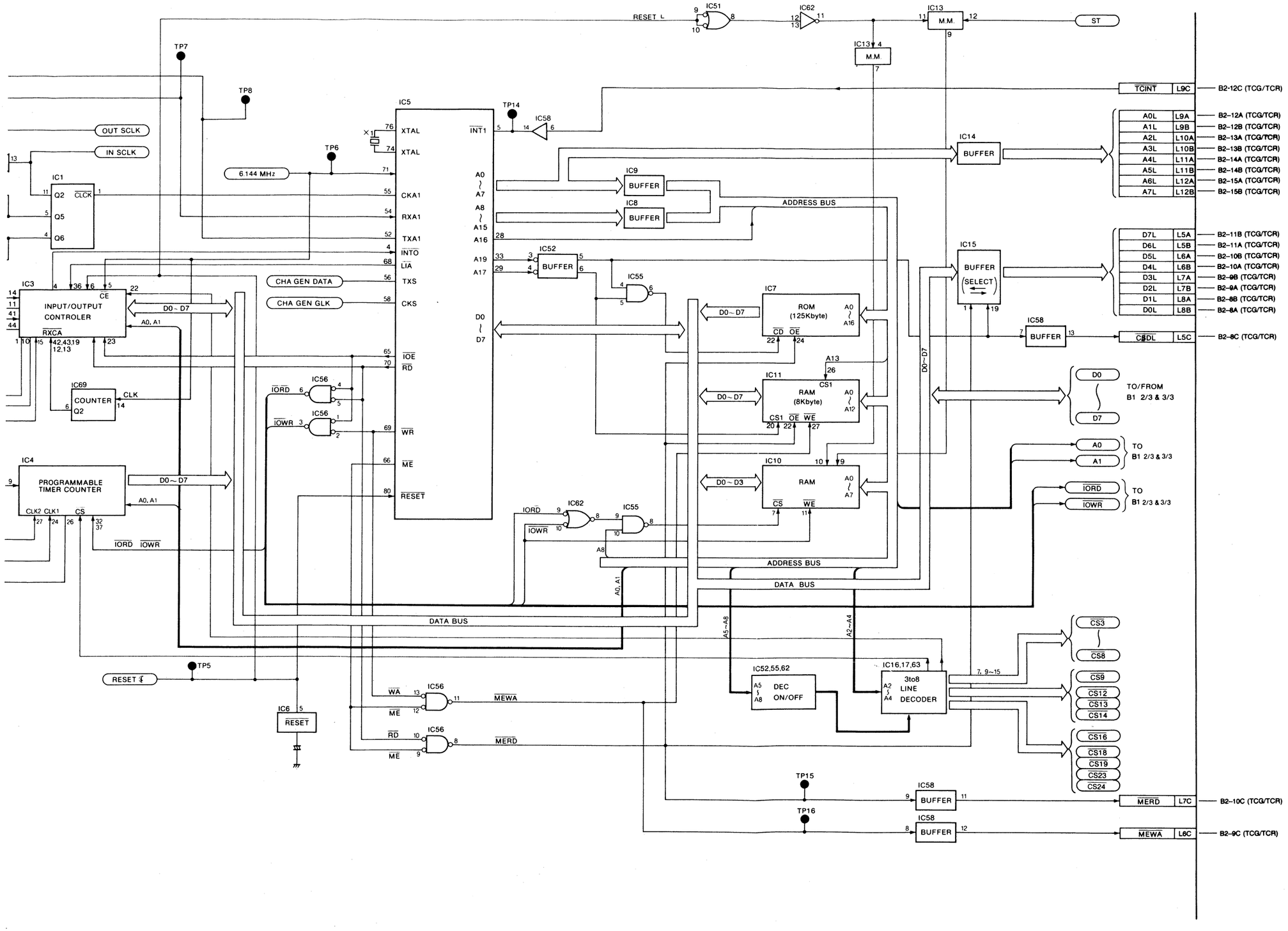

B1 (SYSTEM CONTROL) BLOCK DIAGRAM 2/3 (I/O SECTION)

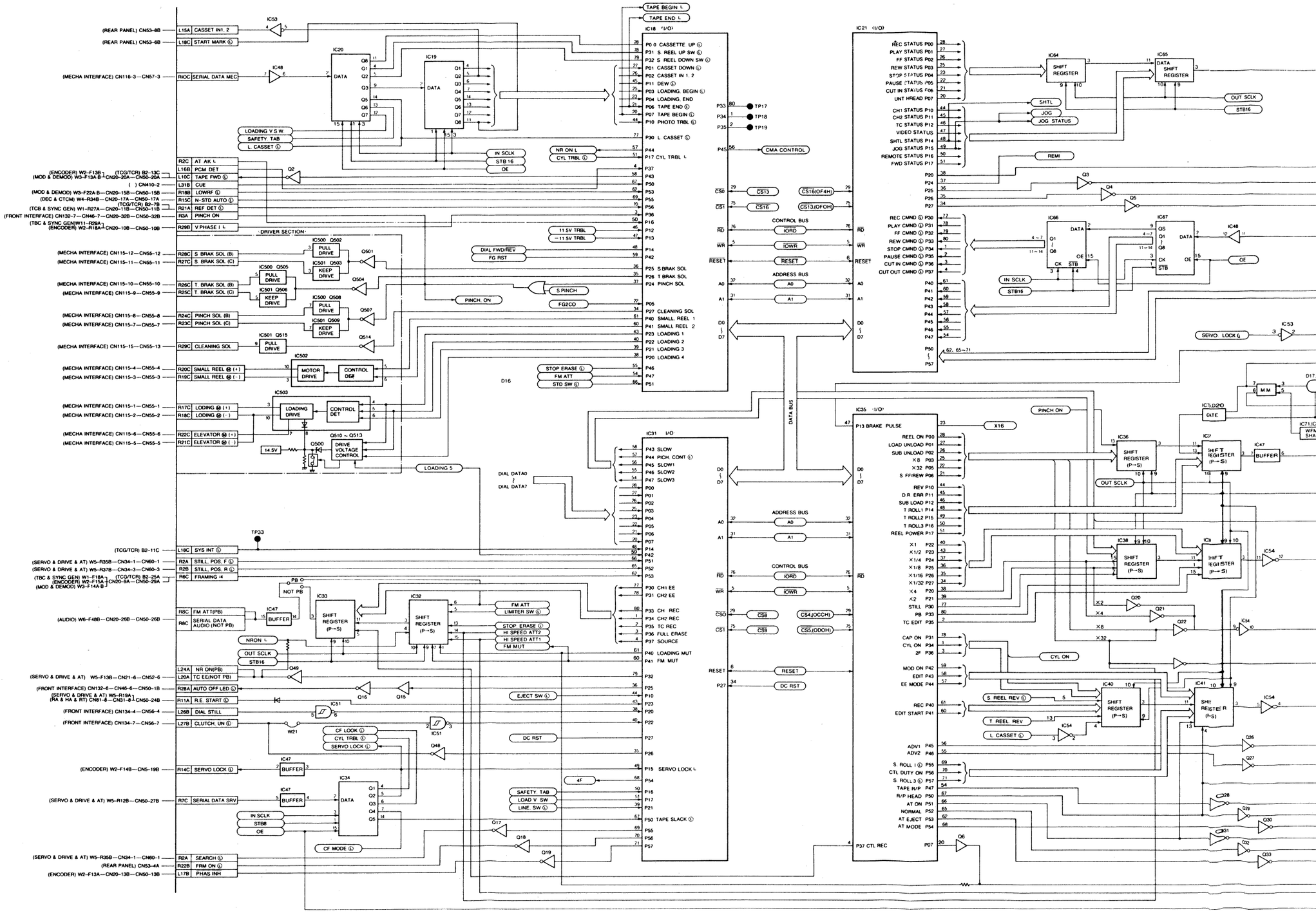

M CONTROL) BLOCK DIAGRAM 2/3 (I/O SECTION)

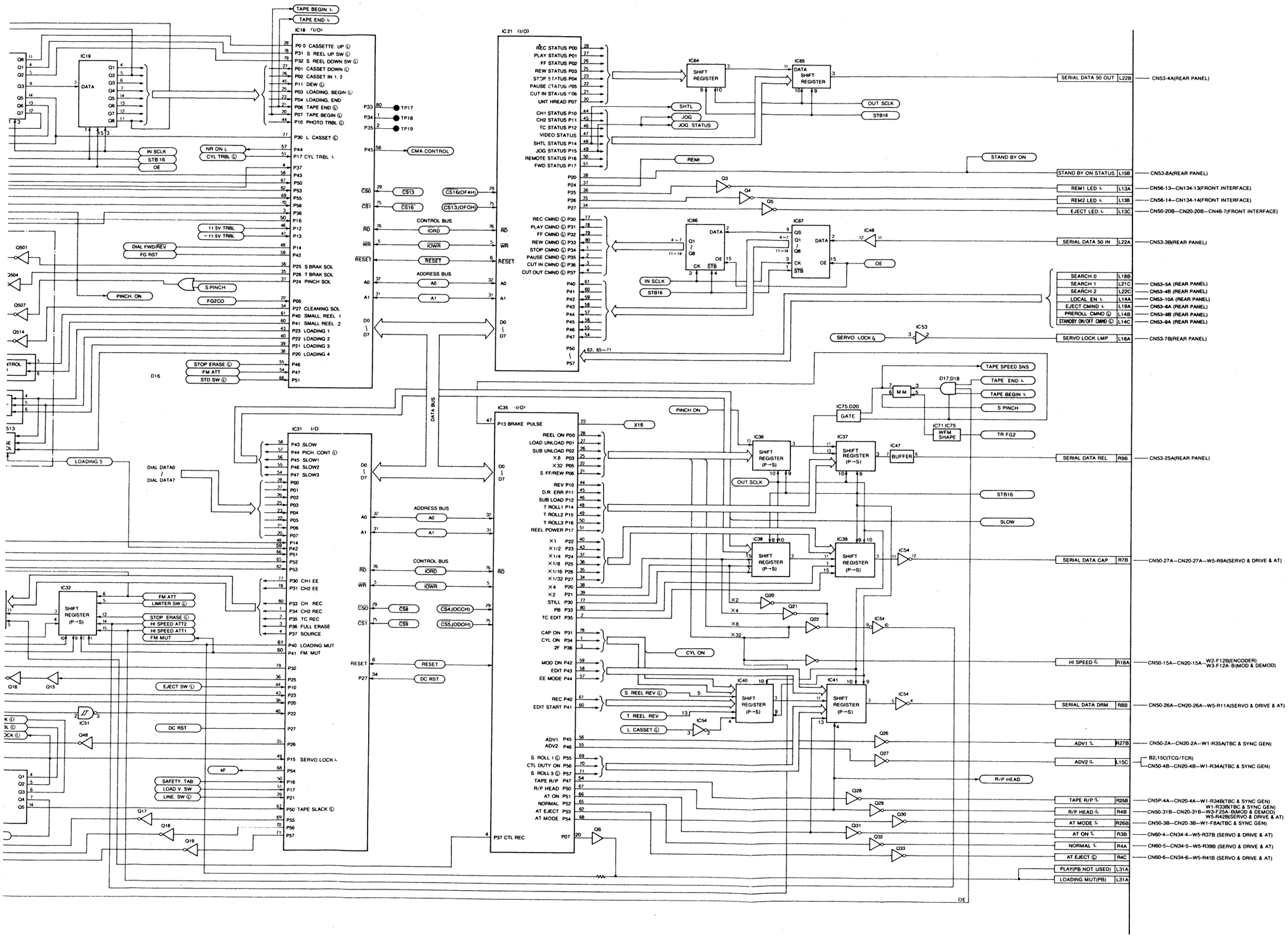

B1 (SYSTEM CONTROL) BLOCK DIAGRAM 3/3 (GATE ARRY & I/O SECTION)

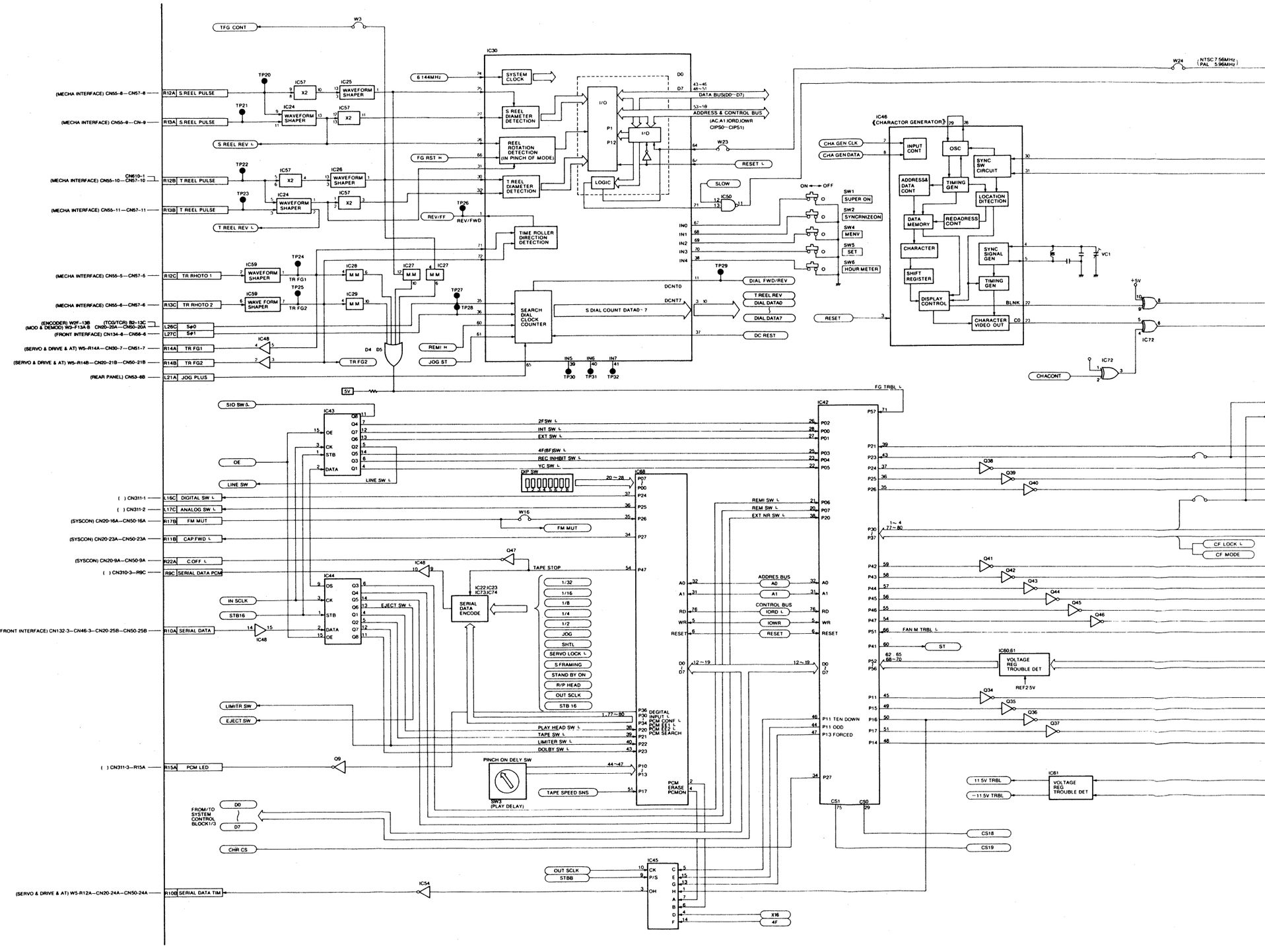

I CONTROL) BLOCK DIAGRAM 3/3 (GATE ARRY & I/O SECTION)

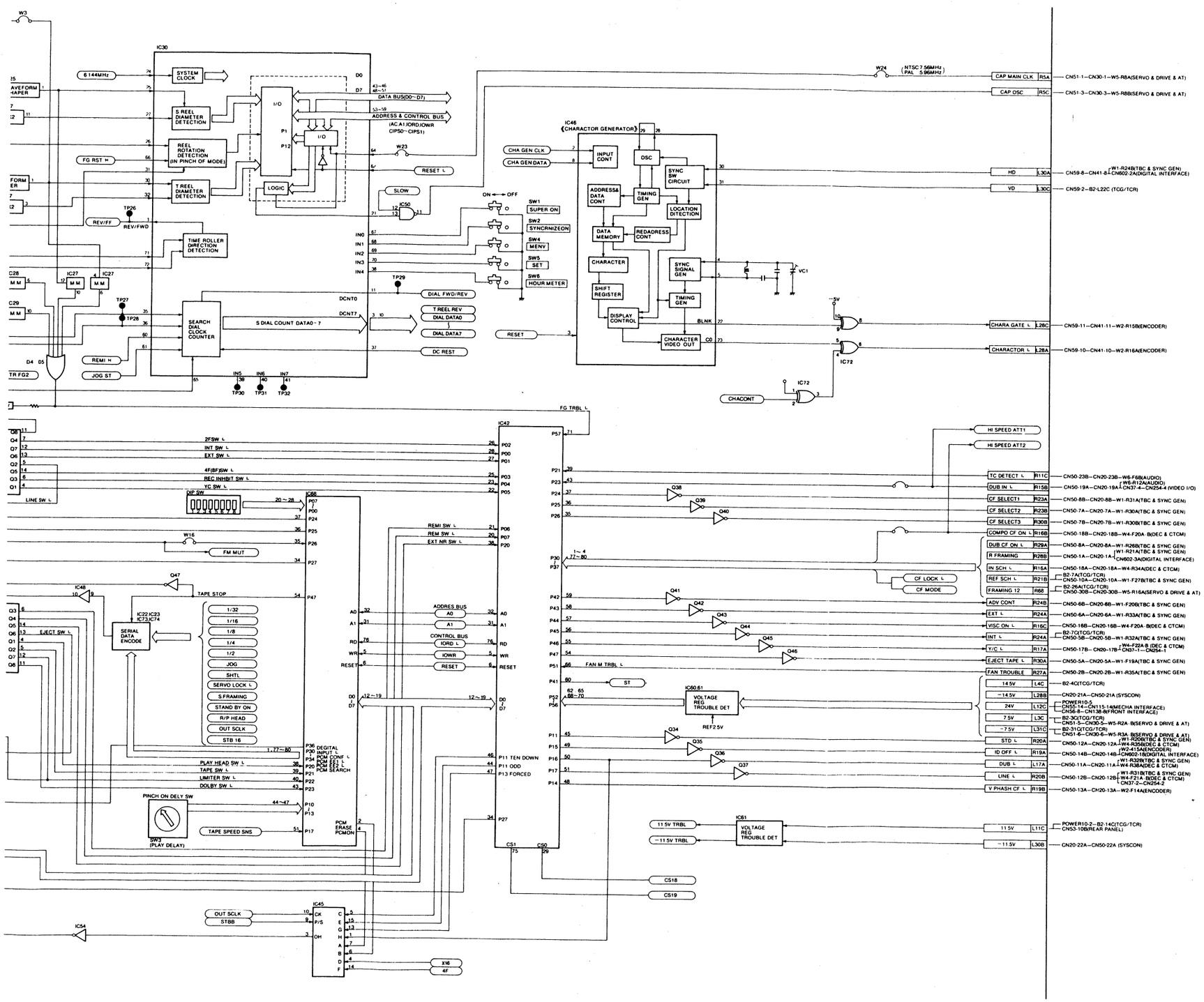

B2 (TC & BB) BLOCK DIAGRAM 1/2 (TCG/TCR SECTION)[FOR AU-665] ✳FOR AU-65/63/62, REFER TO AU-F65 SECTION

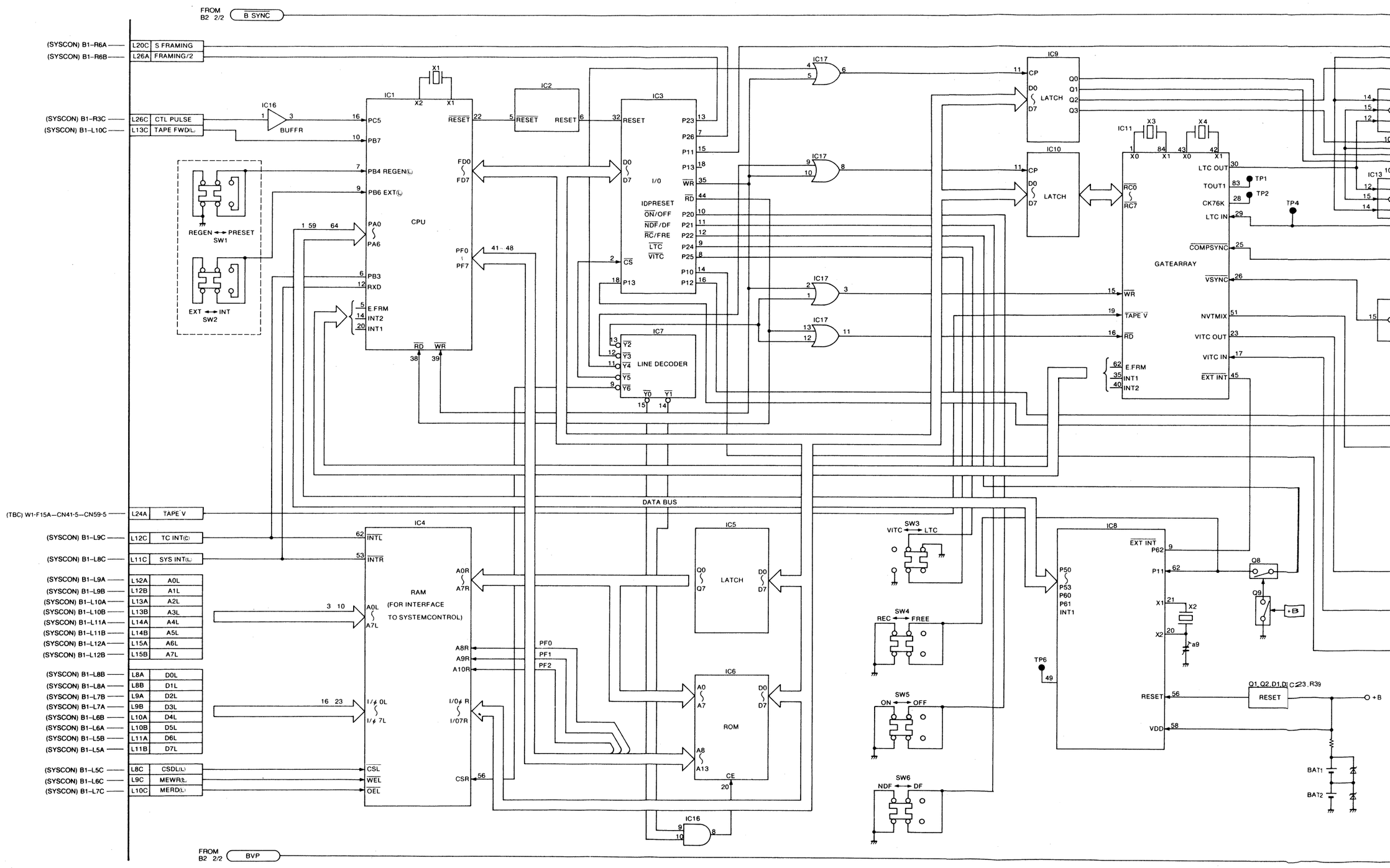

AM 1/2 (TCG/TCR SECTION)[FOR AU-665] ✳FOR AU-65/63/62, REFER TO AU-F65 SECTION

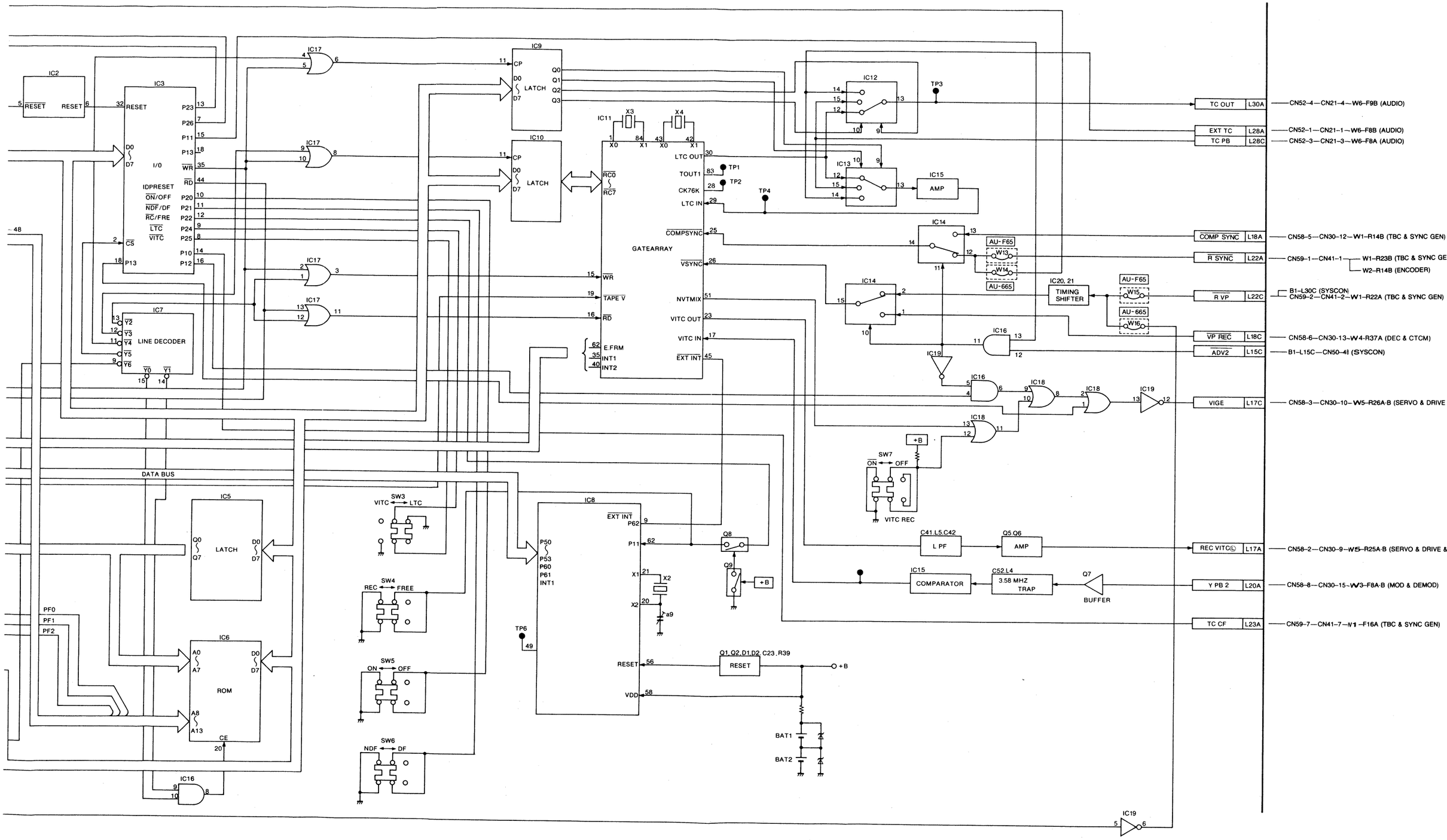

REVERSE SIDE TC & BLOC

B2 (TC & BB) BLOCK DIAGRAM 2/2 (BLACK BURST SECTION)[FOR AU-665]

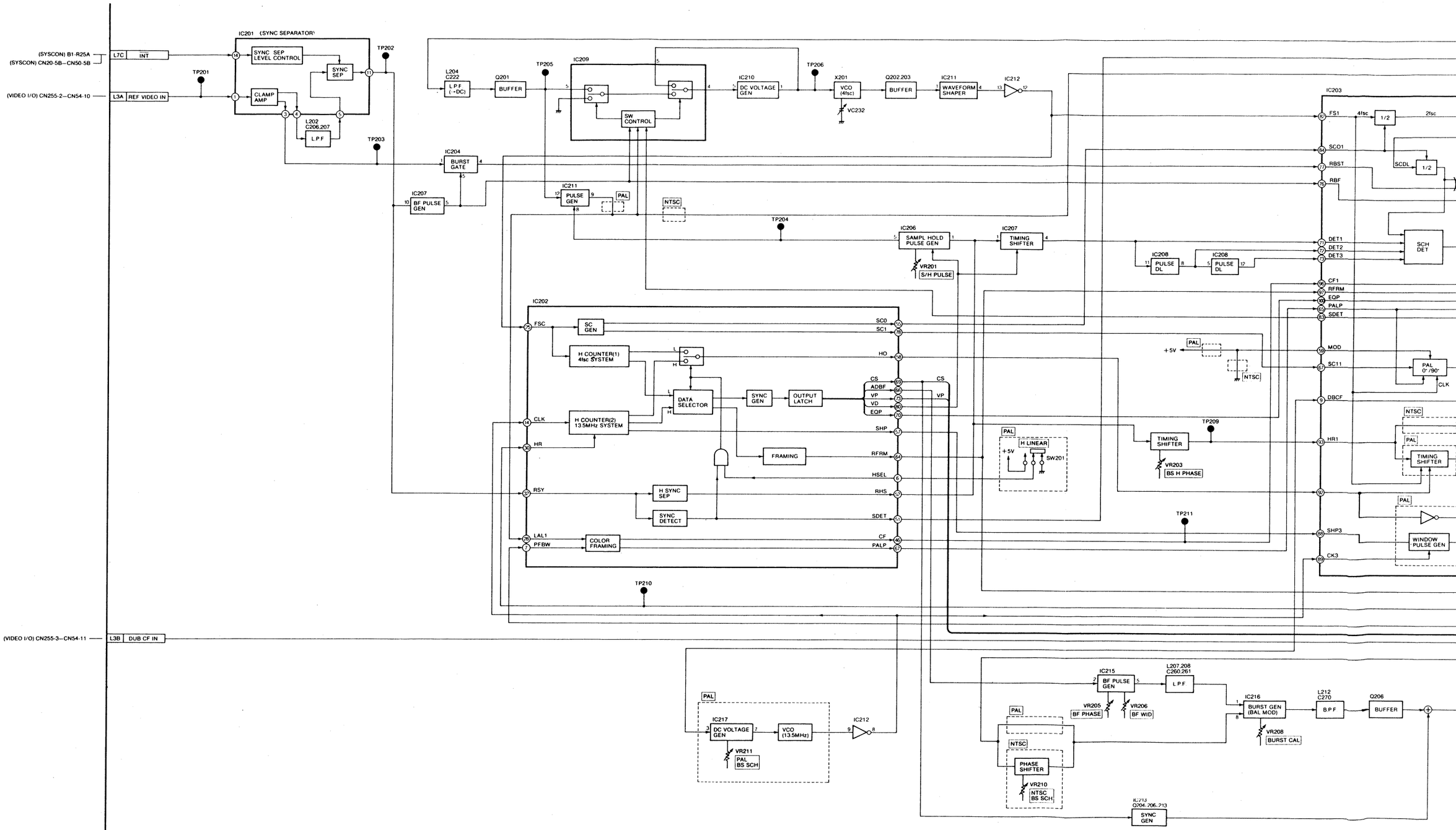

LACK BURST SECTION)[FOR AU-665]

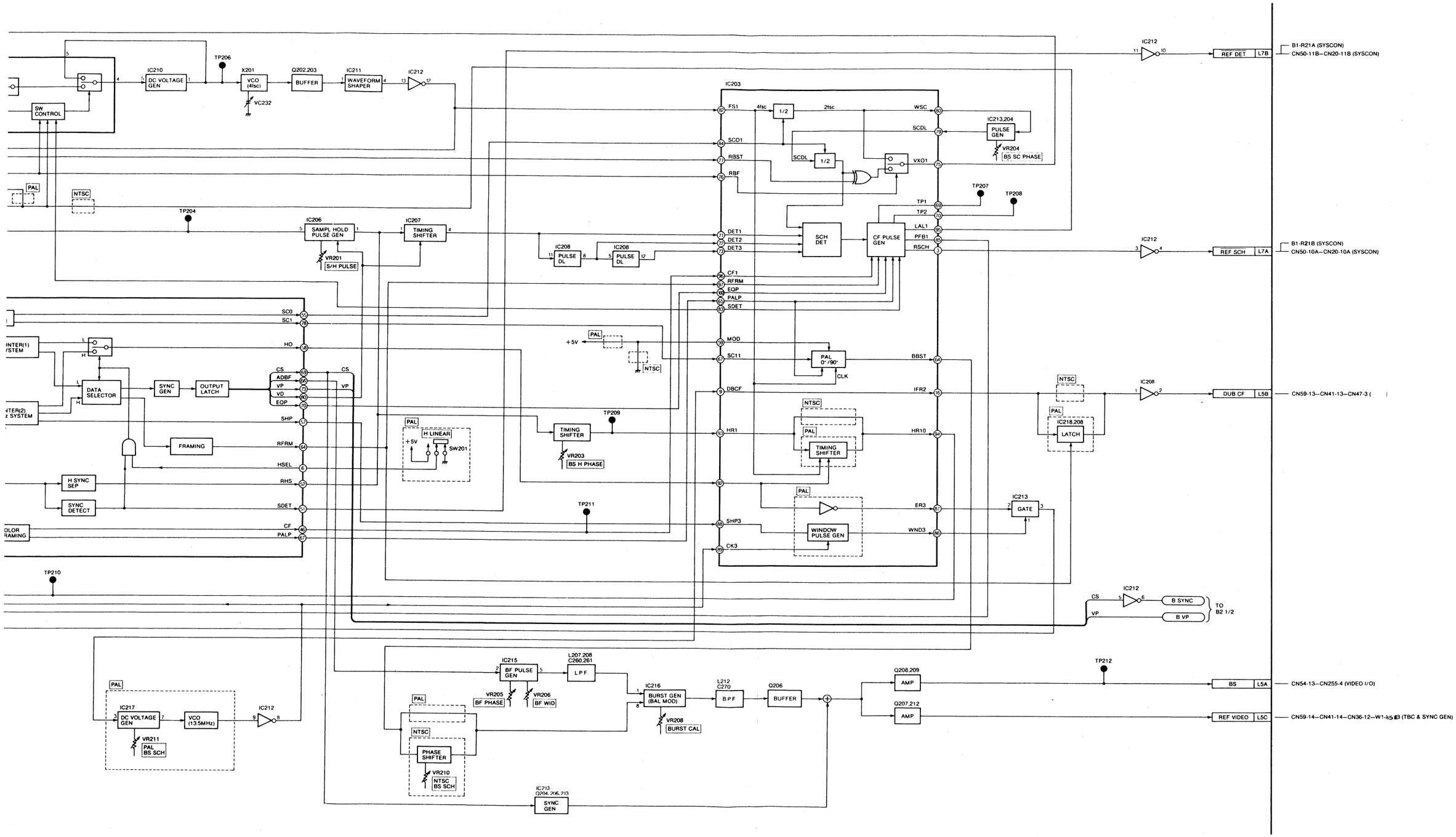

AT POWER BLOCK DIAGRAM[FOR AU-665,AU-63]

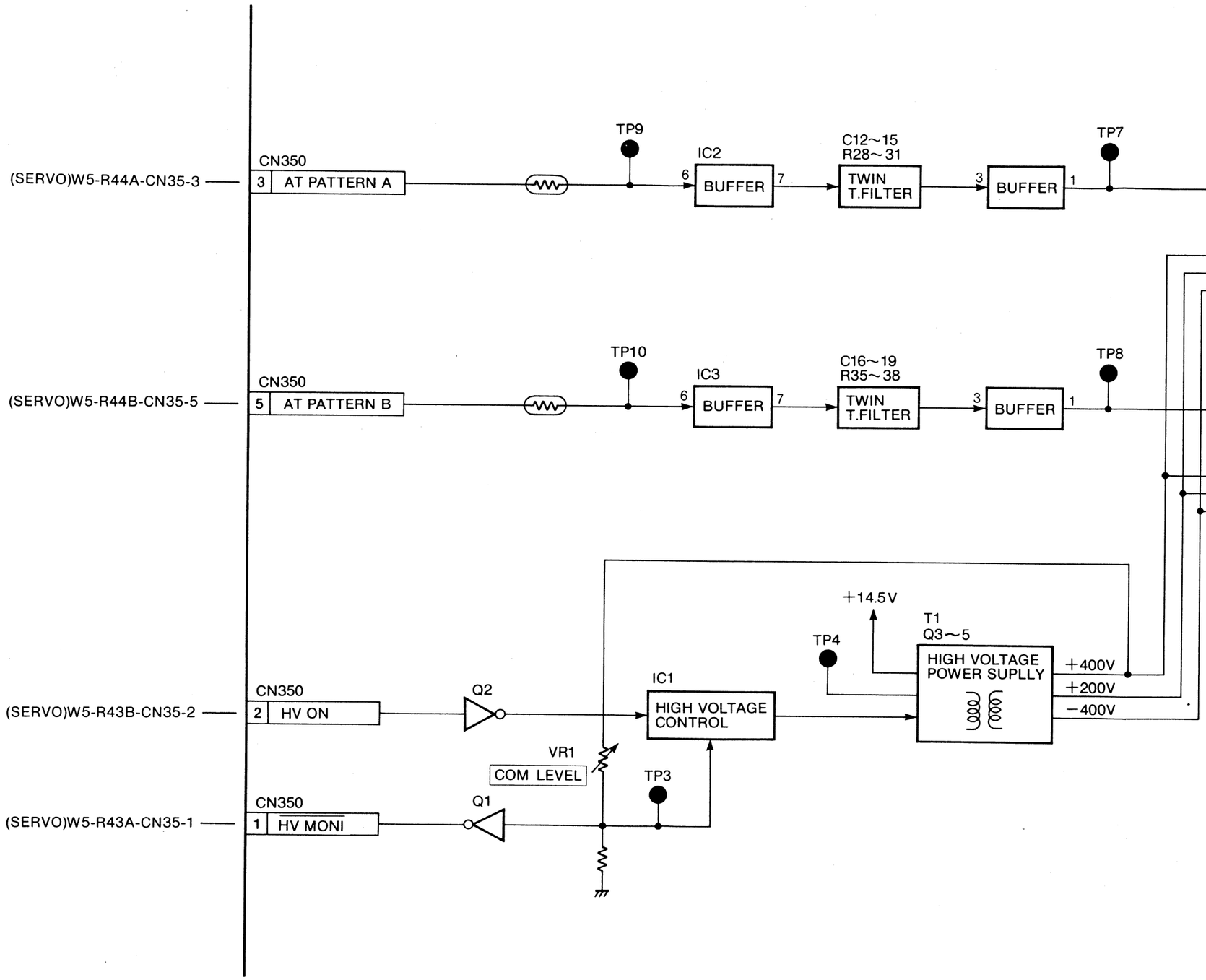

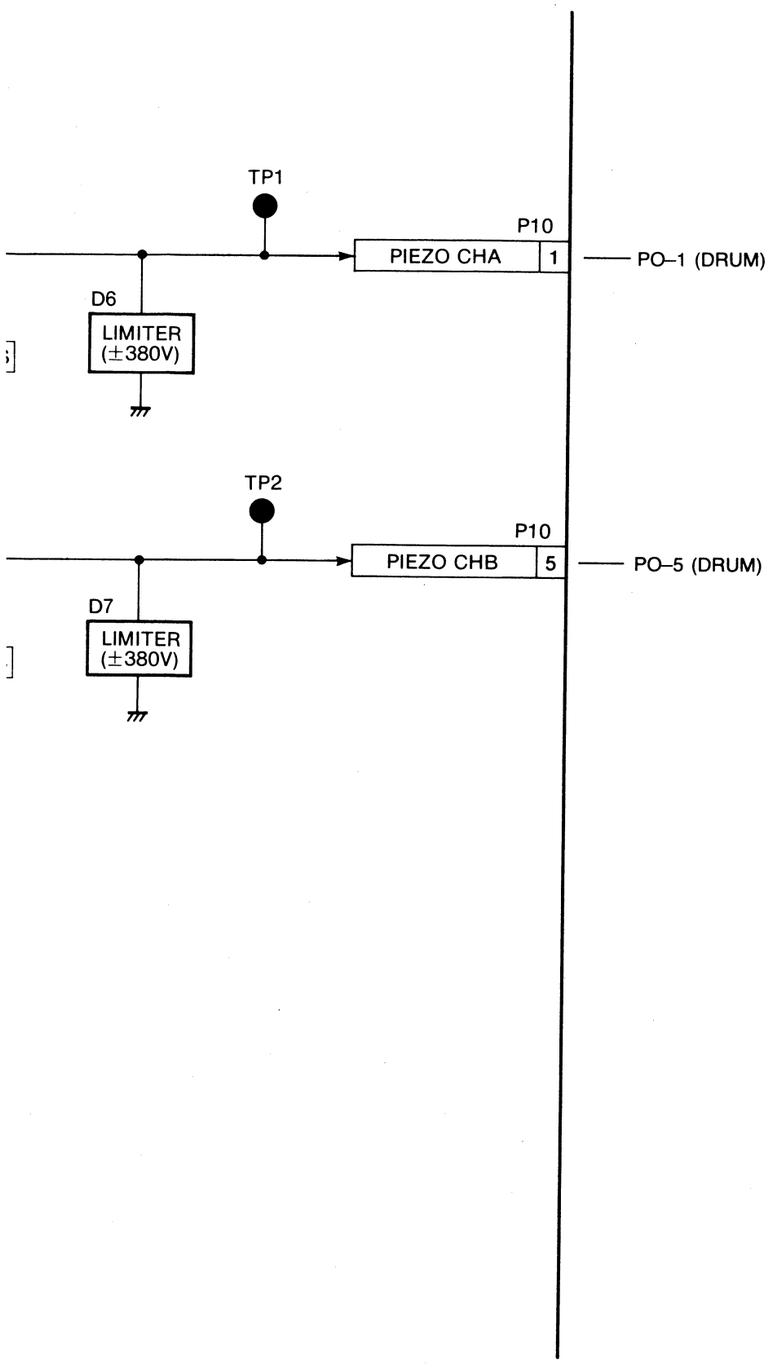

AUDIO I/O BLOCK DIAGRAM

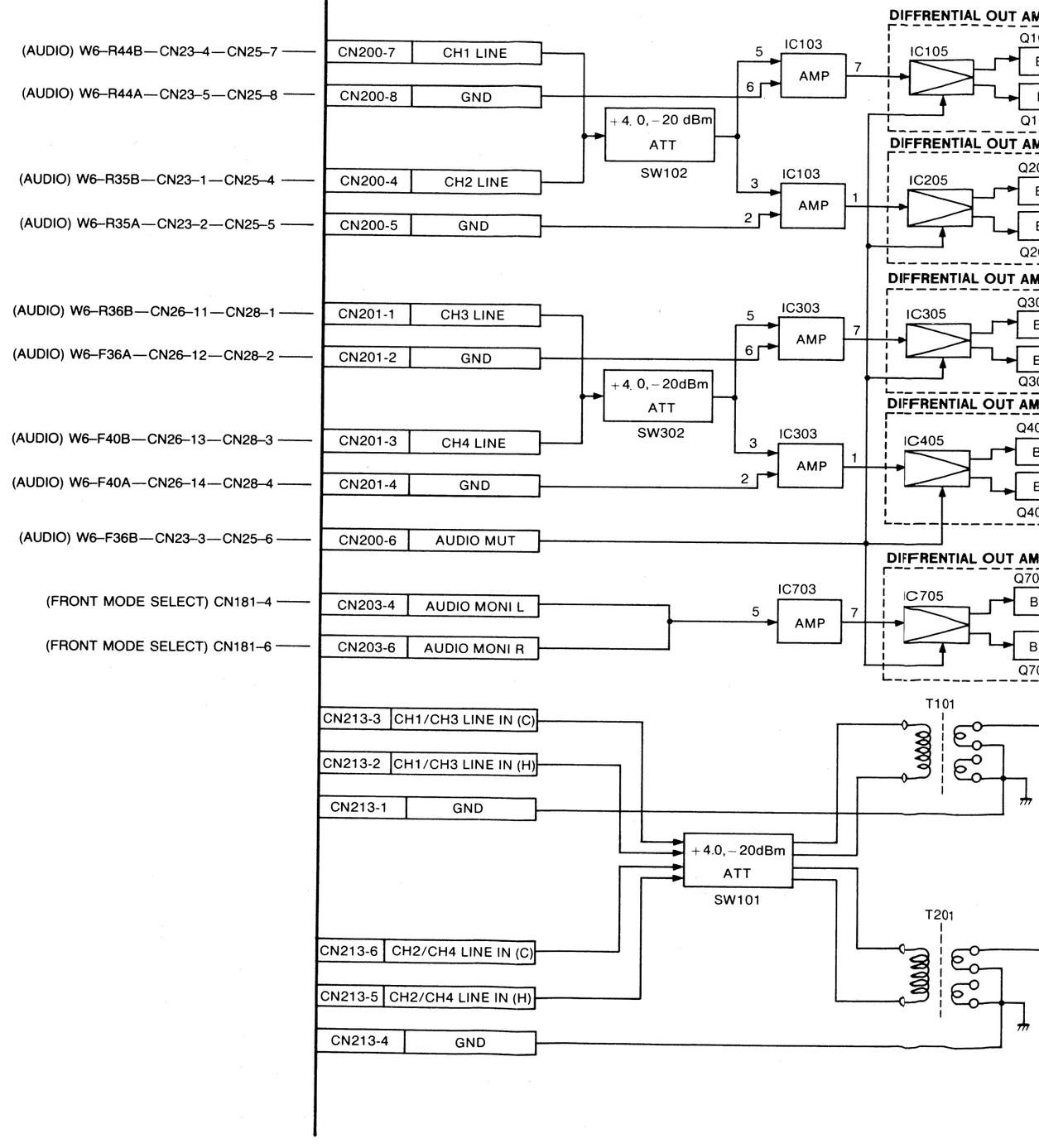

AUDIO I/O BLOCK DIAGRAM

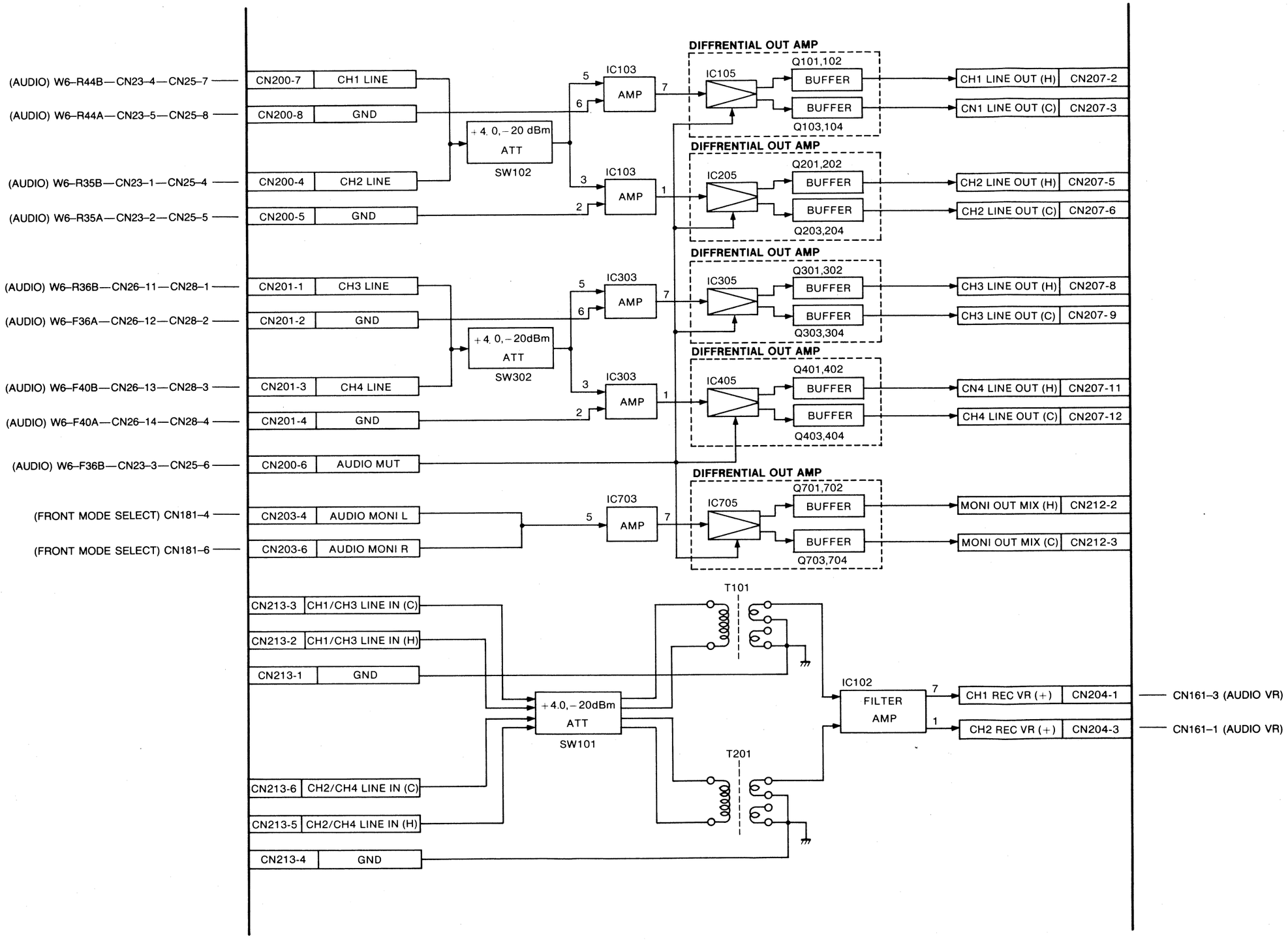

REVERSE SIDE AUDIO VR BLOCK DIAGR

AUDIO VR BLOCK DIAGRAM[FOR AU-665]

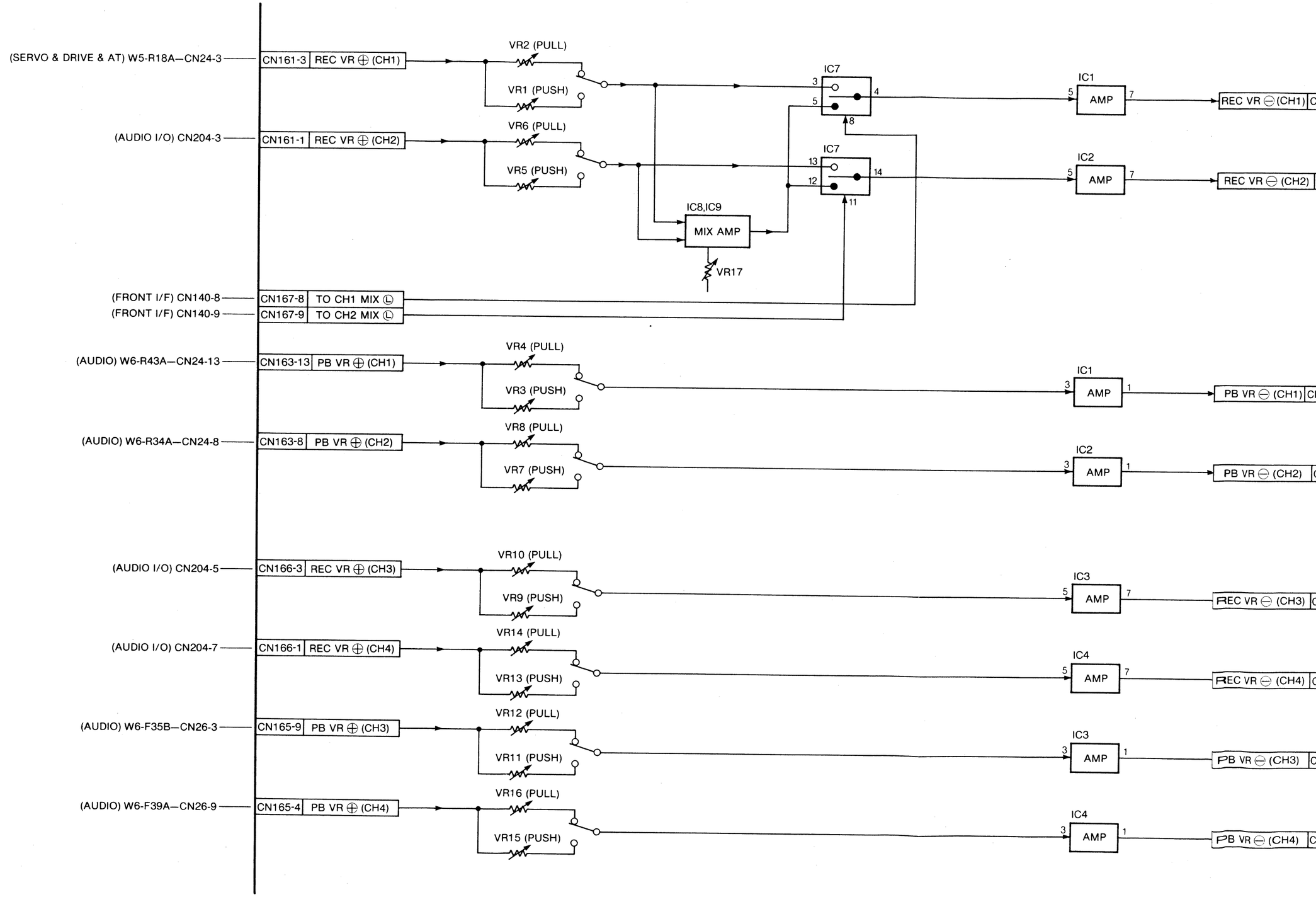

AUDIO VR BLOCK DIAGRAM[FOR AU-65,AU-63,AU-62]

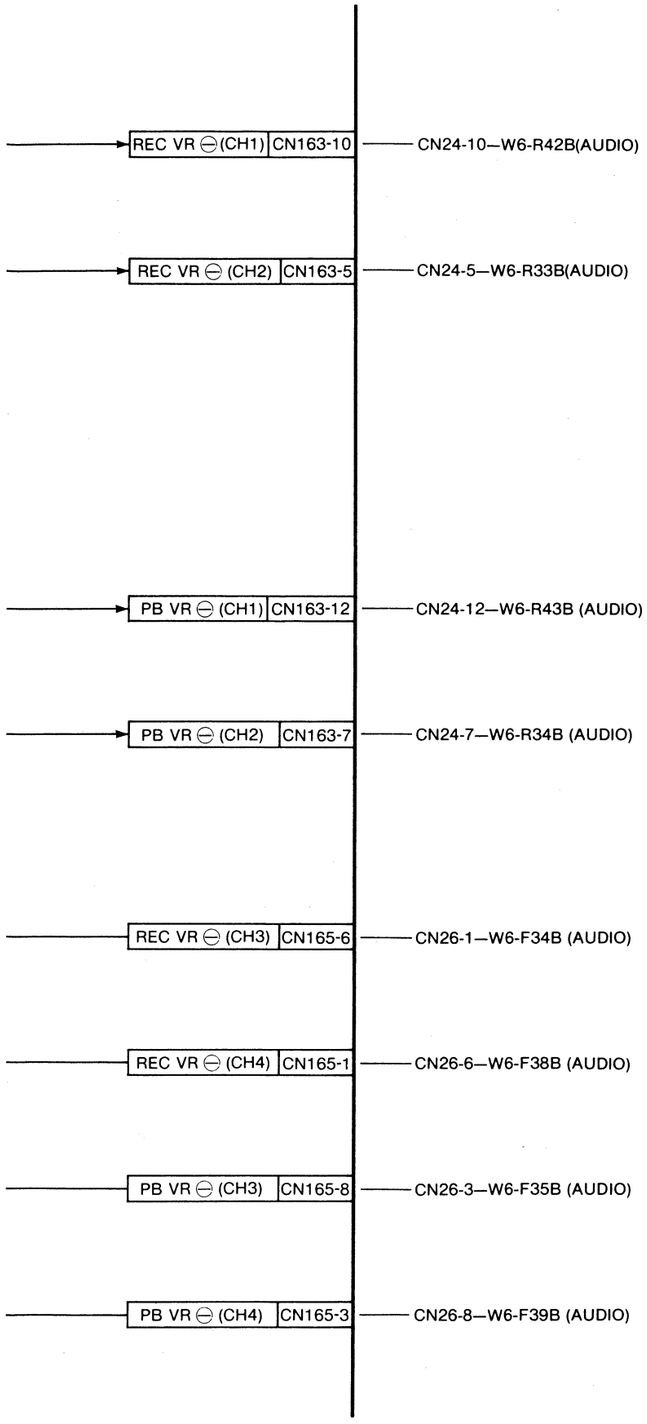

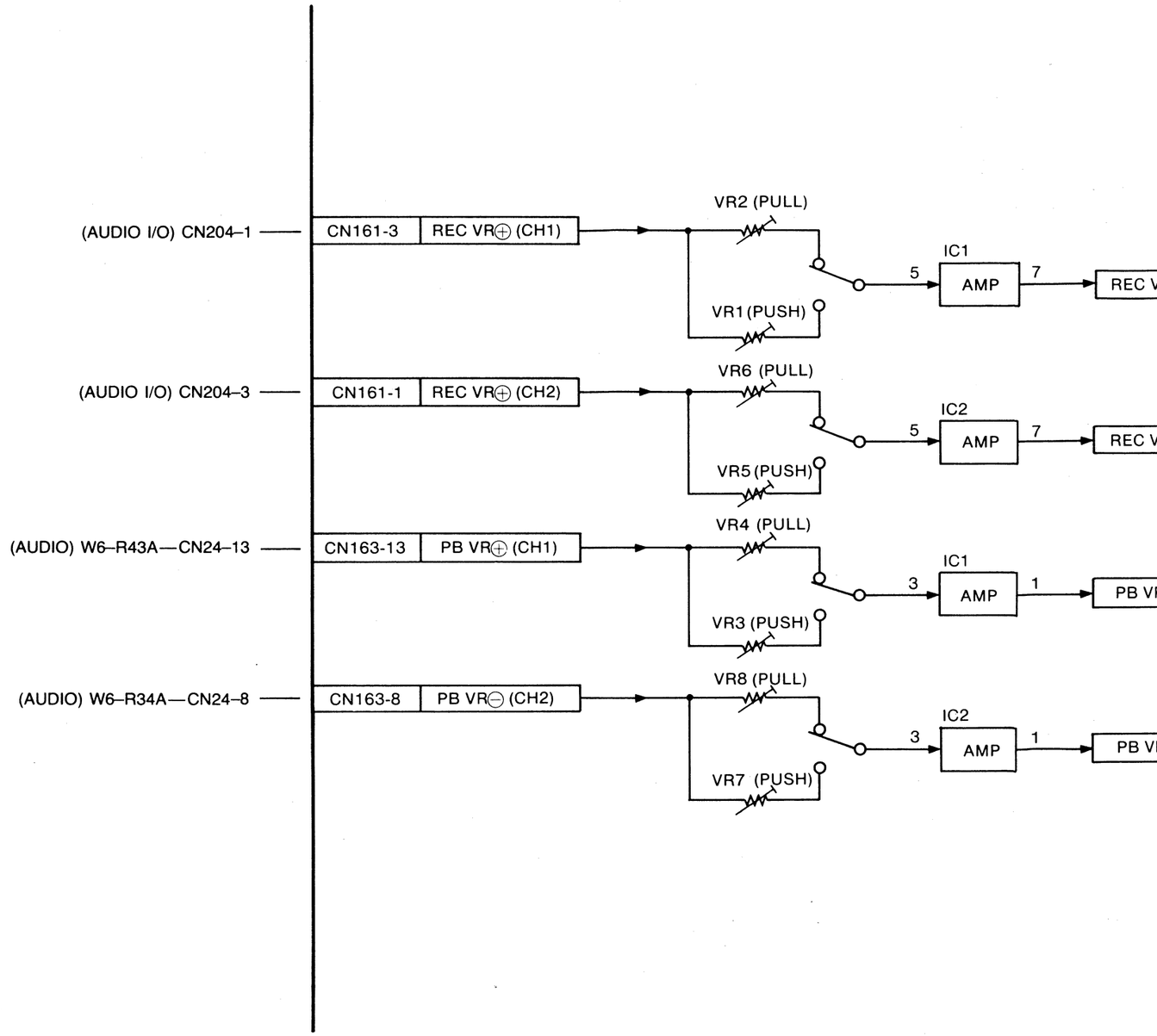

AUDIO VR BLOCK DIAGRAM[FOR AU-65,AU-63,AU-62]

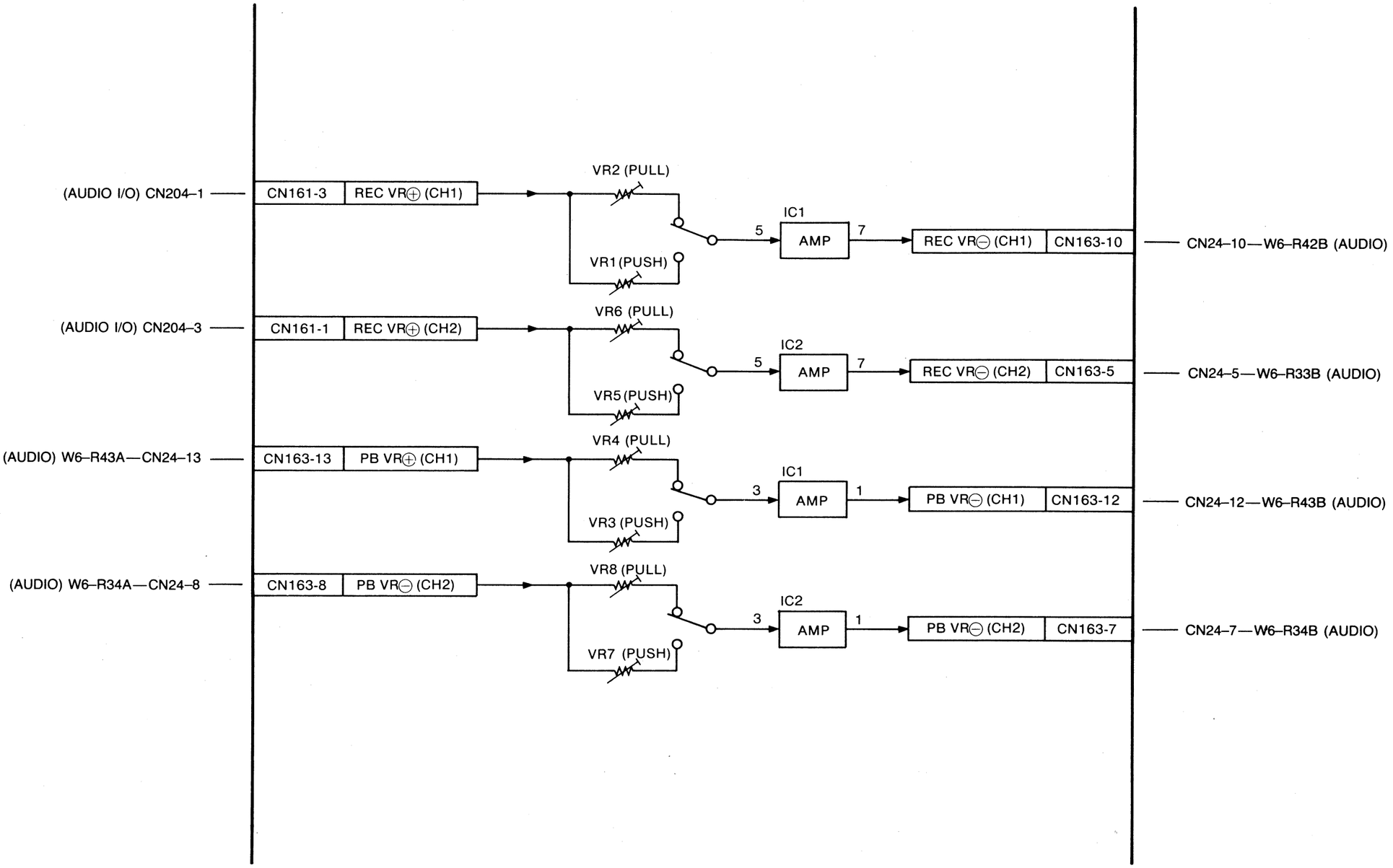

FRONT PANEL A.B.C BLOCK DIAGRAM[FOR AU-665 NTSC]

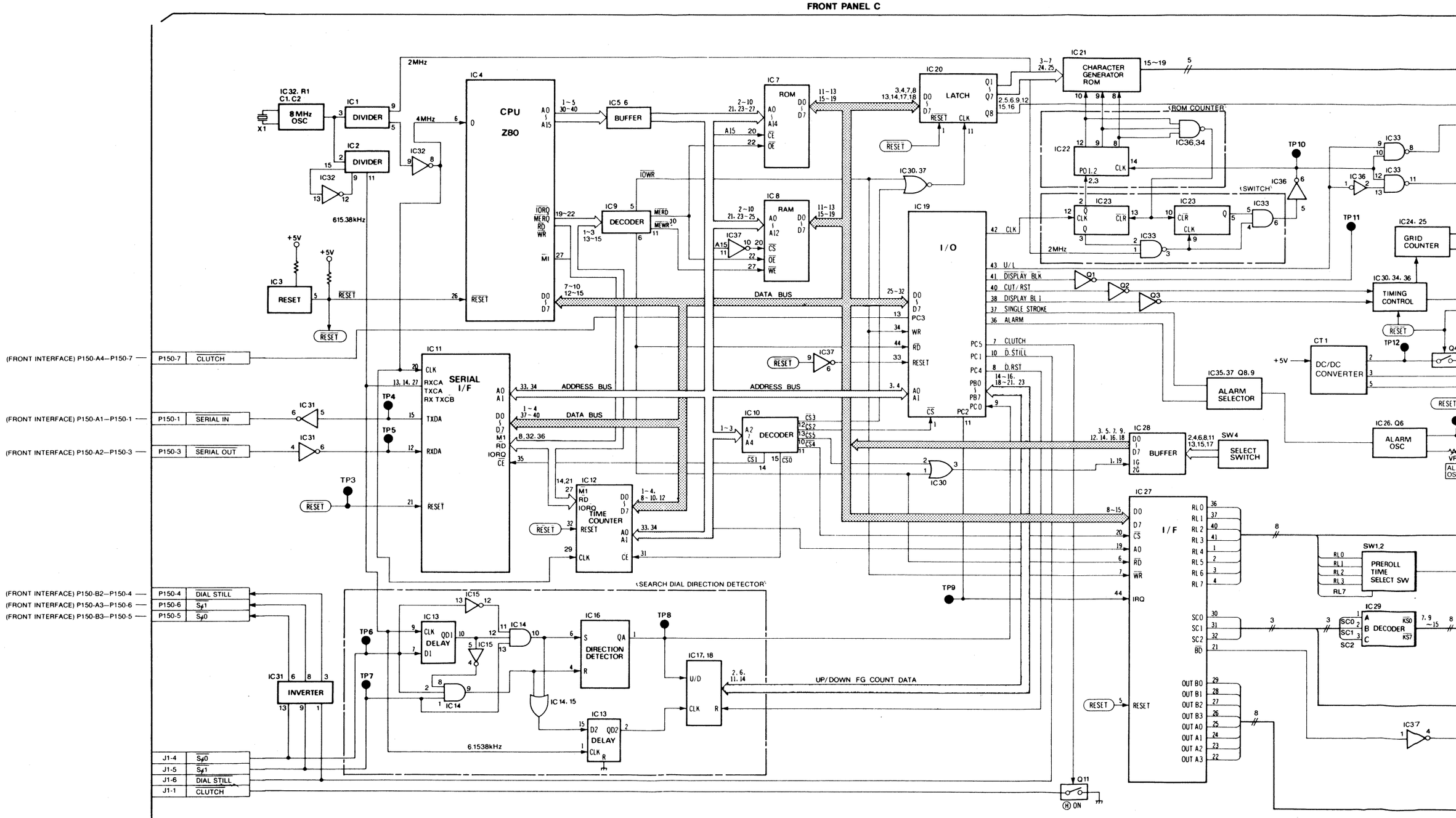

GRAM[FOR AU-665 NTSC]

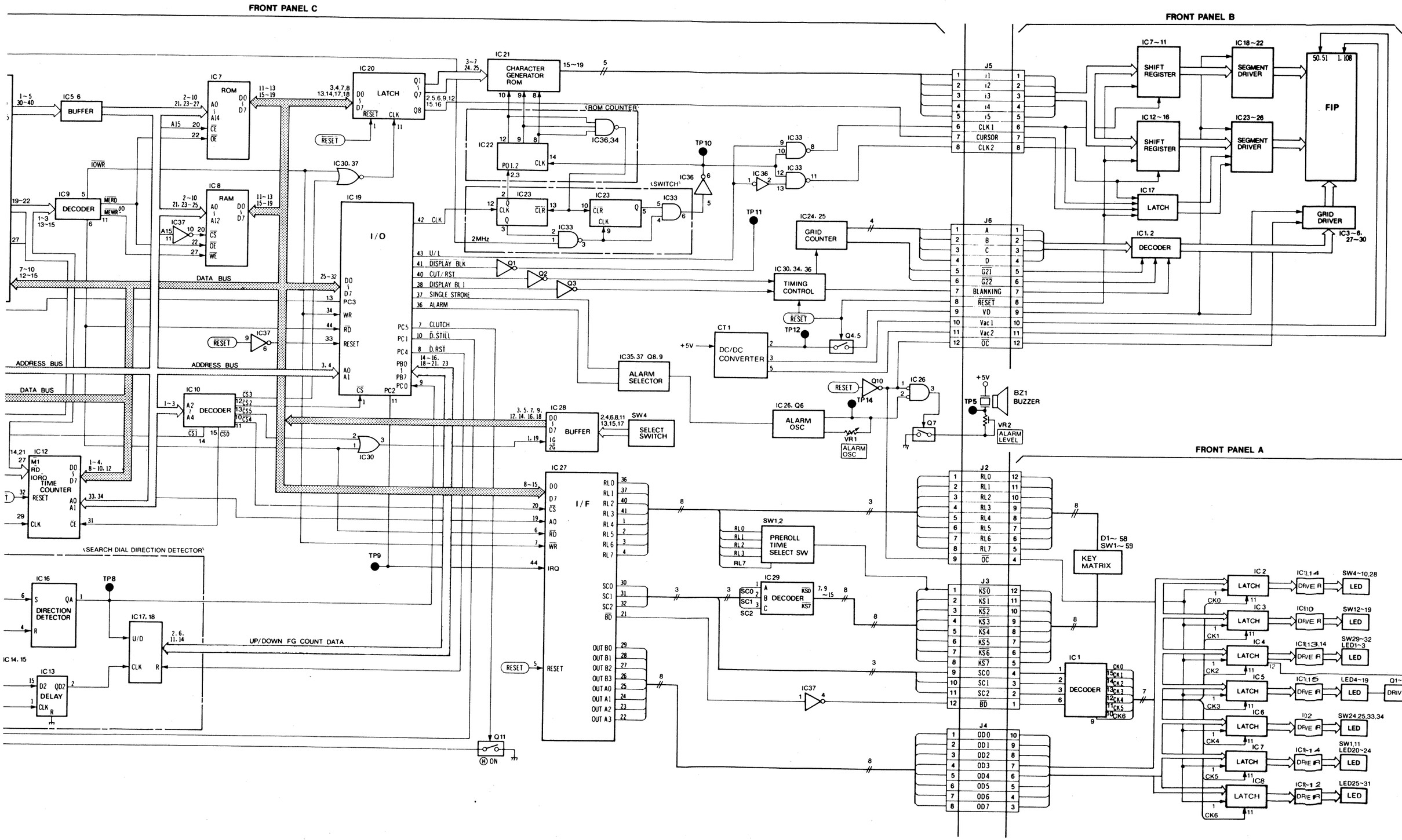

REVERSE SIDE FRONT PA BLOCK D

FRONT PANEL A.B.C BLOCK DIAGRAM[FOR AU-65]

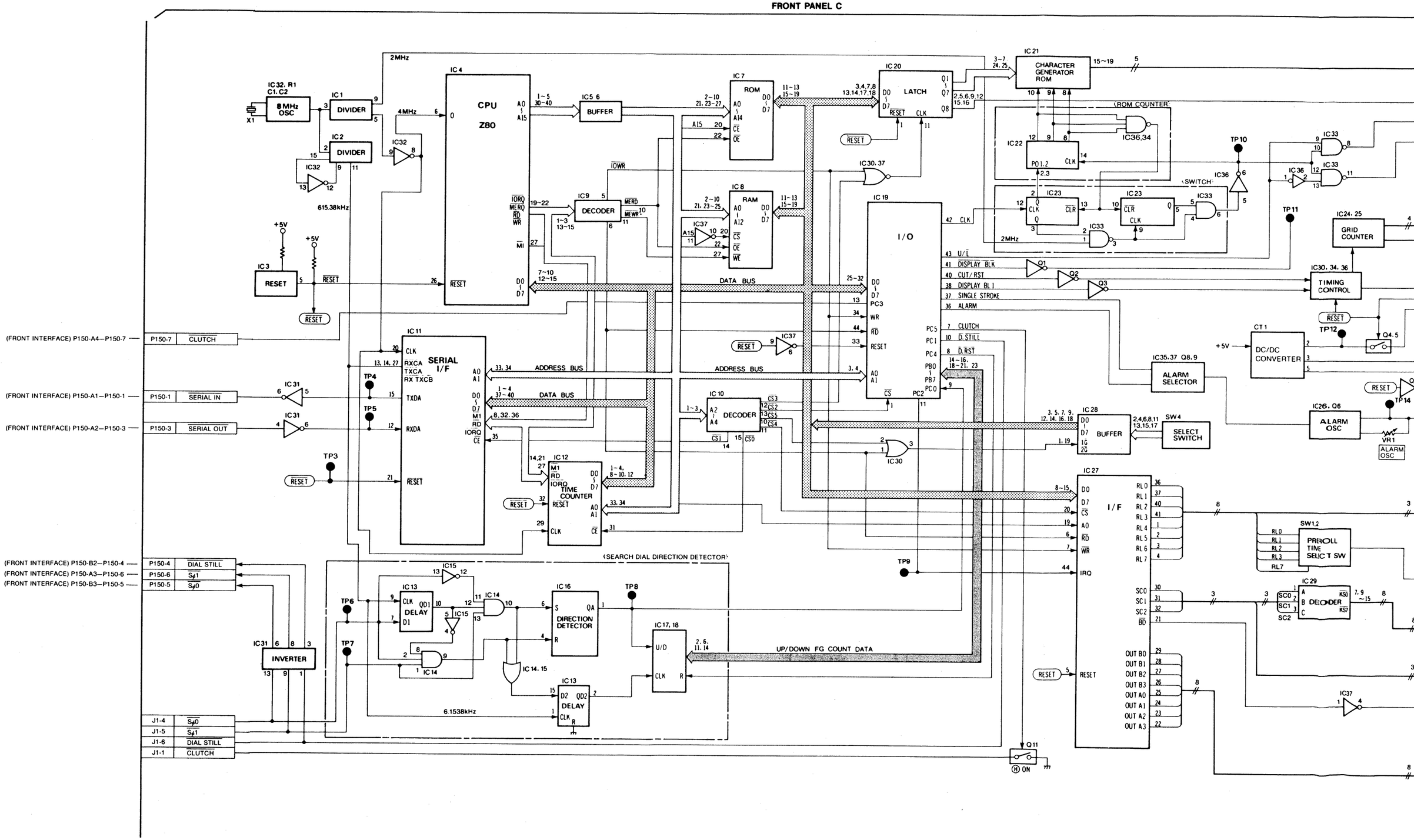

FRONT PANEL C

FRONT PANEL B

FRONT PANEL A

IC7 ROM
IC8 RAM
IC19 I/O
IC20 LATCH
IC21 CHARACTER GENERATOR ROM
IC22
IC23
IC24, 25 GRID COUNTER
IC30, 34, 36 TIMING CONTROL
IC30, 37
IC33
IC33, 34
IC35, 37 Q8, 9 ALARM SELECTOR
IC36
IC37
IC26, Q6 ALARM OSC
IC26
IC27 I/F
IC28 BUFFER
IC29 DECODER
IC30
IC10 DECODER
IC17, 18
CT1 DC/DC CONVERTER
Q1
Q2
Q3
Q4, 5
Q7
Q10
Q11
SW1, 2 PREROLL TIME SELECT SW
SW4 SELECT SWITCH
VR1 ALARM OSC
VR2 ALARM LEVEL
BZ1 BUZZER
TP5
TP8
TP9
TP10
TP11
TP12
TP14
J5
J6
J2
J3
J4
IC7~11 SHIFT REGISTER
IC12~16 SHIFT REGISTER
IC18~22 SEGMENT DRIVER
IC23~26 SEGMENT DRIVER
FIP
IC17 LATCH
GRID DRIVER
IC1, 2 DECODER
IC3~6, 27~30
KEY MATRIX
D1~42 SW1~44
IC1 DECODER
IC2 LATCH
IC3 LATCH
IC4 LATCH
IC5 LATCH
IC6 LATCH
IC7 LATCH
IC8 LATCH
IC13, 14 DRIVER
IC9, 10 DRIVER
IC10, 13, 14 DRIVER
IC14, 15 DRIVER
IC12 DRIVER
IC11~14 DRIVER
IC10~12 DRIVER
SW4~10, 28
SW12~19
SW29~32 LED1~3
LED4~19
SW24, 25, 33, 34
SW1, 11 LED20~24
LED25~31
LED
Q1~3 DRIVER
DATA BUS
ADDRESS BUS
UP/DOWN FG COUNT DATA
SEARCH DIAL DIRECTION DETECTOR
ROM COUNTER
SWITCH
RESET
2MHz
+5V
ON

FRONT PANEL A.C BLOCK DIAGRAM[FOR AU-63,AU-62]

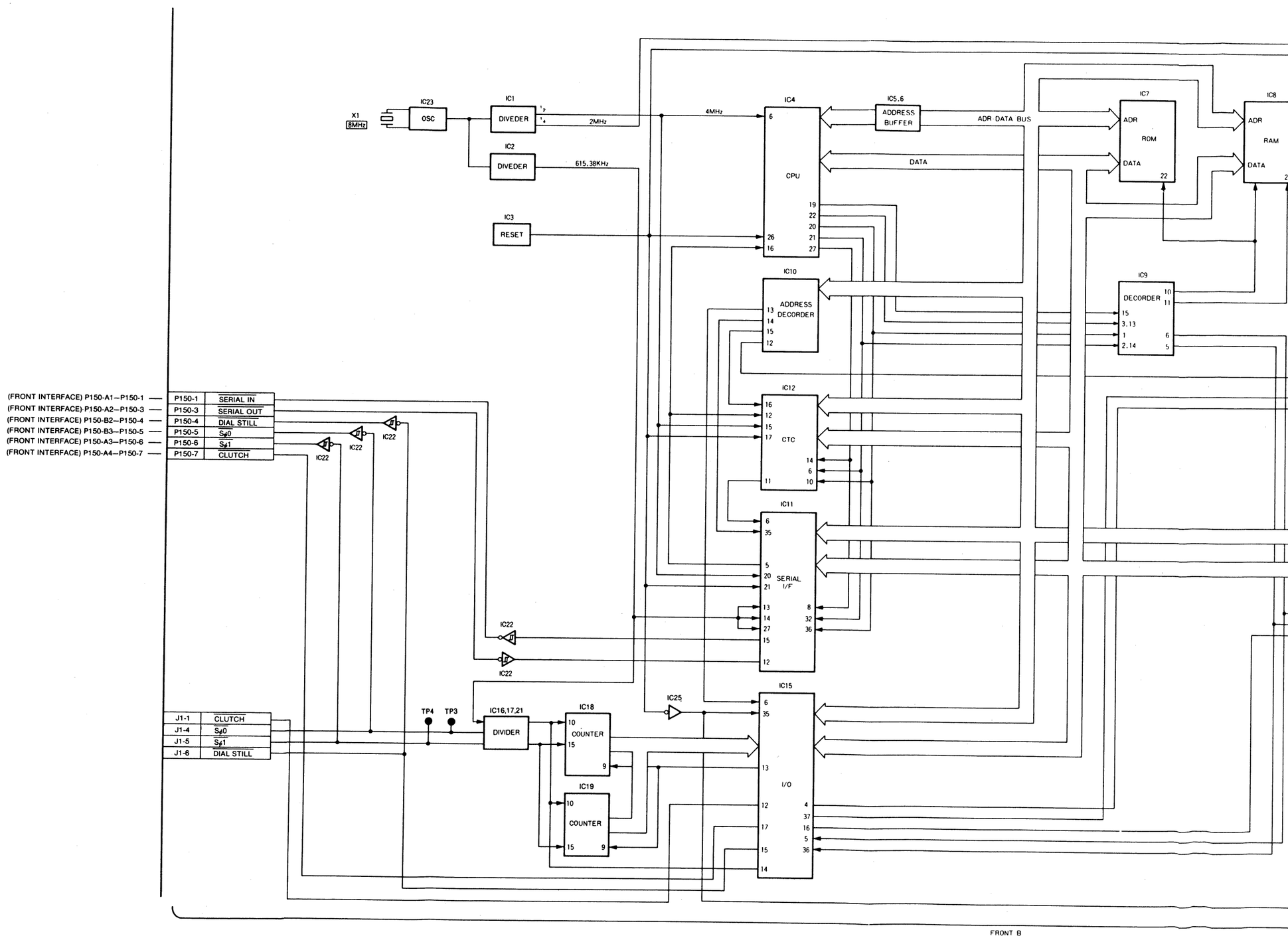

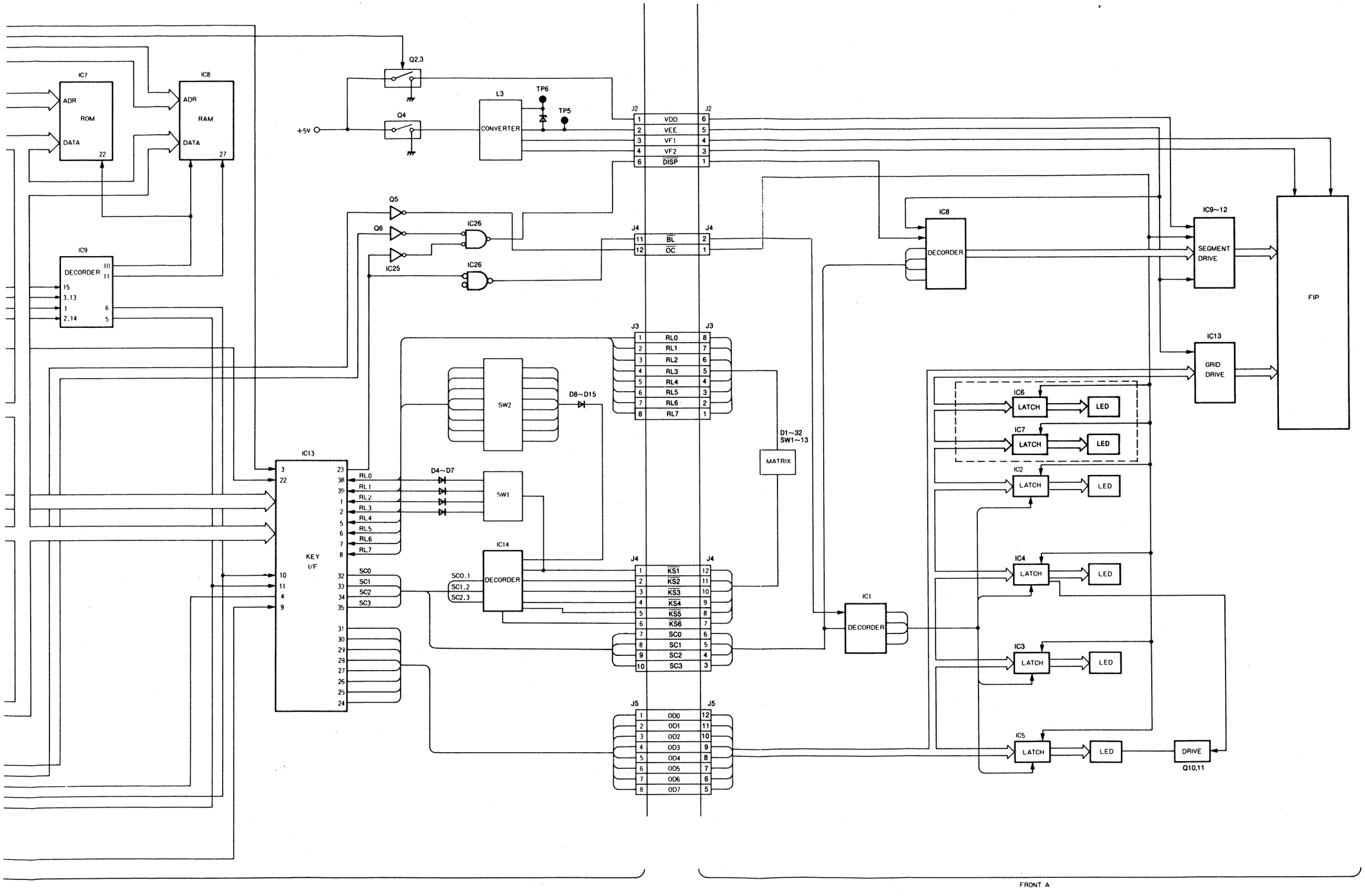
IC7
ADR
ROM
DATA
22
IC8
ADR
RAM
DATA
27
IC9
DECORDER
10
11
15
3,13
1
2,14
6
5
Q2,3
Q4
+5V
L3
CONVERTER
TP6
TP5
J2
1 VDD 6
2 VEE 5
3 VF1 4
4 VF2 3
6 DISP 1
Q5
Q6
IC25
IC26
IC26
J4
11 BL 2
12 OC 1
IC8
DECORDER
IC9~12
SEGMENT DRIVE
FIP
IC13
GRID DRIVE
J3
1 RL0 8
2 RL1 7
3 RL2 6
4 RL3 5
5 RL4 4
6 RL5 3
7 RL6 2
8 RL7 1
SW2
D8~D15
D1~32
SW1~13
MATRIX
IC6
LATCH
LED
IC7
LATCH
LED
IC2
LATCH
LED
IC13
3
22
23
38
39
1
2
5
6
7
8
RL0
RL1
RL2
RL3
RL4
RL5
RL6
RL7
KEY I/F
10
11
4
9
32
33
34
35
31
30
29
28
27
26
25
24
SC0
SC1
SC2
SC3
D4~D7
SW1
IC14
DECORDER
SC0,1
SC1,2
SC2,3
J4
1 KS1 12
2 KS2 11
3 KS3 10
4 KS4 9
5 KS5 8
6 KS6 7
7 SC0 6
8 SC1 5
9 SC2 4
10 SC3 3
IC1
DECORDER
IC4
LATCH
LED
IC3
LATCH
LED
J5
1 OD0 12
2 OD1 11
3 OD2 10
4 OD3 9
5 OD4 8
6 OD5 7
7 OD6 6
8 OD7 5
IC5
LATCH
LED
DRIVE
Q10,11
FRONT A

FRONT SW & VR
BLOCK DIAGRAM

FRONT SW & VR BLOCK DIAGRAM

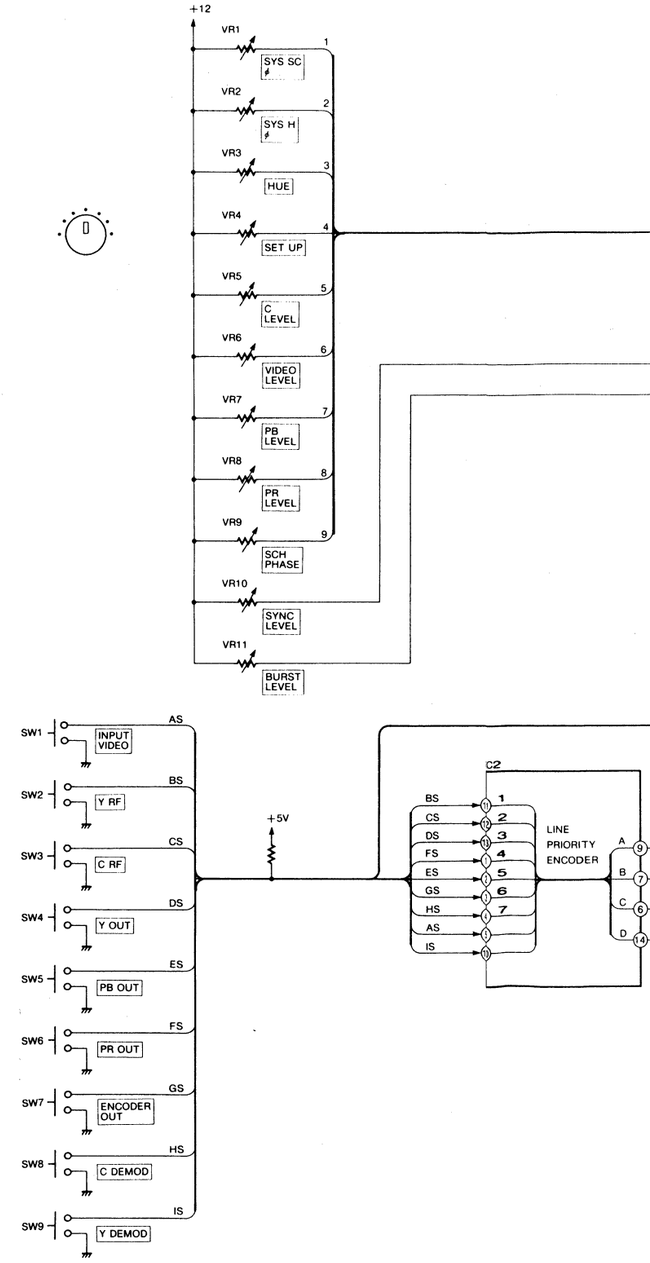

REVERSE SIDE FRONT PANEL
BLOCK DIAGRAM

:K DIAGRAM [FOR AU-665]

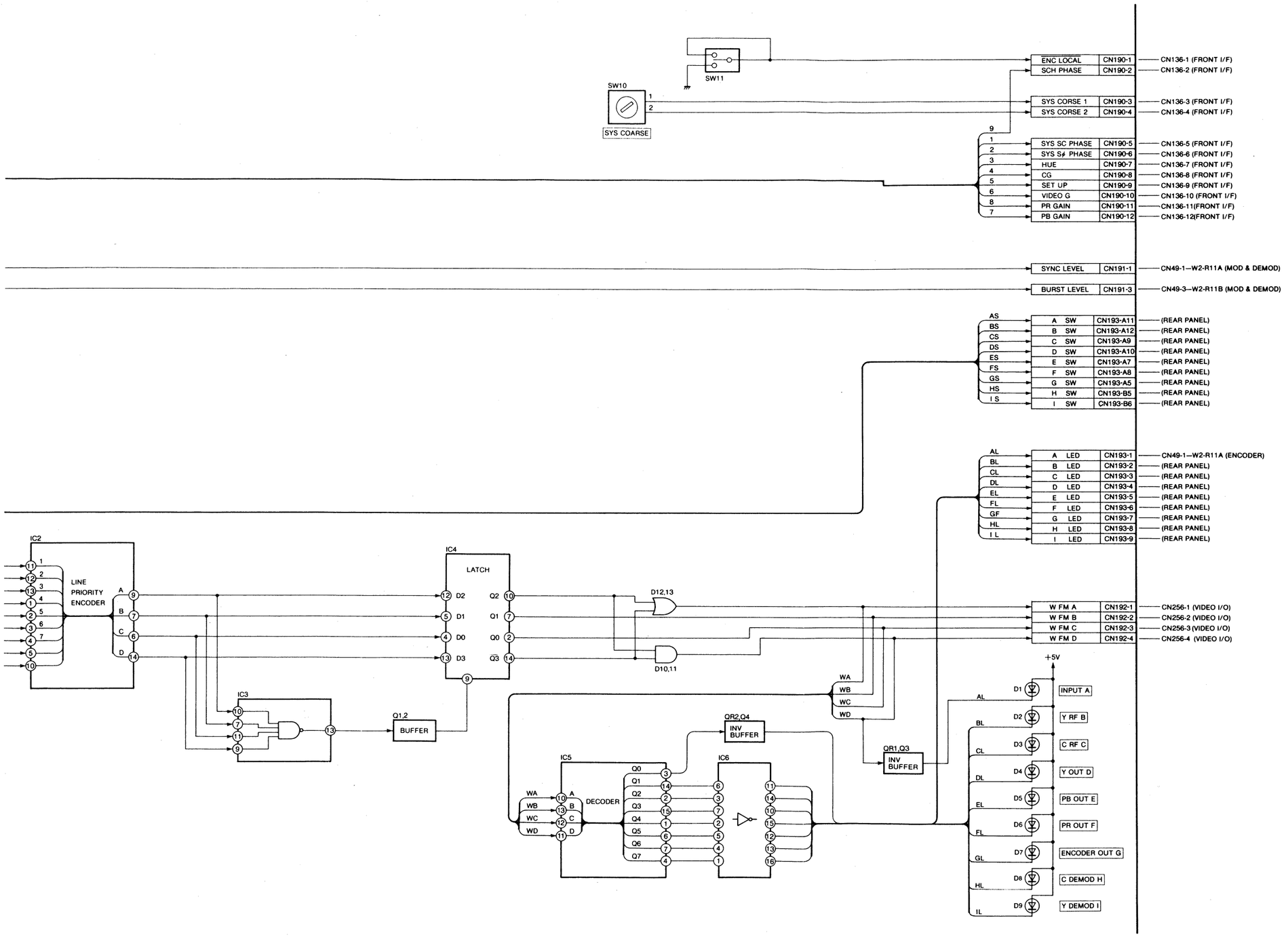

RA & HA BLOCK DIAGRAM

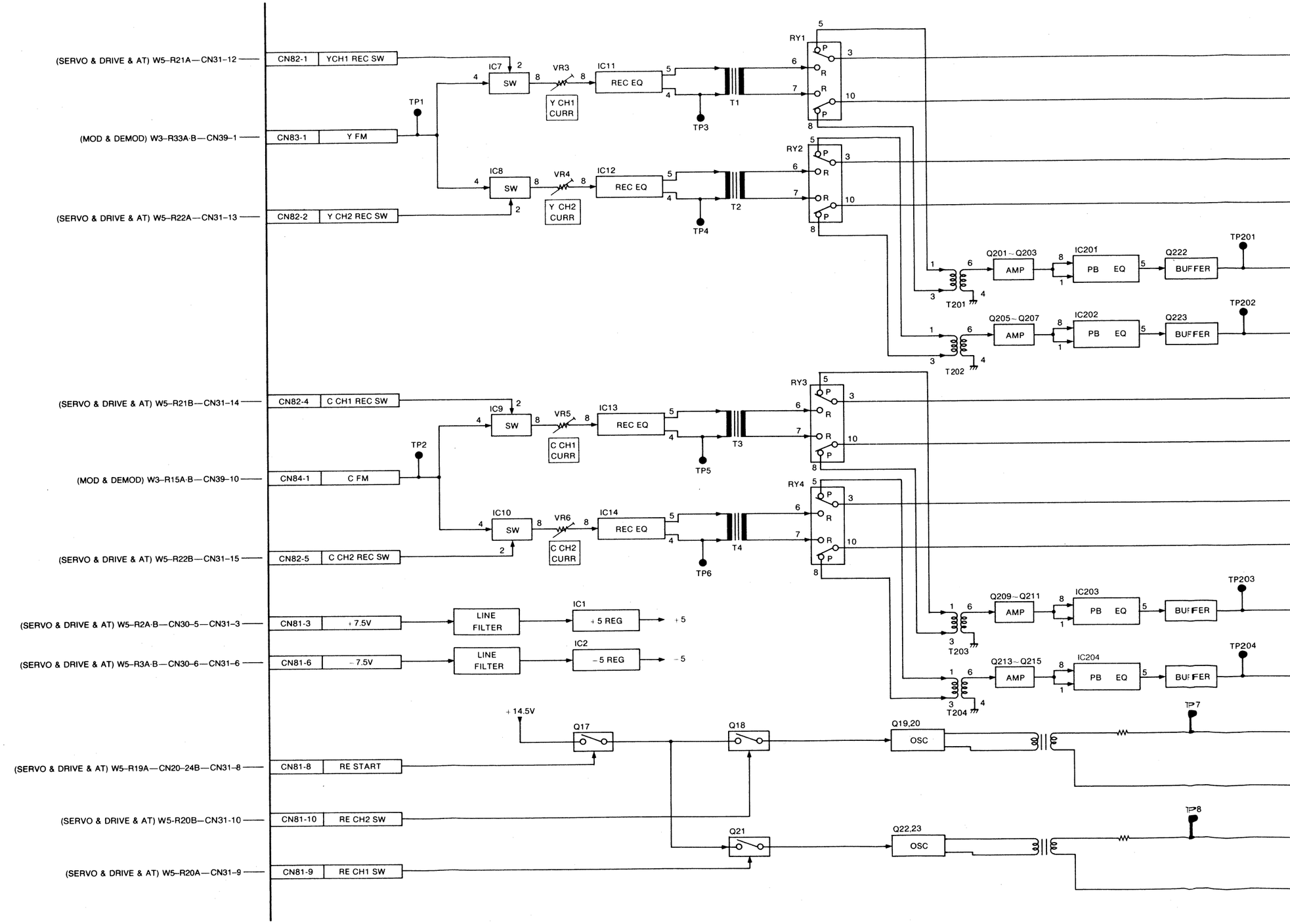

RA & HA BLOCK DIAGRAM

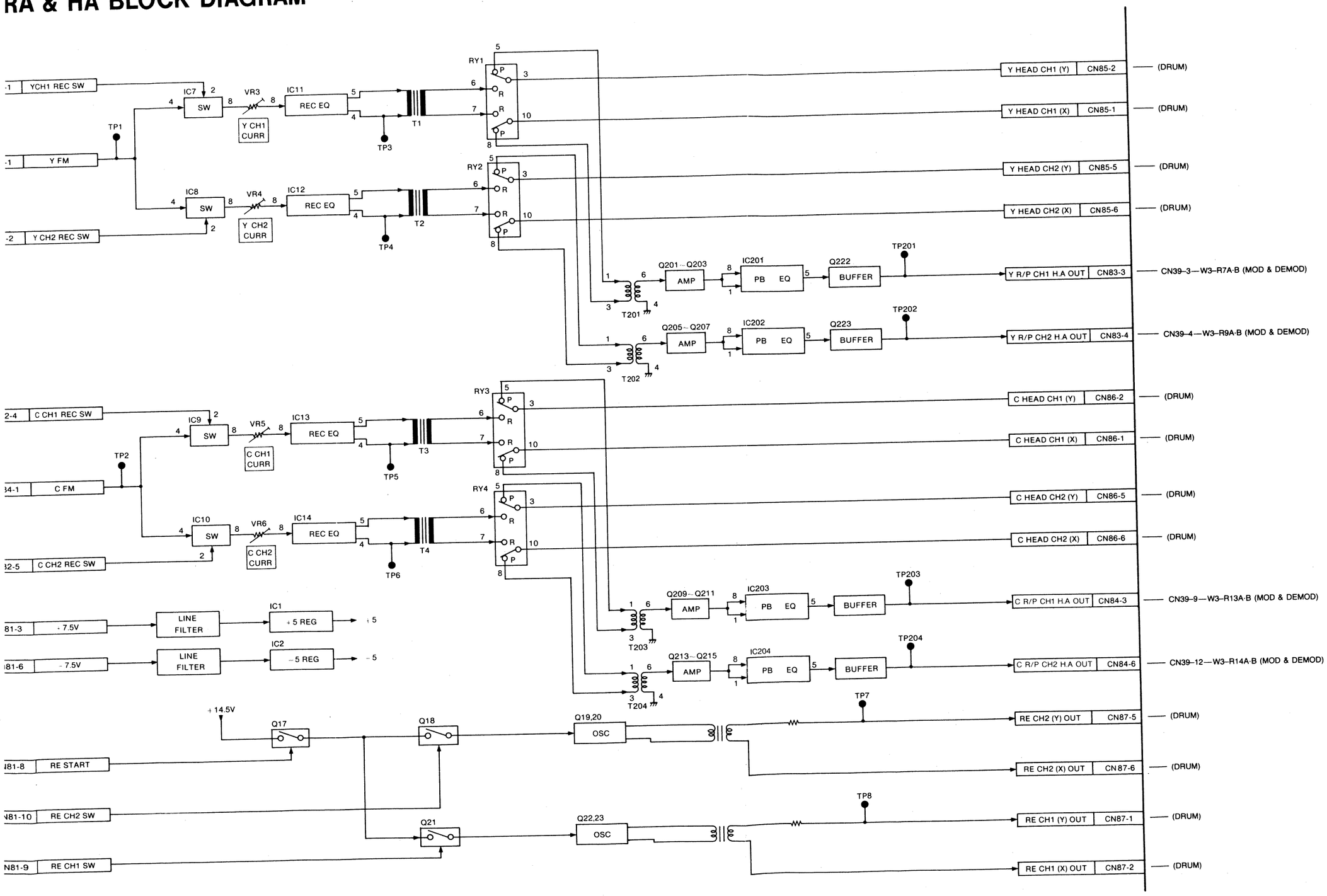

REVERSE SIDE VIDEO BLOCK

VIDEO I/O BLOCK DIAGRAM 1/2[FOR AU-665]

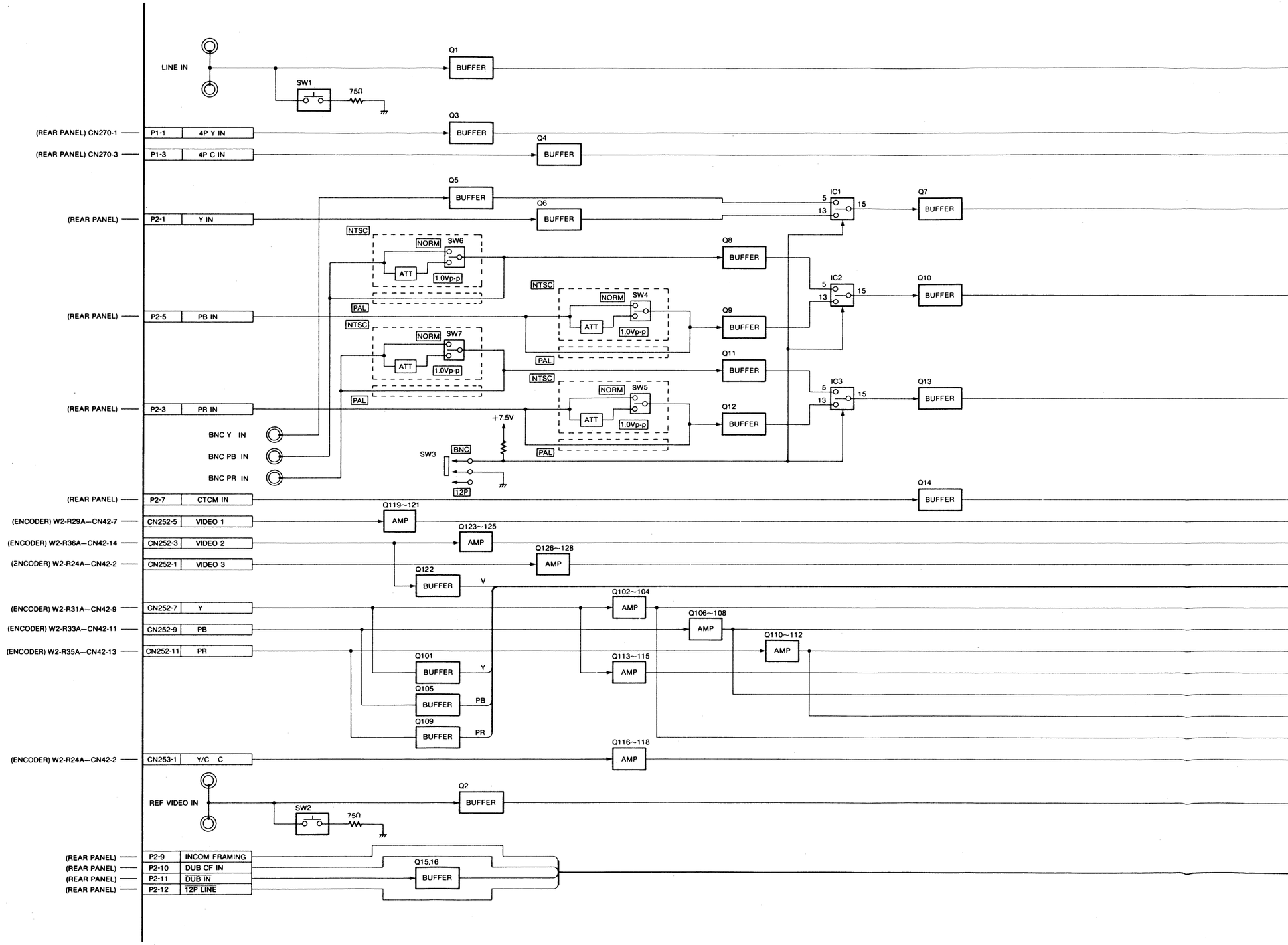

CK DIAGRAM 1/2[FOR AU-665]

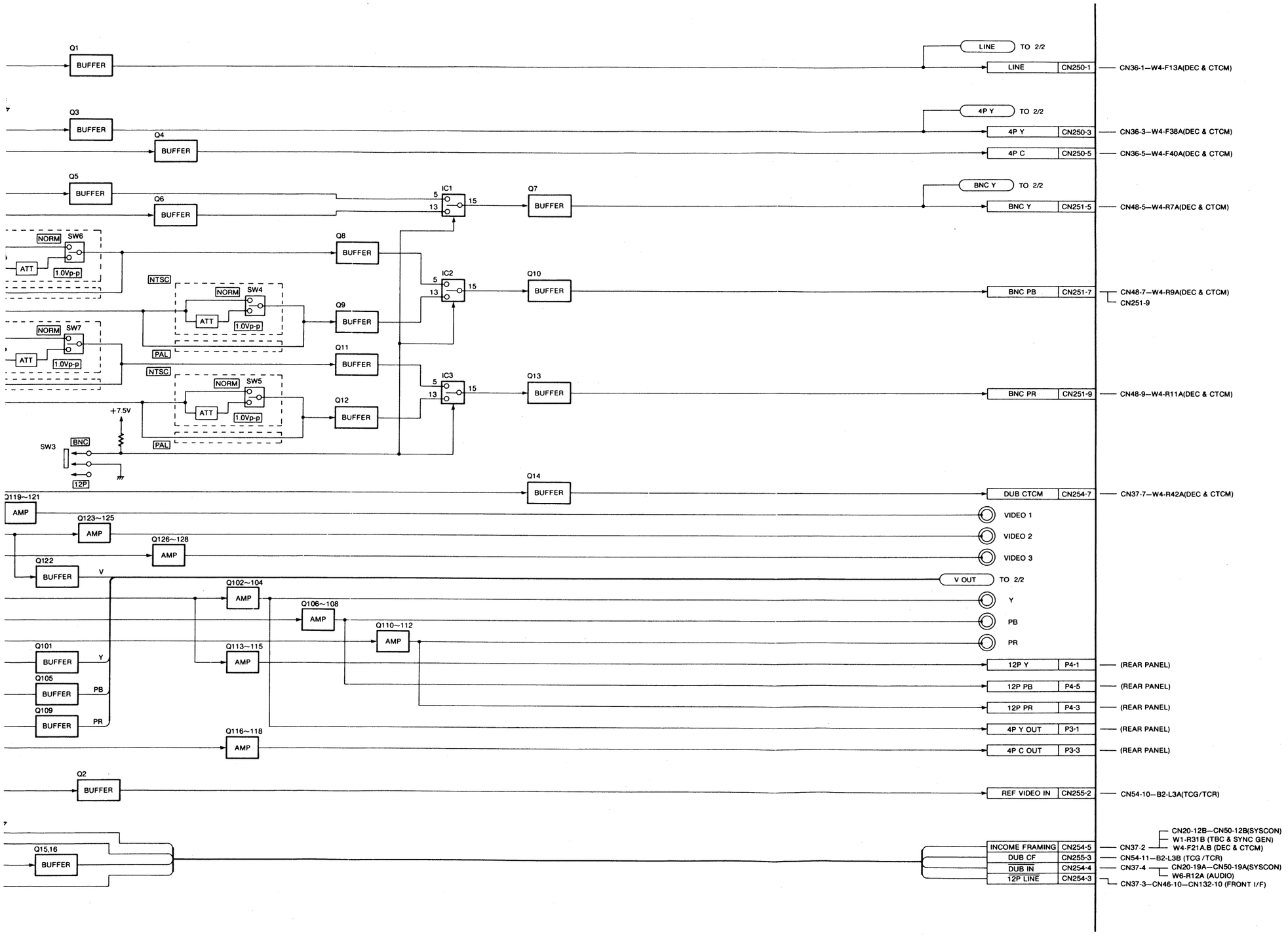

VIDEO I/O BLOCK DIAGRAM 2/2[FOR AU-665]

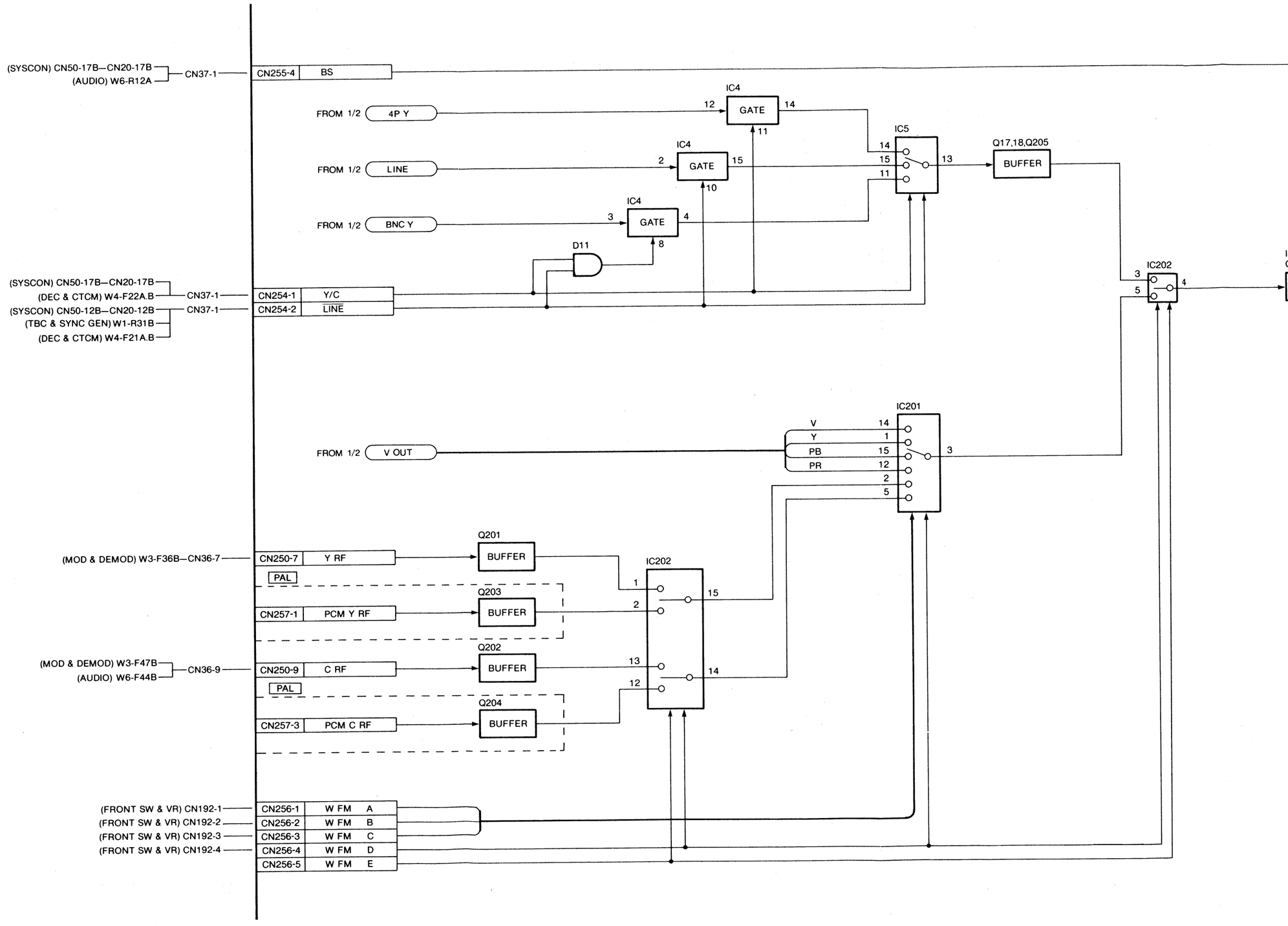

)EO I/O BLOCK DIAGRAM 2/2[FOR AU-665]

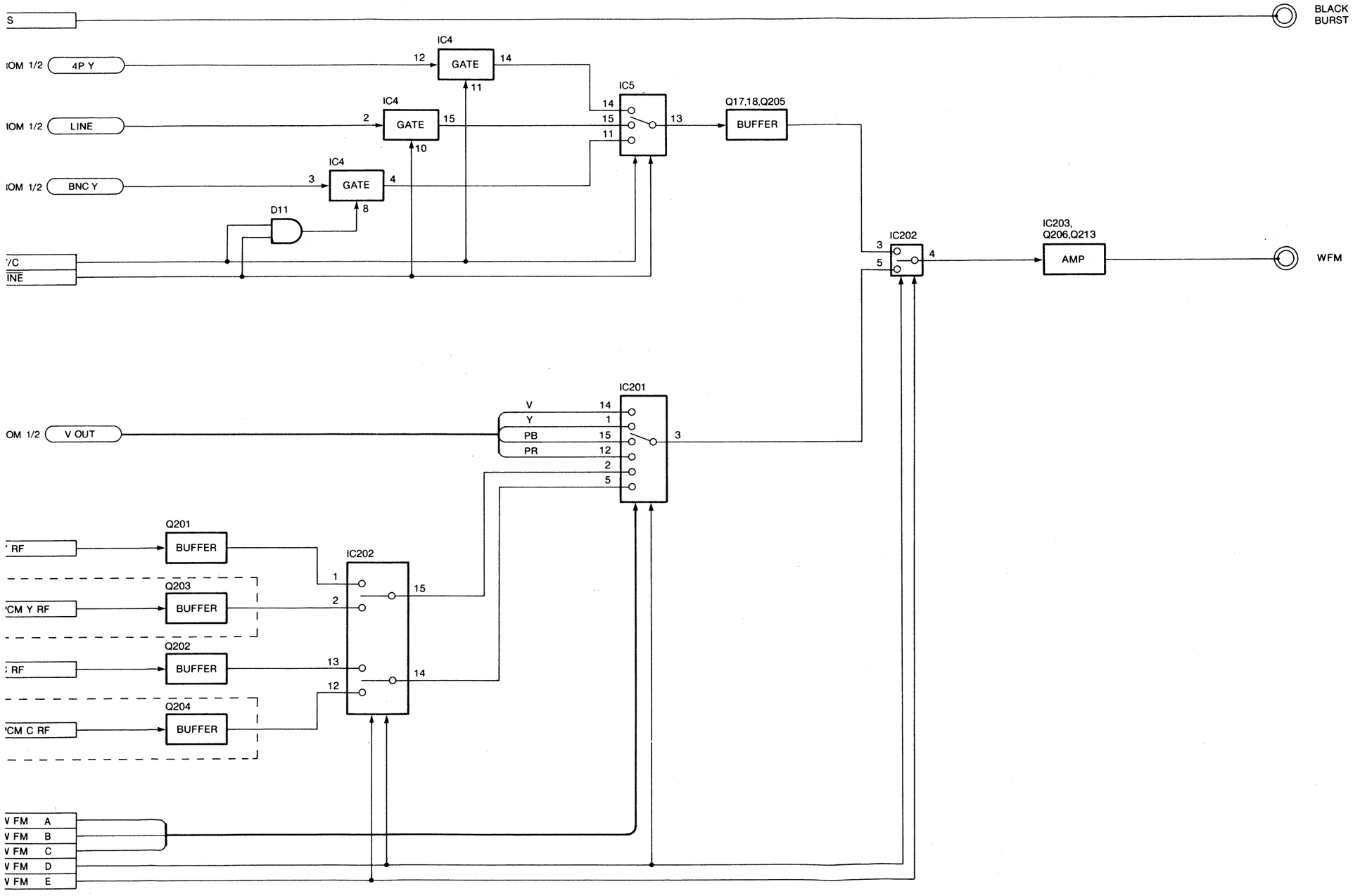

VIDEO I/O BLOCK DIAGRAM 1/2[FOR AU-65,AU-63,AU-62]

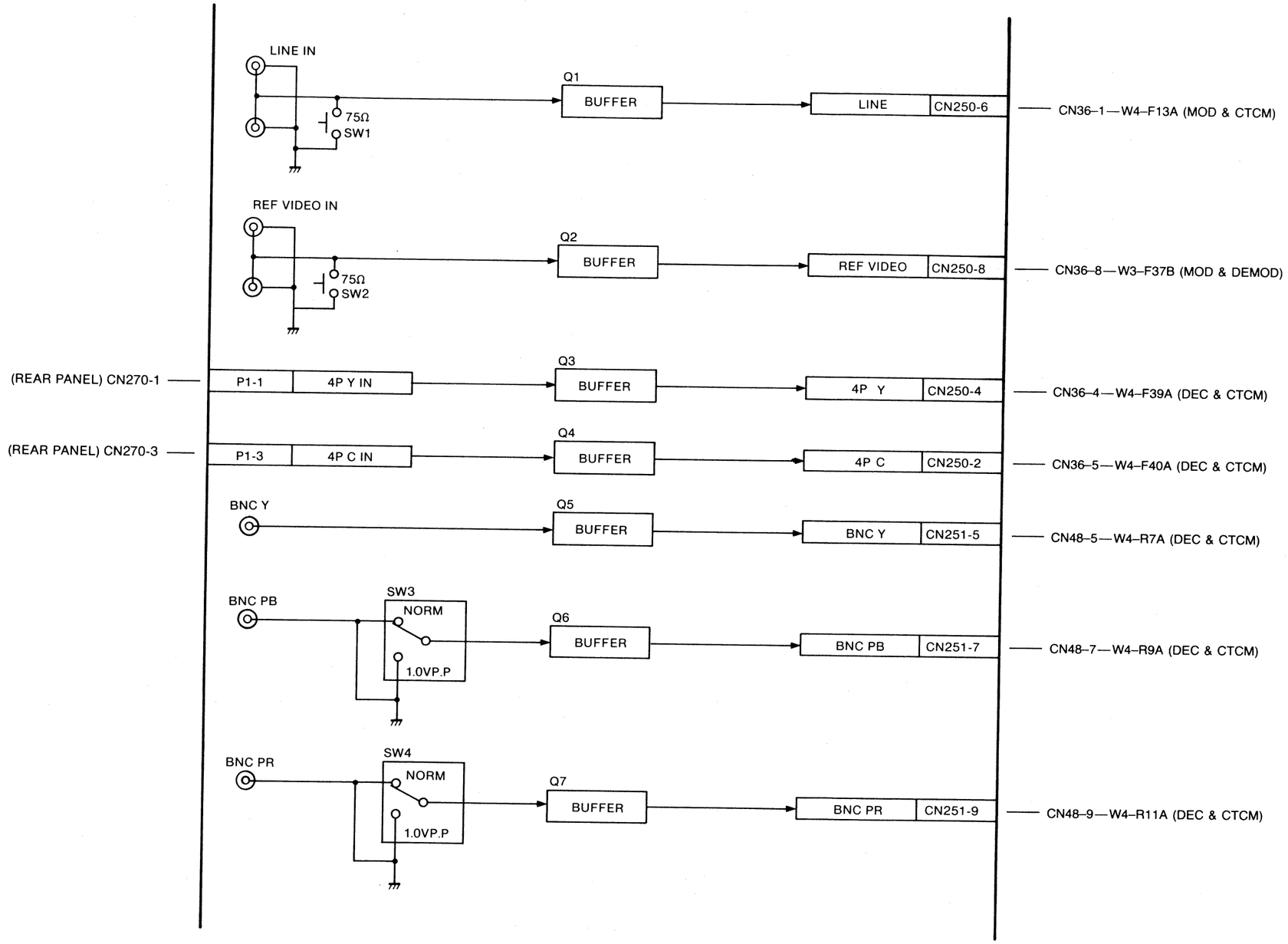

VIDEO I/O BLOCK

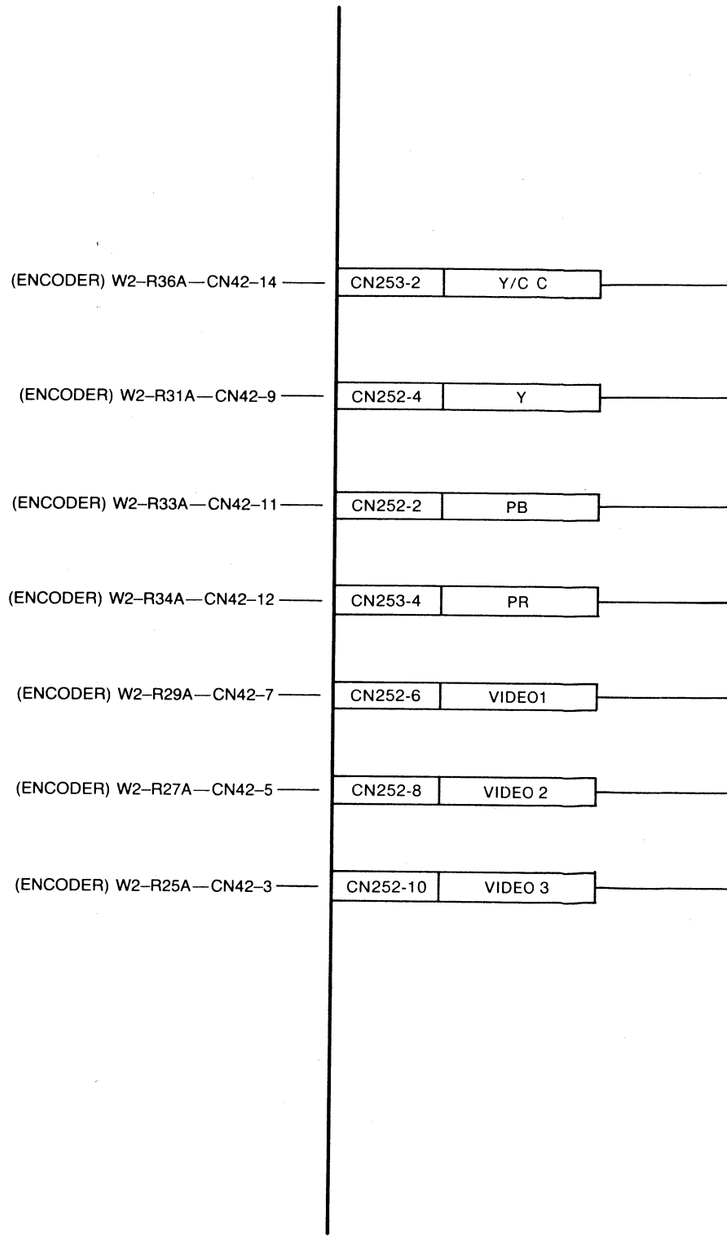

U-65,AU-63,AU-62]

VIDEO I/O BLOCK DIAGRAM 2/2[FOR AU-65,AU-63,AU-62]

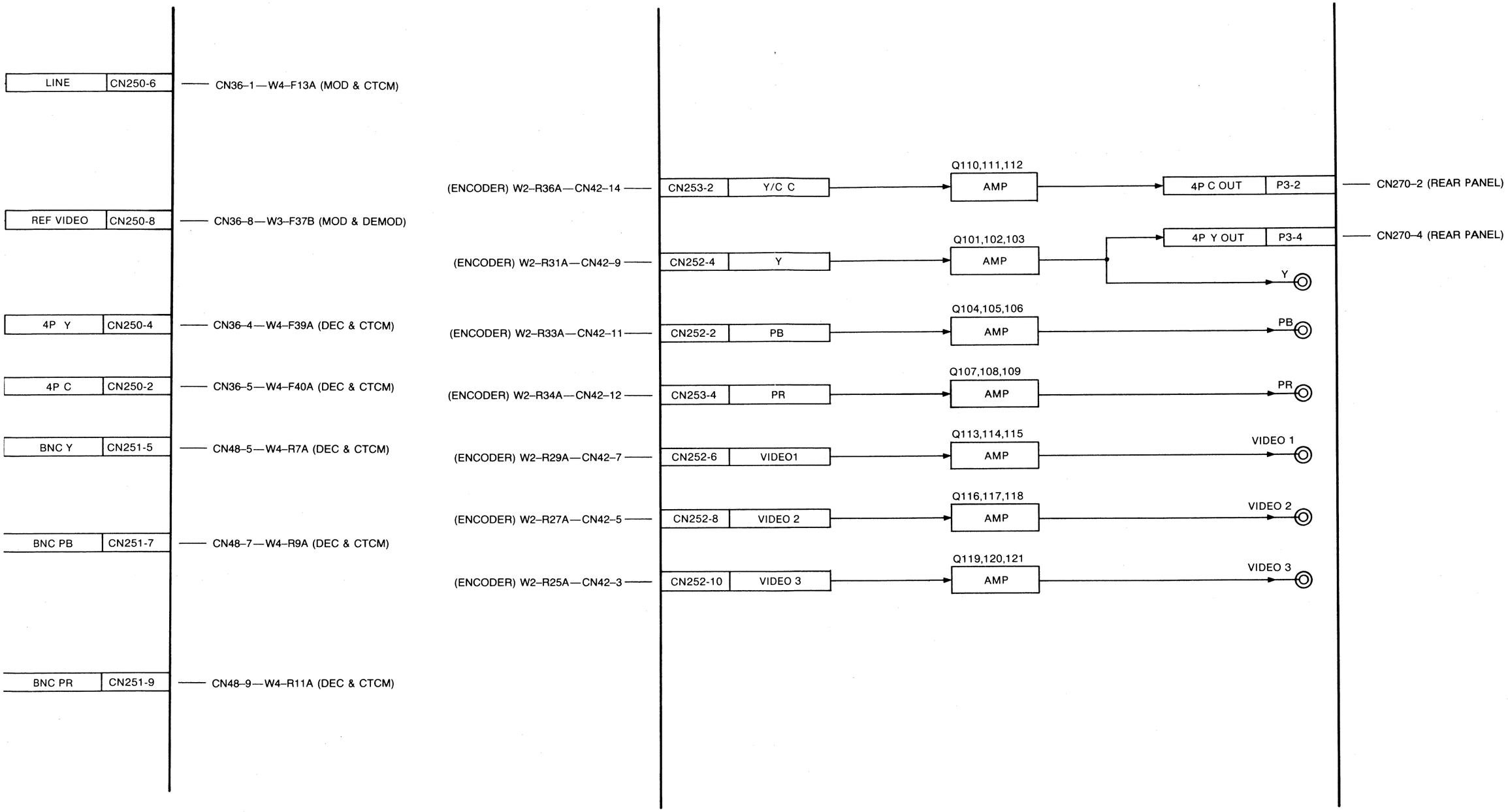

CN NO. INFORMATION

CN/P NO.	NAME	LOCATION NO.
CN8	W.MOTHER	15
CN9	W.MOTHER	15
CN12	W.MOTHER	15
CN13	W.MOTHER	15
CN14	W.MOTHER	15
CN15	W.MOTHER	15
CN17	W.MOTHER	15
CN20	W.MOTHER	2
CN21	W.MOTHER	2
CN22	W.MOTHER	24
CN23	W.MOTHER	2
CN24	W.MOTHER	2
CN25	W.MOTHER	24
CN26	W.MOTHER	2
CN28	W.MOTHER	24
CN30	W.MOTHER	2
CN31	W.MOTHER	15
CN34	W.MOTHER	2
CN35	W.MOTHER	15
CN36	W.MOTHER	24
CN37	W.MOTHER	24
CN39	W.MOTHER	15
CN40	W.MOTHER	2
CN41	W.MOTHER	2
CN42	W.MOTHER	24
CN46	W.MOTHER	2
CN48	W.MOTHER	24
CN49	W.MOTHER	24
CN50	B.MOTHER	1
CN51	B.MOTHER	1
CN52	B.MOTHER	1
CN53	B.MOTHER	22
CN54	B.MOTHER	22
CN55	B.MOTHER	14
CN56	B.MOTHER	1
CN57	B.MOTHER	14
CN58	B.MOTHER	1
CN59	B.MOTHER	1
CN60	B.MOTHER	1
CN81	RA & HA & RE	18
CN82	RA & HA & RE	18

CN/P NO.	NAME	LOCATION NO.
CN83	RA & HA & RE	18
CN84	RA & HA & RE	18
CN85	RA & HA & RE	18
CN86	RA & HA & RE	18
CN87	RA & HA & RE	18
CN110	MECHA INTERFACE	21
CN111	MECHA INTERFACE	21
CN112	MECHA INTERFACE	21
CN113	MECHA INTERFACE	21
CN114	MECHA INTERFACE	21
CN115	MECHA INTERFACE	21
CN116	MECHA INTERFACE	21
CN117	MECHA INTERFACE	21
CN118	MECHA INTERFACE	21
CN119	MECHA INTERFACE	21
CN120	MECHA INTERFACE	21
CN121	MECHA INTERFACE	21
CN130	FRONT INTERFACE	3
CN131	FRONT INTERFACE	3
CN132	FRONT INTERFACE	3
CN133	FRONT INTERFACE	3
CN134	FRONT INTERFACE	3
CN135	FRONT INTERFACE	3
CN136	FRONT INTERFACE	3
CN137	FRONT INTERFACE	3
CN138	FRONT INTERFACE	3
CN139	FRONT INTERFACE	3
CN140	FRONT INTERFACE	3
CN160	AUDIO VR	7
CN161	AUDIO VR	7
CN162	AUDIO VR	7
CN163	AUDIO VR	7
CN164	AUDIO VR	7
CN165	AUDIO VR	7
CN166	AUDIO VR	7
CN167	AUDIO VR	7
CN168	AUDIO VR	7
CN180	FRONT MODE SELECT	8
CN181	FRONT MODE SELECT	8
CN190	FRONT SW & VR	4
CN191	FRONT SW & VR	23

CN/P NO.	NAME	LOCATION NO.
CN192	FRONT SW & VR	23
CN193	FRONT SW & VR	23
CN200	AUDIO I/O	26
CN201	AUDIO I/O	26
CN202	AUDIO I/O	26
CN203	AUDIO I/O	12
CN204	AUDIO I/O	12
CN205	AUDIO I/O	26
CN206	AUDIO I/O	26
CN207	AUDIO I/O	26
CN208	AUDIO I/O	26
CN211	AUDIO I/O	26
CN212	AUDIO I/O	26
CN213	AUDIO I/O	26
CN215	AUDIO I/O	26
CN240	AUDIO I/O	26
CN242	AUDIO I/O	26
CN250	VIDEO I/O	29
CN251	VIDEO I/O	29
CN252	VIDEO I/O	29
CN253	VIDEO I/O	29
CN254	VIDEO I/O	29
CN255	VIDEO I/O	29
CN256	VIDEO I/O	29
CN257	VIDEO I/O	29
CN261	AUDIO INPUT SW	27
CN262	AUDIO INPUT SW	27
CN270	REAR PANEL	30
CN280	REAR PANEL	30
CN302	W.MOTHER	15
CN330	AT HA	19
CN331	AT HA	19
CN332	AT HA	19
CN350	AT POWER	16
CN601	W.MOTHER	24
CN602	W.MOTHER	24

CN/P NO.	NAME	LOCATION NO.
P0	DRUM	17
P01	DRUM	17
P1	VIDEO I/O	29
P2	VIDEO I/O	29
P3	VIDEO I/O	29
P4	VIDEO I/O	29
P10	AT POWER	16
P100	METER LAMP	11
P101	W.MOTHER	15
P109	HEAD PHONE	13
P112	FRONT UP PANEL	5
P113	FRONT UP PANEL	5
P115	FRONT UP PANEL	5
P128	VIDEO VR	10
P150	FRONT INTERFACE	3
P153	FRONT MODE SELECT	8
P155	FRONT MODE SELECT	8
P301	W.MOTHER	15
P405	MECHA INTERFACE	21
P406	CARRIAGE	20
P431	MECHA INTERFACE	21
P432	MECHA INTERFACE	21
P551	W.MOTHER	15
P553	W.MOTHER	15
P61002	MECHA INTERFACE	21
P61003	MECHA INTERFACE	21
P61006	MECHA INTERFACE	21
P61007	MECHA INTERFACE	21
P61008	MECHA INTERFACE	21
P61012	DRUM	17
P61013	DRUM	17
P61017	MECHA INTERFACE	21
P61020	MECHA INTERFACE	21
P61021	MECHA INTERFACE	21
P61022	MECHA INTERFACE	21
P61025	MECHA INTERFACE	21
P61027	MECHA INTERFACE	21
P61032	MECHA INTERFACE	21
P61033	MECHA INTERFACE	21

CN/P NO.	NAME	LOCATION NO.
POWER 1	W.MOTHER	24
POWER 2	W.MOTHER	24
POWER 10	B.MOTHER	22
POWER 20	POWER FILTER	28
POWER 21	POWER FILTER	28
POWER 22	POWER FILTER	28

CN/P NO.	NAME	LOCATION NO.
CP1	POWER BOX	25
CP51	POWER BOX	25
CP52	POWER BOX	25
CP53	POWER BOX	25

CN : CONNECTOR
P : PLUG
LOCATION NO. :
REFERENCE NO OF P.C.BOARD (REFER TO THE INTERCONNECTION SCHEMATIC DIAGRAM)

5-2-1

INTERCONNECTION 1/3

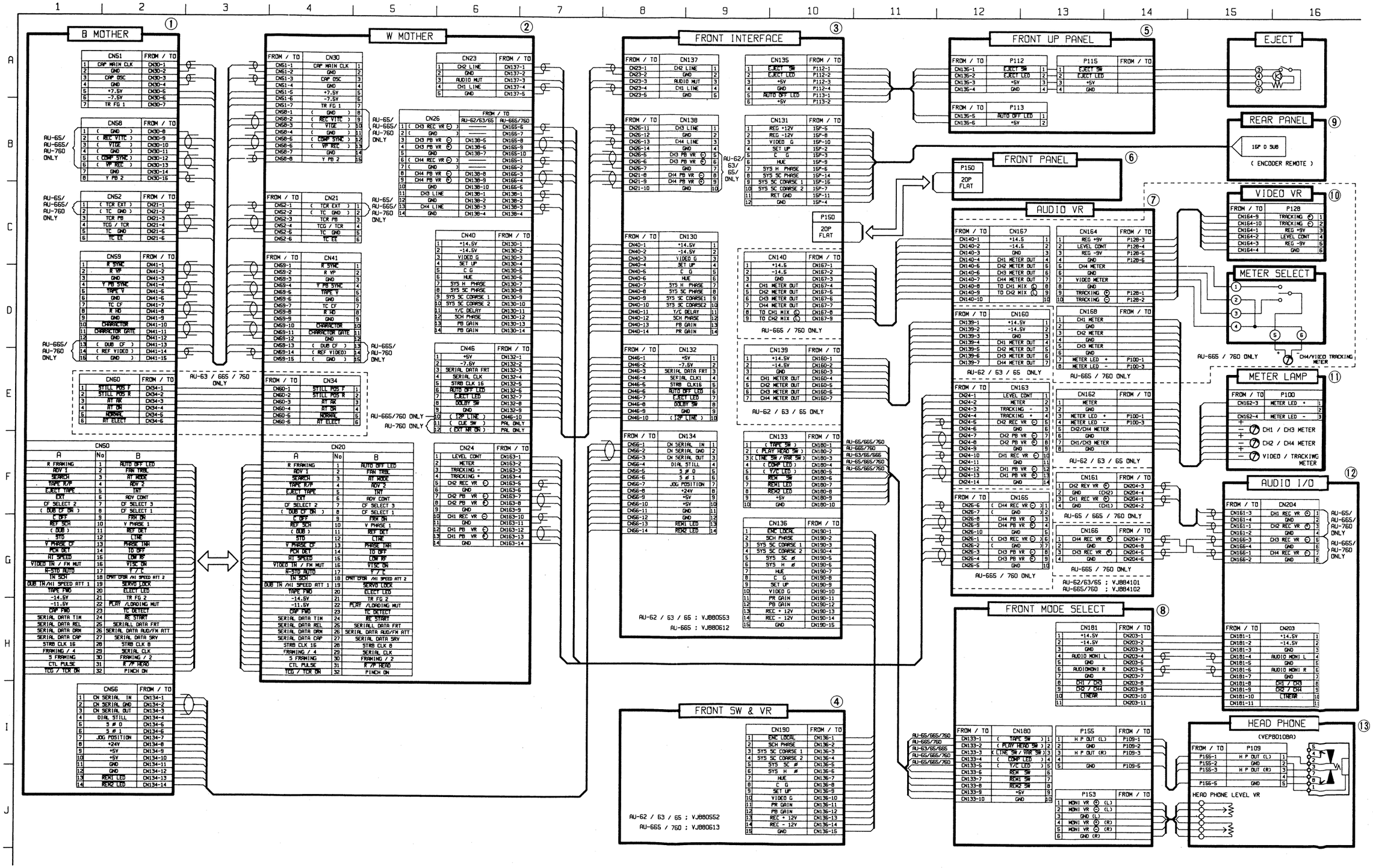

REVERSE SIDE **CN NO. LOCATION**

5-2-2

INTERCONNECTION 2/3

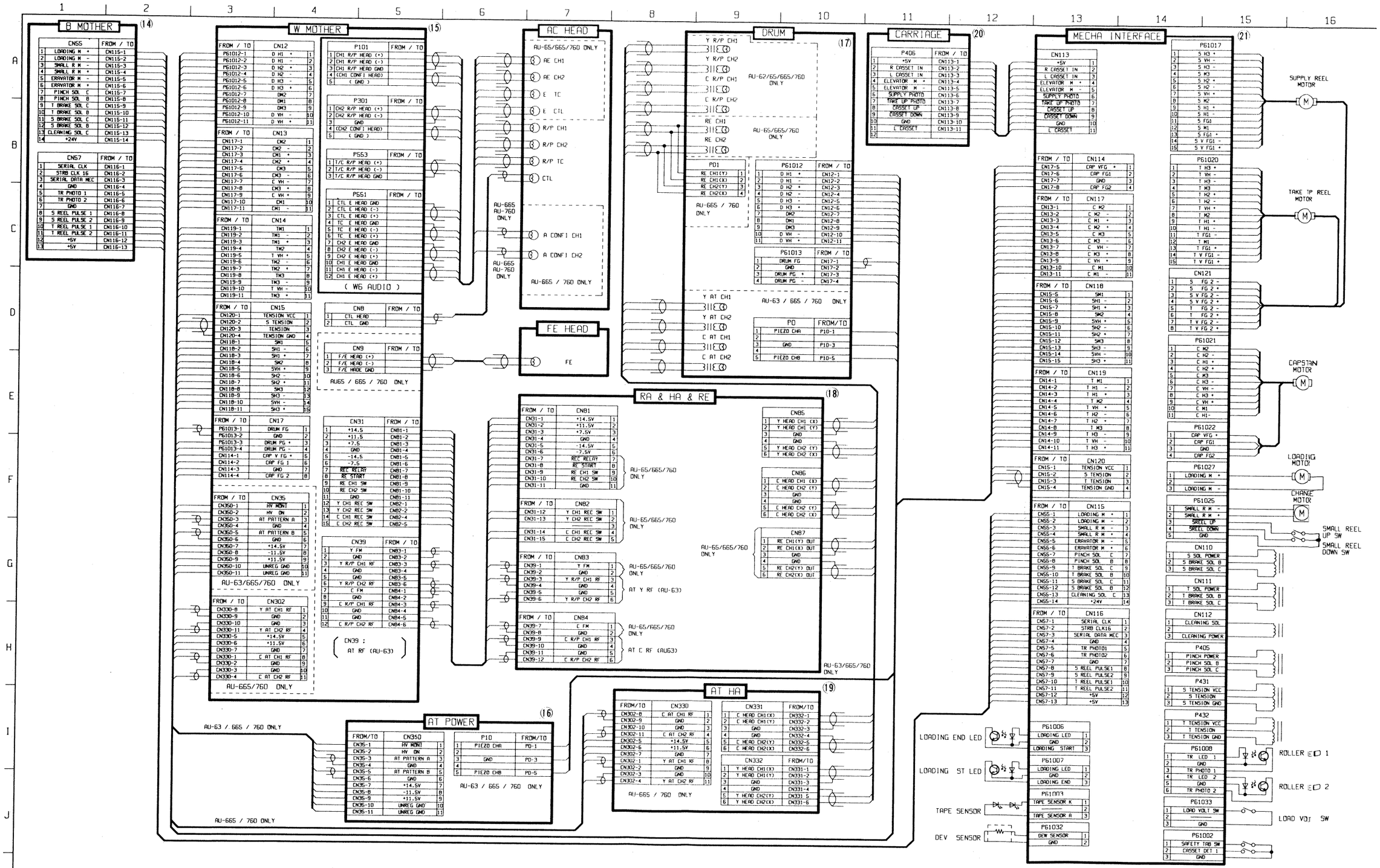

INTERCONNECTION 3/3

SUPPLY REEL MOTOR

TAKE TP REEL MOTOR

CAPSTAN MOTOR

LOADING MOTOR

CHANGE MOTOR

SMALL REEL UP SW

SMALL REEL DOWN SW

ROLLER LED 1

ROLLER LED 2

LOAD VOLT SW

B MOTHER (22)

POWER 1O	FROM / TO
1 +5V	CPS1-1
2 +11.5V	CPS1-2
3 +14.5V	CPS1-3
4 GND	CPS1-4
5 +24V	CPS1-5
6 UNREG GND	CPS1-6

CN54	FROM / TO
1 GND	CN280-1
2 RECEIVE B	CN280-2
3 TRANSMIT B	CN280-3
4 GND	CN280-4
5 RESEIVE A	CN280-5
6 TRANSMIT A	CN280-6
7 SPARE1	CN280-7
8 SPARE2	CN280-8
9 GND	CN255-1
10 REF VIDEO IN	CN255-2
11 DUB CF	CN255-3
12 GND	CN255-5
13 BS	CN255-4

AU-665/760 ONLY

CN53 A	No	B
(CAP OVERRIDE)	1	CTL PULSE
GND	2	STRB CLK16
SERIAL CLK	3	SERIAL DATA SO IN
SERIAL DATA SO OUT	4	SEARCH 2
SEARCH 1	5	JOG PLS
EJECT SW CMND	6	START MARK
SEARCH Ø	7	SERVO LOCK LAMP
STANBY ON STATUS	8	CASSETT IN
STANBY ON CMND	9	PREROLL CMND
LOCAL EN	10	+11.5V
RTS	11	RXD
+5V	12	TXD
	13	GND

(SOP OPTION)
AU-665 / 760 WITH

FRONT SW & VR (23)

CN191	FROM / TO
1 SYNC G	CN49-1
2 +5V	CN49-2
3 BURST G	CN49-3

CN192	FROM / TO
1 WFM A	CN256-1
2 WFM B	CN256-2
3 WFM C	CN256-3
4 WFM D	CN256-4
5	

CN193 26P FLAT

AU-665 / 760 ONLY

FRONT UP PANEL

POWER SW

POWER20-1
POWER20-4
POWER21-4
POWER21-1

W MOTHER (24)

FROM / TO	POWER1	
CPS2-1	+14.5V	1
CPS2-2	+11.5V	2
CPS2-3	+5V	3
CPS2-4	+5V	4
CPS2-5	GND	5
CPS2-6	GND	6

FROM / TO	POWER2	
CPS3-1	GND	1
CPS3-2	GND	2
CPS3-3	+7.5V	3
CPS3-4	-7.5V	4
CPS3-5	-11.5V	5
CPS3-6	-14.5V	6
CPS3-7	UNREG GND	7
CPS3-8	+24V	8

AU-65/665/760/ONLY

CN22	FROM / TO
1 (EXT TC IN)	CN208-1
2 (TC GND)	CN208-2
3 EXT TC OUT	CN202-1
4 TC GND	CN202-2
5 FAN TRBL	CN202-3

CN25	FROM / TO
1 -14.5V	CN200-1
2 UNREG GND	CN200-2
3 +24V	CN200-3
4 CH2 LINE	CN200-4
5 GND	CN200-5
6 AUDIO MUT	CN200-6
7 CH1 LINE	CN200-7
8 GND	CN200-8
9 +14.5V	CN200-9
10 GND	CN200-10

CN28	FROM / TO
1 CH3 LINE	CN201-1
2 GND	CN201-2
3 CH4 LINE	CN201-3
4 GND	CN202-4

CN36	FROM / TO AU-62/63/65	AU-665/760
1 (LINE)	CN250-6	CN250-1
2 (GND)	CN250-5	CN250-2
3 (4P Y)	CN250-4	CN250-3
4 (GND)	CN250-3	CN250-4
5 (4P C)	CN250-2	CN250-5
6 (GND)	CN250-1	CN250-6
7 (Y RF)	——	CN250-7
8 (GND)	——	CN250-8
9 (C RF)	——	CN250-9
10 (GND)	——	CN250-10
11 (REF VIDEO)	CN250-8	
12 (GND)	CN250-7	

AU-65/665/760 ONLY
AU-665/760 ONLY
AU-62/63/65 ONLY

CN42	FROM / TO AU-62/63/65	AU-665/760
1 Y/C C	CN253-2	CN253-1
2 GND	CN253-1	CN253-2
3 VIDEO 3	CN252-10	CN252-1
4 GND	CN252-9	CN252-2
5 VIDEO 2	CN252-8	CN252-3
6 GND	CN252-7	CN252-4
7 VIDEO 1	CN252-6	CN252-5
8 GND	CN252-5	CN252-6
9 Y	CN252-4	CN252-7
10 GND	CN252-3	CN252-8
11 PB	CN252-2	CN252-9
12 GND	CN252-1	CN252-10
13 PR	CN253-4	CN252-11
14 GND	CN253-3	CN252-12
15 +11.5V	CN253-5	CN253-3

AU-665 / 760 ONLY

FROM / TO	CN49	
CN191-1	SYNC G	1
CN191-2	+5V	2
CN191-3	BURST G	3

CN601 26P FLAT

CN602 26P FLAT

FROM / TO	CN37	
CN254-1	Y/C	1
CN254-2	CTRL	2
CN254-3	12P CTRL	3
CN254-4	DUB IN	4
CN254-5	INCOME FRAMING	5
CN254-6	GND	6
CN254-7	DUB CTCM	7

CN48	FROM / TO
1 +7.5V	CN261-1
2 -7.5V	CN261-2
3 -11.5V	CN261-3
4 GND	CN261-4
5 BNC Y	CN261-5
6 GND	CN261-6
7 BNC PB	CN261-7
8 GND	CN261-8
9 BNC PR	CN261-9
10 GND	CN261-10

POWER BOX (25)

FROM / TO	CPS1	
POWER1O-1	+5V	1
POWER1O-2	+11.5V	2
POWER1O-3	+14.5V	3
POWER1O-4	GND	4
POWER1O-5	+24V	5
POWER1O-6	UNREG GND	6
		7

FROM / TO	CPS2	
POWER1-1	+14.5V	1
POWER1-2	+11.5V	2
POWER1-3	+5V	3
POWER1-4	+5V	4
POWER1-5	GND	5
POWER1-6	GND	6
POWER1-7	NC	7

FROM / TO	CPS3	
POWER2-1	GND	1
POWER2-2	GND	2
POWER2-3	+7.5V	3
POWER2-4	-7.5V	4
POWER2-5	-11.5V	5
POWER2-6	-14.5V	6
POWER2-7	UNREG GND	7
POWER2-8	+24V	8

CP1	FROM / TO
1 AC (C)	POWER22-1
2	
3	
4 AC (H)	POWER22-4

AUDIO I/O (26)

FROM / TO	CN202	
CN22-3	EXT TC OUT	1
CN22-4	TC GND	2
CN22-5	FAN TRBL	3

AU-65 / 665 / 760 ONLY

FROM / TO	CN208	
CN22-1	EXT TC IN	1
CN22-2	TC GND	2
		3

AU-65 / 665 / 760 ONLY

FROM / TO	CN200	
CN25-1	-14.5V	1
CN25-2	UNREG GND	2
CN25-3	+24V	3
CN25-4	CH2 LINE	4
CN25-5	GND	5
CN25-6	AUDIO MUT	6
CN25-7	CH1 LINE	7
CN25-8	GND	8
CN25-9	+14.5V	9
CN25-10	GND	10

FROM / TO	CN201	
CN28-1	CH3 LINE	1
CN28-2	GND	2
CN28-3	CH4 LINE	3
CN28-4	GND	4

FROM / TO	CN205	
	+24V	1
		2
	UNREG GND	3

FROM / TO	CN206	
	+24V	1
		2
	UNREG GND	3

CN215	FROM / TO
1 GND	
2 TC IN (H)	
3 TC IN (C)	

AU-65 / 665 / 760 ONLY

CN211	FROM / TO
1 GND	
2 TC OUT (H)	
3 TC OUT (C)	

CN207	FROM / TO
1 GND	
2 CH1 LINE OUT(H)	
3 CH1 LINE OUT(C)	
4 GND	
5 CH2 LINE OUT(H)	
6 CH2 LINE OUT(C)	
7 GND	
8 CH3 LINE OUT(H)	
9 CH3 LINE OUT(C)	
10 GND	
11 CH4 LINE OUT(H)	
12 CH4 LINE OUT(C)	

CN212	FROM / TO
1 GND	
2 MONI OUT MIX (H)	
3 MONI OUT MIX (C)	

CN242	FROM / TO
1 GND	
2 MONI OUT L (H)	
3 MONI OUT L (C)	
4 GND	
5 MONI OUT R (H)	
6 MONI OUT R (C)	

AU-665/760 ONLY

AU-665/760 ONLY

CN213	FROM / TO AU-65	AU-665/760
GND	DIRECT	CN261-10
CH1/(CH3)LINE IN(H)	DIRECT	CN261-11
CH1/(CH3)LINE IN(C)	DIRECT	CN261-12
GND	DIRECT	CN261-7
CH2/(CH4)LINE IN(H)	DIRECT	CN261-8
CH2/(CH4)LINE IN(C)	DIRECT	CN261-9

AU-65 ONLY

CN240	FROM / TO
1 GND	CN261-1
2 CH3 LINE IN (H)	CN261-2
3 CH3 LINE IN (C)	CN261-3
4 GND	CN261-4
5 CH4 LINE IN (H)	CN261-6
6 CH4 LINE IN (C)	CN261-6

AU-665 / 760 ONLY

AUDIO INPUT SW (27)

FROM / TO	CN261	
CN240-1	GND	1
CN240-2	CH3 LINE IN (H)	2
CN240-3	CH3 LINE IN (C)	3
CN240-4	GND	4
CN240-5	CH4 LINE IN (H)	5
CN240-6	CH4 LINE IN (C)	6
CN213-4	GND	7
CN213-5	CH2 LINE IN(H)	8
CN213-6	CH2 LINE IN(C)	9
CN213-1	GND	10
CN213-2	CH1 LINE IN(H)	11
CN213-3	CH1 LINE IN(C)	12

CN262	FROM / TO
1 GND	DIRECT
2 CH1 LINE IN (H)	DIRECT
3 CH1 LINE IN (C)	DIRECT
4 GND	DIRECT
5 CH2 LINE IN (H)	DIRECT
6 CH2 LINE IN (C)	DIRECT
7 GND	DIRECT
8 CH3 LINE IN (H)	DIRECT
9 CH3 LINE IN (C)	DIRECT
10 GND	DIRECT
11 CH4 LINE IN (H)	DIRECT
12 CH4 LINE IN (C)	DIRECT

AU-665 / 760 ONLY

POWER FILTER (28)

HUSE 12SV6.3A

FROM POWER BOX

FROM / TO	POWER22	
CP1-1	AC (C)	1
		2
		3
CP1-4	AC (H)	4

POWER21	FROM / TO
1 AC FILTER (H)	POWER SW
2	
3	
4 AC FILTER (C)	POWER SW

POWER20	FROM / TO
1 AC SW (H)	POWER SW
2	
3	
4 AC SW (C)	POWER SW

VIDEO I/O (29)

FROM / TO	CN250	
CN36-6	(GND)	1
CN36-5	(4P C)	2
CN36-4	(GND)	3
CN36-3	(4P Y)	4
CN36-2	(GND)	5
CN36-1	(LINE)	6
CN36-7	(GND)	7
CN36-8	(REF VIDEO)	8

AU-62 / 63 / 65 ONLY

FROM / TO	CN250	
CN36-1	LINE	1
CN36-2	GND	2
CN36-3	4P Y	3
CN36-4	GND	4
CN36-5	4P C	5
CN36-6	GND	6
CN36-7	Y RF	7
CN36-8	GND	8
CN36-9	C RF	9
CN36-10	GND	10

AU-665 / 760 ONLY

FROM / TO	CN251	
CN48-1	+7.5V	1
CN48-2	-7.5V	2
CN48-3	-11.5V	3
CN48-4	GND	4
CN48-5	BNC Y	5
CN48-6	GND	6
CN48-7	BNC PB	7
CN48-8	GND	8
CN48-9	BNC PR	9
CN48-10	GND	10

FROM / TO	CN252	
CN42-12	GND	1
CN42-11	PB	2
CN42-10	GND	3
CN42-9	Y	4
CN42-8	GND	5
CN42-7	VIDEO 1	6
CN42-6	GND	7
CN42-5	VIDEO 2	8
CN42-4	GND	9
CN42-3	VIDEO 3	10

AU-62 / 63 / 65 ONLY

FROM / TO	CN252	
CN42-3	VIDEO 3	1
CN42-4	GND	2
CN42-5	VIDEO 2	3
CN42-6	GND	4
CN42-7	VIDEO 1	5
CN42-8	GND	6
CN42-9	Y	7
CN42-10	GND	8
CN42-11	PB	9
CN42-12	GND	10
CN42-13	PR	11
CN42-14	GND	12

AU-665 / 760 ONLY

FROM / TO	CN253	
CN42-2	GND	1
CN42-1	Y/C C	2
CN42-14	GND	3
CN42-13	PR	4
CN42-15	+11.5V	5

AU-62 / 63 / 65 ONLY

FROM / TO	CN253	
CN42-1	Y/C C	1
CN42-2	GND	2
CN42-15	+11.5V	3

FROM / TO	CN254	
CN37-1	Y/C	1
CN37-2	CTRL	2
CN37-3	12P CTRL	3
CN37-4	DUB IN	4
CN37-5	INCOME FRAMING	5
CN37-6	GND	6
CN37-7	DUB CTCM	7
		8

FROM / TO	CN255	
CN54-9	GND	1
CN54-10	REF VIDEO IN	2
CN54-11	DUB CF	3
CN54-13	BS	4
CN54-12	GND	5
		6

FROM / TO	CN256	
CN192-1	WFM A	1
CN192-2	WFM B	2
CN192-3	WFM C	3
CN192-4	WFM D	4
		5
		6

AU-665 / 760 ONLY

AU-62 / 63 / 65 : VJB83097
AU-665 / 760 : VJB83104

P1	FROM / TO	
1 4P Y IN	CN270-1	
2 GND	CN270-2	
3 4P C IN	CN270-3	
4 GND	CN270-4	

AU-65 / 665 / 760 ONLY

P3	FROM / TO	
1 GND	CN270-4	
2 4P Y OUT	CN270-3	
3 GND	CN270-2	
4 4P C OUT	CN270-1	

AU-62 / 63 / 65 ONLY

P3	FROM / TO	
1 4P Y OUT	CN270-1	
2 GND	CN270-2	
3 4P C OUT	CN270-3	
4 GND	CN270-4	

AU-665 / 760 ONLY

P2	FROM / TO	
1 Y IN	12P IN - (1)	
2 GND	12P IN - (2)	
3 PR IN	12P IN - (3)	
4 GND	12P IN - (4)	
5 PB IN	12P IN - (5)	
6 GND	12P IN - (6)	
7 CTCH IN	12P IN - (7)	
8 GND	12P IN - (8)	
9 INCOME FRAMING	12P IN - (9)	
10 DUB CF IN	12P IN - (0)	
11 DUB IN	12P IN - (11)	
12 12P LINE	12P IN - (12)	

P4	FROM / TO	
1 12P Y	12P OUT-(1)	
2 GND	12P OUT-(2)	
3 12P PR	12P OUT-(3)	
4 GND	12P OUT-(4)	
5 12P PB	12P OUT-(5)	
6 GND	12P OUT-(6)	

AU665 / 760 ONLY

CN257	
1 PCM Y RF	
2 GND	
3 PCM C RF	
4 GND	
5 Y DEM	
6 GND	
7 C DEM	
8 GND	

AU-760 ONLY

REAR PANEL

Y /C IN

FROM / TO	CN270	
P1-1	4P Y IN	1
P1-2	GND	2
P1-3	4P C IN	3
P1-4	GND	4

AU-65 / 665 / 760 ONLY

Y/C OUT

FROM / TO AU-62/63/65	AU-665/760	CN270
P3-4	P3-1	4P Y OUT
P3-3	P3-2	GND
P3-2	P3-3	4P C OUT
P3-1	P3-4	GND

COMPONENT / DUB IN

COMPONENT OUT

AU-665 / 760 ONLY

CN280	
CN54-1	GND 1
CN54-2	RECEIVE B 2
CN54-3	TRANSMIT B 3
CN54-4	GND 4
CN54-5	RECEIVE A 5
CN54-6	TRANSMIT A 6
CN54-7	SPARE 1 7
CN54-8	SPARE 2 8

(9P RFMOTO)

CN53 A	No	B
(CAP OVERRIDE)	1	CTL PULSE
GND	2	STRB CLK16
SERIAL CLK	3	SERIAL DATA SO IN
SERIAL DATA SO OUT	4	SEARCH 2
SEARCH 1	5	JOG PLS
EJECT SW CMND	6	START MARK
SEARCH Ø	7	SERVO LOCK LAMP
STANBY SW STATUS	8	CASSETT IN
STANBY ON CMND	9	PREROLL CMND
LOCAL EN	10	+11.5V
RTS	11	RXD
RTS	12	TXD
SV	13	GND

(SOP OPTION) AU-665 / WITH

2SP D SUB

(WFM REMOTE) AU-665 / ONLY

2SP D SUB

(DIGITAL OUT OPTION) AU-665 / ONLY

AC IN

W. MOTHER
SCHEMATIC DIAGRAM

TYPE \ MODEL	AU-665	AU-65	AU-63	AU-62
NTSC	VEP80548B	VEP80548A	VEP80548D	VEP80548C
PAL	VEP80548E	VEP80548A	VEP80548D	VEP80548C

W0 (W,MOTHER) SCHEMATIC DIAGRAM 1/4

FRONT

VJP1232T

CN23		FROM / TO		
1	CH2 LINE	W6-R35B		
2	GND	W6-R35A		
3	AUDIO MUT	W6-R36A		
4	CH1 LINE	W6-R44B		
5	GND	W6-R44A		

VJP1931T

CN24		FROM / TO			
1	LEVEL CONT	W4-F19A,B			
2	METER	W3-R30A,B			
3	TRACKING -	W6-R10A			
4	TRACKING +	W6-R17A			
5	(CH2 REC VR ⊖)	W6-R33B			AU-65/665/760 ONLY
6	(GND)	W6-R33A			AU-65/665/760 ONLY
7	CH2 PB VR ⊖	W6-R34B			
8	CH2 PB VR ⊙	W6-R34A			
9	GND	W6-R33A			
10	(CH1 REC VR ⊖)	W6-R42B			AU-65/665/760 ONLY
11	(GND)	W6-R42A			AU-65/665/760 ONLY
12	CH1 PB VR ⊖	W6-R43B			
13	CH1 PB VR ⊙	W6-R43A			
14	GND	W6-R42A			

VJP1931T

CN26		FROM / TO			
1	(CH3 REC VR ⊖)	W6-F34B			AU-665/760 ONLY
2	(GND)	W6-F34A			AU-665/760 ONLY
3	CH3 PB VR ⊖	W6-F35B			
4	CH3 PB VR ⊙	W6-F35A			
5	GND	W6-F34A			
6	(CH4 REC VR ⊖)	W6-F38B			AU-665/760 ONLY
7	(GND)	W6-F38A			AU-665/760 ONLY
8	CH4 PB VR ⊖	W6-F39B			
9	CH4 PB VR ⊙	W6-F39A			
10	GND	W6-F39A			
11	CH3 LINE	W6-F36B	CN20-1		
12	GND	W6-F36A	CN20-2		
13	CH4 LINE	W6-F40B	CN20-3		
14	GND	W6-F40A	CN20-4		

VJP1929T

CN40		FROM / TO		
1	+14.5V	W5-R46A		
2	-14.5V	W5-R5A,B		
3	VIDEO G	W1-R9A	W2-R9A	
4	SET UP	W2-R20B		
5	C G	W1-R10A	W2-R10A	
6	MUE	W2-R20A		
7	SYS H PHASE	W1-R36B		
8	SYS SC PHASE	W1-R36A		
9	SYS SC COARSE 1	W1-R37B		
10	SYS SC COARSE 2	W1-R36B		
11	Y/C DELAY	W1-F8B		
12	SCH PHASE	W1-R38B		
13	PB GAIN	W1-R11B		
14	PR GAIN	W1-R11A		

VJP1252T

CN46		FROM / TO			
1	+5V	W5-F29,B			
2	-7.5V	W5-R36,B			
3	SERIAL DATA FRT	CN20-26B			
4	SERIAL CLK	CN20-29B	W5-R9B		W6-F48A
5	STRB CLK 16	CN20-28A	W5-R10B		W6-F49A
6	AUTO OFF LED	CN20-1B			
7	EJECT LED	CN20-20B			
8	DOLBY SW	W6-R12B			
9	GND				
10	(I2P LINE)	CN37-3			AU-665/760 ONLY
11	(CUE SW)	CN402-5			AU-760 ONLY
12	(EXT NR ON)	W6-R38A			AU-760 ONLY

VJP1243T (AU-665/635 ONLY)

CN49		FROM / TO		
1	SYNC G	W2-R11A		
2	+5V			
3	BURST G	W2-R11B		

MECHA

VJP1229T

CN8		FROM / TO	
1	CTL HEAD	W5-R33B	
2	CTL GND	W5-R32B	W5-R34B

VJP1230T (AU-65/665/760 ONLY)

CN9		FROM / TO	
1	F/E HEAD ⊙	W6-R9A	
2	F/E HEAD ⊖	W6-R9B	
3	F/E HEAD GND	W6-R10A,B	

VJP1511T

CN12		FROM / TO		
1	D H1+	W5-F35A		
2	D H1-	W5-F36B		
3	D H2+	W5-F36A		
4	D H2-	W5-F36B		
5	D H3-	W5-F37A		
6	D H3+	W5-F37B		
7	D H2	W5-F38A,B		
8	D H1	W5-F39A,B		
9	D H3	W5-F40A,B		
10	D YH-	W5-F41A,B		
11	D YH+	W5-F42A,B		

VJP1511T

CN13		FROM / TO		
1	C H2	W5-F26A,B		
2	C H2-	W5-F27A		
3	C H1+	W5-F27B		
4	C H2+	W5-F29A		
5	C H3	W5-F28A,B		
6	C H3-	W5-F29B		
7	C YH-	W5-F30A,B		
8	C H3+	W5-F32A		
9	C YH+	W5-F31A,B		
10	C H1	W5-F33A,B		
11	C H1-	W5-F32B		

VJP1511T

CN14		FROM / TO		
1	T H1	W5-F17A,B		
2	T H1-	W5-F18A		
3	T H1+	W5-F18B		
4	T H2	W5-F19A,B		
5	T YH+	W5-F20A,B		
6	T H2-	W5-F21A		
7	T H2+	W5-F21B		
8	T H3	W5-F22A,B		
9	T H3-	W5-F24A		
10	T YH-	W5-F23A,B		
11	T H3+	W5-F24B		

VJP1932T

CN15		FROM / TO		
1	TENSION VCC	W5-F7A		
2	S TENSION	W5-F6A		
3	T TENSION	W5-F6B		
4	TENSION GND	W5-F7B		
5	S H1	W5-F9A,B		
6	S H1-	W5-F10A		
7	S H1+	W5-F10B		
8	S H2	W5-F11A,B		
9	S YH+	W5-F12A,B		
10	S H2-	W5-F13A		
11	S H2+	W5-F13B		
12	S H3	W5-F14A,B		
13	S H3-	W5-F15A		
14	S YH-	W5-F15A,B		
15	S H3+	W5-F16B		

VJP1235T

CN17		FROM / TO		
1	DRUM FG	W5-R26B		
2	GND	W5-R29B		
3	DRUM PG+	W5-R30B		
4	DRUM PG-	W5-R31B		
5	CAP Y FG+	W5-R30A		
6	CAP FG 1	W5-R31A		
7	GND	W5-R32A		
8	CAP FG 2	W5-R33A		

REAR

VJP1232T

CN22		FROM / TO			
1	(EXT TC IN)	W5-F10B			AU-65/665/760 ONLY
2	(TC GND)	W5-F11B			AU-65/665/760 ONLY
3	EXT TC OUT	W5-F10A			
4	TC GND	W5-F11A			
5	FAN TRBL	CN20-2B			

VJP1237T

CN25		FROM / TO		
1	-14.5V	W5-R5A,B		
2	UNREG GND	W5-R6A,B		
3	+24V	W5-R7A,B		
4	CH2 LINE	W6-R35B	CN23-1	
5	GND	W6-R35A	CN23-2	
6	AUDIO MUT	W6-R36A	CN23-3	
7	CH1 LINE	W6-R44B	CN23-4	
8	GND	W6-R44A	CN23-5	
9	+14.5V	W6-R46A,B	CN303-1	
10	GND	W6-R5OA,B	CN303-3	

VJP1231T

CN28		FROM / TO		
1	CH3 LINE	W6-F36B	CN26-11	
2	GND	W6-F36A	CN26-12	
3	CH4 LINE	W6-F40B	CN26-13	
4	GND	W6-F40A	CN26-14	

VJP1239T

CN36		FROM / TO			
1	(LINE)	W4-F13A			AU-65/665/760 ONLY
2	(GND)	W4-F12A			AU-65/665/760 ONLY
3	(4P Y)	W4-F38A			AU-65/665/760 ONLY
4	(GND)	W4-F39A			AU-65/665/760 ONLY
5	(4P C)	W4-F40A			AU-65/665/760 ONLY
6	(GND)	W4-F41A			AU-65/665/760 ONLY
7	(Y RF)	W3-F36B			AU-665/760 ONLY
8	(GND)	W3-F37B			AU-665/760 ONLY
9	(C RF)	W3-F47B	W6-F44B		AU-665/760 ONLY
10	(GND)	W3-F48B			AU-665/760 ONLY
11	(REF VIDEO)	W1-R45B	CN41-15		AU-65/63/62 ONLY
12	(GND)	W1-R44B	CN41-14		AU-65/63/62 ONLY

VJP1234T (AU-665 ONLY)

CN37		FROM / TO		
1	Y/C	W4-F22A,B	CN20-17B	
2	LINE	W4-F21A,B	CN20-12B	W1-R31B
3	I2P LINE	CN46-10		
4	DUB IN /H1 SPEED ATT 1	W6-R12A	CN20-19A	
5	INCOME FRAMING	W1-R10B		
6	GND	W4-R43A		
7	DUB CTCH	W4-R42A		

VJP1932T

CN42		FROM / TO		
1	Y/C C	W2-R23A		
2	GND	W2-R24A		
3	VIDEO 3	W2-R25A		
4	GND	W2-R26A		
5	VIDEO 2	W2-R27A		
6	GND	W2-R28A		
7	VIDEO 1	W2-R29A		
8	GND	W2-R30A		
9	Y	W2-R31A		
10	GND	W2-R32A		
11	PB	W2-R33A		
12	GND	W2-R34A		
13	PR	W2-R35A		
14	GND	W2-R36A		
15	+11.5V	W2-R46A		

VJP1237T

CN48		FROM / TO			
1	+7.5V	W4-R2A,B			
2	-7.5V	W4-R3A,B			
3	-11.5V	W4-R4A,B			
4	GND	W4-R5A,B			
5	(BNC Y)	W4-R7A			AU-65/665/760 ONLY
6	(GND)	W4-R8A			AU-65/665/760 ONLY
7	(BNC PB)	W4-R9A			AU-65/665/760 ONLY
8	(GND)	W4-R10A			AU-65/665/760 ONLY
9	(BNC PR)	W4-R11A			AU-65/665/760 ONLY
10	(GND)	W4-R12A			AU-65/665/760 ONLY

VJP1233T (PAL ONLY)

CN400		FROM / TO		
1	CH2 DECODE IN	W6-R29B		
2	GND	W6-R29A		
3	CH2 DECODE OUT	W6-R30B		
4	CH2 ENCODE IN	W6-R31B		
5	GND	W6-R31A		
6	CH2 ENCODE OUT	W6-R32B		

VJP1236T (PAL ONLY)

CN401		FROM / TO		
1	CH2 EE	W6-R36B		
2	CH1 EE	W6-R37B		
3	EXT NR OUT	W6-R37A		
4	CH1 DECODE IN	W6-R38B		
5	GND	W6-R39A		
6	CH1 DECODE OUT	W6-R39B		
7	CH1 ENCODE IN	W6-R40B		
8	GND	W6-R40A		
9	CH1 ENCODE OUT	W6-R41B		

VJP1232T (PAL ONLY)

CN402		FROM / TO		
1	CUE REC	W6-F7A		
2	CUE	W6-F7B		
3	+5V	W6-F2A,B		
4	GND	W6-F1A,B		
5	CUE SW	CN46-11		

VJP1231T (SPARE)

CN500		FROM / TO		
1	Y PB 1	W3-F7A,B	W2-F7A	
2	GND	W3-F9A,B	W2-F8A,B	CN30-14
3	C PB	W3-F10A,B	W2-F9A	
4	GND	W3-F11A,B	W2-F10A,B	

PCM

VJP1230T (PCM ONLY)

CN301		FROM / TO		
1	PCM H SW	W5-R25B		
2	PCM GATE	W5-R26B		
3	GND	W5-R29A		

VJP1230T

CN303		FROM / TO		
1	+14.5V	W6-R46A,B		
2	+11.5V	W6-R47A,B		
3	GND	W6-R5OA,B		

VJP1233T

CN304		FROM / TO		
1	C PCM AT RF	W3-F43B		
2	GND	W3-F44B		
3	Y PCM AT RF	W3-F49B		
4	GND	W3-F50B		
5	MD	W1-R18A		
6	GND	W1-R19A		

AT H.A

VJP1511T (AU-665/760 ONLY)

CN302		FROM / TO		
1	Y AT CH1 RF	W3-R10A,B		
2	GND	W3-R12A,B		
3	GND	W3-R12A,B		
4	Y AT CH2 RF	W3-R11A,B		
5	+14.5V	W4-W46A,B		
6	+11.5V	W4-R47A,B		
7	GND	W4-R5OA,B		
8	C AT CH1 RF	W3-R16A,B		
9	GND	W3-R18A,B		
10	GND	W3-R18A,B		
11	C AT CH2 RF	W3-R17A,B		

AT POWER

VJP1251T (AU-63/665/760 ONLY)

CN35		FROM / TO		
1	HV MONI	W5-R43A		
2	HV ON	W5-R43B		
3	AT PATTERN A	W5-R44A		
4	GND	W5-R45A		
5	AT PATTERN B	W5-R44B		
6	GND	W5-R45B		
7	+14.5V	W5-R46A		
8	-11.5V	W5-R4A,B		
9	+11.5V	W5-R47A,B		
10	UNREG GND	W5-R6A,B		
11	UNREG GND	W5-R6A,B		

RA.HA.RE

VJP1932T

CN31		FROM / TO		
1	+14.5V	W5-R46A	CN35-7	
2	+11.5V	W5-R47A	CN35-9	
3	+7.5V	W5-R2A,B	CN30-5	
4	GND	W5-R1A,B	CN30-4	
5	-14.5V	W5-R5A,B		
6	-7.5V	W5-R3A,B	CN30-6	
7	REC RELAY	W5-R19B	W6-F46A	
8	RE START	W5-R19A	CN20-24B	
9	RE CH1 SW	W5-R20A		
10	RE CH2 SW	W5-R20B		
11	GND			
12	Y CH1 REC SW	W5-R21A		
13	Y CH2 REC SW	W5-R22A		
14	C CH1 REC SW	W5-R21B		
15	C CH2 REC SW	W5-R22B		

VJP1239T

CN39		FROM / TO		
1	Y FM	W3-R33A,B		
2	GND	W3-R34A,B		
3	Y R/P CH1 RF	W3-R7A,B		
4	GND	W3-R9A,B		
5	GND	W3-R9A,B		
6	Y R/P CH2 RF	W3-R8A,B		
7	C FM	W3-R35A,B		
8	GND	W3-R35A,B		
9	C R/P CH1 RF	W3-R13A,B		
10	GND	W3-R15A,B		
11	GND	W3-R15A,B		
12	C R/P CH2 RF	W3-R14A,B		

VJP1233T (PCM ONLY)

CN300		FROM / TO		
1	Y CH1 PCM GATE	W5-R23B		
2	Y CH2 PCM GATE	W5-R24B		
3	GND	W5-R29B		
4	C CH1 PCM GATE	W5-R23B		
5	C CH2 PCM GATE	W5-R24B		
6	GND	W5-R29A		

POWER BOX

VJP1709

POWER1		FROM / TO		
1	+14.5V			
2	+11.5V			
3	+5V			
4	+5V			
5	GND			
6	GND			

VJP1627

POWER2		FROM / TO		
1	GND			
2	GND			
3	+7.5V			
4	-7.5V			
5	-11.5V			
6	-14.5V			
7	UNREG GND			
8	+24V			

+5V — C1 16V220 — C2 16V220

REVERSE SIDE **INTERCONNECTION SCHEMATIC DIAGRAM**

W0 (W,MOTHER) SCHEMATIC DIAGRAM 2/4

B MOTHWER

VJP1232T

CN21		FROM / TO			
1	(TCR EXT)	W6-F8B			AU-GS/66S/76O ONLY
2	(TC GND)	W6-F9A			AU-GS/66S/76O ONLY
3	TCR PB	W6-F8A			
4	TCG/TCR	W6-F9B			
5	TC GND	W6-F9A			
6	TC EE	W6-F13B			

VJP1932T

CN30		FROM / TO			
1	CAP MAIN CLK	W5-R8A			
2	GND	W5-R1A,B	CN31-4	CN30-4	
3	CAP OSC	W5-R8B			
4	GND	W5-R1A,B	CN31-4	CN30-2	
5	+7.5V	W5-R29,B			
6	-7.6V	W5-R36,B			
7	TR FG 1	W5-R14R			
8	(GND)	W5-R24A,B			AU-GS/66S/76O ONLY
9	(REC VITC)	W5-R25A,B			AU-GS/66S/76O ONLY
10	(VITCE)	W5-R26A,B			AU-GS/66S/76O ONLY
11	(GND)	W3-R27A,B	W4-R33A	W4-R28A	AU-GS/66S/76O ONLY
12	(COMP SYNC)	W1-R14B	W4-R27A	W3-R28A,B	AU-GS/66S/76O ONLY
13	(VP REC)	W4-R37A			AU-GS/66S/76O ONLY
14	GND	W3-F9A,B	CN600-2		
15	Y PB 2	W3-F8A,B			

VJP1234T (AU-66S/63S ONLY)

CN34		FROM / TO		
1	STILL POS F	W5-R36B		
2	STILL POS R	W5-R36B		
3	AT AR	W5-R37B		
4	AT ON	W5-R39B		
5	NORMAL	W5-R40B		
6	AT EJECT	W5-R41B		

VJP1932T

CN41		FROM / TO		
1	R SYNC	W2-R14B	W1-R23B	
2	R VP	W1-R22A		
3	GND			
4	Y PB SYNC	W1-F15B	W2-F18A	W5-F49A
5	TAPE V	W1-F15A		
6	GND	W1-F14B		
7	TC CF	W1-F16A		
8	R HD	W1-R24B	CN602-2A	
9	GND	W1-R19B	W1-R25A,B	
10	CHARACTOR	W2-R16A		
11	CHARACTOR GATE	W2-R16B		
12	GND	W2-R179,B	W2-R16B	
13	(CUE CF)	W1-R17B	CN47-3	AU-66S/76O ONLY
14	(REF VIDEO)	W1-R45B	CN36-11	AU-66S/76O ONLY
15	(GND)	W1-R44B	CN36-12	AU-66S/76O ONLY

VJP1230T (SPARE)

CN600		FROM / TO		
1	T REEL PULSE 1	W5-R13B		
2	S REEL PULSE 1	W5-R13A		
3	CAP OVERRIDE	W5-R28A		

VJP2893A064

CN20

FROM / TO				A	NO	B	FROM / TO			
W1-R21A	CN602-3A			R FRAMING	1	AUTO OFF LED	CN46-6			
W1-R36A				ADV 1	2	FAN TRBL	CN22-5			
W1-F11B				SEARCH	3	AT MODE	W1-F8A			
W1-R34B				TAPE R/P	4	ADV 2	W1-R34A			
W1-F19A				EJECT TAPE	5	INH	W1-R32A			
W1-R33A				EXT	6	ADV CONT	W1-F20B			
W1-R30A				CF SELECT 2	7	CF SELECT 3	W1-R30B			
W1-R26B				(DUB CF ON)	8	CF SELECT 1	W1-R31A			
W1-F18A	W2-F15A	W3-F14A,B		C OFF	9	FRM ON	W1-R10B			
W1-F27B				REF SCH	10	V PHASE 1	W1-R29A	W2-R18A		
W1-R32B	W4-R38A			(DUB)	11	REF DET	W1-R27A			
W1-R28B	W4-R35B			STD	12	LINE	W1-R31B	W4-F21A,B	CN37-2	
W2-F14A				V PHASE CF	13	PHASE INH	W2-F13A			
W3-F38A,B				PCM DET	14	ID OFF	W2-R15A	CN602-1B		
W3-F12A,B	W2-F12B			AT SPEED	15	LOW RF	W3-F22A,B			
W3-R29A,B	W1-F18B	W4-R38B	W6-F32A	VIDEO IN /FM MUT	16	VISC ON	W4-F20A,B			
W4-R34B				N-STD AUTO	17	Y/C	W4-F22A,B	CN37-1		
W4-R34A				IN SCH	18	CPNT CFON /HI SPEED ATT 2	W4-R35A	W6-R13A		
W6-R12A	CN37-4			DUB IN /HI SPEED ATT 1	19	SERVO LOCK	W2-F14B			
W3-F13A,B	W2-F13B			TAPE FWD	20	EJECT LED	CN46-7			
				-14.5V	21	TR FG 2	W5-R14B			
				-11.5V	22	PLAY /LOADING MUT	W6-R13B			
W6-R17B				CAP FWD	23	TC DETECT	W6-F6B			
W6-R12A				SERIAL DATA TIM	24	RC START	W6-R19A	CN31-8		
W6-R10A				SERIAL DATA REL	25	SERIAL DATA FRT	CN46-3			
W6-R11A				SERIAL DATA DRM	26	SERIAL DATA AUD/FM ATT	W6-F40B			
W6-R9A				SERIAL DATA CAP	27	AERIAL DATA SRV	W6-R12B			
W6-R10B	W6-F49A	CN46-5		STRB CLK 16	28	STRB CLK 8	W6-R11B			
W6-R16B				FRAMING /4	29	SERIAL CLK	W6-R9B	W6-F48A	CN46-4	
W6-R7A				5 FRAMING	30	FRAMING /2	W6-R15A			
W6-R18B				CTL PULSE	31	R/P HEAD	W6-R42B	W1-R33B	W3-F25A,B	
W6-F6A				TCG/TCR ON	32	PINCH ON	W6-R38B			

DIGITAL INTERFACE

(AU-66S/76O OPTION)

CN601

FROM / TO			A	NO	B	FROM / TO			
W1-S0B			GND	1	PB 1	W1-F49A			
W1-F49B			PB 2	2	PB 3	W1-F49A			
W1-F48B			PB 4	3	PB 5	W1-F47A			
W1-F47B			PB 6	4	PB 7	W1-F46A			
W1-F46B			PB 8	5	PR 1	W1-F44A			
W1-F44B			PR 2	6	PR 3	W1-F43A			
W1-F43B			PR 4	7	PR 5	W1-F42A			
W1-F42B			PR 6	8	PR 7	W1-F41A			
W1-F41B			PR 8	9	GND	W1-F40A,B			
W1-F39B			Y 1	10	Y 2	W1-F38A			
W1-F38B			Y 3	11	Y 4	W1-F37A			
W1-F37B			Y 5	12	Y 6	W1-F36A			
W1-F36B			Y 7	13	Y 8	W1-F35A			

CN602

FROM / TO				A	NO	B	FROM / TO			
W1-F18A	W2-F15A	W3-F14A,B	CN20-9A	C OFF	1	ID OFF	W2-R15A	CN20-14B		
W1-R24B	CN41-8			R HD	2	Y RCLK	W1-F39A			
W1-R21A	CN20-1A			R FRAMING	3	-7.5V	POWER2-4			
				+5V	4	←	POWER1-3,4			
				GND	5	←	POWER1-5,6			
W1-R16B	W2-R12B	W6-R15A		REF CF	6	+11.5V	POWER1-2			
					7					

TYPE \ MODEL	AU-665	AU-65	AU-63	AU-62
NTSC	VEP80548B	VEP80548A	VEP80548D	VEP80548C
PAL	VEP80548E	VEP80548A	VEP80548D	VEP80548C

W0 (W,MOTHER) SCHEMATIC DIAGRAM 3/4

W0 (W,MOT

W1-F
VJS2898A100

< W1 > TBC & SYNC GEN (FRONT)										
FROM / TO				A	NO	B	FROM / TO			
				GND	1	←				
				+5V	2	←				
				+5V	3	←				
				+11.5V	4	←				
				+11.5V	5	←				
W2-F20A				Y BST	6	GND				
				GND	7	C BST	W2-F20B			
CN20-3B				AT MODE	8	Y/C DELAY	CN40-11			
W5-R40A				H CONT 3	9	H CONT 4	W5-R39A			
W5-R42A				H CONT 1	10	H CONT 2	W5-R41A			
W5-F46A	W3-F27A,B			Y HEAD SW	11	SEARCH	CN20-3A			
W2-F12A				SEARCH ON	12	PB FRAMING 2	W5-R35A			
W5-R36A	W3-F19A,B			Y DOP	13	GND				
W5-R39A	W3-F20A,B	W5-F44A		C DOP	14	GND	CN41-6			
CN41-5				TAPE V	15	Y PB SYNC	W5-F49A	CN41-4	W2-F18A	
W2-F17A				Y CP	16	C PB SYNC	W5-F49B	W2-F18B		
W2-F17B	W3-F17A,B			C CP	17	AGC CP	W3-F16A,B			
CN20-9A	W2-F15A	W3-F14A,B	CN602-1A	C OFF	18	VIDEO IN	W3-R29A,B	W4-R38B	CN20-16A	W5-F32A
CN20-5A				EJECT TAPE	19	E E	W2-F15B	W3-F15A,B	W5-R27B	W5-F46B
				Y SH	20	ADV CONT	CN20-6B			
					21					
W2-F22A				GND	22	←	W2-F22B			
W2-F23A				C DATA 7	23	C DATA 8	W2-F23B			
W2-F24A				C DATA 5	24	C DATA 6	W2-F24B			
W2-F25A				C DATA 3	25	C DATA 4	W2-F25B			
W2-F26A				C DATA 1	26	C DATA 2	W2-F26B			
W2-F27A				C WCK	27	GND	W2-F27B			
W2-F28A				GND	28	←	W2-F28B			
W2-F29A				Y DATA 8	29	Y DATA 9	W2-F29B			
W2-F30A				Y DATA 6	30	Y DATA 7	W2-F30B			
W2-F31A				Y DATA 4	31	Y DATA 5	W2-F31B			
W2-F32A				Y DATA 2	32	Y DATA 3	W2-F32B			
W2-F33A				Y WCK	33	Y DATA 1	W2-F33B			
W2-F34A				GND	34	←	W2-F34B			
CN601-13B				Y 8	35	Y 9	—			
CN601-12B				Y 6	36	Y 7	CN601-13A			
CN601-11B				Y 4	37	Y 5	CN601-12A			
CN601-10B				Y 2	38	Y 3	CN601-11A			
CN602-2B				Y RCLK	39	Y 1	CN601-10A			
				GND	40	←	CN601-9B			
CN601-8B				PR 7	41	PR 8	CN601-9A			
CN601-7B				PR 5	42	PR 6	CN601-8A			
CN601-6B				PR 3	43	PR 4	CN601-7A			
CN601-5B				PR 1	44	PR 2	CN601-6A			
				GND	45	GND				
CN601-4B				PB 7	46	PB 8	CN601-5A			
CN601-3B				PB 5	47	PB 6	CN601-4A			
CN601-2B				PB 3	48	PB 4	CN601-3A			
CN601-1B				PB 1	49	PB 2	CN601-2A			
				GND	50	←	CN601-1A			

W2-F
VJS2898A100

< W2 > ENCODER (FRONT)										
FROM / TO				A	NO	B	FROM / TO			
				GND	1	←				
				+5V	2	←				
				+5V	3	←				
				+11.5V	4	←				
				+11.5V	5	←				
				GND	6	←				
CN500-1	W3-F2A,B			Y PB 1	7	GND				
CN500-2				GND	8	←				
CN500-3	W3-F10A,B			C PB	9	GND				
CN500-4				GND	10	←				
					11					
W1-F12A				SEARCH ON	12	HI SPEED	W3-F12A,B	CN20-15A		
CN20-13B				PHASE INH	13	TAPE FWD	W3-F13A,B	CN20-20A		
CN20-13A				V PHASE CP	14	SERVO LOCK	CN20-19B			
CN20-9A	W1-F18A	W3-F14A,B	CN602-1A	C OFF	15	E E	W5-R27B	W1-F19B	W3-F15A,B	W5-F46B
				GND	16	←				
W1-F16A				Y CP	17	C CP	W1-F17A	W3-F17A,B		
W1-F15B	W5-F49A	CN41-4		Y PB SYNC	18	C PB SYNC	W1-F16B	W5-F49B		
					19					
W1-F6A				Y BST	20	C BST	W1-F7B			
					21					
W1-F22A				GND	22	←	W1-F22B			
W1-F23A				C DATA 7	23	C DATA 8	W1-F23B			
W1-F24A				C DATA 5	24	C DATA 6	W1-F24B			
W1-F25A				C DATA 3	25	C DATA 4	W1-F25B			
W1-F26A				C DATA 1	26	C DATA 2	W1-F26B			
W1-F27A				C WCK	27	GND	W1-F27B			
W1-F28A				GND	28	←	W1-F28B			
W1-F29A				Y DATA 8	29	Y DATA 9	W1-F29B			
W1-F30A				Y DATA 6	30	Y DATA 7	W1-F30B			
W1-F31A				Y DATA 4	31	Y DATA 5	W1-F31B			
W1-F32A				Y DATA 2	32	Y DATA 3	W1-F32B			
W1-F33A				Y WCK	33	Y DATA 1	W1-F33B			
W1-F34A				GND	34	←	W1-F34B			
					35					
					36					
					37					
					38					
					39					
				GND	40	←				
					41					
					42					
					43					
					44					
W1-R7A				R45C	45	GND				
					46					
					47					
					48					
					49					
				GND	50	←				

W3-F
VJS2898A100

< W3 > MOD & DEMOD (FRONT)										
FROM / TO				A	NO	B	FROM / TO			
				GND	1	←				
				+5V	2	←				
				+5V	3	←				
				+11.5V	4	←				
				+11.5V	5	←				
				GND	6	←				
W2-F7A	CN500-1			Y PB 1	7	←				
CN30-15				Y PB 2	8	←				
CN30-14	CN500-2			GND	9	←				
W2-F9A	CN500-3			C PB	10	←				
CN500-4				GND	11	←				
CN20-15A	W2-F12B			HI SPEED	12	←				
CN20-20A	W2-F13B			TAPE FWD	13	←				
CN20-9A	W2-F15A	W1-F18A	CN602-1A	C OFF	14	←				
W1-F19B	W2-F15B	W5-R27B	W5-F46B	E E	15	←				
W1-F17B				AGC CP	16	←				
W1-F17A	W2-F17B			C CP	17	←				
				GND	18	←				
W5-R36A	W1-F13A			Y DOP	19	←				
W5-R38A	W1-F14A	W6-F44A		C DOP	20	←				
				GND	21	←				
CN20-15B				LOW RF	22	←				
					23					
					24					
				R/P HEAD	25	→	R/P HEAD	W1-R33B	W5-R42B	CN20-31B
				GND	26	→	GND			
				Y HEAD SW	27	→	Y HEAD SW	W1-F11A	W5-F46A	
				Y RT HSW	28	→	Y RT HSW	W5-F46B		
				Y R/P HSW	29	→	Y R/P HSW	W5-F47A		
				GND	30	→	GND			
				C HEAD SW	31	→	C HEAD SW	W5-F47B	W6-F47B	
				C RT HSW	32	→	C RT HSW	W5-F48A		
				C R/P HSW	33	→	C R/P HSW	W5-F48B		
				GND	34	→	GND			
					35					
				Y RF	36	→	Y RF	CN36-7		
				GND	37	→	GND	CN36-8		
				PCM DET	38	→	PCM DET	CN20-14A		
				GND	39	→	GND			
				Y R/P PB SYNC	40	→	Y R/P PB SYNC	W5-F44B		
				Y R/P RF DET	41	→	Y R/P RF DET	W5-F45B		
				GND	42	←	GND			
				(C PCM AT RF)	43	←	GND	CN3D4-1		
				(GND)	44	←	GND	CN3D4-2		
				C AT RF	45	←	GND	W5-F44A		
				GND	46	←	GND	W5-F45A		
				C RF	47	←	GND	CN36-9	W6-F44B	
				GND	48	←	GND	CN36-10		
				(Y PCM AT RF)	49	←	GND	CN3D4-3		
				(GND)	50	←	GND	CN3D4-4		

< W4 >					
FROM / TO					

W0 (W,MOTHER) SCHEMATIC DIAGRAM 4/4

W4-F
VJS2898A100 (AU-65/665 ONLY)

FROM / TO				A	NO	B	FROM / TO			
				GND	1	←				
				+5V	2	←				
				+5V	3	←				
				+11.5V	4	←				
				+11.5V	5	←				
				GND	6	←				
				GND	7	←				
				GND	8	←				
				GND	9	←				
				GND	10	←				
					11					
CN36-2				GND	12	GND				
CN36-1				LINE	13	GND				
				LINE	14	GND				
					15					
					16					
					17					
				GND	18	←				
CN24-1				LEVEL CONT	19	←				
CN20-16B				VISC ON	20	←				
CN20-12B	CN37-2	W1-R31B		LINE	21	←				
CN20-17B	CN37-1			Y/C	22	←				
				GND	23	←				
					24					
W5-R42B	CN20-31B				25					
					26					
W5-F46A					27					
					28					
					29					
					30					
W6-F47B					31					
					32					
					33					
					34					
					35					
					36					
				GND	37	GND				
CN36-3				4P Y	38	GND				
CN36-4				GND	39	GND				
CN36-5				4P C	40	GND				
CN36-6				GND	41	GND				
				GND	42	GND				
				GND	43	GND				
				GND	44	GND				
				GND	45	GND				
				GND	46	GND				
W6-F44B				GND	47	GND				
				GND	48	GND				
				GND	49	GND				
				GND	50	GND				

W5-F
VJS2898A100

FROM / TO				A	NO	B	FROM / TO			
				GND	1	←				
				+5V	2	←				
				+5V	3	←				
				+11.5V	4	←				
				+11.5V	5	←				
CN15-2				S TENSION	6	T TENSION	CN15-3			
CN15-1				TENSION VCC	7	TENSION GND	CN15-4			
				UNREG GND	8	←				
CN15-5				S M1	9	←				
CN15-6				S H1-	10	S H1*	CN15-7			
CN15-8				S H2	11	←				
CN15-9				S VH+	12	←				
CN15-10				S H2-	13	S H2*	CN15-11			
CN15-12				S H3	14	←				
CN15-14				S VH-	15	←				
CN15-13				S H3-	16	S H3*	CN15-15			
CN14-1				T M1	17	←				
CN14-2				T H1-	18	T H1*	CN14-3			
CN14-4				T M2	19	←				
CN14-5				T VH+	20	←				
CN14-6				T H2-	21	T H2*	CN14-7			
CN14-8				T M3	22	←				
CN14-10				T VH-	23	←				
CN14-9				T H3-	24	T H3*	CN14-11			
				UNREG GND	25	←				
CN13-1				C M2	26	←				
CN13-2				C H2-	27	C H1*	CN13-3			
CN13-5				C M3	28	←				
CN13-4				C H2+	29	C H3-	CN13-6			
CN13-7				C VH-	30	←				
CN13-9				C VH+	31	←				
CN13-8				C H3+	32	C H1-	CN13-11			
CN13-10				C M1	33	←				
				UNREG GND	34	←				
CN12-1				D H1+	35	D H1-	CN12-2			
CN12-3				D H2+	36	D H2-	CN12-4			
CN12-5				D H3-	37	D H3*	CN12-6			
CN12-7				D M2	38	←				
CN12-8				D M1	39	←				
CN12-9				D M3	40	←				
CN12-10				D VH-	41	←				
CN12-11				D VH+	42	←				
				UNREG GND	43	←				
W3-F45B				C AT RF	44	Y R/P PB SYNC	W3-F40A,B			
W3-F46B				GND	45	Y R/P RF DET	W3-F41A,B			
W3-F27A,B	W1-F11A			Y HEAD SW	46	Y AT HSW	W3-F28A,B			
W3-F29A,B				Y R/P HSW	47	C HEAD SW	W3-F31A,B	W6-F47B		
W3-F32A,B				C AT HSW	48	C R/P HSW	W3-F33A,B			
W1-F16B	CN41-4	W2-F18A		Y PB SYNC	49	C PB SYNC	W1-F16B	W2-F18B		
				GND	50	←				

W6-F
VJS2898A100

FROM / TO				A	NO	B	FROM / TO			
CN402-4				GND	1	←				
CN402-3				+5V	2	←				
				+5V	3	←				
				+11.5V	4	←				
				+11.5V	5	←				
CN20-32A				TCD/TCR ON	6	TC DETECT	CN20-23B			
CN402-1				CUE REC	7	CUE	CN402-2			
CN21-3				TCR PB	8	TCR EXT	CN21-1			
CN21-2,5				TC GND	9	TCD/TCR	CN21-4			
CN22-3				EXT TC OUT	10	EXT TC IN	CN22-1			
CN22-4				TC GND	11	TC GND	CN22-2			
				GND	12	GND				
					13	TC EE	CN21-6			
					14					
					15					
					16					
					17					
					18					
					19					
					20					
					21					
					22					
					23					
					24					
					25					
					26					
					27					
					28					
					29					
					30					
W1-F10B	W3-R29A,B	W4-R30B	CN20-16A	GND	31	GND				
				FM MUT	32					
				GND	33	GND				
CN26-2,5				GND	34	CH3 REC VR (-)	CN26-1			
CN26-4				CH3 PB VR (-)	35	CH3 PB VR (-)	CN26-3			
CN26-12	CN28-2			GND	36	CH3 LINE	CN26-11	CN28-1		
				GND	37	GND				
CN26-7,10				GND	38	CH4 REC VR (-)	CN26-6			
CN26-9				CH4 PB VR (+)	39	CH4 PB VR (-)	CN26-8			
CN26-14	CN28-4			GND	40	CH4 LINE	CN26-13	CN28-3		
				GND	41	GND				
				GND	42	FM AUDIO	W3-R38A,B			
				GND	43	GND				
W1-F14A	W3-F20A,B	W5-R38A		C DOP	44	C RF	W3-F47B	CN36-9		
				GND	45	GND				
W5-R19B	CN31-7			REC RELAY	46	E-E	W1-F19B	W2-F15B	W3-F15A,B	W5-R27B
				GND	47	C HEAD SW	W6-F47B	W3-F31A,B		
W5-R39B	CN20-29B	CN46-4		SERIAL CLK	48	SERIAL DATA AUD/FM ATT	CN20-26B			
W5-R10B	CN20-28A	CN46-5		STRB CLK 16	49					
				GND	50	←				

W4-R
VJS2898A100 (AU-65/665 ONLY)

FROM / TO				A	NO	B	FROM / TO			
				GND	1	←				
CN48-1				+7.5V	2	←				
CN48-2				-7.5V	3	←				
CN48-3				-11.5V	4	←				
				-11.5V	5	←				
CN48-4				GND	6	GND				
CN48-5				BNC Y	7	GND				
CN48-6				GND	8	GND				
CN48-7				BNC PB	9	GND				
CN48-8				GND	10	GND				
CN48-9				BNC PR	11	GND				
CN48-10				GND	12	GND				
					13	GND				
				GND	14	GND				
					15	GND				
				GND	16	GND				
					17	GND				
				GND	18	GND				
					19	GND				
					20					
					21	GND				
				GND	22	GND				
W3-R23A,B				Y	23	GND				
				GND	24	GND				
					25	GND				
					26	GND				
CN30-12	W1-R14B	W3-R20A,B		COMP SYNC	27	GND				
CN30-11				GND	28	GND				
W5-R25A				(DUB Y DOP)	29	GND				
W5-R26A				(DUB C DOP)	30	GND				
					31					
					32					
CN30-11				GND	33	GND				
CN20-18A				TM SCH	34	A-STO AUTO	CN20-17A			
CN20-19B	W6-R13A			CPMT CF ON	35	STO	CN20-12A	W1-R28B		
W1-R15A				LINE CF	36	COMPNT CF	W1-R15B			
CN30-13				VP REC	37	C CLAMP	W3-R42A,B			
CN20-11A	W1-R32B			(DUB)	38	VIDEO IN	W3-R29A,B	CN20-16A	W1-F18B	W6-F32A
					39					
					40					
				GND	41	GND				
CN37-7				(DUB CTCH)	42	GND				
CN37-6				GND	43	GND				
W3-R44A,B				CTCH	44	GND				
				GND	45	GND				
CN302-5				+14.5V	46	←				
CN302-6				+11.5V	47	←				
				+5V	48	←				
				+5V	49	←				
CN302-7				GND	50	←				

W5-R
VJS2898A100

FROM / TO				A	NO	B	FROM / TO			
CN30-2	CN31-4			GND	1	←	CN30-4			
CN31-3	CN30-5			+7.5V	2	←				
CN31-6	CN30-6	CN46-2		-7.5V	3	←				
CN35-8				-11.5V	4	←				
CN31-5	CN40-2			-14.5V	5	←				
CN35-10,11				UNREG GND	6	←				
CN20-30A				S FRAMING	7	+24V				
CN30-1				CAP MAIN CLK	8	CAP OSC	CN30-3			
CN20-27A				SERIAL DATA CAP	9	SERIAL CLK	CN20-29B	W6-F48A	CN46-4	
CN20-25A				SERIAL DATA REL	10	STRB CLK 16	CN20-29A	W6-F49A	CN46-5	
CN20-26A				SERIAL DATA DRM	11	STRB CLK 8	CN20-28B			
CN20-24A				SERIAL DATA TIM	12	SERIAL DATA SRV	CN20-27B			
CN600-3				S REEL PULSE 1	13	T REEL PULSE 1	CN600-1			
CN30-7				TR FG 1	14	TR FG 2	CN20-21B			
W1-R16B	W2-R12B	CN602-6A		REF CF	15	FRAMING	W1-R20A			
CN20-30B				FRAMING /2	16	FRAMING /4	CN20-29A			
CN24-4				TRACKING +	17	CAP FWD	CN20-23A			
CN24-3				TRACKING -	18	CTL PULSE	CN20-31A			
CN31-8	CN20-24B			RE START	19	REC RELAY	CN31-7	W6-F46A		
CN31-9				RE CH1 SW	20	RE CH2 SW	CN31-10			
CN31-12				Y CH1 REC SW	21	C CH1 REC SW	CN31-14			
CN31-13				Y CH2 REC SW	22	C CH2 REC SW	CN31-15			
CN300-1				(Y CH1 PCM GATE)	23	(C CH1 PCM GATE)	CN300-4			
CN300-2				(Y CH2 PCM GATE)	24	(C CH2 PCM GATE)	CN300-5			
W4-29A				(DUB Y DOP)	25	(PCM HSW)	CN301-1			
W4-30A				(DUB C DOP)	26	(PCM GATE)	CN301-2			
W3-R31A,B				MOD	27	E-E	W6-F46B	W2-F15B	W1-F19B	W3-F15A,B
CN600-3				CAP OVERRIDE	28	DRUM FG	CN17-1			
CN300-3,6	CN301-3			GND	29	GND	CN17-2			
CN17-5				CAP V FG +	30	DRUM PG +	CN17-3			
CN17-6				CAP FG 1	31	DRUM PG -	CN17-4			
CN17-7				GND	32	CTL GND	CN8-2			
CN17-8				CAP FG 2	33	CTL HEAD	CN8-1			
				GND	34	CTL GND	CN8-2			
W1-F12B				PB FRAMING 2	35	(STILL POS F)	CN34-1			
W1-F13A	W3-F19A,B			Y DOP	36	(STILL POS R)	CN34-2			
				GND	37	(AT AK)	CN34-3			
W1-F14A	W3-F20A,B	W6-F44A		C DOP	38	PINCH ON	CN20-32B			
W1-F9B				H CONT 4	39	(AT ON)	CN34-4			
W1-F9A				H CONT 3	40	(NORMAL)	CN34-5			
W1-F10B				H CONT 2	41	(AT EJECT)	CN34-6			
W1-F10A				H CONT 1	42	R/P HEAD	W1-R33B	W3-F25A,B	CN20-31B	
CN35-1				(HV MONI)	43	(HV ON)	CN35-2			
CN35-3				(AT PATTERN A)	44	(AT PATTERN B)	CN35-5			
CN35-4				GND	45	←	CN35-6			
CN31-1	CN35-7	CN40-1		+14.5V	46	←				
CN31-2	CN35-9			+11.5V	47	←				
				+5V	48	←				
				+5V	49	←				
				GND	50	←				

W6-R
VJS2898A100

FROM / TO				A	NO	B	FROM / TO			
				GND	1	←				
				+7.5V	2	←				
				-7.5V	3	←				
				-11.5V	4	←				
CN25-1				-14.5V	5	←				
CN25-2				UNREG GND	6	←				
CN25-3				+24V	7	←				
				GND	8	GND				
CN9-1				F/E HEAD (+)	9	F/E HEAD (-)	CN9-2			
CN9-3				F/E HEAD GND	10	←				
				GND	11	GND				
CN20-19A	CN37-4			HI SPEED ATT 1	12	DOLBY SW	CN46-8			
CN20-18B	W4-R35A			HI SPEED ATT 2	13	LOADING MUT	CN20-22B			
				GND	14	GND				
					15					
					16					
					17					
					18					
					19					
					20					
					21					
					22					
					23					
					24					
					25					
					26					
					27					
				GND	28	GND				
CN400-2				GND	29	CH2 DECODE IN	CN400-1			
				GND	30	CH2 DECODE OUT	CN400-3			
CN400-5				GND	31	CH2 ENCODE IN	CN400-4			
				GND	32	CH2 ENCODE OUT	CN400-6			
CN24-6,9				GND	33	CH2 REC VR (-)	CN24-5			
CN24-8				CH2 PB VR (+)	34	CH2 PB VR (-)	CN24-7			
CN23-2	CN25-5			GND	35	CH2 LINE	CN25-4	CN23-1		
CN23-3	CN25-6			AUDIO MUT	36	CH2 E-E	CN401-1			
CN401-3				EXT NR OUT	37	CH1 E-E	CN401-2			
CN46-12				EXT NR ON	38	CH1 DECODE IN	CN401-4			
CN401-5				GND	39	CH1 DECODE OUT	CN401-6			
CN401-8				GND	40	CH1 ENCODE IN	CN401-7			
				GND	41	CH1 ENCODE OUT	CN401-9			
CN24-11,14				GND	42	CH1 REC VR (-)	CN24-10			
CN24-13				CH1 PB VR (+)	43	CH1 PB VR (-)	CN24-12			
CN23-5	CN25-8			GND	44	CH1 LINE	CN25-7	CN23-4		
				GND	45	←				
CN303-1	CN25-9			+14.5V	46	←	CN25-9			
CN303-2				+11.5V	47	←				
				+5V	48	←				
				+5V	49	←				
CN303-3				GND	50	←	CN25-10			

TYPE \ MODEL	AU-665	AU-65	AU-63	AU-62
NTSC	See Page 5-2-9	VEP88062A	VEP88062A	VEP88062A
PAL	———	VEP88062C	VEP88062C	VEP88062C

W1 (TBC & SYNC GEN) SCHEMATIC DIAGRAM 1/6 [FOR AU-65, AU-63, AU-62]

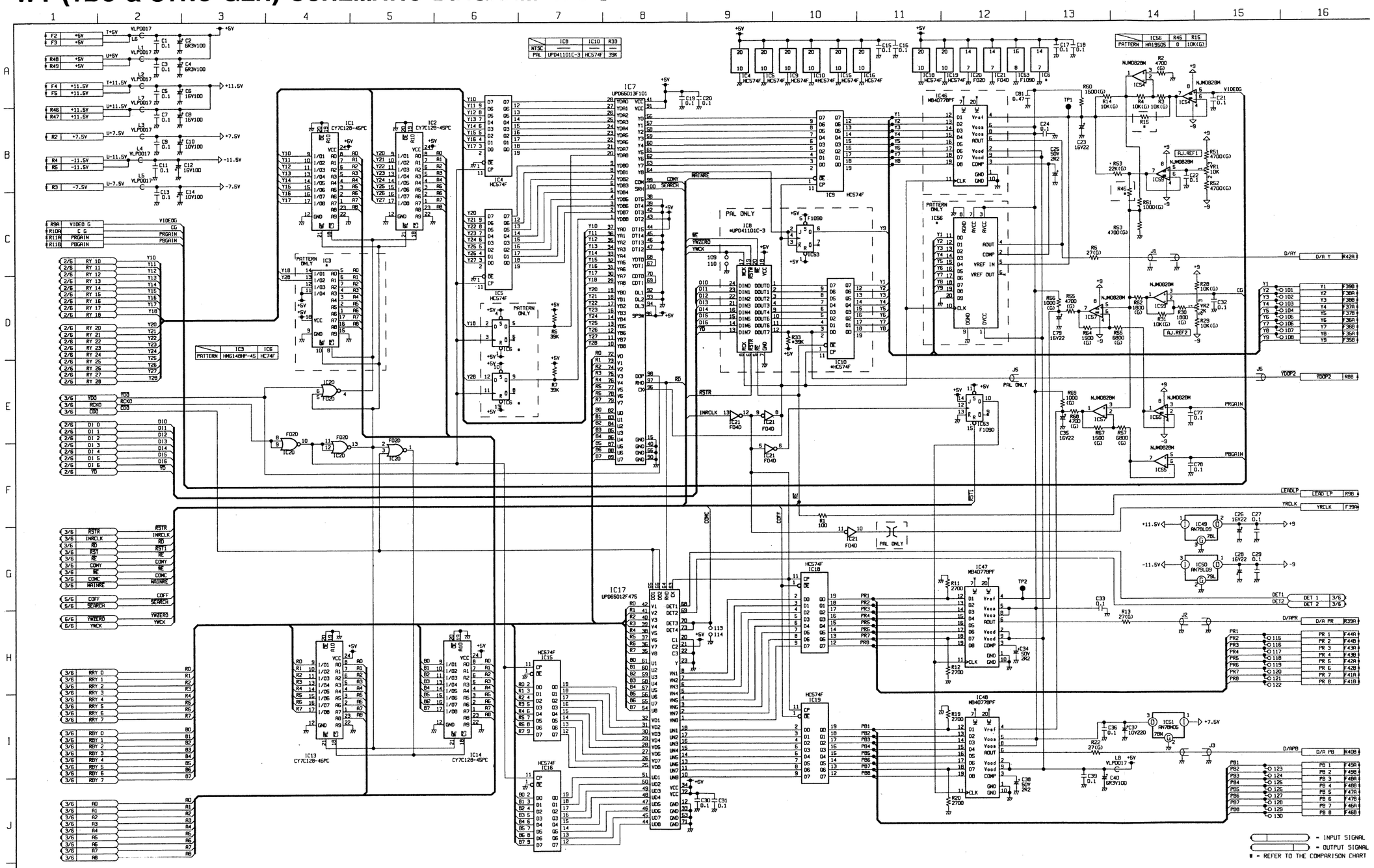

REVERSE SIDE **W. MOTHER SCHEMATIC DIAGRAM**

W1 (TBC & SYNC GEN) SCHEMATIC DIAGRAM 2/6 [FOR AU-65, AU-63, AU-62]

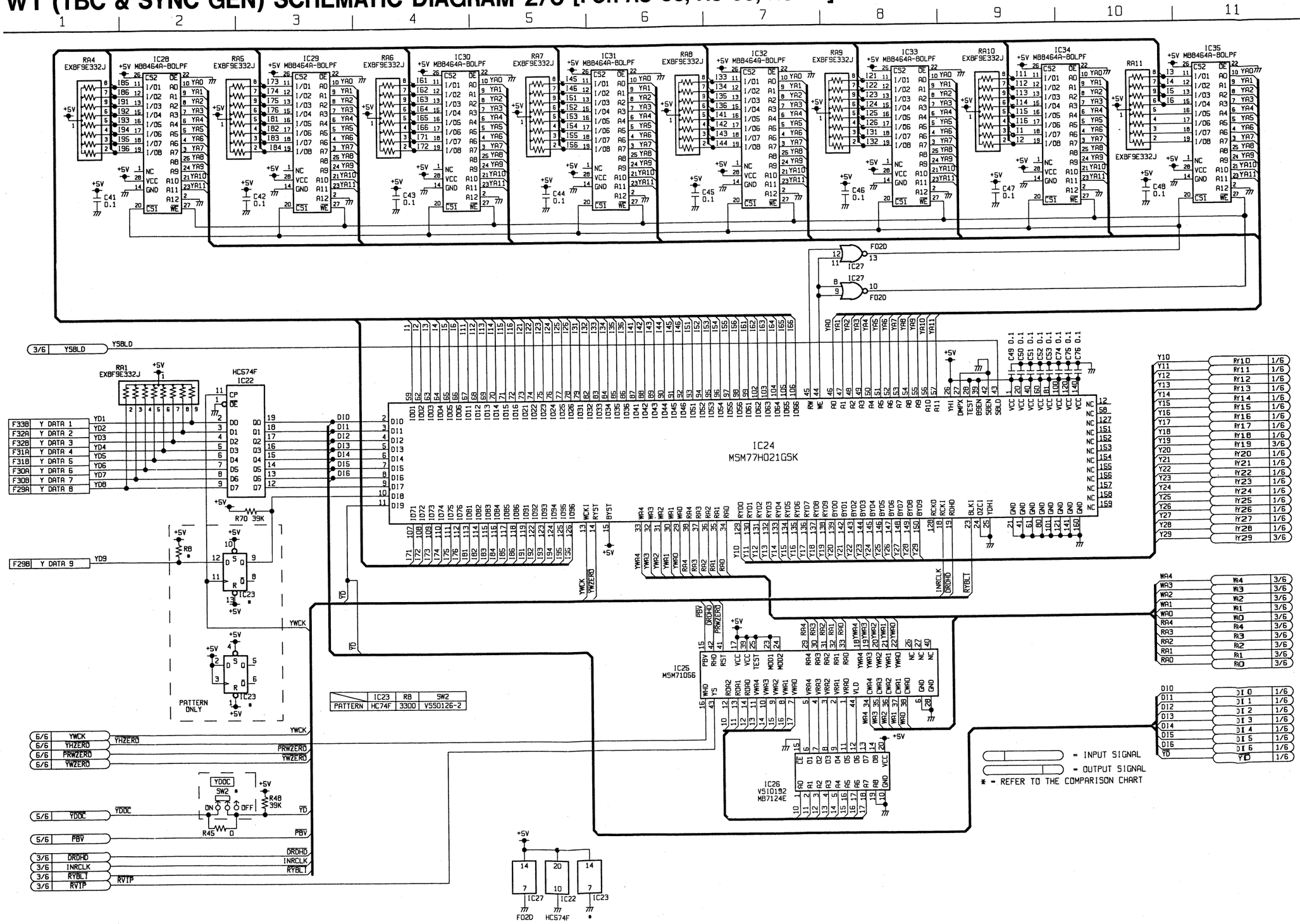

MODEL / TYPE	AU-665	AU-65	AU-63	AU-62
NTSC	See Page 5-2-9	VEP88062A	VEP88062A	VEP88062A
PAL	———	VEP88062C	VEP88062C	VEP88062C

W1 (TBC & SYNC GEN) SCHEMATIC DIAGRAM 3/6 [FOR AU-65, AU-63, AU-62]

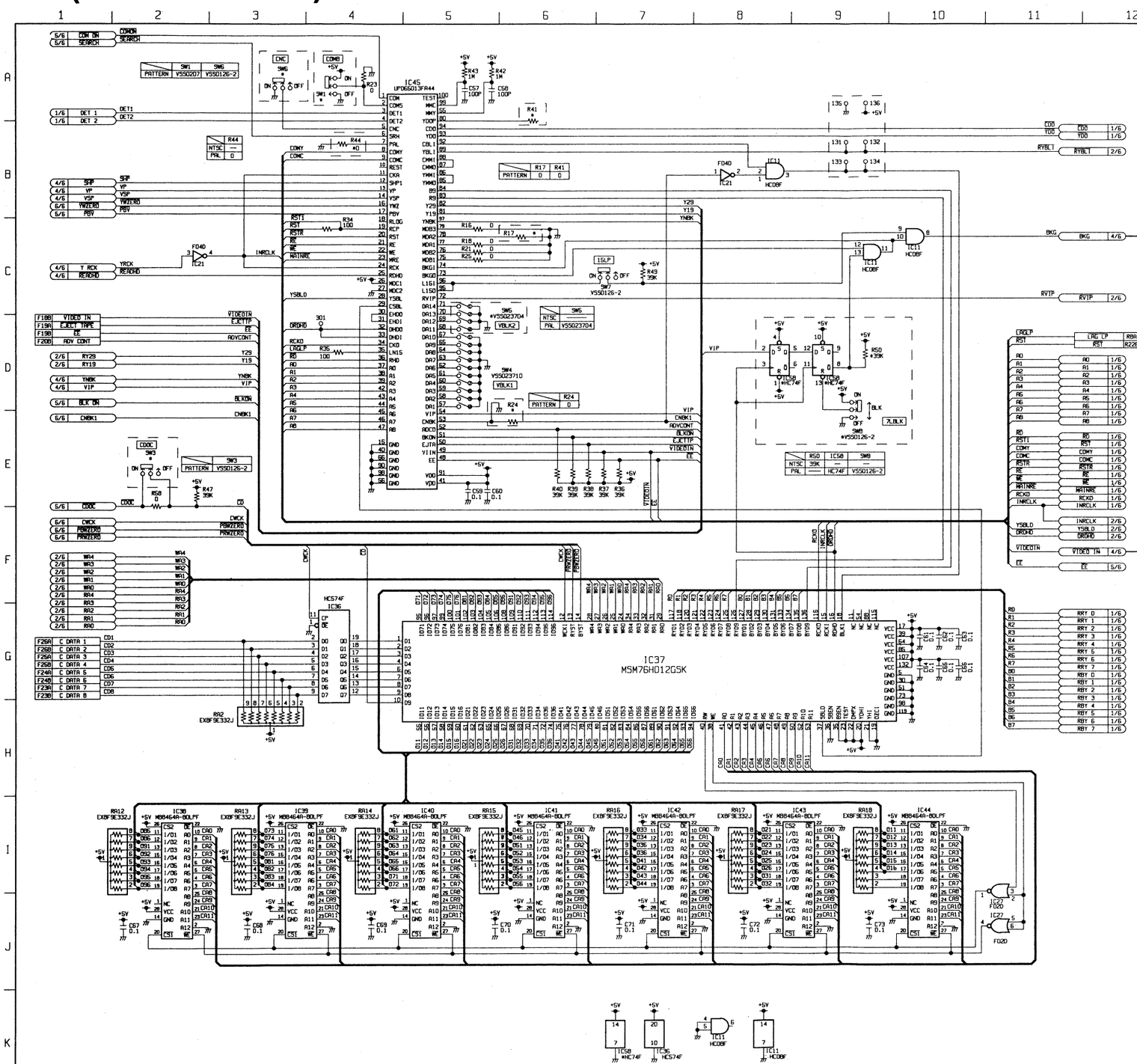

W1 (TBC & SYNC GEN) SCHEMATIC DIAGRAM 4/6 [FOR AU-65, AU-63, AU-62]

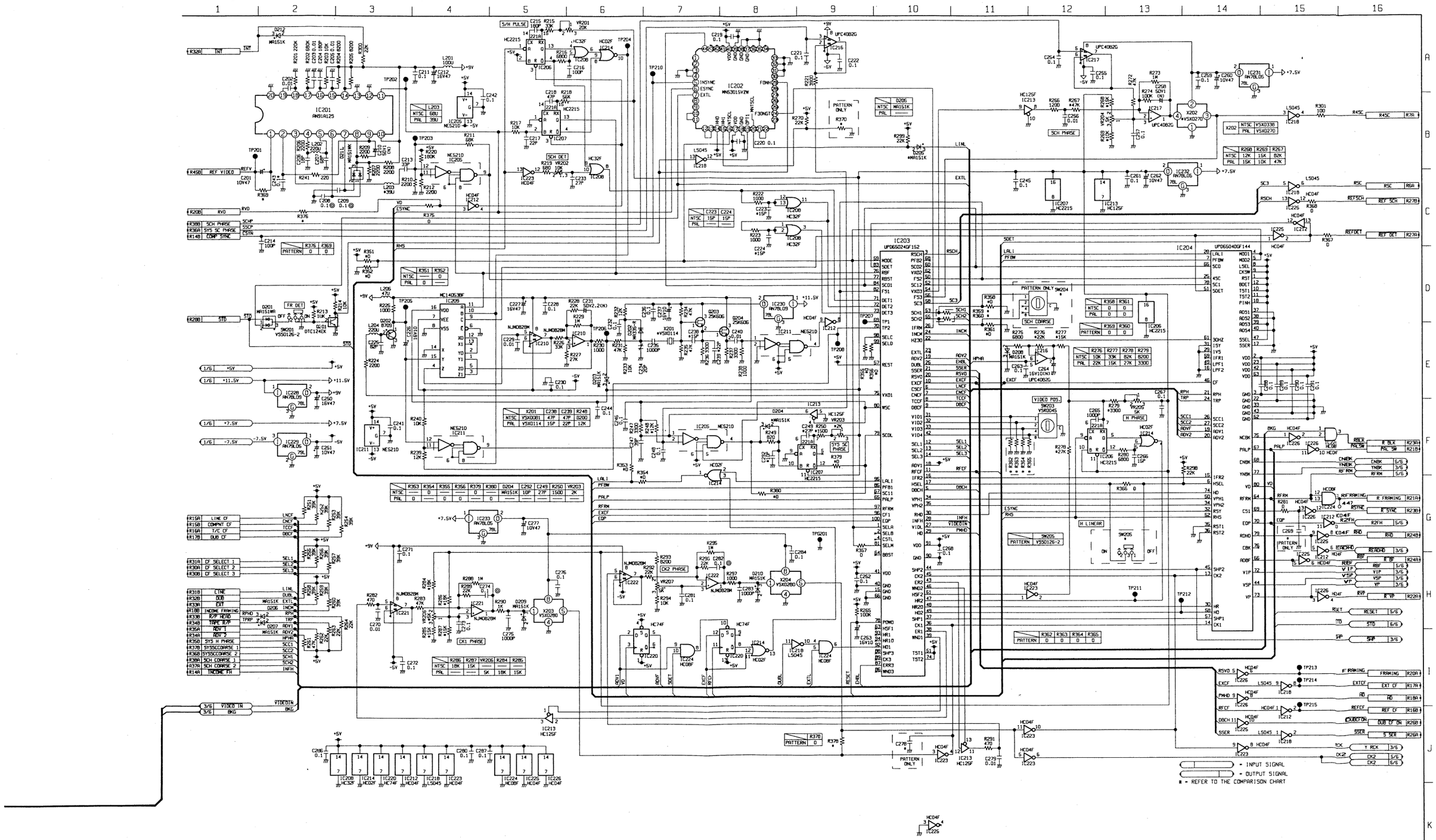

TYPE \ MODEL	AU-665	AU-65	AU-63	AU-62
NTSC	See Page 5-2-9	VEP88062A	VEP88062A	VEP88062A
PAL	———	VEP88062C	VEP88062C	VEP88062C

W1 (TBC & SYNC GEN) SCHEMATIC DIAGRAM 5/6 [FOR AU-65, AU-63, AU-62]

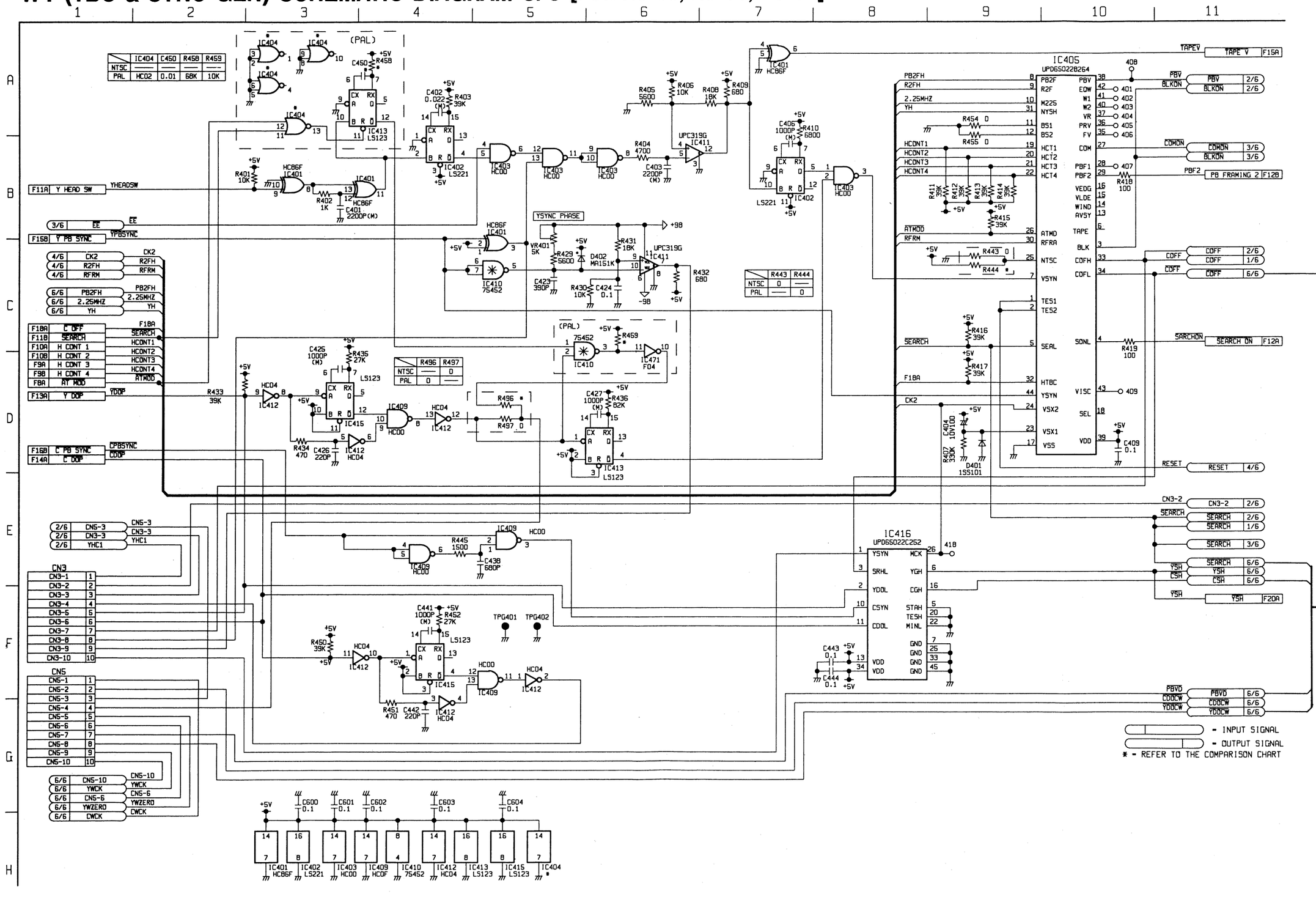

REVERSE SIDE **TBC & SYNC GEN SCHEMATIC DIAGRAM**

W1 (TBC & SYNC GEN) SCHEMATIC DIAGRAM 6/6 [FOR AU-65, AU-63, AU-62]

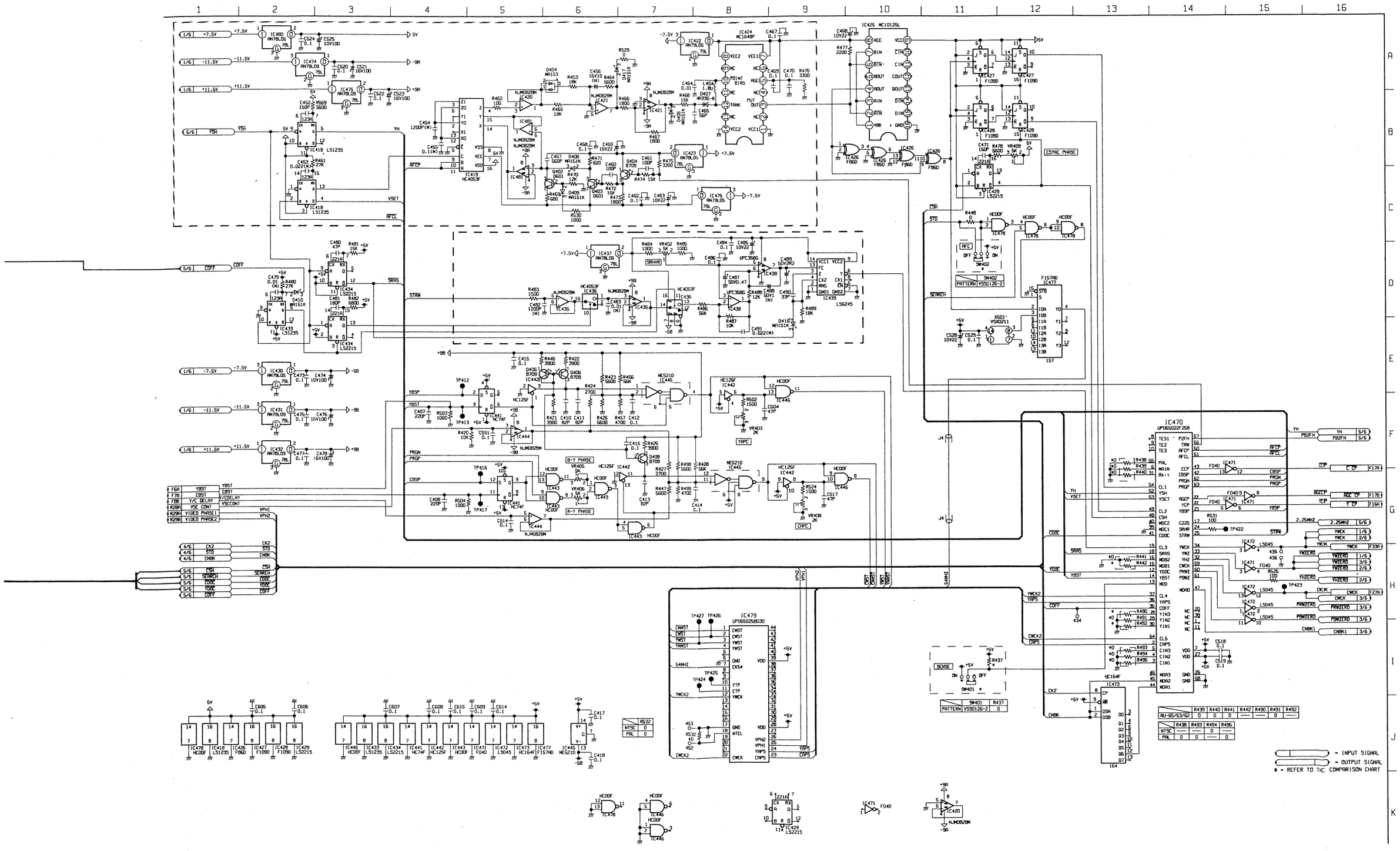

TYPE \ MODEL	AU-665	AU-65	AU-63	AU-62
NTSC	VEP80666A	Not Used	Not Used	Not Used
PAL	———	Not Used	Not Used	Not Used

W1 SUB SCHEMATIC DIAGRAM [FOR AU-665 NTSC]

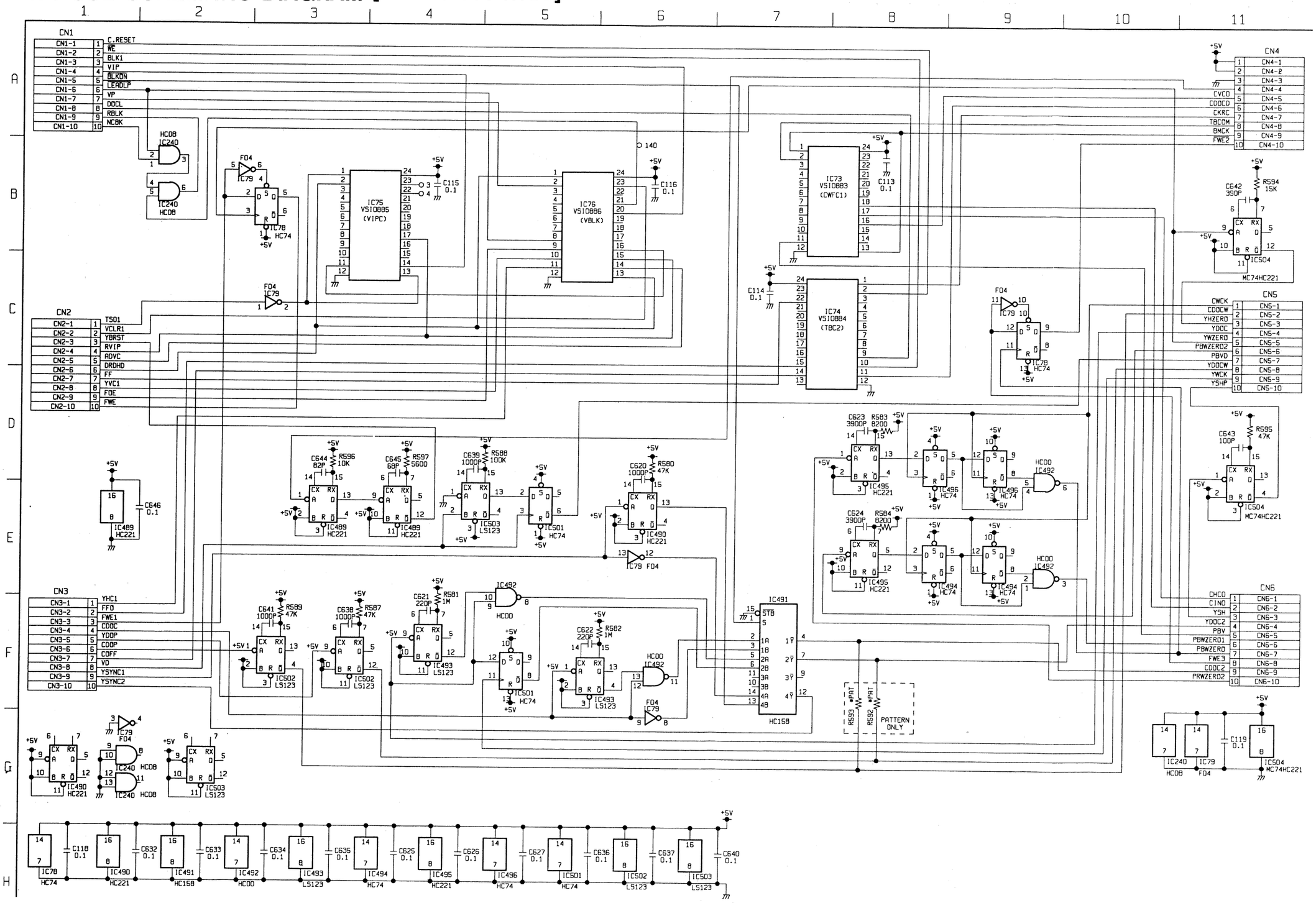

MODEL / TYPE	AU-665	AU-65	AU-63	AU-62
NTSC	VEP88077A	See Pages 5-2-6～5-2-8		
PAL	——			

W1 (TBC & SYNC GEN) SCHEMATIC DIAGRAM 1/6 [FOR AU-665 NTSC]

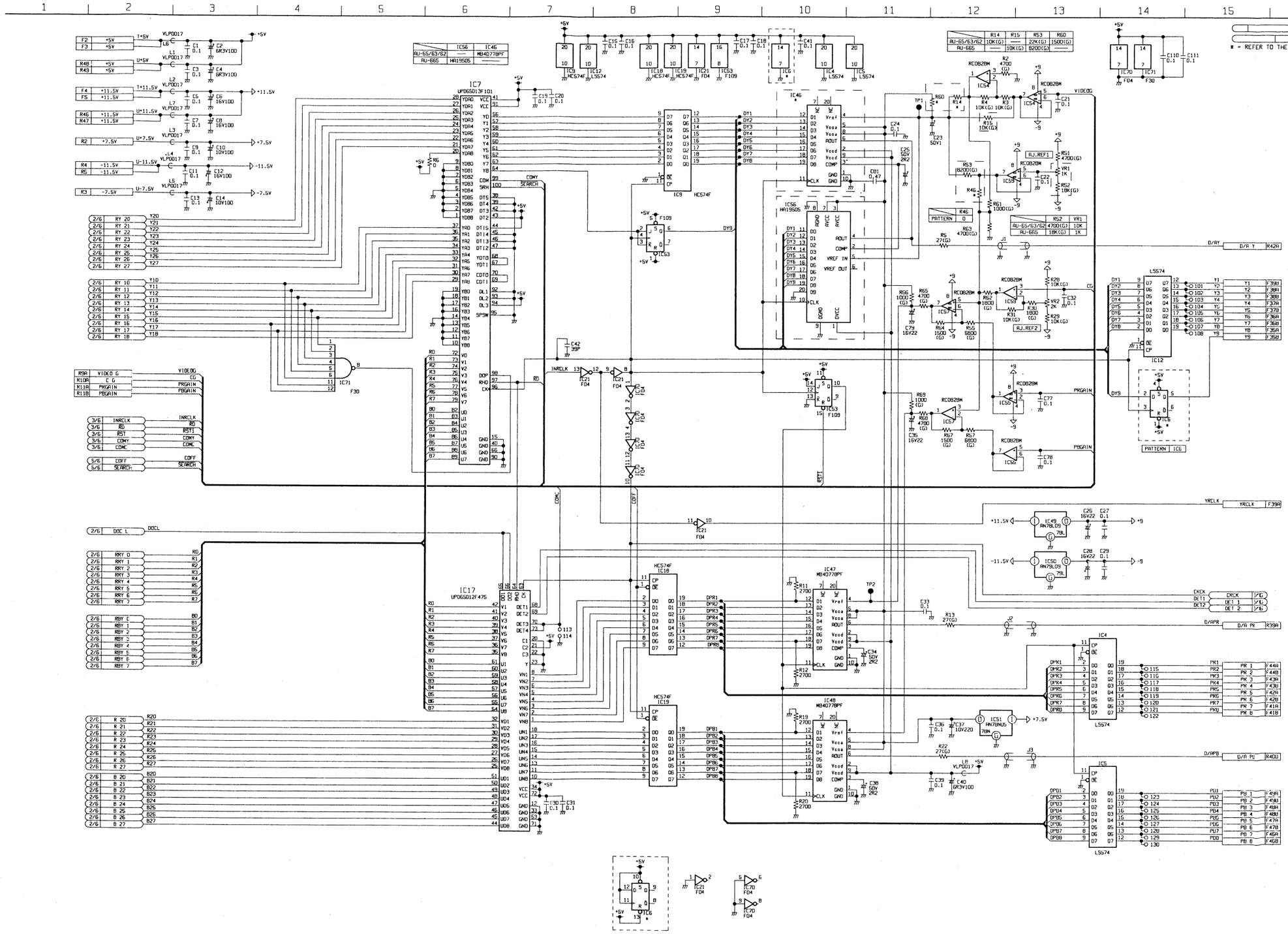

TYPE \ MODEL	AU-665	AU-65	AU-63	AU-62
NTSC	VEP88077A	See Pages 5-2-6~5-2-8		
PAL	———			

W1 (TBC & SYNC GEN) SCHEMATIC DIAGRAM 2/6 [FOR AU-665 NTSC]

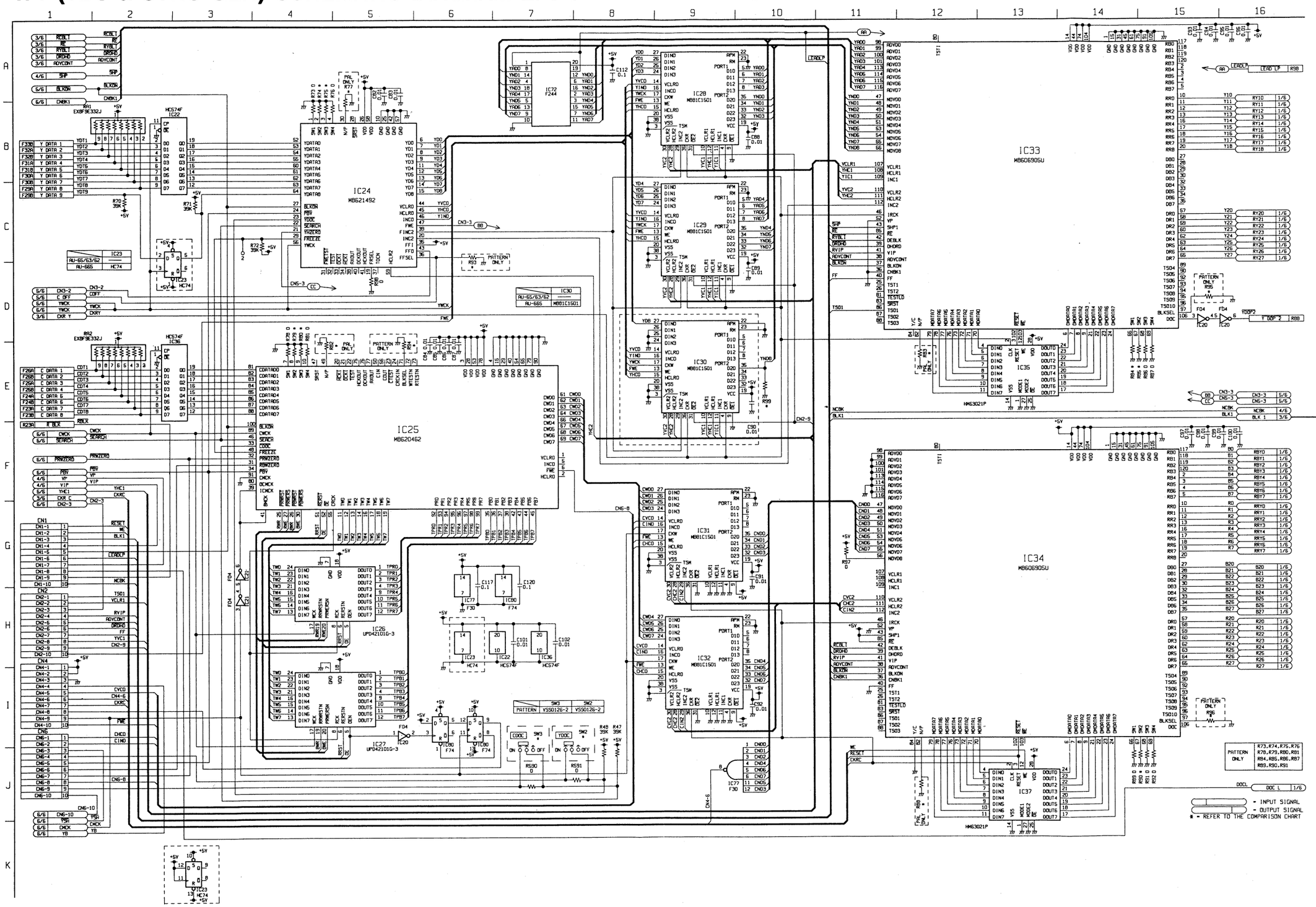

REVERSE SIDE **TBC & SYNC GEN SCHEMATIC DIAGRAM**

W1 (TBC & SYNC GEN) SCHEMATIC DIAGRAM 3/6 [FOR AU-665 NTSC]

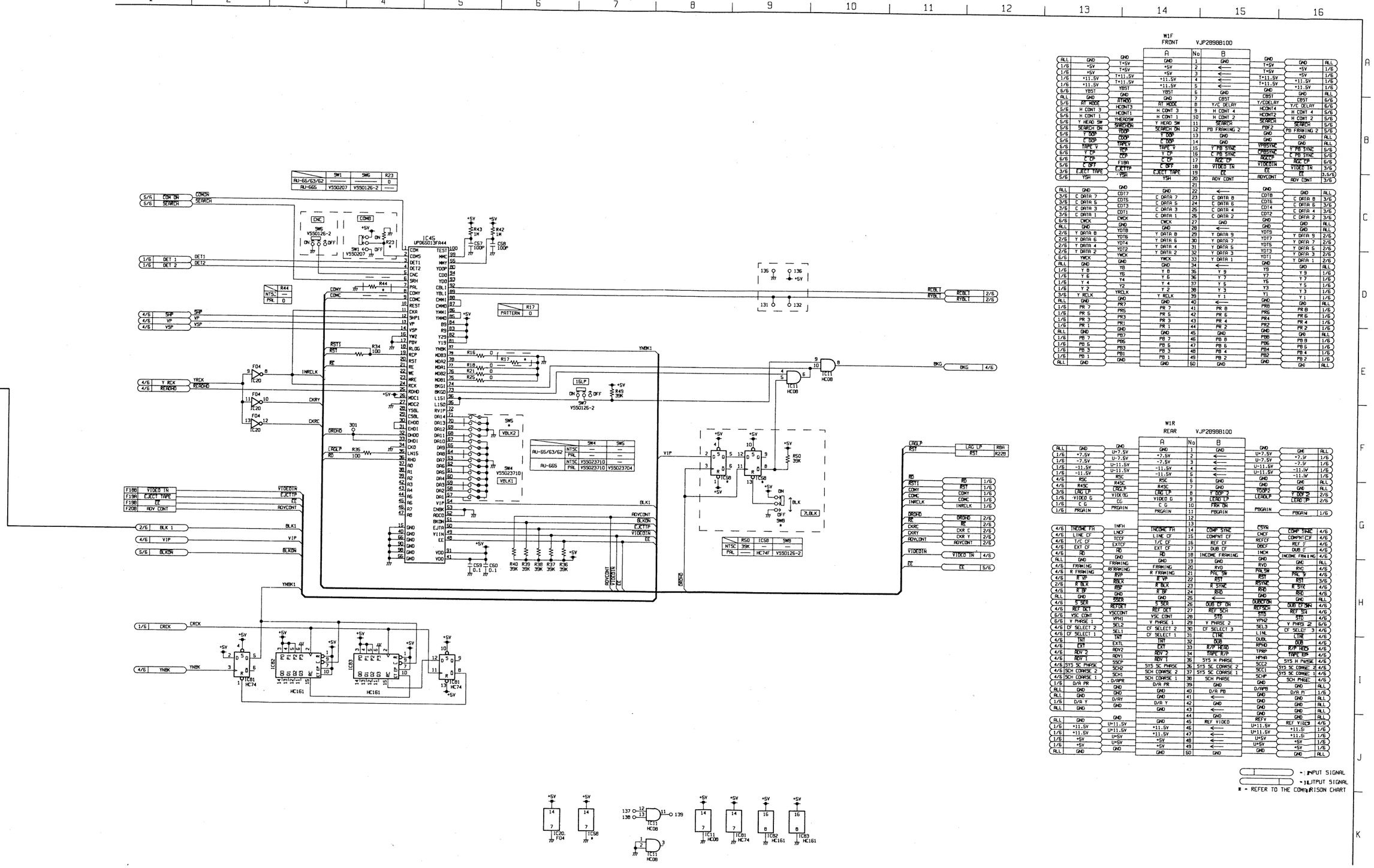

MODEL / TYPE	AU-665	AU-65	AU-63	AU-62
NTSC	VEP88077A	See Pages 5-2-6~5-2-8		
PAL	——			

W1 (TBC & SYNC GEN) SCHEMATIC DIAGRAM 4/6 [FOR AU-665 NTSC]

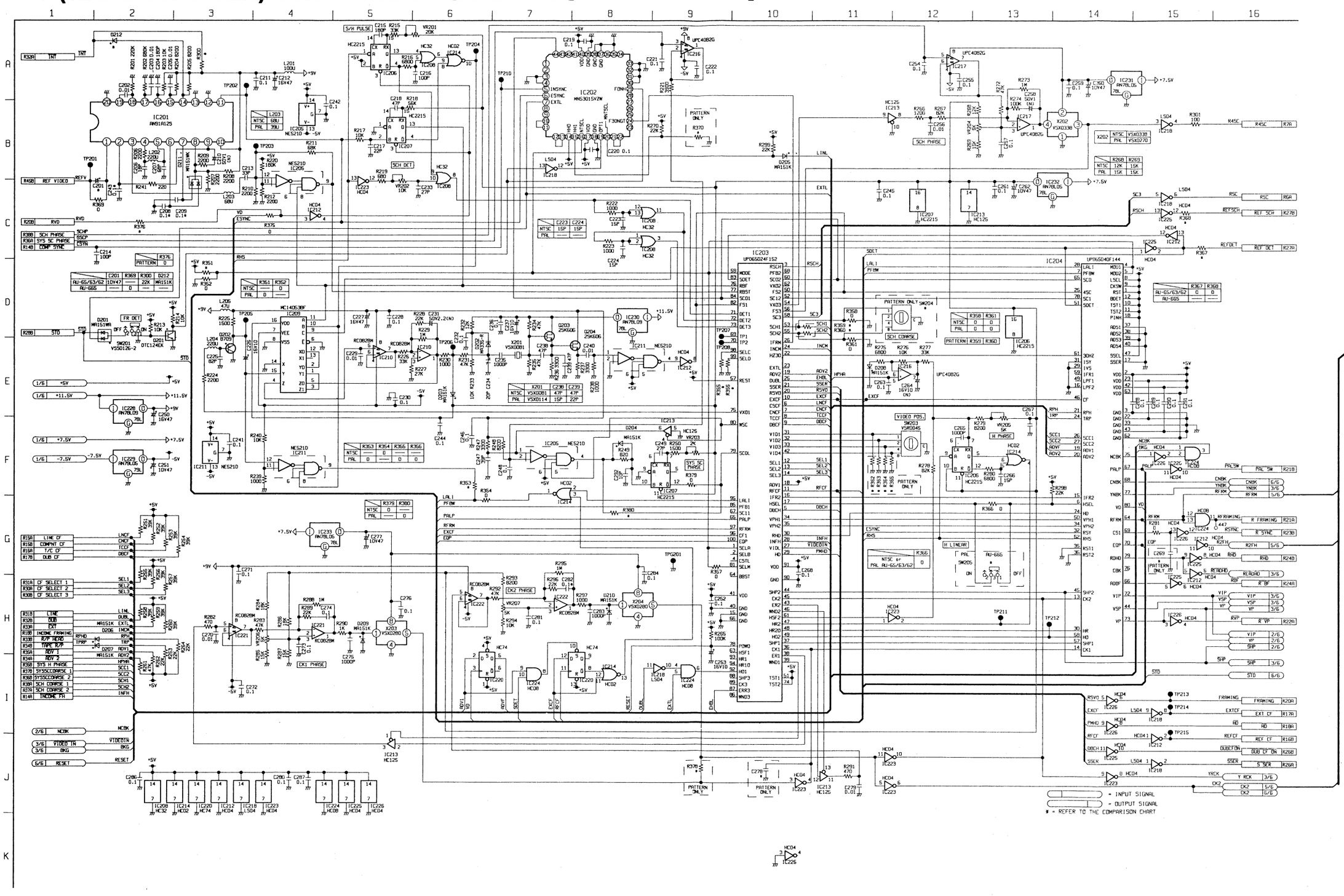

W1 (TBC & SYNC GEN) SCHEMATIC DIAGRAM 5/6 [FOR AU-665 NTSC]

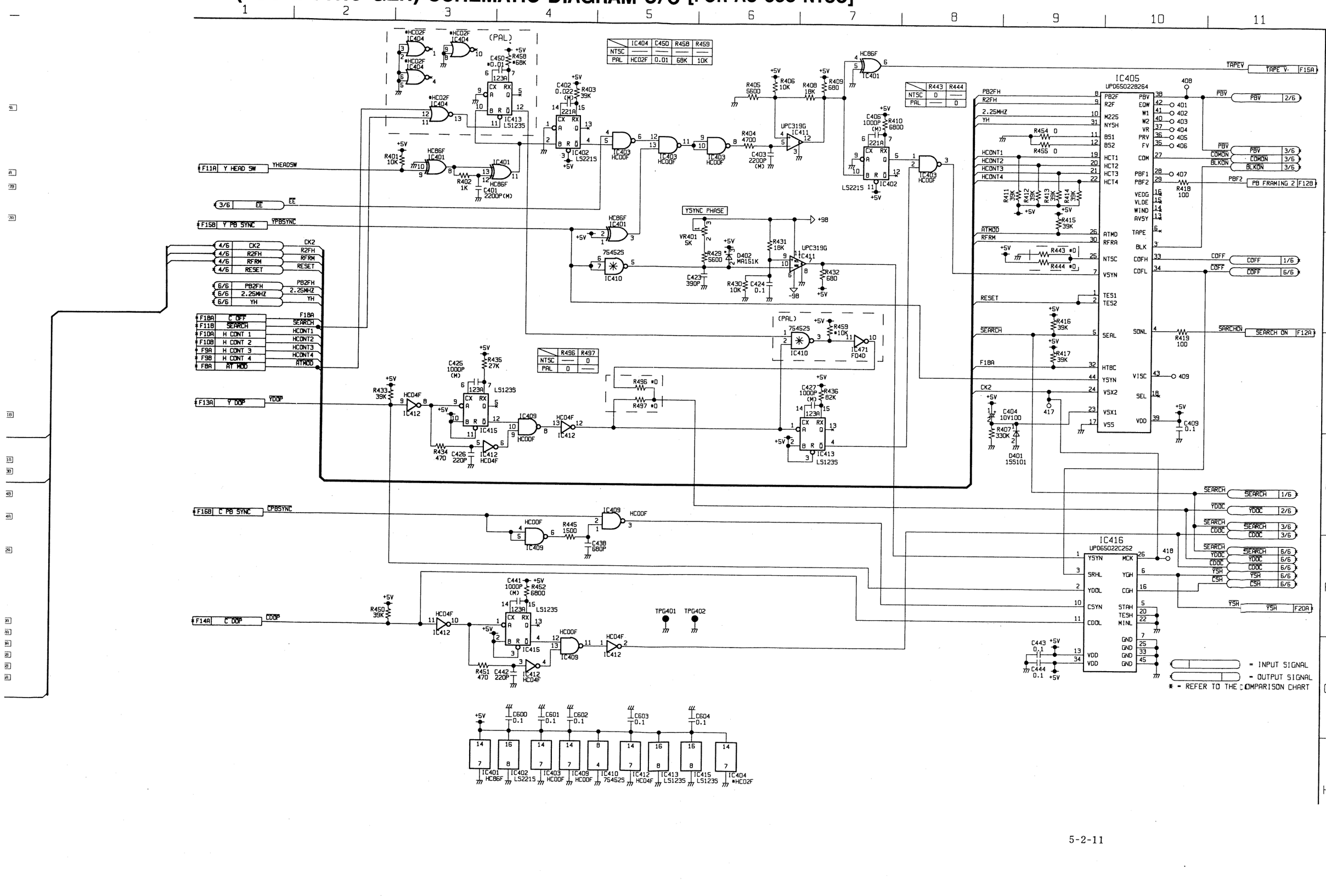

W1 (TBC & SYNC GEN) SCHEMATIC DIAGRAM 6/6 [FOR AU-665 NTSC

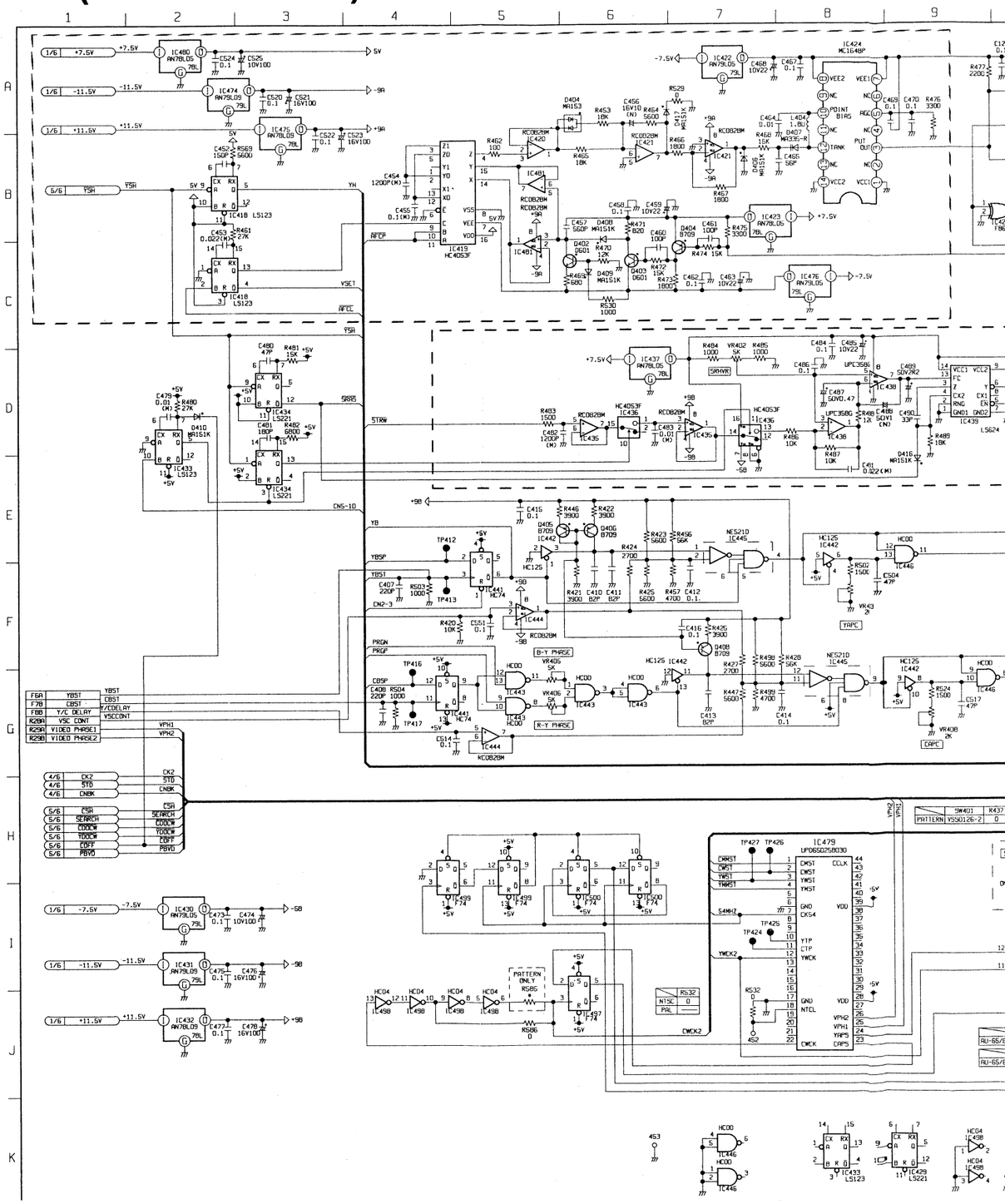

MODEL / TYPE	AU-665	AU-65	AU-63	AU-62
NTSC	VEP88077A	See Pages 5-2-6~5-2-8		
PAL	——			

[AU-665 NTSC]

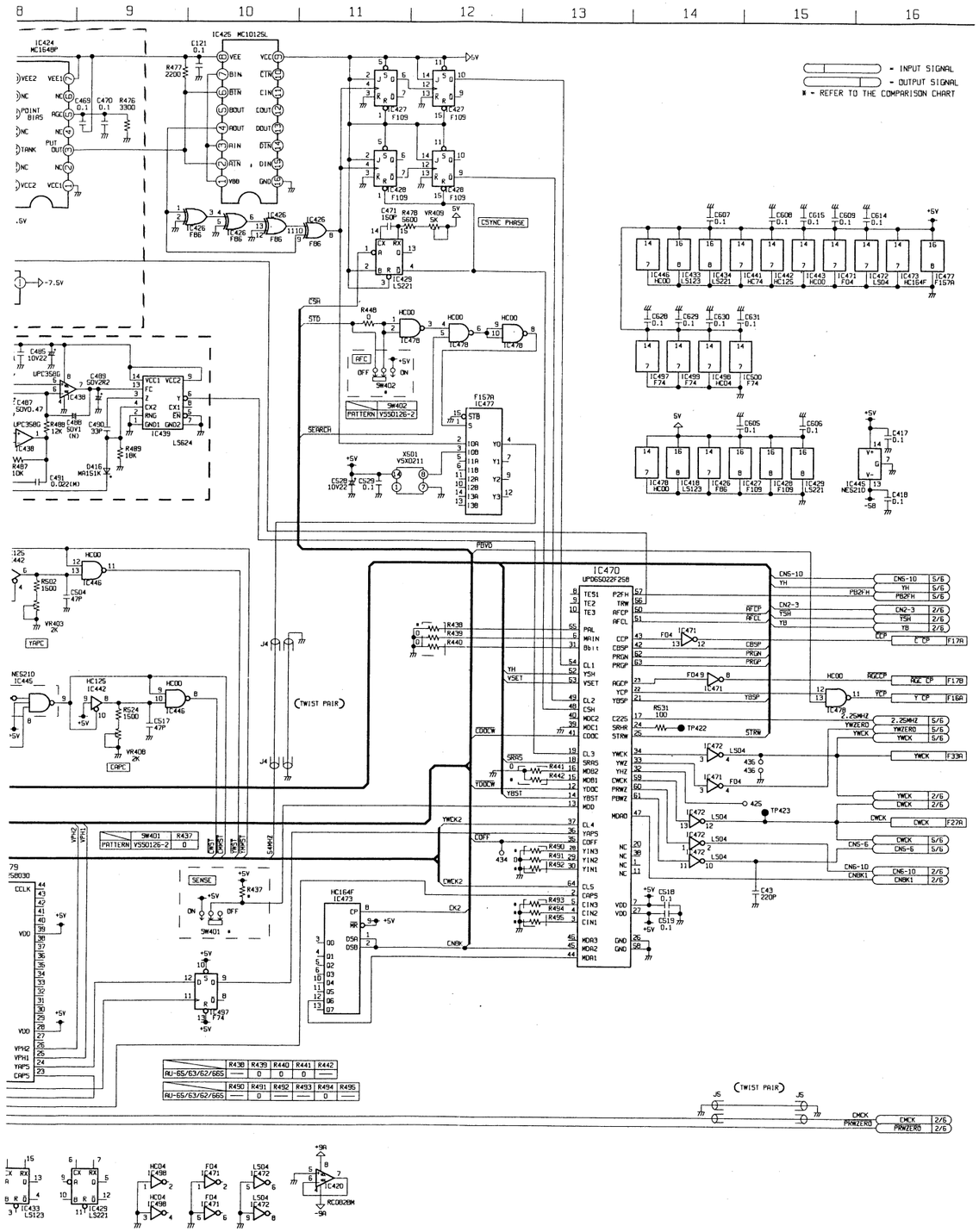

W2 SUB (9BIT A/D) SCHEMATIC DIAGRAM [FOR AU-665 NTSC]

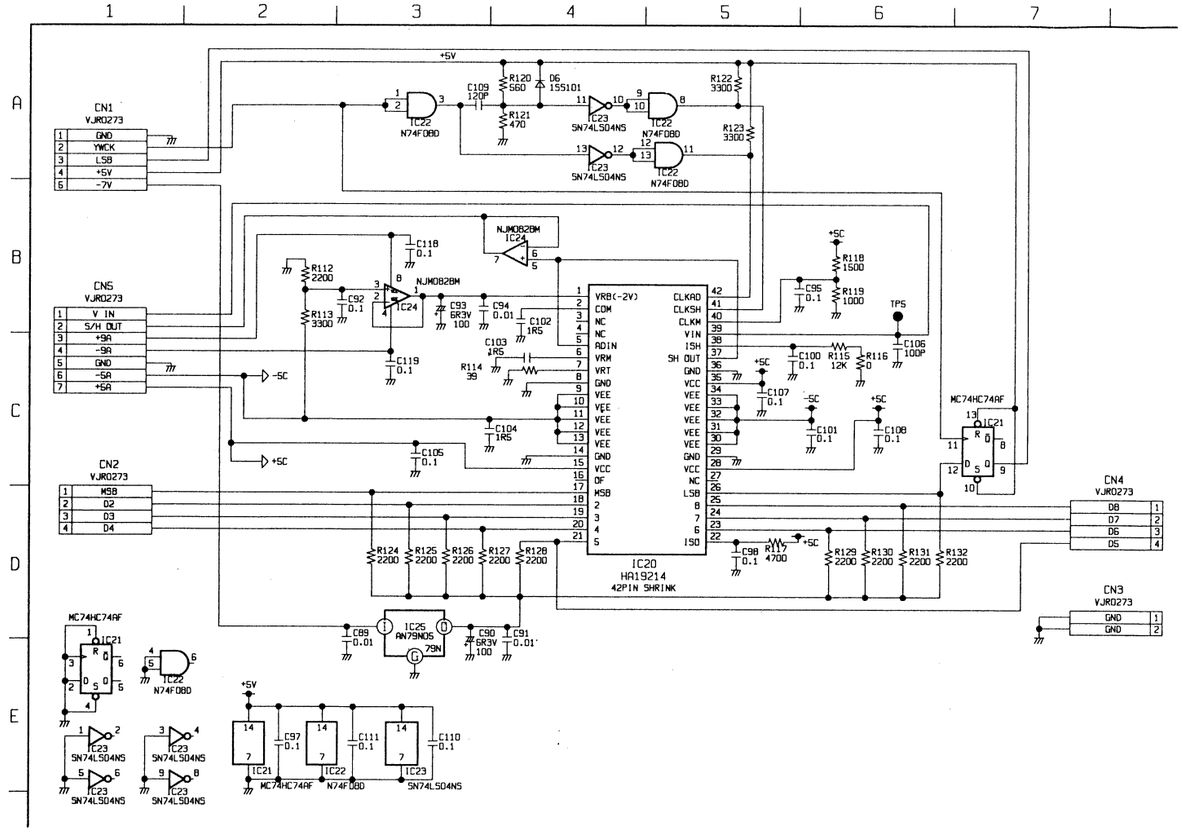

MODEL / TYPE	AU-665	AU-65	AU-63	AU-62
NTSC	VEP80569A	Not Used	Not Used	Not Used
PAL	Not Used	Not Used	Not Used	Not Used

W2 (ENCODER) SCHEMATIC DIAGRAM 1/4

MODEL / TYPE	AU-665
NTSC	VEP88063E
PAL	VEP88063E

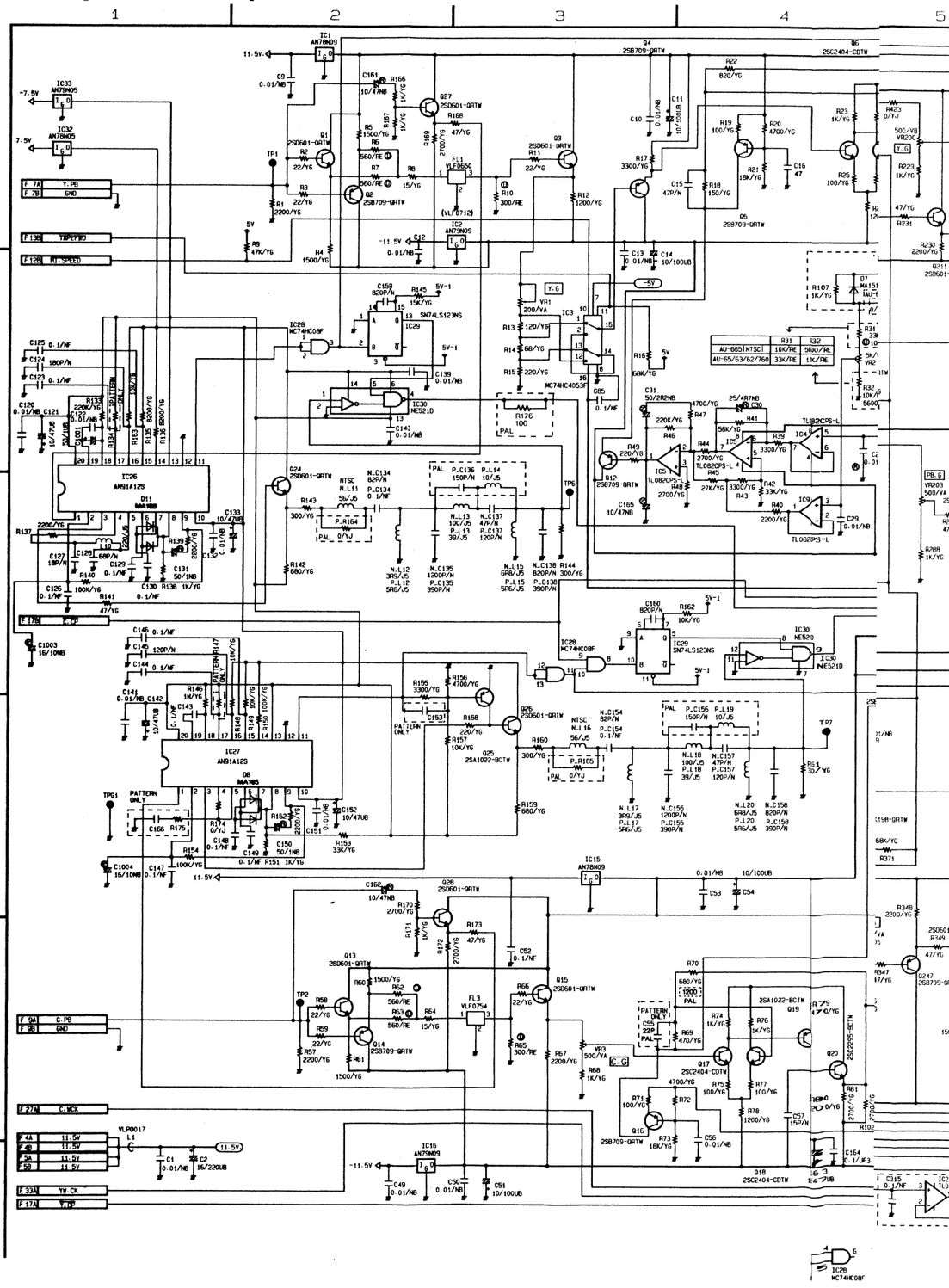

MODEL / TYPE	AU-665	AU-65	AU-63	AU-62
NTSC	VEP88063B	VEP88063A	VEP88063A	VEP88063A
PAL	VEP88063E	VEP88063C	VEP88063C	VEP88063C

W2 (ENCODER) SCHEMATIC DIAGRAM 2/4

= INPUT SIGNAL

= OUTPUT SIGNAL

N_= NTSC

P_= PAL

W2 (ENCODER) SCHEMATIC DIAGRAM 2/4

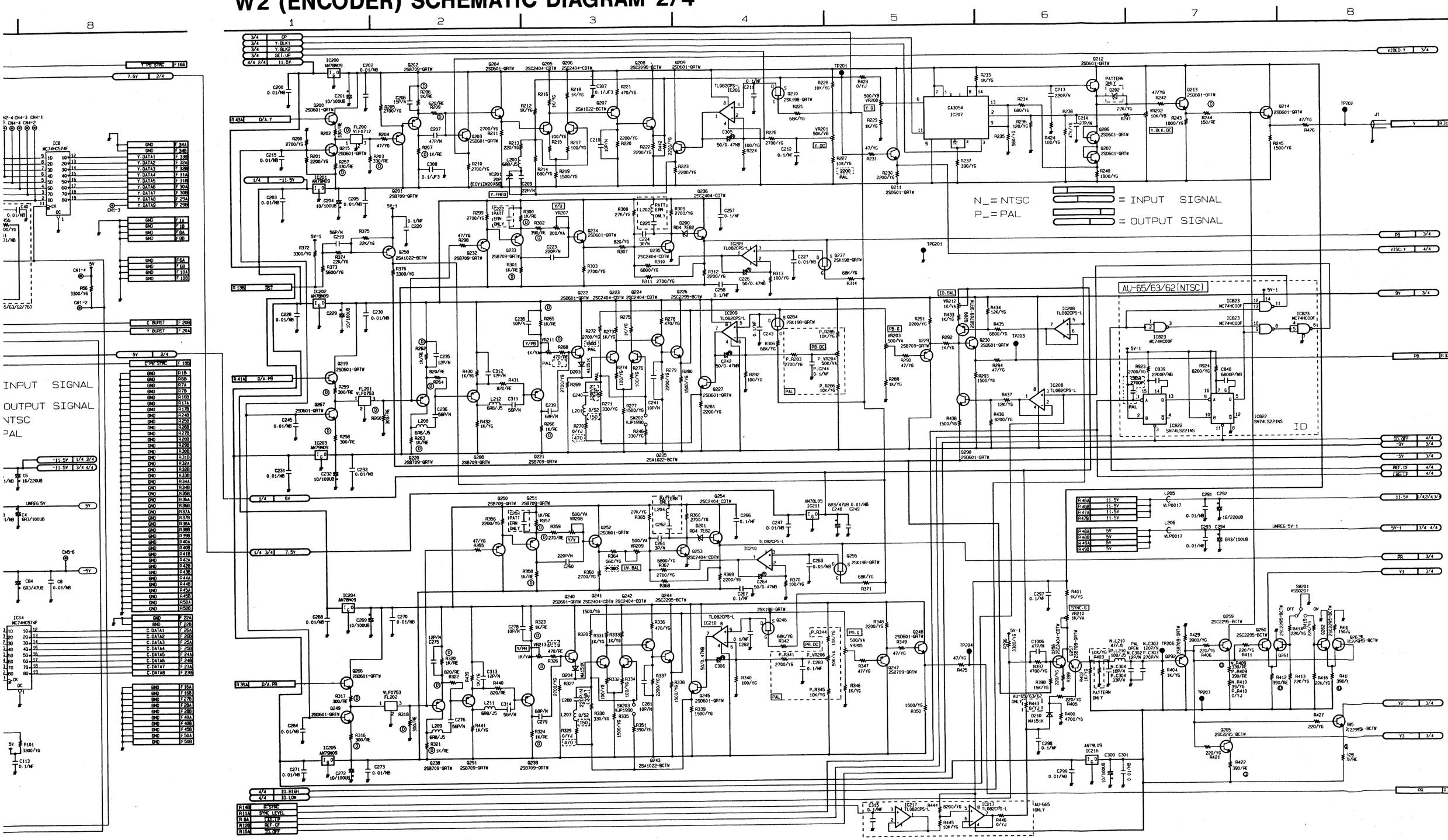

REVERSE SIDE ENCODER SCHEMATIC DIAGR

MODEL / TYPE	AU-665	AU-65	AU-63	AU-62
NTSC	VEP88063B	VEP88063A	VEP88063A	VEP88063A
PAL	VEP88063E	VEP88063C	VEP88063C	VEP88063C

W2 (ENCODER) SCHEMATIC DIAGRAM 3/4

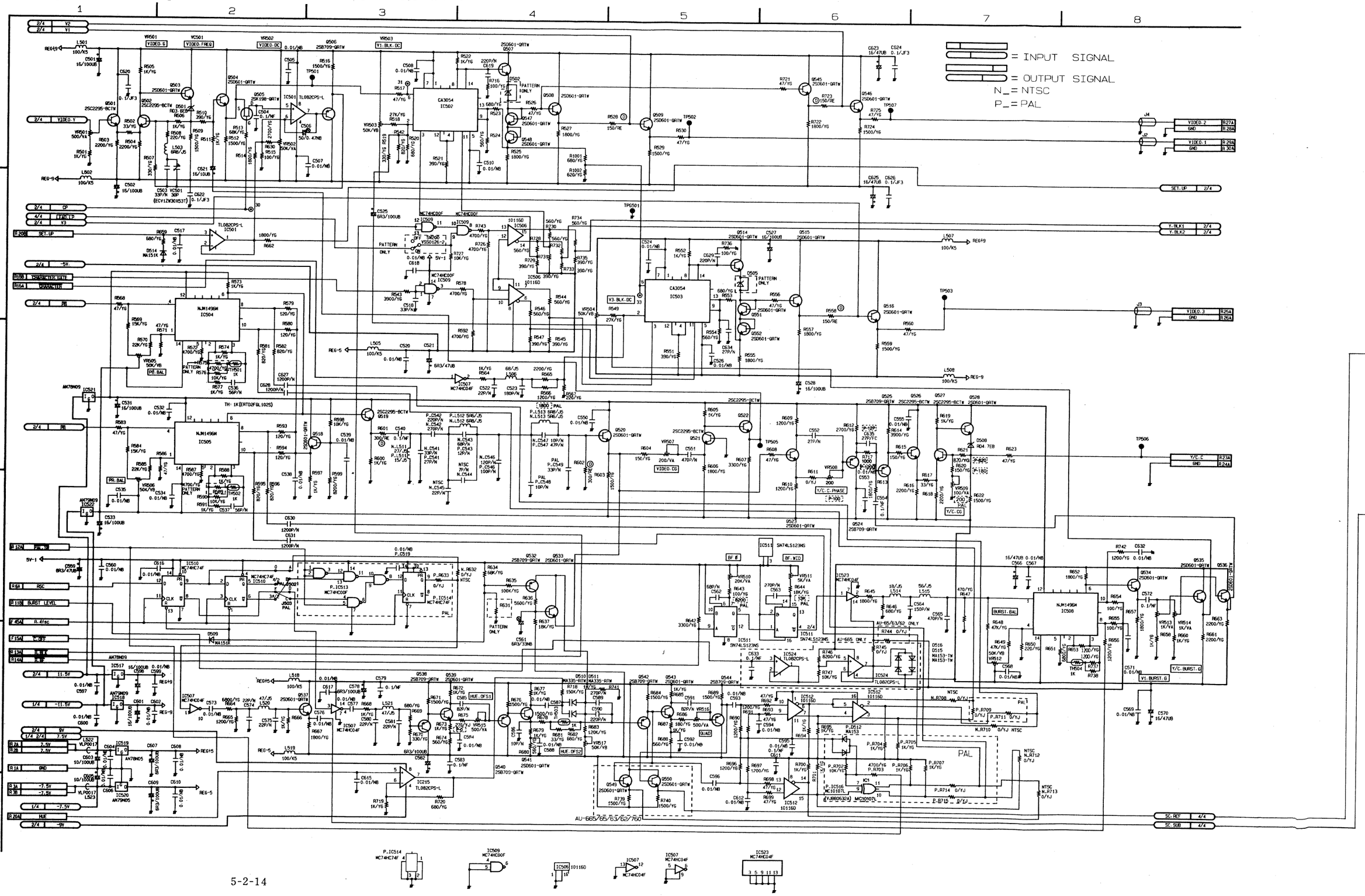

W2 (ENCODER) SCHEMATIC DIAGRAM 4/4[FOR AU-665]

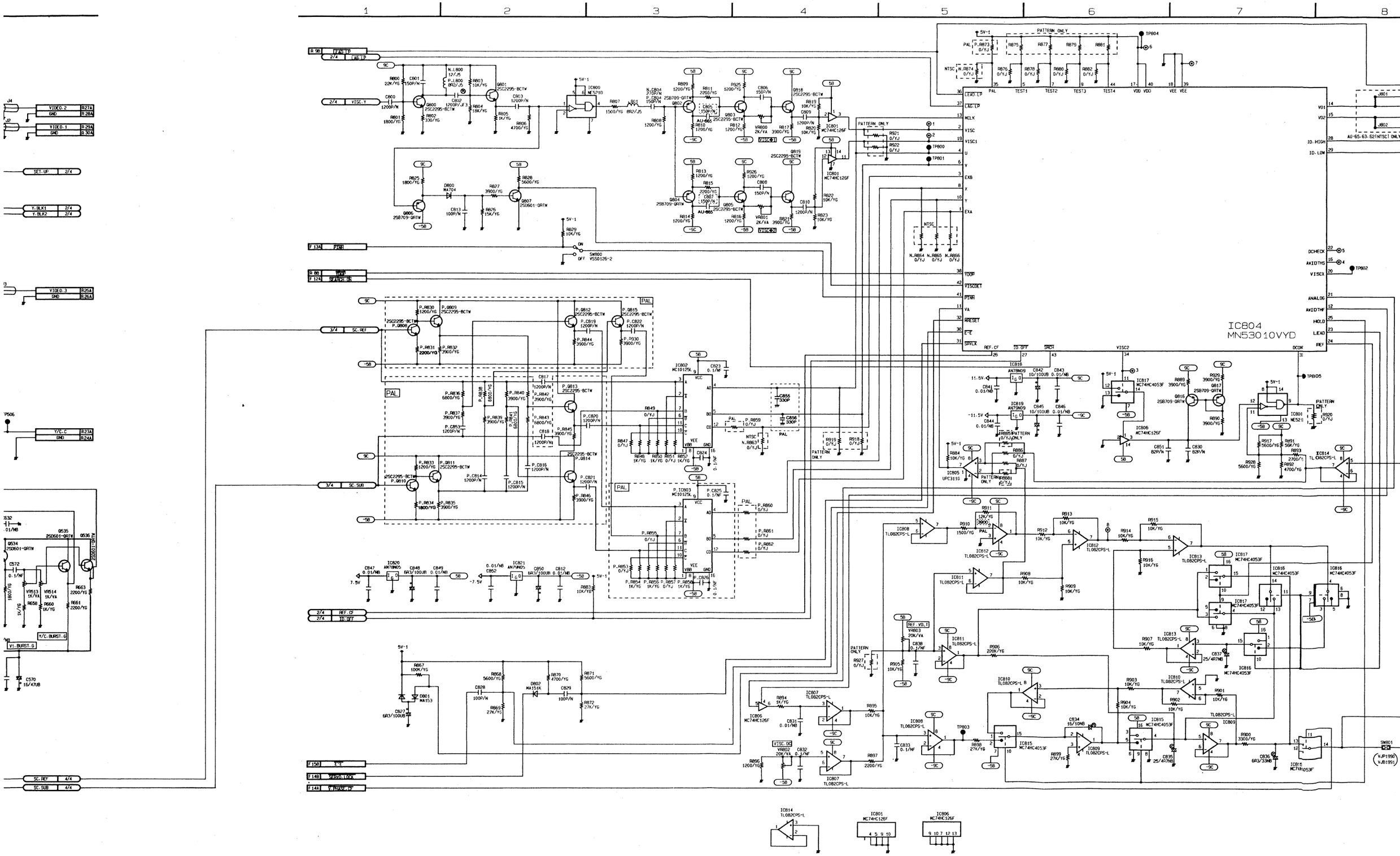

GRAM 4/4[FOR AU-665]

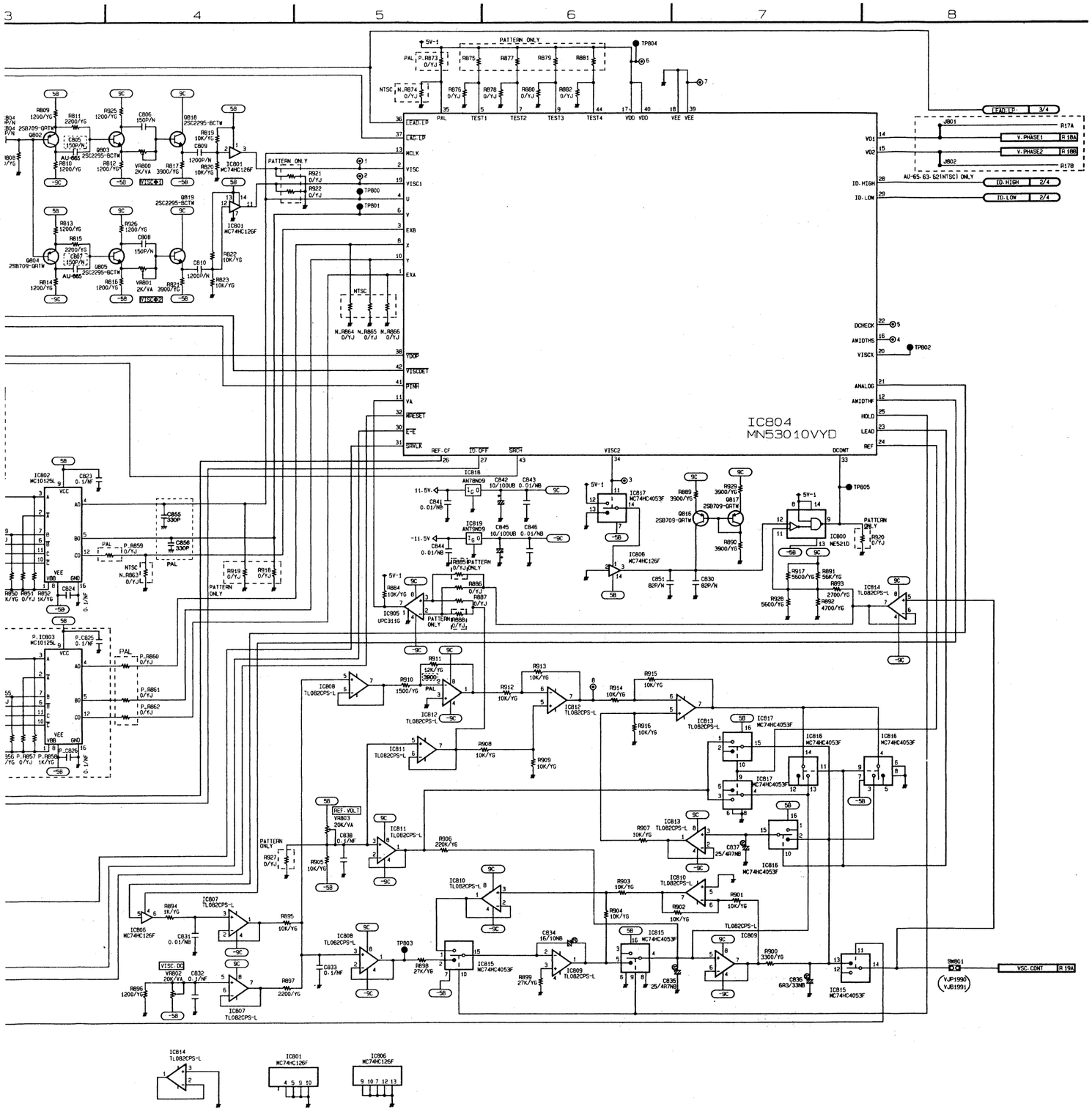

W3 (MODULATION & DEMODULATION) SCHEMATIC DIAGRAM 1/5

TYPE \ MODEL	AU-665	AU-65	AU-63	AU-62
NTSC	VEP83098B	VEP83098A	VEP83098D	VEP83098C
PAL	VEP83098H	VEP83098E	VEP83098F	VEP83098G

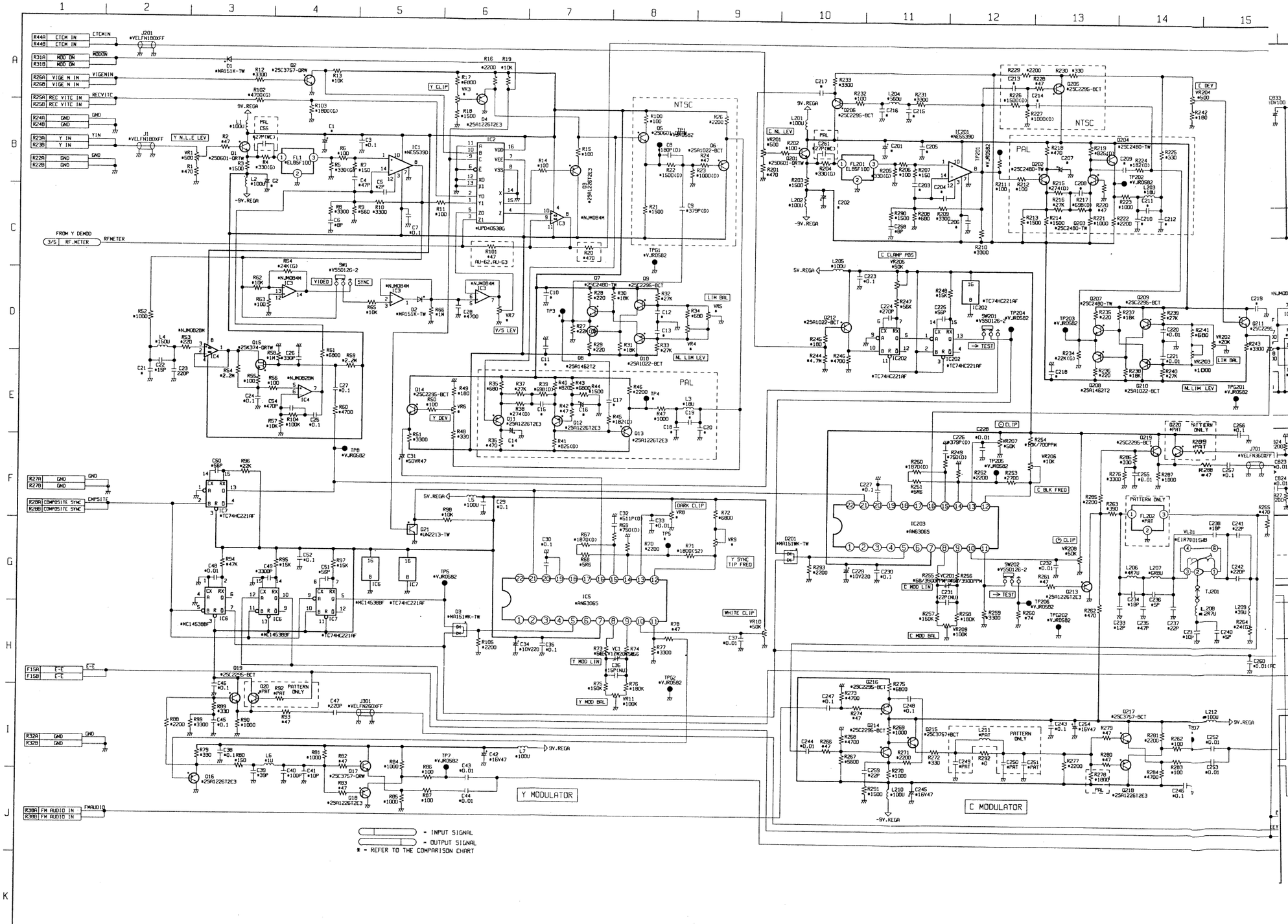

W3 (MODULATION & DEMODULATION) SCHEMATIC DIAGRAM 2/5

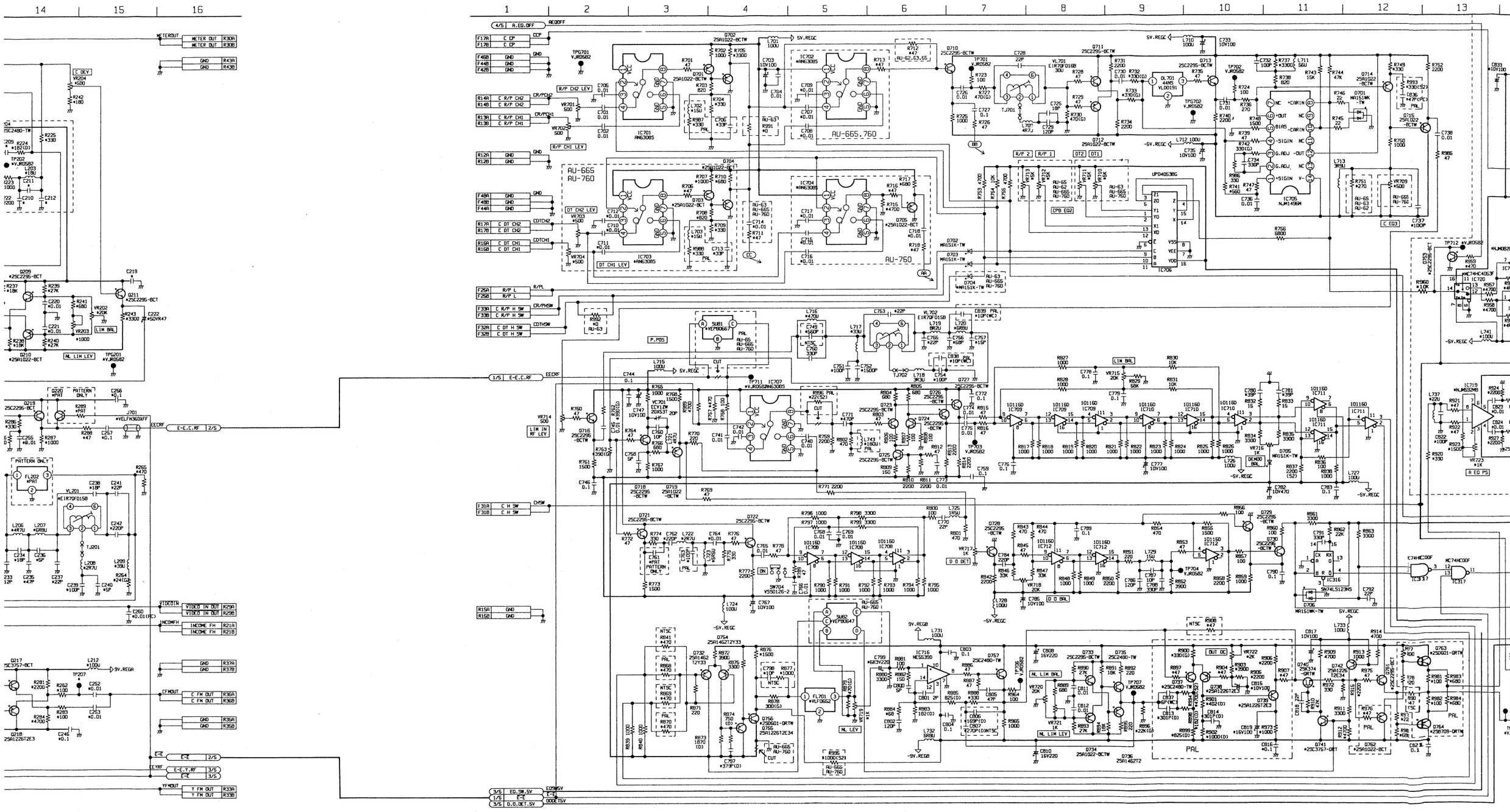
AU-665, 760
AU-665
AU-760
AU-665, 760
AU-665
AU-760
AU-63
AU-665
AU-760
AU-63
AU-665
AU-760
AU-63

ATION & DEMODULATION) SCHEMATIC DIAGRAM 2/5

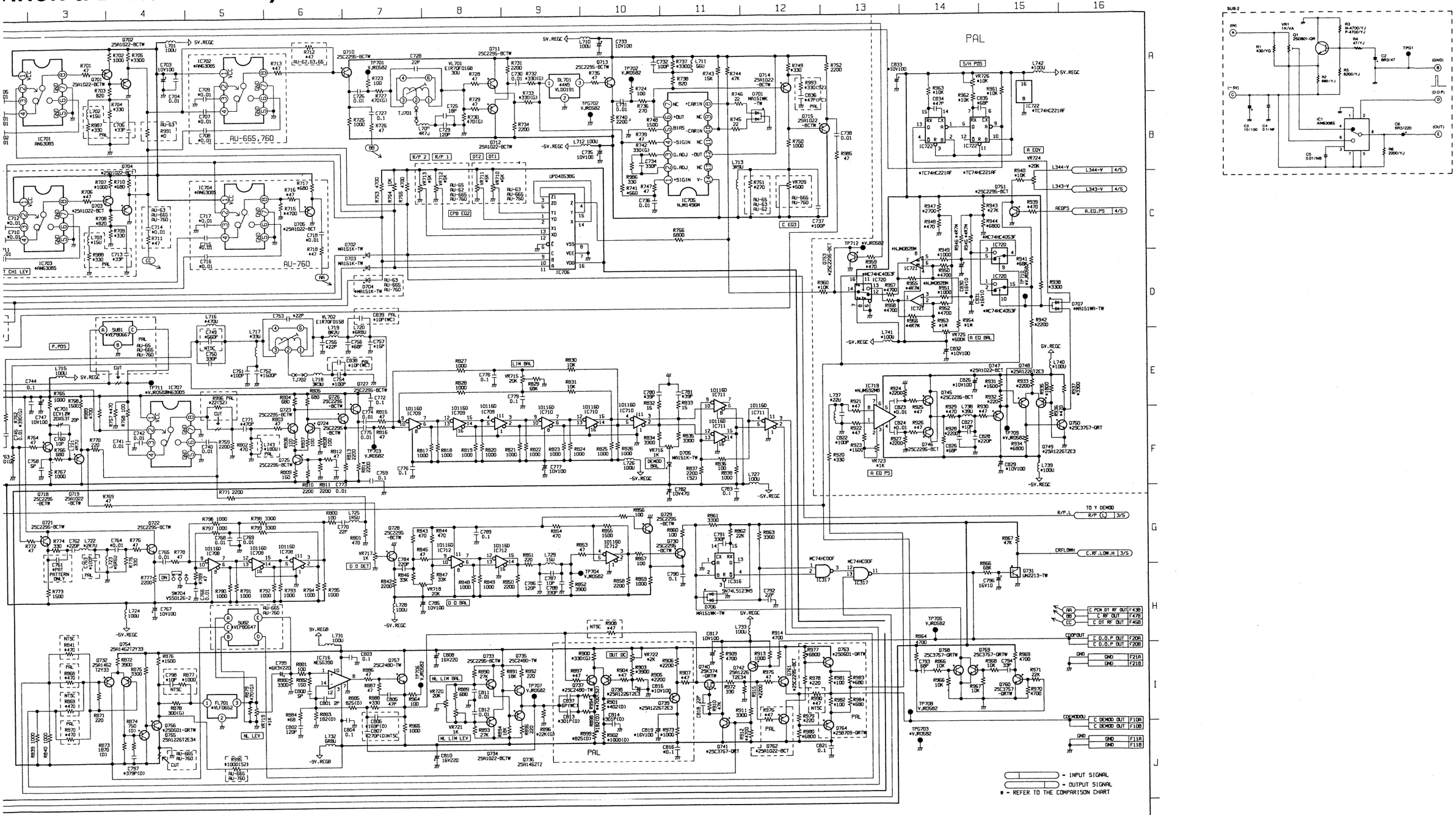

W3 (MODULATION & DEMODULATION) SCHEMATIC DIAGRAM 3/5

TYPE \ MODEL	AU-665	AU-65	AU-63	AU-62
NTSC	VEP83098B	VEP83098A	VEP83098D	VEP83098C
PAL	VEP83098H	VEP83098E	VEP83098F	VEP83098G

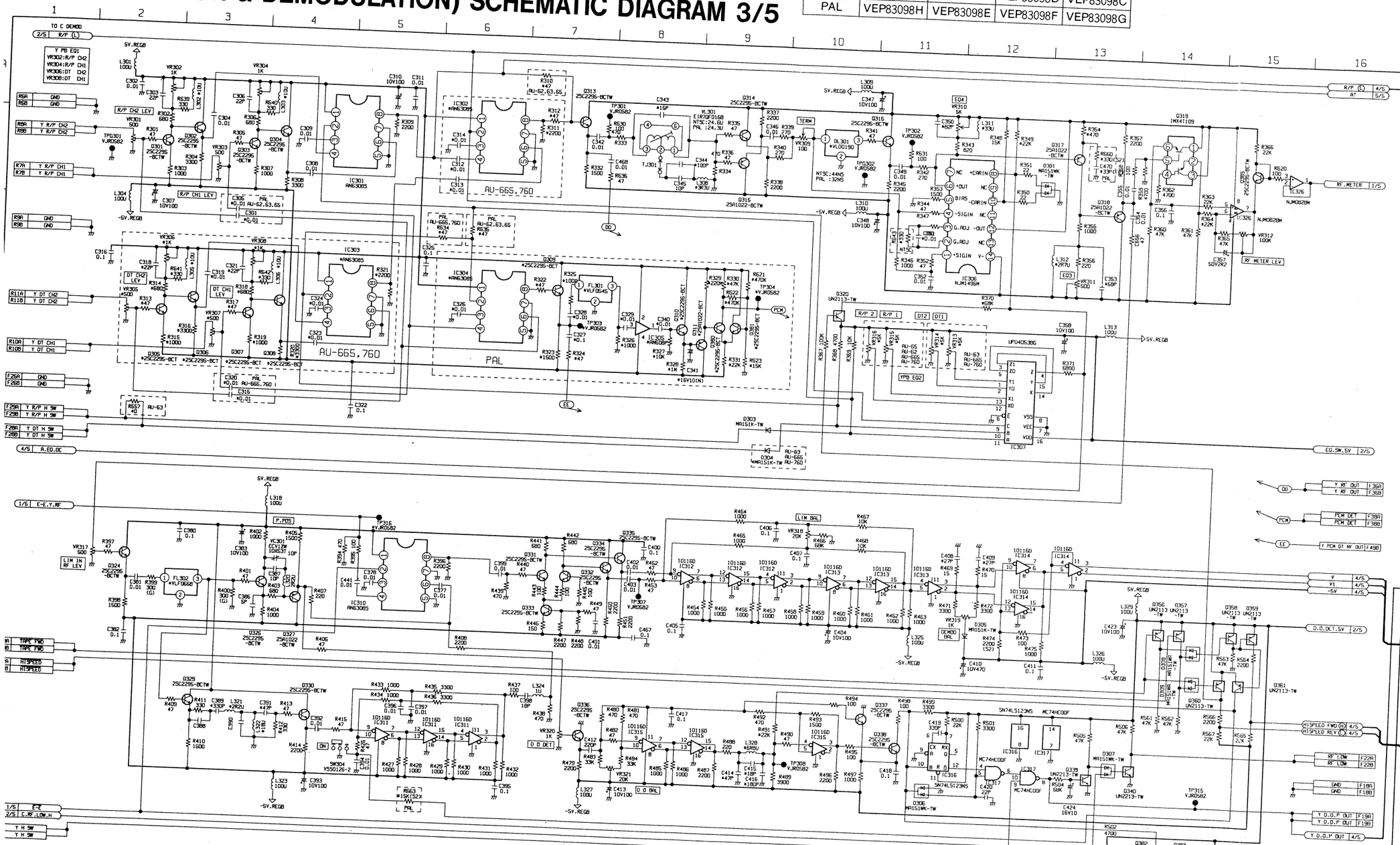
TO C DEMOD
2/S R/P (L)
5V.REGB
Y PB EQ1
VR302:R/P CH2
VR304:R/P CH1
VR306:DT CH2
VR308:DT CH1
R/P CH2 LEV
R/P CH1 LEV
DT CH2 LEV
DT CH1 LEV
AU-665,760
PAL
AU-62,63,65
AU-63
IC301 AN63085
IC302 *AN63085
IC303 *AN63085
IC304 *AN63085
IC305 NJM4558M
IC306 NJM2904M
IC307 LM1405JBG
IC316 SN74LS123NS
IC317 MC74HC00F
IC326 NJM082BM
D313 2SC2295-BCTW
D314 2SC2295-BCTW
D315 2SA1022-BCTW
D316 2SC2295-BCTW
D317 2SA1022-BCTW
D318 2SA1022-BCTW
D319 IMX41109
D320 UN2113-TW
D321 2SC2295-BCT
D322 2SC2295-BCT
D323 2SA1022-BCT
D324 2SC2295-BCTW
D325 2SC2295-BCTW
D326 2SC2295-BCTW
D327 2SA1022-BCTW
D328 2SC2295-BCTW
D329 2SC2295-BCTW
D330 2SC2295-BCTW
D331 2SC2295-BCTW
D332 2SC2295-BCTW
D333 2SC2295-BCTW
D334 2SC2295-BCTW
D335 2SC2295-BCTW
D336 2SC2295-BCTW
D337 2SC2295-BCTW
D338 2SC2295-BCTW
D339 2SC2295-BCTW
D340 UN2213-TW
D341 2SA1462T
D342 2SD757-QRTW
D343 2SC3757-QRTW
D344 2SC3757-QRTW
D345 2SC3757-QRTW
D346 2SC3757-QRTW
D347 2SC3757-QRTW
D348 2SC3757-QRTW
D349 2SC3757-QRTW
D350 2SC3757-QRTW
D351 2SC3757-QRTW
D352 2SC3757-QRTW
D353 2SC3757-QRTW
D354 2SC3757-QRTW
D355 2SC3757-QRTW
D356 UN2113-TW
D357 UN2113-TW
D358 UN2113-TW
D359 UN2113-TW
D360 UN2113-TW
D361 UN2113-TW
D362 UN2113-TW
D363 UN2113-TW
D364 UN2113-TW
D365 UN2113-TW
D366 UN2113-TW
D367 UN2113-TW
D368 UN2113-TW
D369 UN2113-TW
D370 UN2113-TW
D371 UN2113-TW
D372 UN2113-TW
D373 UN2113-TW
D374 UN2113-TW
D375 UN2113-TW

W3 (MODULATION & DEMODULATION) SCHEMATIC DIAGRAM 4/5

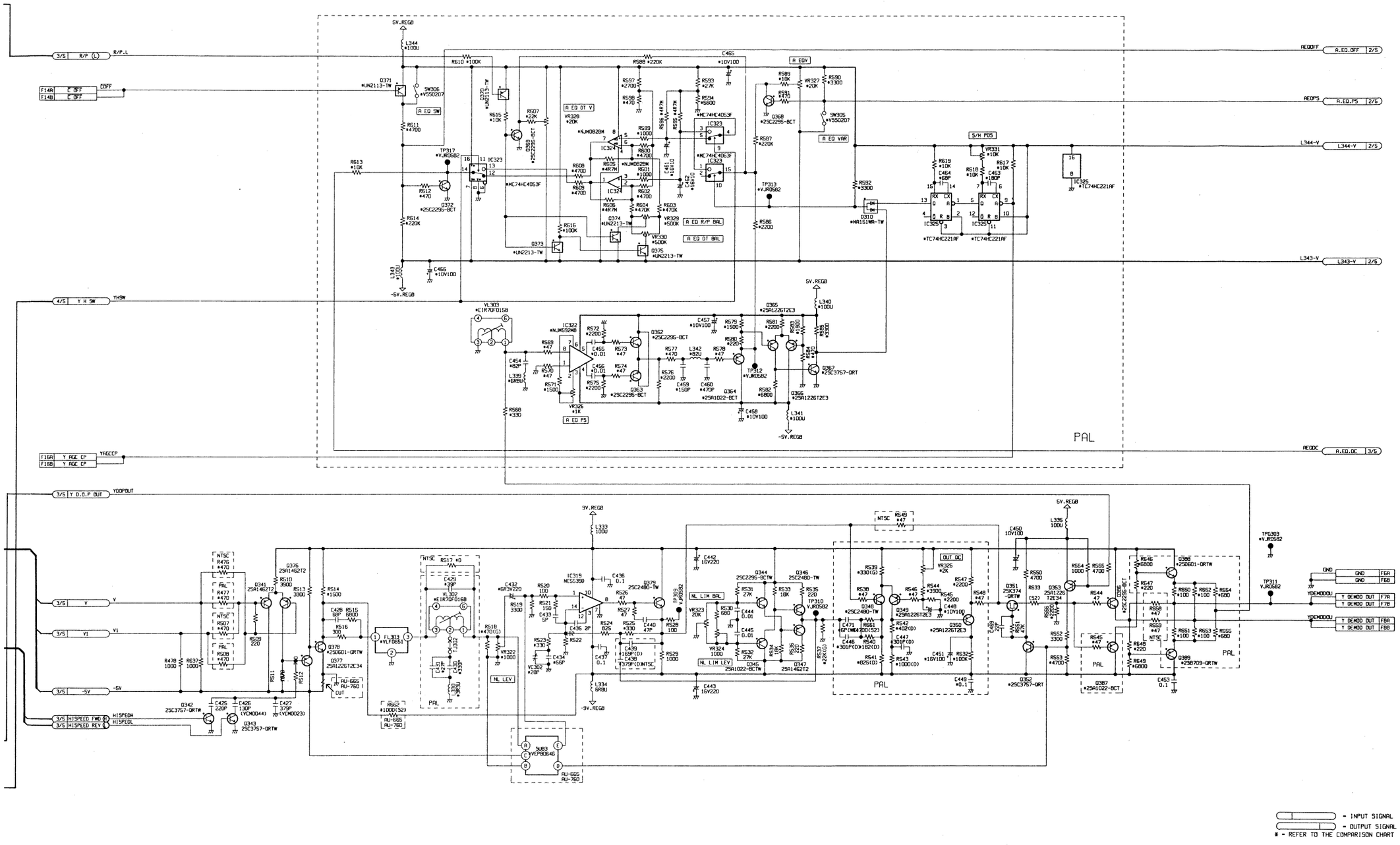

W3 (MODULATION

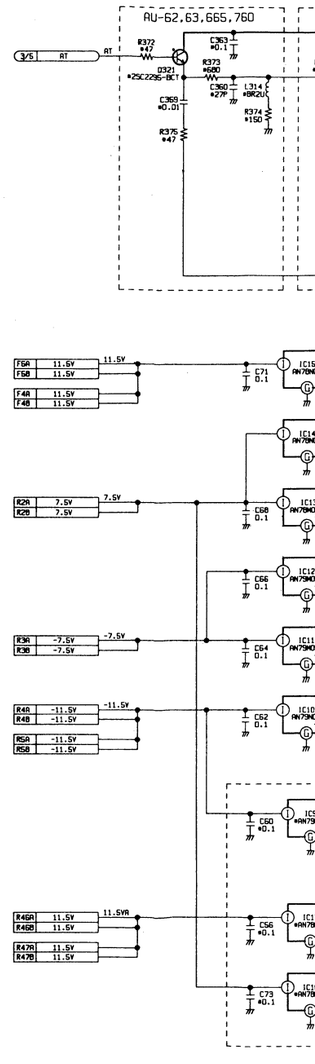

AM 4/5

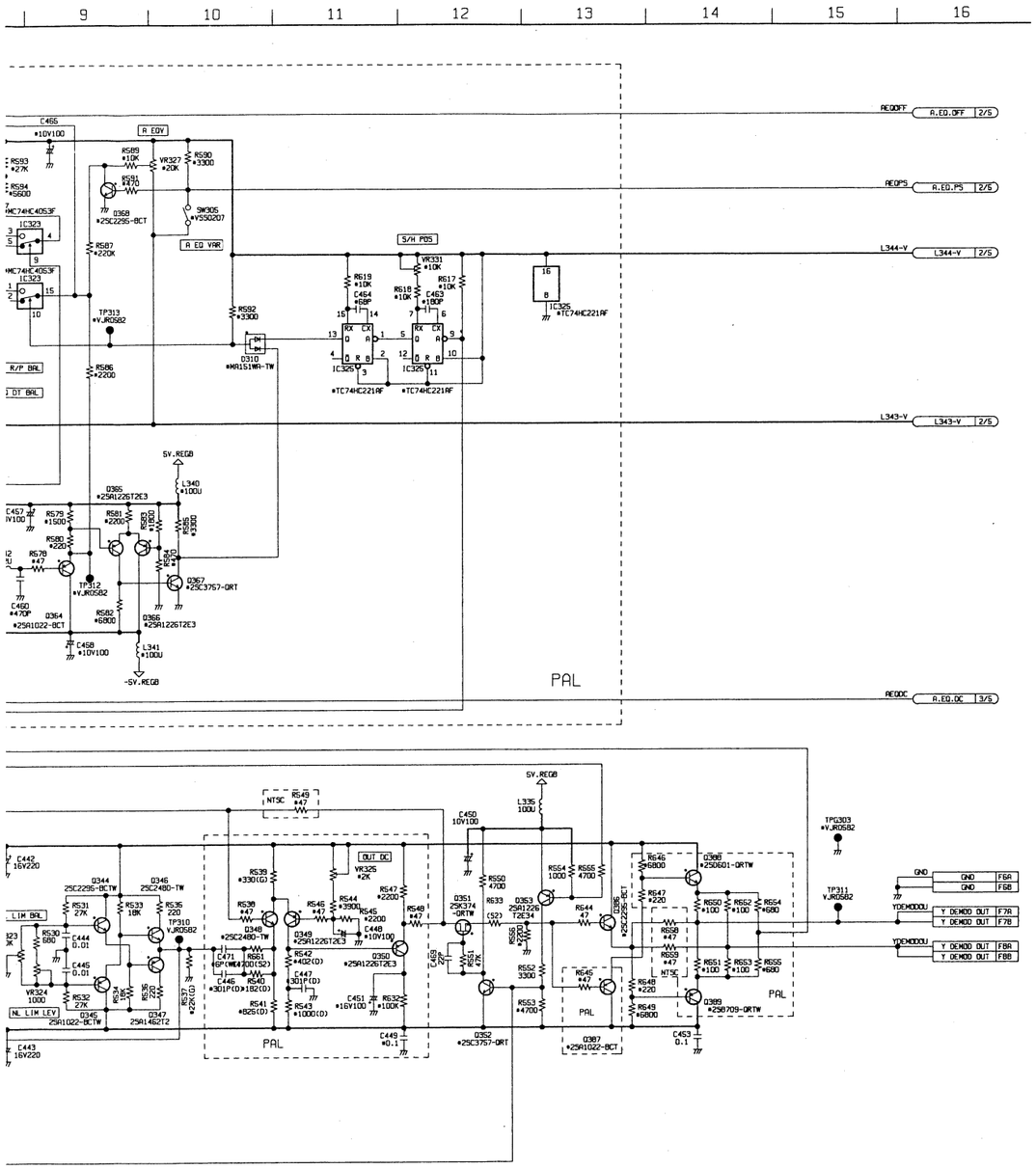

W3 (MODULATION & DEMODULATION) SCHEMATIC DIAGRAM 5/5

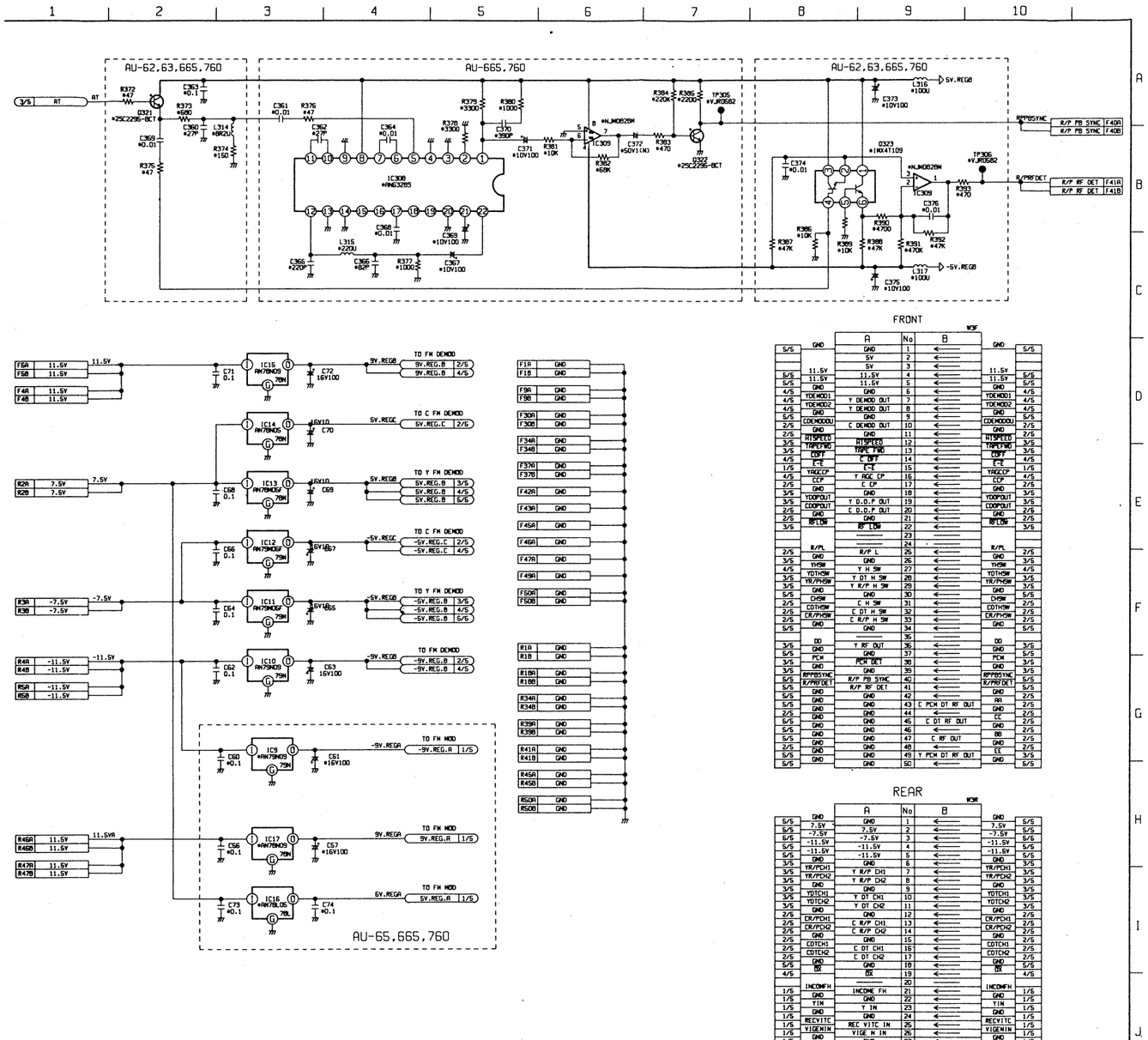

W4 (DECODER & CTCM) SCHEMATIC DIAGRAM 1/4 [FOR AU-665 NTSC, AU-65]

TYPE \ MODEL	AU-665	AU-65	AU-63	AU-62
NTSC	VEP83099A	VEP83099A	Not Used	Not Used
PAL	———	VEP83099B	Not Used	Not Used

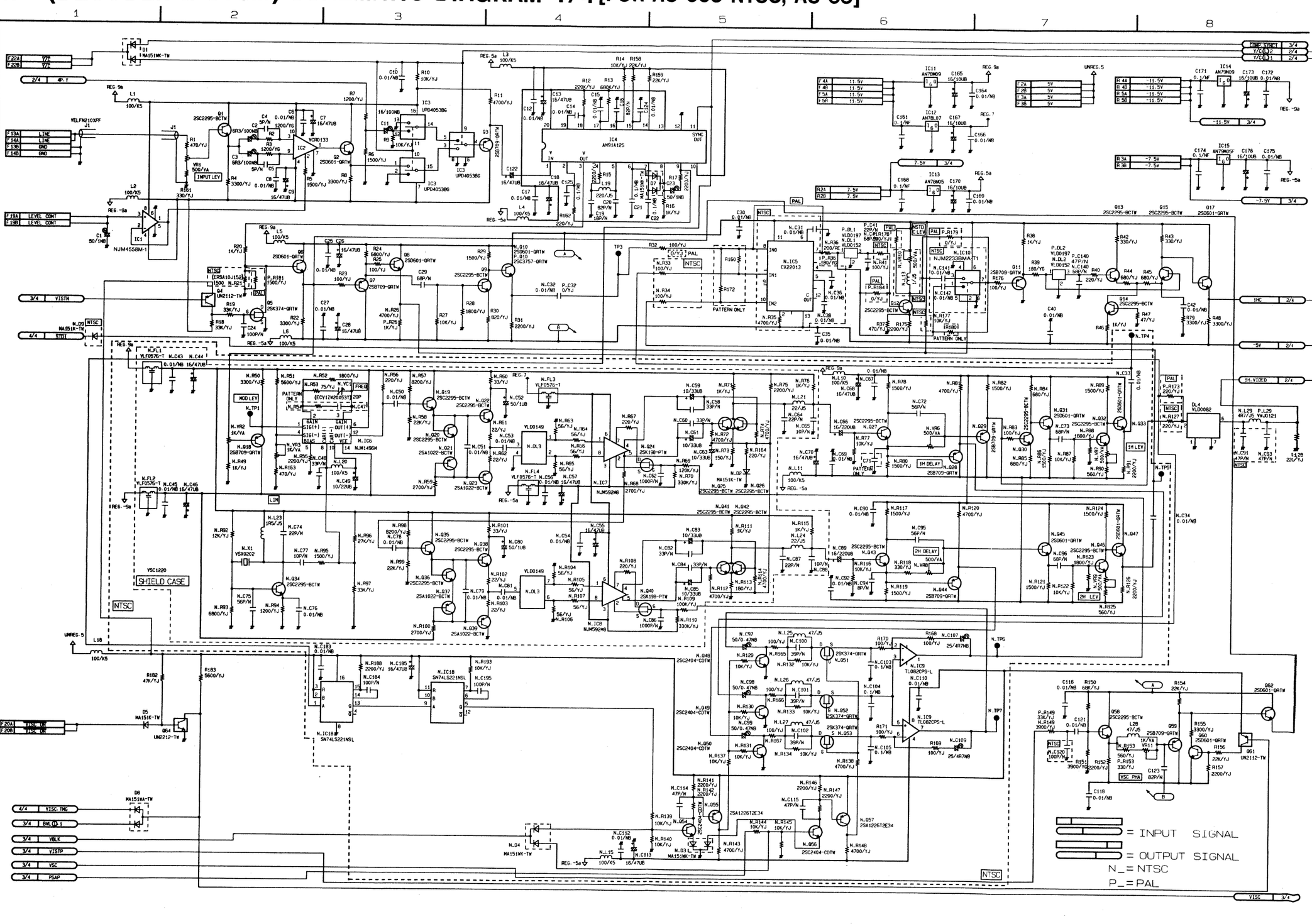

W4 (DECODER & CTCM) SCHEMATIC DIAGRAM 2/4 [FOR AU-665 NTSC, AU-65]

1 2 3 4 5 6 7 8

= INPUT SIGNAL

= OUTPUT SIGNAL

N_ = NTSC

P_ = PAL

HEMATIC DIAGRAM 2/4 [FOR AU-665 NTSC, AU-65]

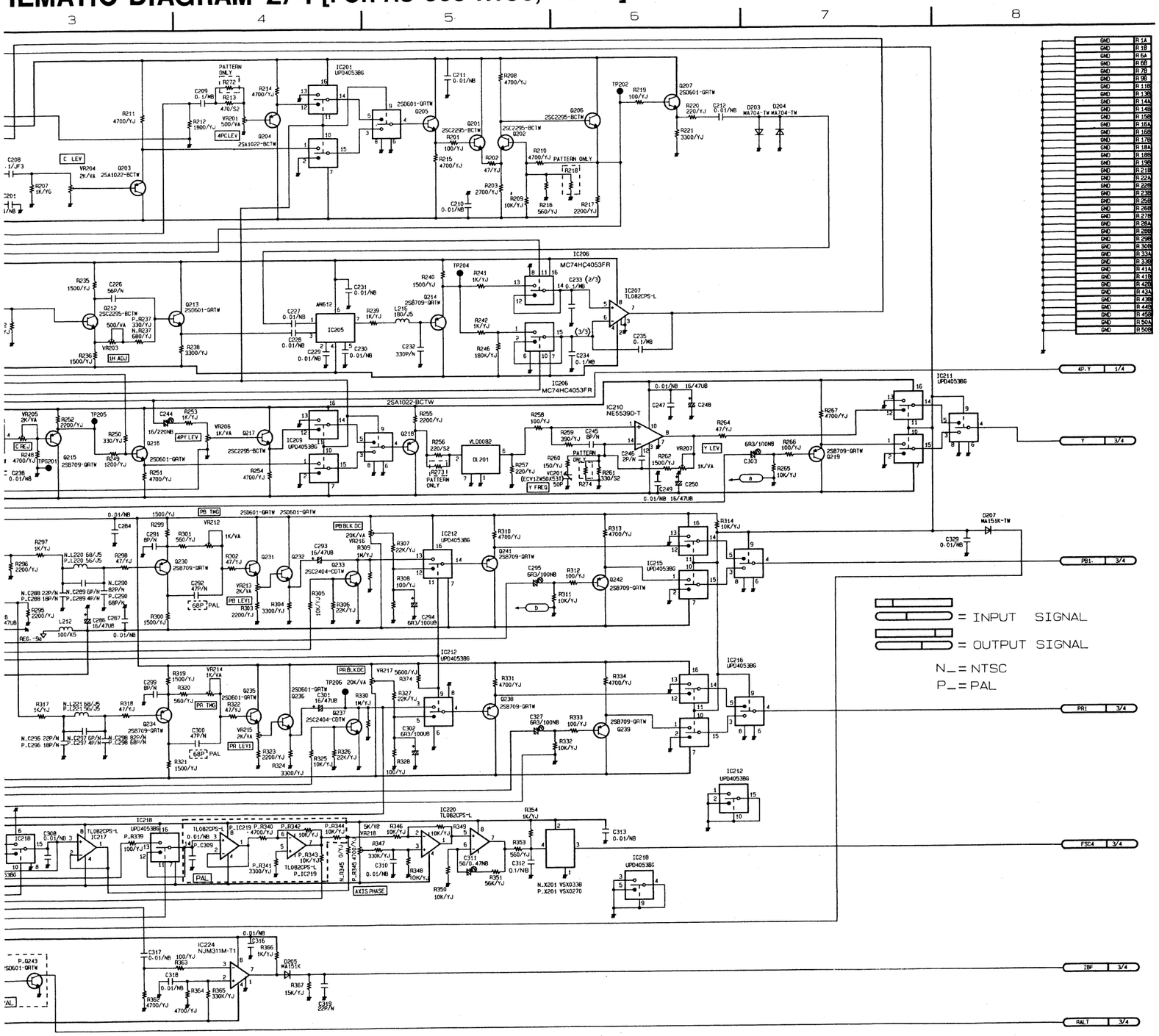

FRONT

A	VJP28988100	B
GND	1	
5V	2	
5V	3	
11.5V	4	
11.5V	5	
GND	6	
GND	7	
GND	8	
GND	9	
GND	10	
	11	GND
GND	12	GND
LINE	13	GND
LINE	14	GND
	15	
	16	
	17	
	18	
GND	19	
LEVEL CONT	20	
VISC ON	21	
LINE	22	
Y/C	23	
GND	24	
	25	
	26	
	27	
	28	
	29	
	30	
	31	
	32	
	33	
	34	
	35	
	36	
GND	37	
4P Y	38	GND
GND	39	
4P C	40	GND
GND	41	
GND	42	
GND	43	
GND	44	
GND	45	
GND	46	
GND	47	
GND	48	
GND	49	
GND	50	

REAR

A	VJP28988100	B
GND	1	
7.5V	2	
-7.5V	3	
-11.5V	4	
-11.5V	5	
GND	6	
BNC Y	7	GND
GND	8	
BNC PB	9	GND
GND	10	
BNC PR	11	GND
GND	12	
	13	GND
GND	14	
	15	GND
GND	16	
	17	GND
GND	18	
	19	GND
	20	
	21	GND
GND	22	
Y	23	GND
GND	24	
VIDE	25	GND
VIDE N	26	GND
COMP SYNC	27	GND
GND	28	GND
DUB Y DOP	29	GND
DUB C DOP	30	GND
	31	
	32	
GND	33	GND
IN SCH	34	N-STD AUTO
CPNT OF ON	35	STD
LINE OF	36	CPNT OF
VP REC	37	C CLAMP
DUB	38	VIDEO IN
	39	
	40	
GND	41	
DUB CTCM	42	GND
GND	43	
CTCM	44	GND
GND	45	
14.5V	46	
11.5V	47	
5V	48	
5V	49	
GND	50	

TYPE \ MODEL	AU-665	AU-65	AU-63	AU-62
NTSC	VEP83099A	VEP83099A	Not Used	Not Used
PAL	———	VEP83099B	Not Used	Not Used

W4 (DECODER & CTCM) SCHEMATIC DIAGRAM 3/4 [FOR AU-665 NTSC, AU-65]

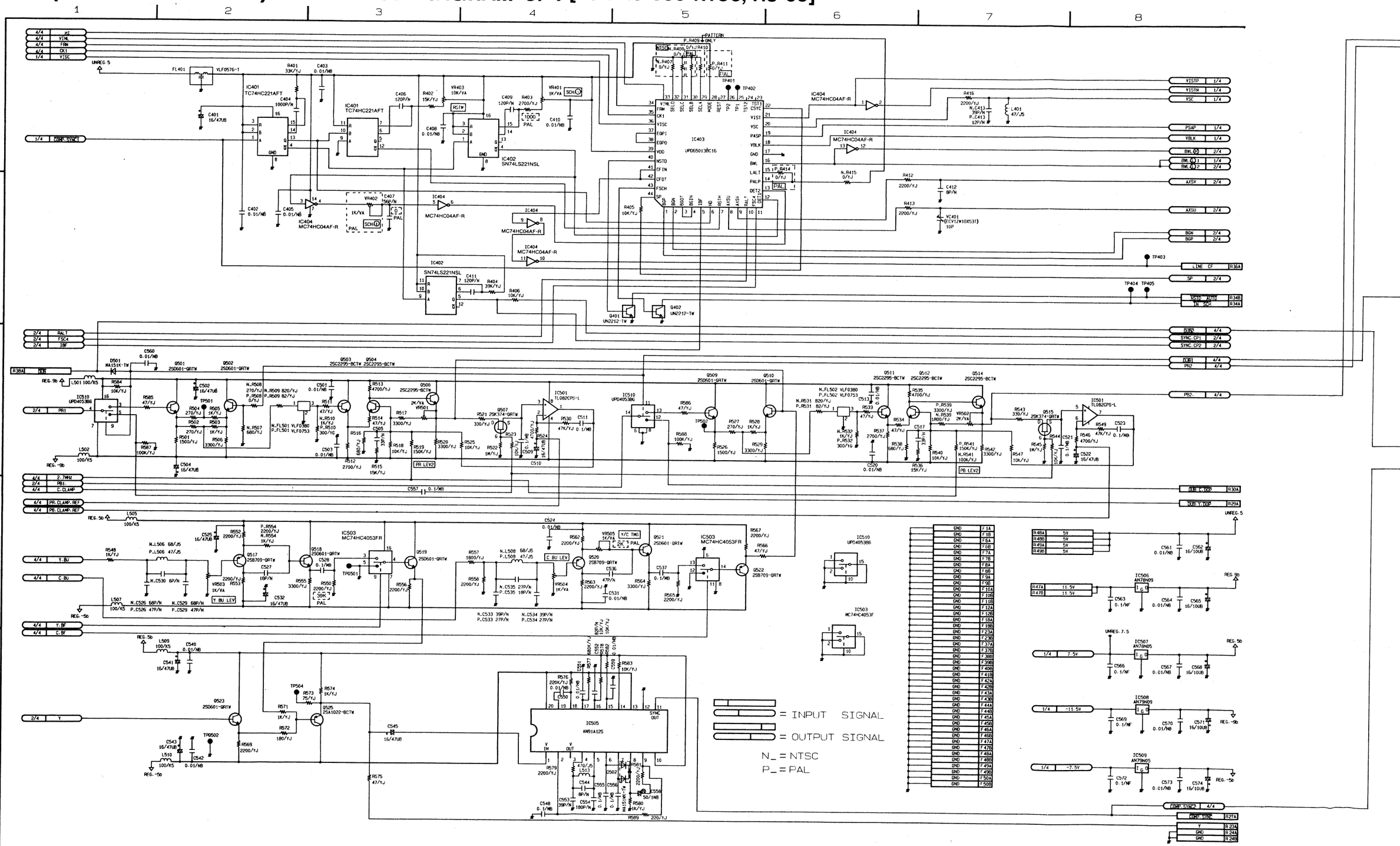

W4 (DECODER & CTCM) SCHEMATIC DIAGRAM 4/4 [FOR AU-665 NTSC, AU-65]

N_ = NTSC
P_ = PAL

= INPUT SIGNAL

= OUTPUT SIGNAL

IC713
UPD65013FC25

C DIAGRAM 4/4 [FOR AU-665 NTSC, AU-65]

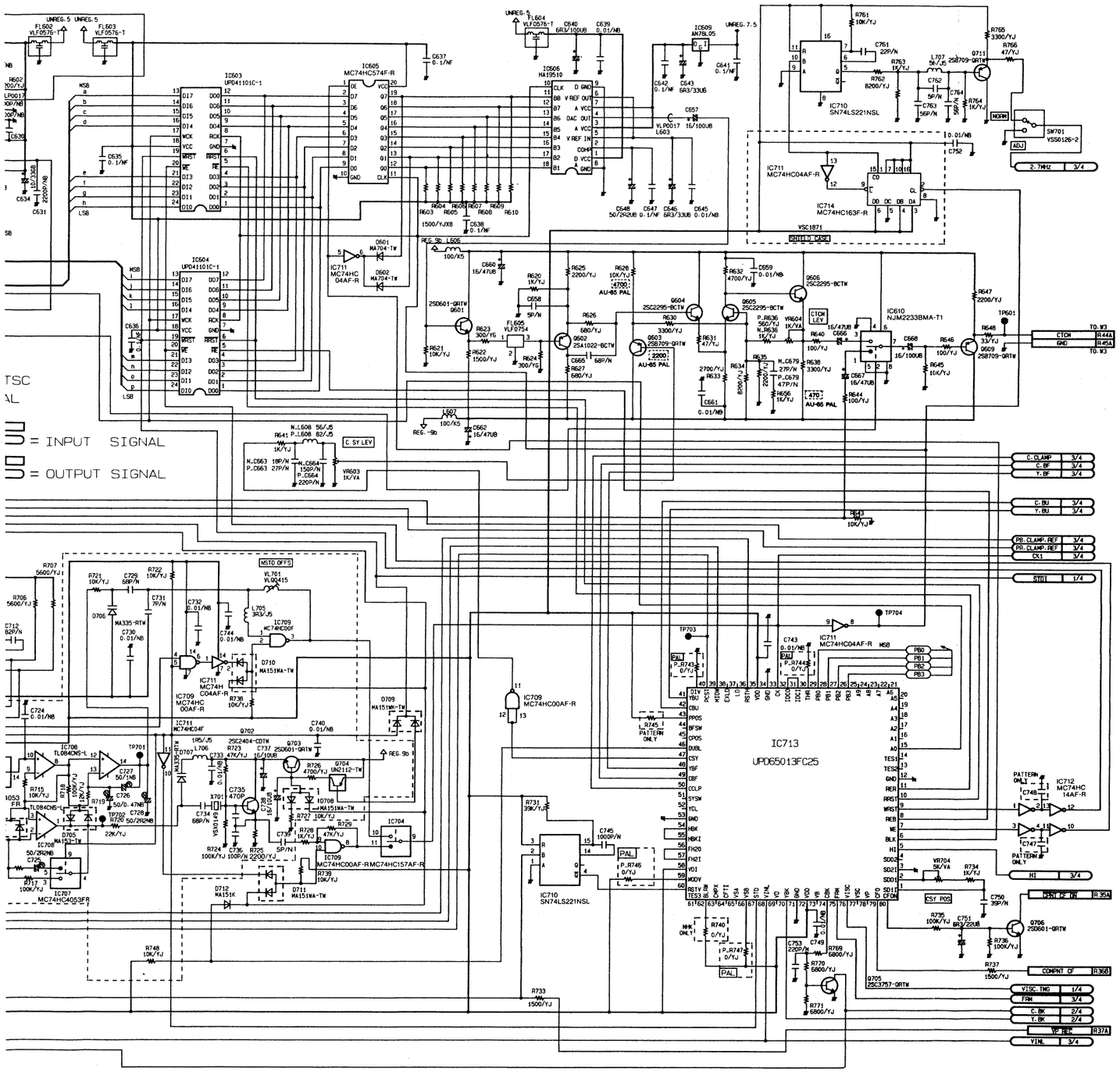

FRONT

A	VJP2898B100	B
GND	1	
5V	2	
5V	3	
11.5V	4	
11.5V	5	
GND	6	
GND	7	
GND	8	
GND	9	
GND	10	
	11	GND
GND	12	GND
LINE	13	GND
LINE	14	GND
	15	
	16	
	17	
GND	18	
LEVEL CONT	19	
VISC ON	20	
LINE	21	
7.7C	22	
GND	23	
	24	
	25	
	26	
	27	
	28	
	29	
	30	
	31	
	32	
	33	
	34	
	35	
	36	
GND	37	
4P Y	38	GND
GND	39	
4P C	40	GND
GND	41	
GND	42	
GND	43	
GND	44	
GND	45	
GND	46	
GND	47	
GND	48	
GND	49	
GND	50	

REAR

A	VJP2898B100	B
GND	1	
7.5V	2	
-7.5V	3	
-11.5V	4	
-11.5V	5	
GND	6	
BNC Y	7	GND
GND	8	
BNC PB	9	GND
GND	10	
BNC PR	11	GND
GND	12	
	13	GND
GND	14	
	15	GND
GND	16	
	17	GND
GND	18	
	19	GND
	20	
	21	GND
GND	22	
Y	23	GND
GND	24	
VIGE	25	GND
VIGE N	26	GND
COMP SYNC	27	GND
GND	28	GND
DUB Y DOP	29	GND
DUB C DOP	30	GND
	31	
	32	
GND	33	GND
IN SCH	34	N-STD AUTO
CONT OF ON	35	STD
LINE CF	36	COPNT CF
VP REC	37	C CLAMP
DUB	38	VIDEO IN
	39	
	40	
GND	41	
GND	42	GND
GND	43	
CTCH	44	GND
GND	45	
14.5V	46	
11.5V	47	
5V	48	
5V	49	
GND	50	

TYPE \ MODEL	AU-665	AU-65	AU-63	AU-62
NTSC	VEP82061B	VEP82061A	VEP82061D	VEP82061C
PAL	VEP82061G	VEP82061E	VEP82061F	VEP82061E

W5 (SERVO) SCHEMATIC DIAGRAM 1/8 (DRUM SERVO)

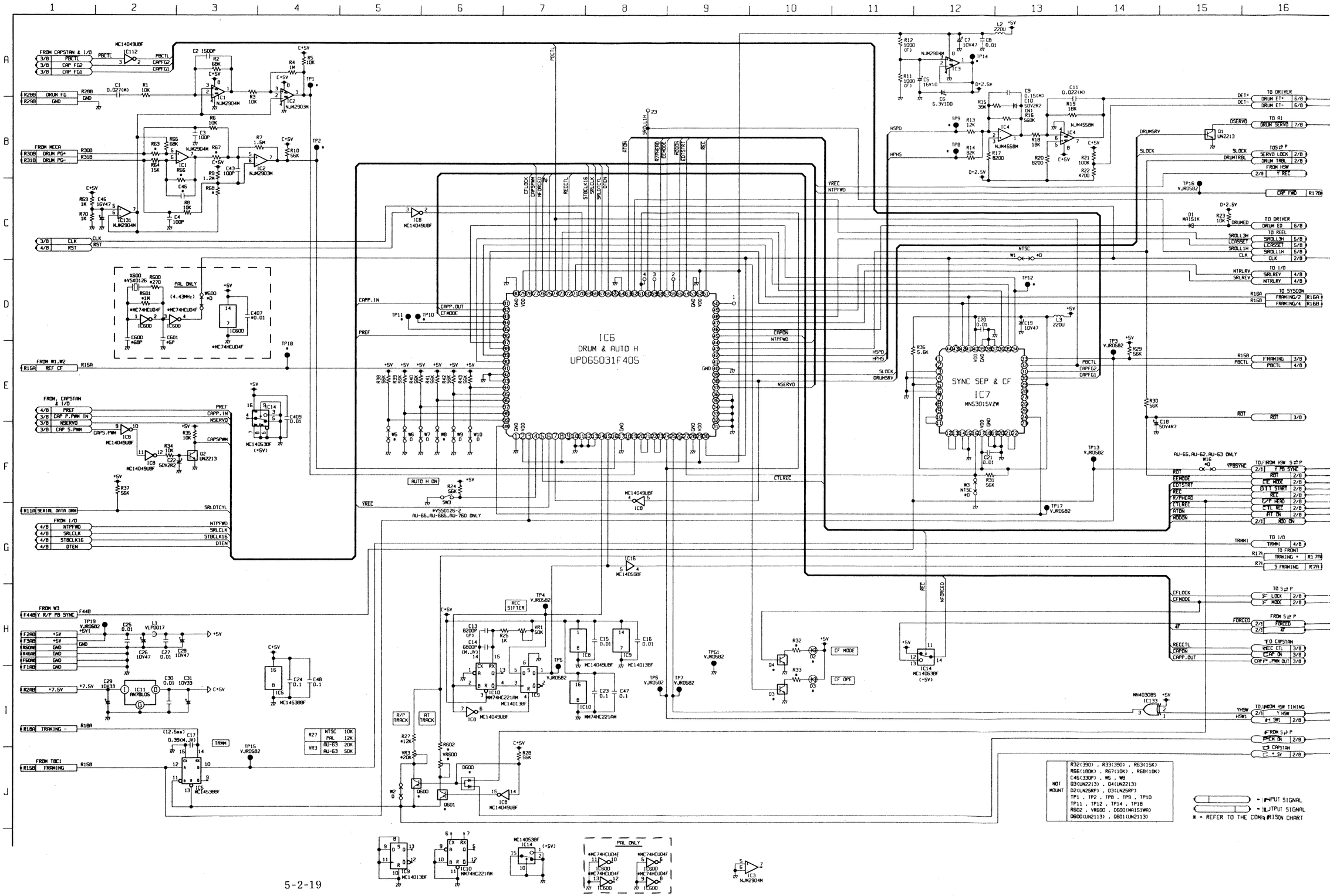

W5 (SERVO) SCHEMATIC DIAGRAM 2/8 (HSW, S/P)

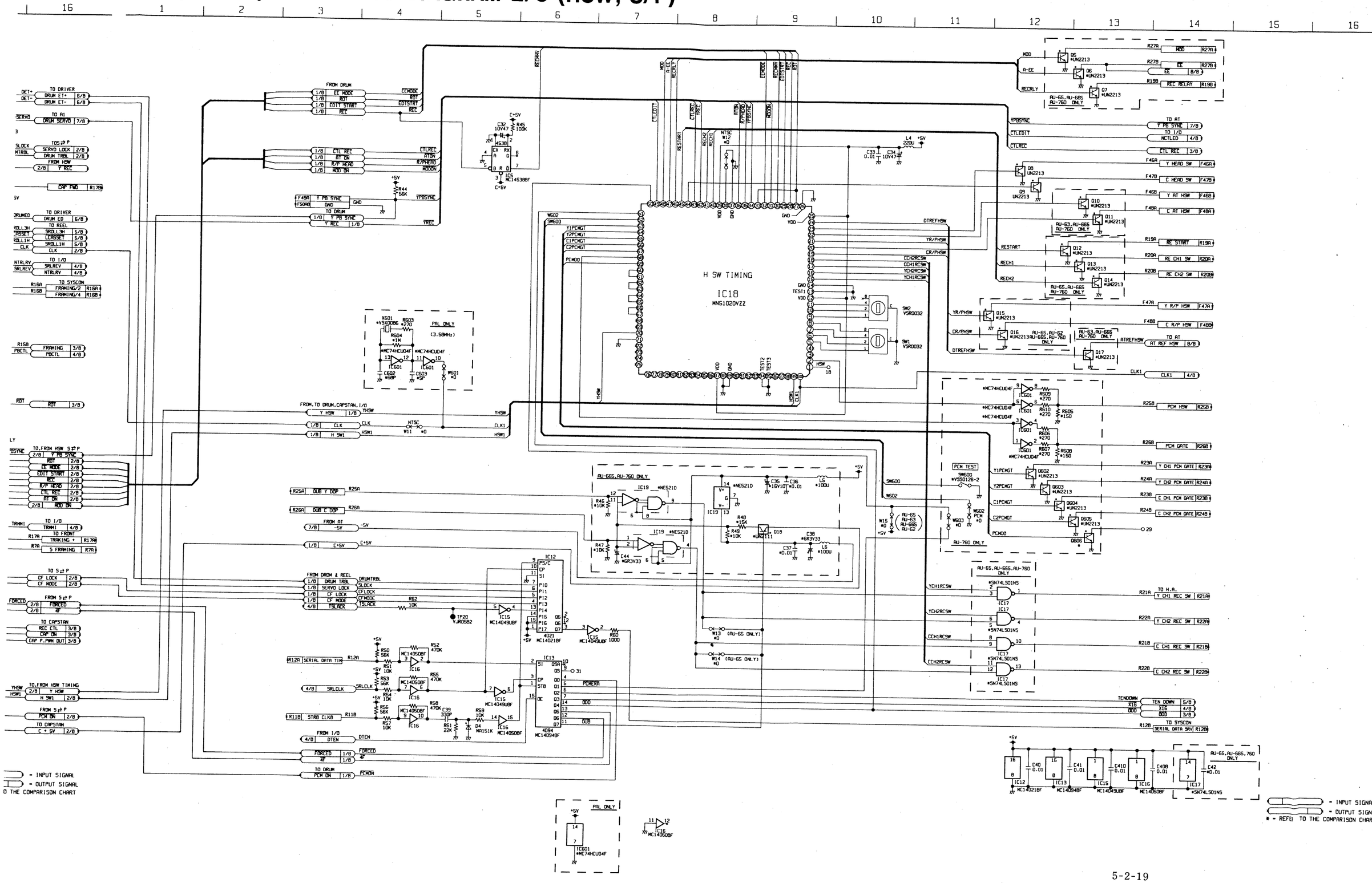

TYPE \ MODEL	AU-665	AU-65	AU-63	AU-62
NTSC	VEP82061B	VEP82061A	VEP82061D	VEP82061C
PAL	VEP82061G	VEP82061E	VEP82061F	VEP82061E

W5 (SERVO) SCHEMATIC DIAGRAM 3/8 (CAPSTAN SERVO)

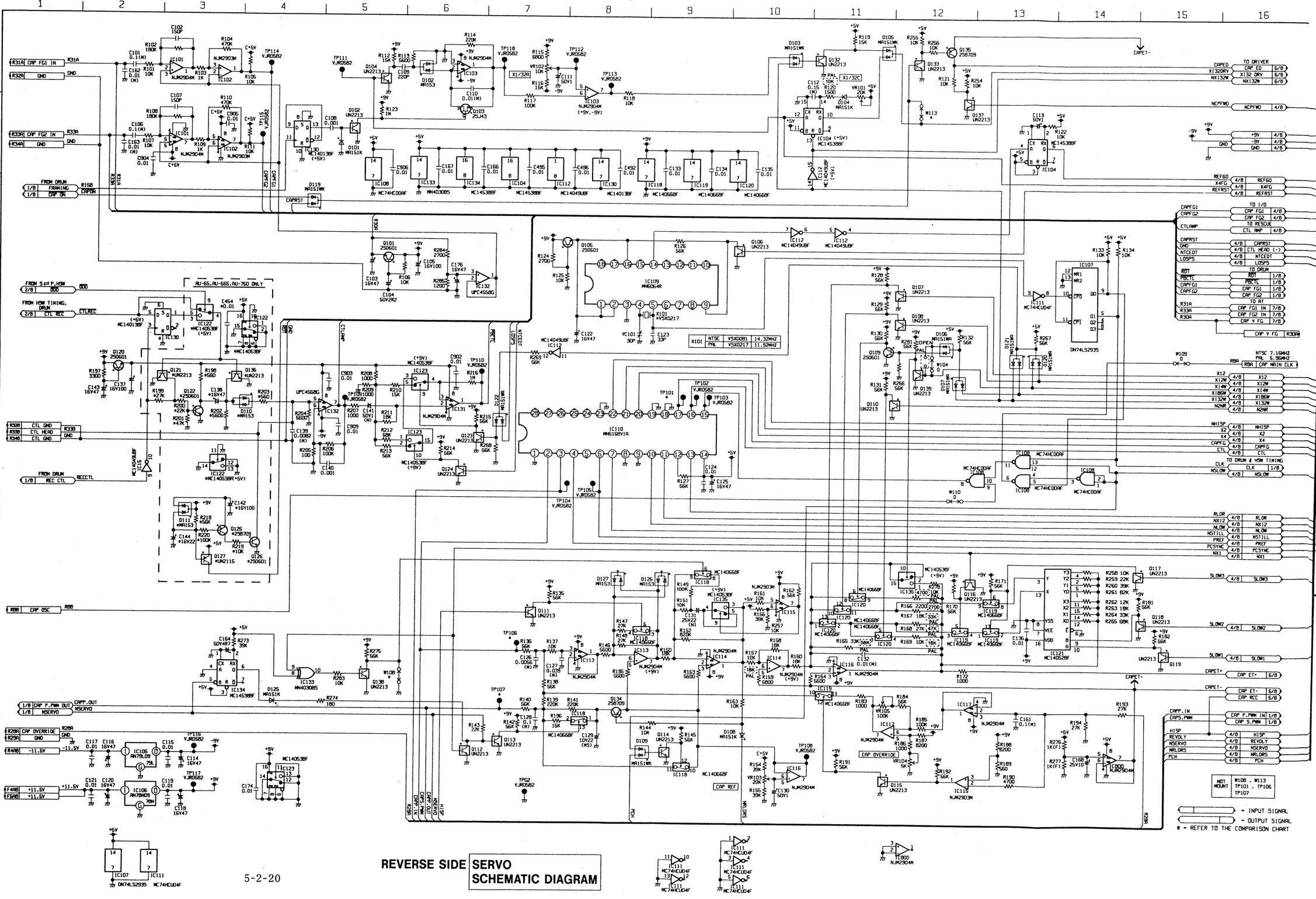

REVERSE SIDE **SERVO SCHEMATIC DIAGRAM**

W5 (SERVO) SCHEMATIC DIAGRAM 4/8 (I/O, CTL CMP)

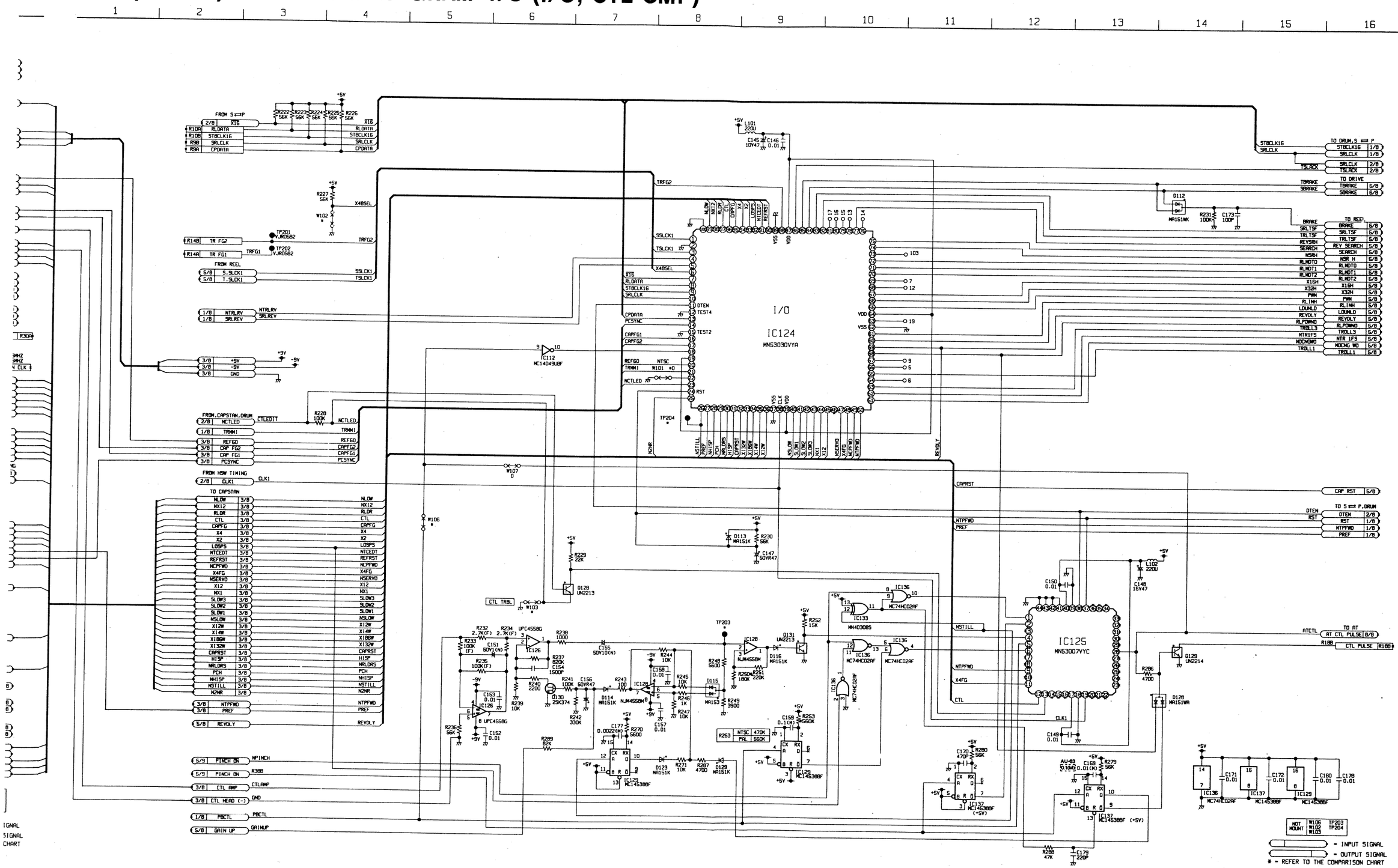

TYPE \ MODEL	AU-665	AU-65	AU-63	AU-62
NTSC	VEP82061B	VEP82061A	VEP82061D	VEP82061C
PAL	VEP82061G	VEP82061E	VEP82061F	VEP82061E

W5 (SERVO) SCHEMATIC DIAGRAM 5/8 (REEL SERVO)

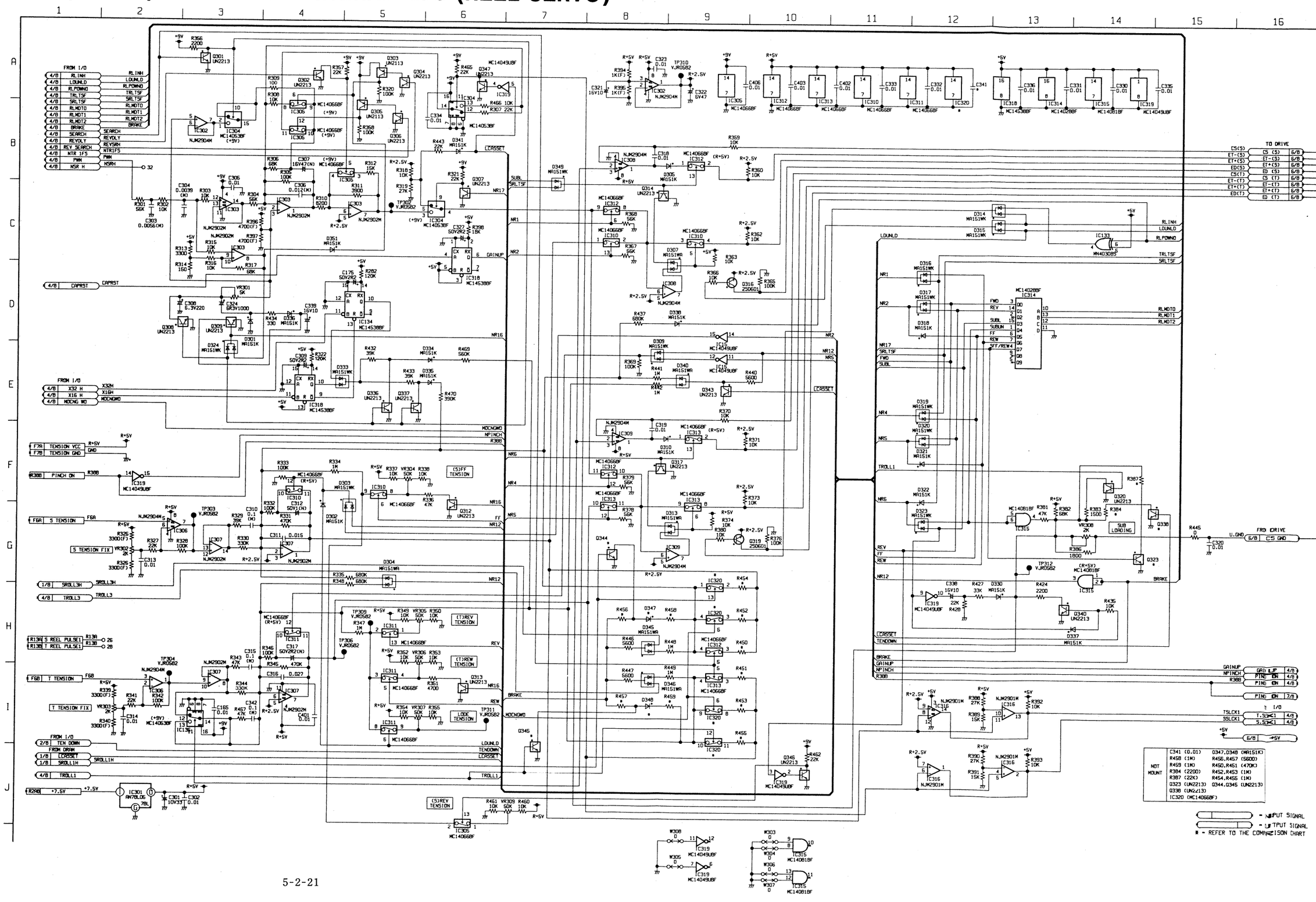

W5 (SERVO) SCHEMATIC DIAGRAM 6/8 (SERVO DRIVE)

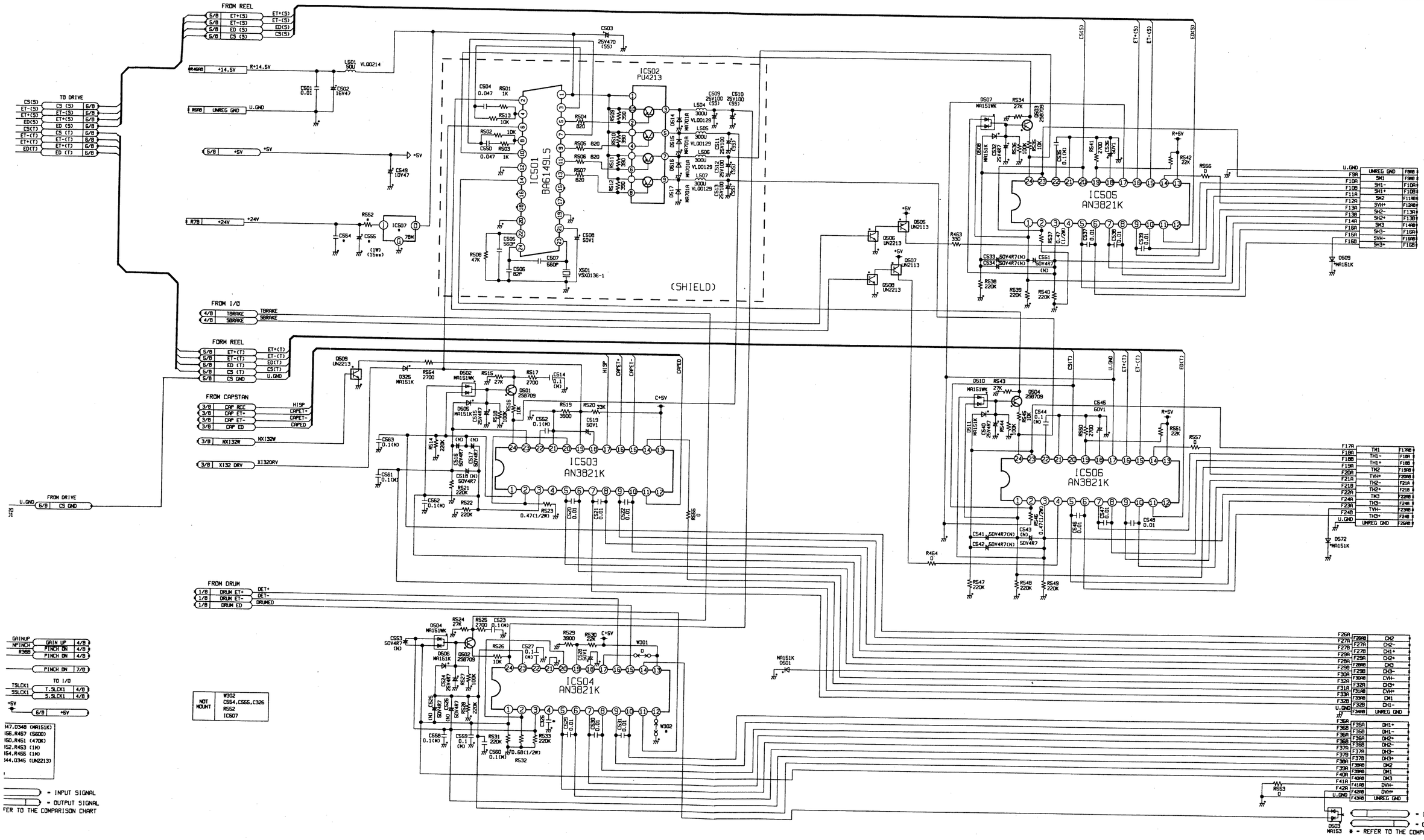

TYPE \ MODEL	AU-665	AU-65	AU-63	AU-62
NTSC	VEP82061B	AT is not	VEP82061D	AT is not
PAL	VEP82061G	Provided	VEP82061F	Provided

W5 (SERVO) SCHEMATIC DIAGRAM 7/8 (AUTO TRACKING1)[FOR AU-665,AU-63]

REF	NTSC	PAL
X700	VSX0149 (13.5MHz)	VSX0257 (11.5MHz)

REF	NTSC	PAL
R759,R775	68K(G)	82K(G)
R760,R776	8200(G)	6800(G)
R761,R783	0	15K(G)
R762,R784	91K(G)	120K(G)
R763,R786	330K	390K
R764,R785	68K	120K
R765,R787	330K	390K
R779	68K	39K

IC712
UPD65024F137

REVERSE SIDE SERVO
SCHEMATIC DIAGRAM

W5 (SERVO) SCHEMATIC DIAGRAM 8/8 (AUTO TRACKING 2)[FOR AU-665,AU-65]

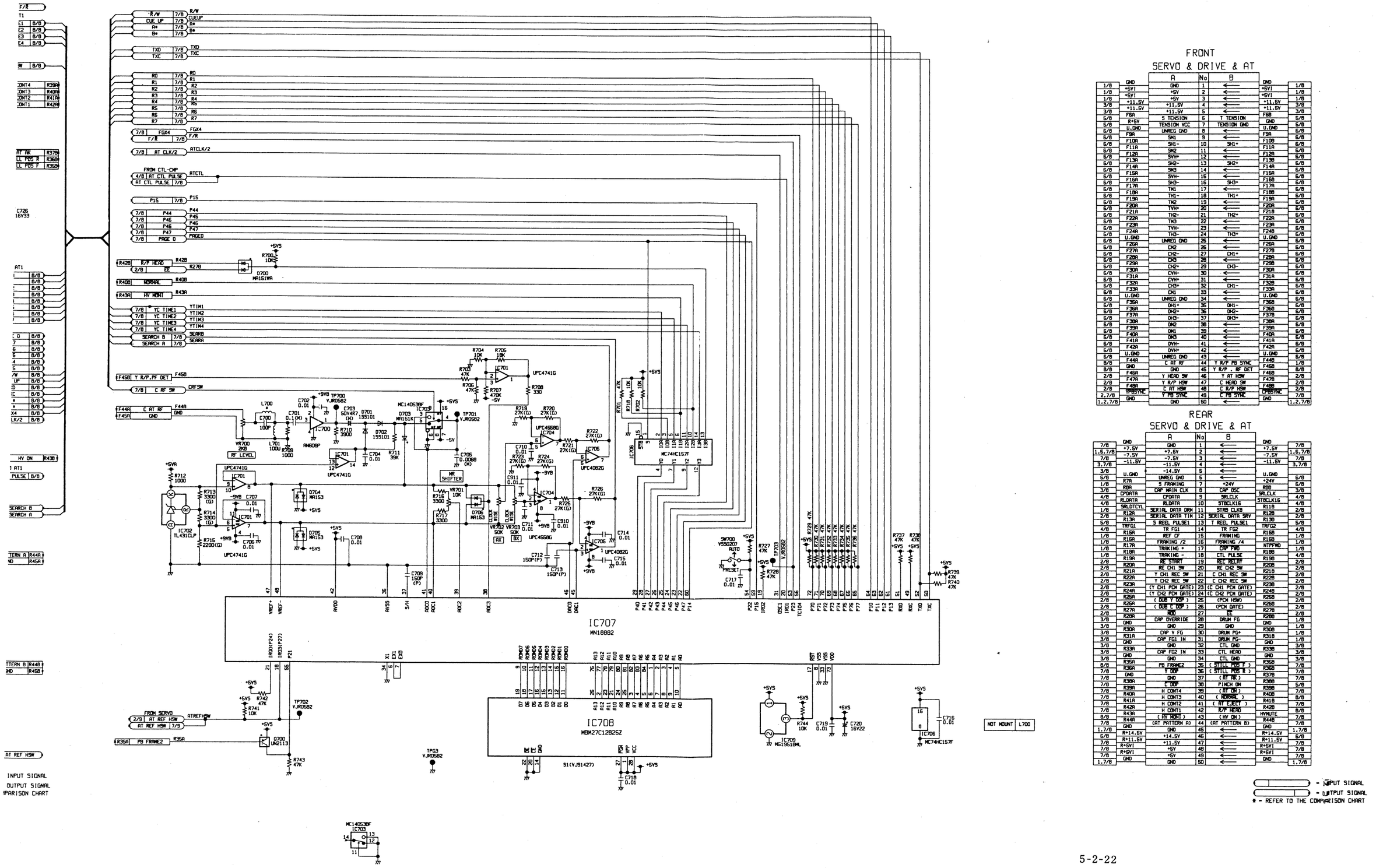

FRONT

SERVO & DRIVE & AT

		A	No	B		
1/8	GND	GND	1	⟵	GND	1/8
1/8	+5V1	+5V	2	⟵	+5V1	1/8
1/8	+5V1	+5V	3	⟵	+5V1	1/8
3/8	+11.5V	+11.5V	4	⟵	+11.5V	3/8
3/8	+11.5V	+11.5V	5	⟵	+11.5V	3/8
6/8	F6A	S TENSION	6	T TENSION	GND	5/8
6/8	R+5V	TENSION VCC	7	TENSION GND	U.GND	5/8
6/8	U.GND	UNREG GND	8	⟵	GND	6/8
6/8	F9A	SW1	9	⟵	F9A	6/8
6/8	F10A	SW1-	10	SW1+	F10B	6/8
6/8	F11A	SW2	11	⟵	F11A	6/8
6/8	F12A	SWH+	12	⟵	F12A	6/8
6/8	F13A	SW2-	13	SW2+	F13B	6/8
6/8	F14A	SW3	14	⟵	F14A	6/8
6/8	F15A	SWH-	15	⟵	F15A	6/8
6/8	F16A	SW3-	16	SW3+	F16B	6/8
6/8	F17A	TH1	17	⟵	F17A	6/8
6/8	F18A	TH1-	18	TH1+	F18B	6/8
6/8	F19A	TH2	19	⟵	F19A	6/8
6/8	F20A	TVH+	20	⟵	F20A	6/8
6/8	F21A	TH2-	21	TH2+	F21B	6/8
6/8	F22A	TH3	22	⟵	F22A	6/8
6/8	F23A	TVH-	23	⟵	F23A	6/8
6/8	F24A	TH3-	24	TH3+	F24B	6/8
6/8	F25A	UNREG GND	25	⟵	U.GND	6/8
6/8	F26A	CH2	26	⟵	F26A	6/8
6/8	F27A	CH2-	27	CH1+	F27B	6/8
6/8	F28A	CH3	28	⟵	F28A	6/8
6/8	F29A	CH2+	29	CH3-	F29B	6/8
6/8	F30A	CVH-	30	⟵	F30A	6/8
6/8	F31A	CVH+	31	⟵	F31A	6/8
6/8	F32A	CH3+	32	CH1-	F32B	6/8
6/8	F33A	CH1	33	⟵	F33A	6/8
6/8	U.GND	UNREG GND	34	⟵	U.GND	6/8
6/8	F35A	DH1+	35	DH1-	F35B	6/8
6/8	F36A	DH2+	36	DH2-	F36B	6/8
6/8	F37A	DH3-	37	DH3+	F37B	6/8
6/8	F38A	DH2	38	⟵	F38A	6/8
6/8	F39A	DH1	39	⟵	F39A	6/8
6/8	F40A	DH3	40	⟵	F40A	6/8
6/8	F41A	DVH-	41	⟵	F41A	6/8
6/8	F42A	DVH+	42	⟵	F42A	6/8
6/8	U.GND	UNREG GND	43	⟵	U.GND	6/8
6/8	F44A	C AT RF	44	Y R/P PB SYNC	F44B	1/8
8/8	GND	GND	45	Y R/P . RF DET	F45B	8/8
2/8	F46A	Y HEAD SW	46	Y AT HSW	F46B	2/8
2/8	F47A	Y R/P HSW	47	C HEAD SW	F47B	2/8
2/8	F48A	C AT HSW	48	C R/P HSW	F48B	2/8
2,7/8	YPBSYNC	Y PB SYNC	49	C PB SYNC	CPBSYNC	7/8
1,2,7/8	GND	GND	50	⟵	GND	1,2,7/8

REAR

SERVO & DRIVE & AT

		A	No	B		
7/8	GND	GND	1	⟵	GND	7/8
1,6,7/8	+7.5V	+7.5V	2	⟵	+7.5V	1,6,7/8
7/8	-7.5V	-7.5V	3	⟵	-7.5V	7/8
3,7/8	-11.5V	-11.5V	4	⟵	-11.5V	3,7/8
3/8	-14.5V	-14.5V	5	⟵		
5/8	U.GND	UNREG GND	6	⟵	U.GND	
1/8	R7A	S FRAMING	7	+24V	+24V	5/8
3/8	R8A	CAP MAIN CLK	8	CAP OSC	R8B	6/8
4/8	CPDATA	CPDATA	9	SRLCLK	SRLCLK	3/8
4/8	RLDATA	RLDATA	10	STBCLK16	STBCLK16	4/8
4/8	SRLDTCYL					4/8
1/8	R12A	SERIAL DATA DRM	11	STRB CLKB	R11B	2/8
2/8	R13A	SERIAL DATA TIM	12	SERIAL DATA SRV	R12B	2/8
2/8	R13A	S REEL PULSE1	13	T REEL PULSE1	R13B	5/8
5/8	F14A	TR FG1	14	TR FG2	TRFG2	4/8
4/8	R15A	REF CF	15	FRAMING	R15B	1/8
1/8	R16A	FRAMING /2	16	FRAMING /4	R16B	1/8
1/8	R17A	TRAKING +	17	CAP PWD	NTPFWD	1/8
1/8	R18A	TRAKING -	18	CTL PULSE	R18B	4/8
2/8	R19A	RE START	19	REC RELAY	R19B	2/8
2/8	R20A	RC CH1 SW	20	RC CH2 SW	R20B	2/8
2/8	R21A	Y CH1 REC SW	21	C CH1 REC SW	R21B	2/8
2/8	R22A	Y CH2 REC SW	22	C CH2 REC SW	R22B	2/8
2/8	R23A	(Y CH1 PCH GATE)	23	(C CH1 PCH GATE)	R23B	2/8
2/8	R24A	(Y CH2 PCH GATE)	24	(C CH2 PCH GATE)	R24B	2/8
2/8	R25A	(DUB Y DOP)	25	(PCH HSW)	R25B	2/8
2/8	R26A	(DUB C DOP)	26	(PCH GATE)	R26B	2/8
2/8	R27A			EE	R27B	2/8
3/8	R28A	CAP OVERRIDE	28	DRUM FG	R28B	1/8
3/8	GND	GND	29	GND	GND	1/8
3/8	R30A	CAP V FG	30	DRUM PG+	R30B	1/8
3/8	R31A	CAP FG1 IN	31	DRUM PG-	R31B	1/8
3/8	GND	GND	32	CTL GND	GND	3/8
3/8	R33A	CAP FG2 IN	33	CTL HEAD	R33B	3/8
3/8	GND	GND	34	CTL GND	GND	3/8
8/8	R35A	PB FRAME2	35	(STILL MOS F)	R35B	7/8
7/8	GND	Y DOP	36	(STILL POS R)	R36B	7/8
7/8	R38A	GND	37	(AT AK)	R37B	7/8
7/8	R39A	C DOP	38	PINCH ON	R38B	7/8
7/8	R40A	H CONT4	39	(AT ON)	R39B	5/8
7/8	R41A	H CONT3	40	(REWARD)	R40B	8/8
7/8	R42A	H CONT2	41	(AT EJECT)	R41B	7/8
7/8	R43A	H CONT1	42	R/P MEMO	R42B	7/8
8/8	R44A	(HV MONT)	43	(HV ON)	HVMUTE	7/8
7/8	GND	(AT PATTERN A)	44	(AT PATTERN B)	R44B	7/8
1,7/8	GND	GND	45	⟵	GND	1,7/8
6/8	R+14.5V	+14.5V	46	⟵	R+14.5V	6/8
7/8	R+11.5V	+11.5V	47	⟵	R+11.5V	7/8
7/8	R+5V1	+5V	48	⟵	R+5V1	7/8
7/8	R+5V1	+5V	49	⟵	R+5V1	7/8
1,7/8	GND	GND	50	⟵	GND	1,7/8

▭ - INPUT SIGNAL

▭ - OUTPUT SIGNAL

* - REFER TO THE COMPARISON CHART

TYPE \ MODEL	AU-665	AU-65	AU-63	AU-62
NTSC	VEP84095B	VEP84095A	VEP84095C	VEP84095C
PAL	VEP84095F	VEP84095D	VEP84095E	VEP84095E

W6 (AUDIO) SCHEMATIC DIAGRAM 1/5 (LINEAR AUDIO)

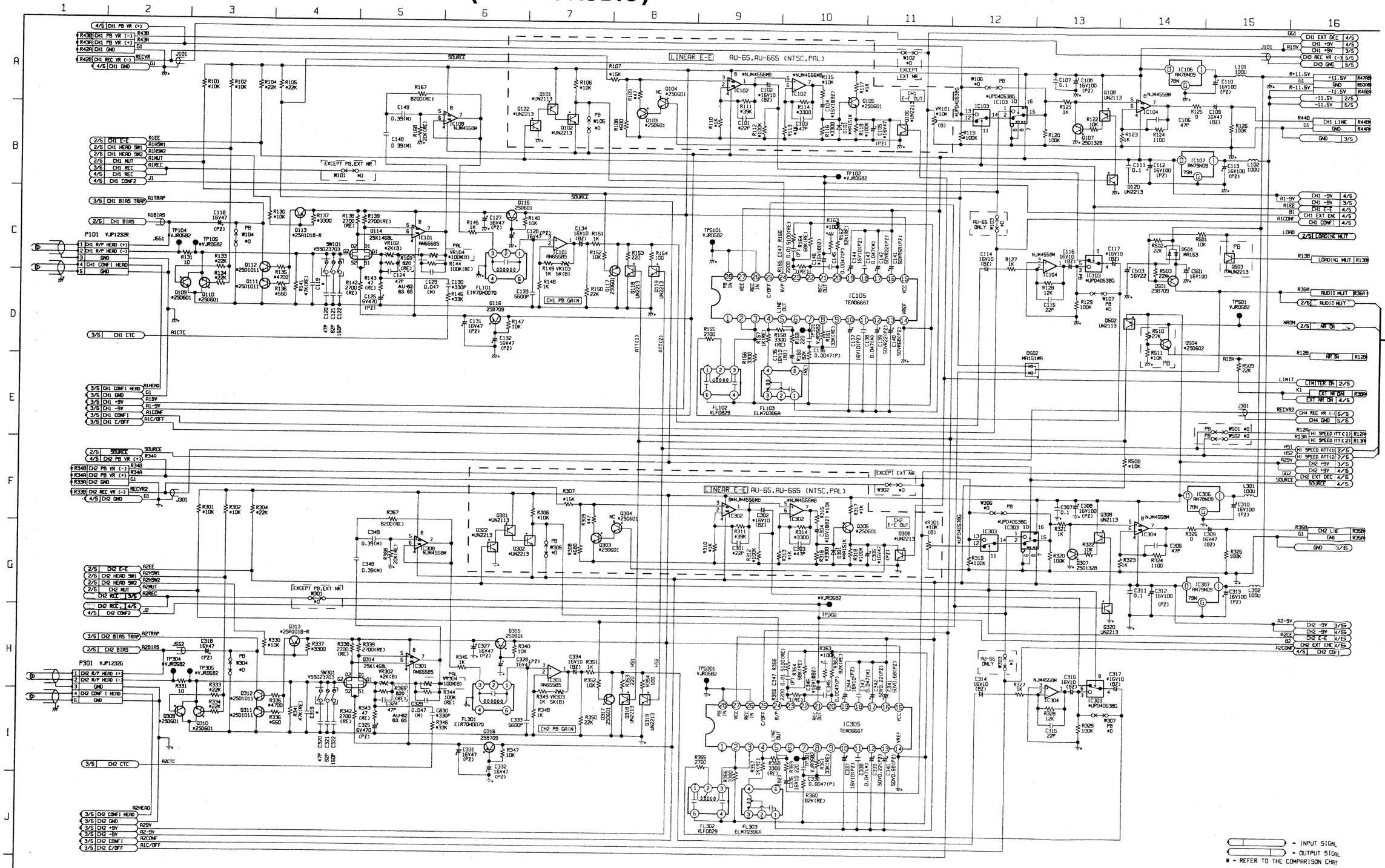

W6 (AUDIO) SCHEMATIC DIAGRAM 2/5 (REC, TC)

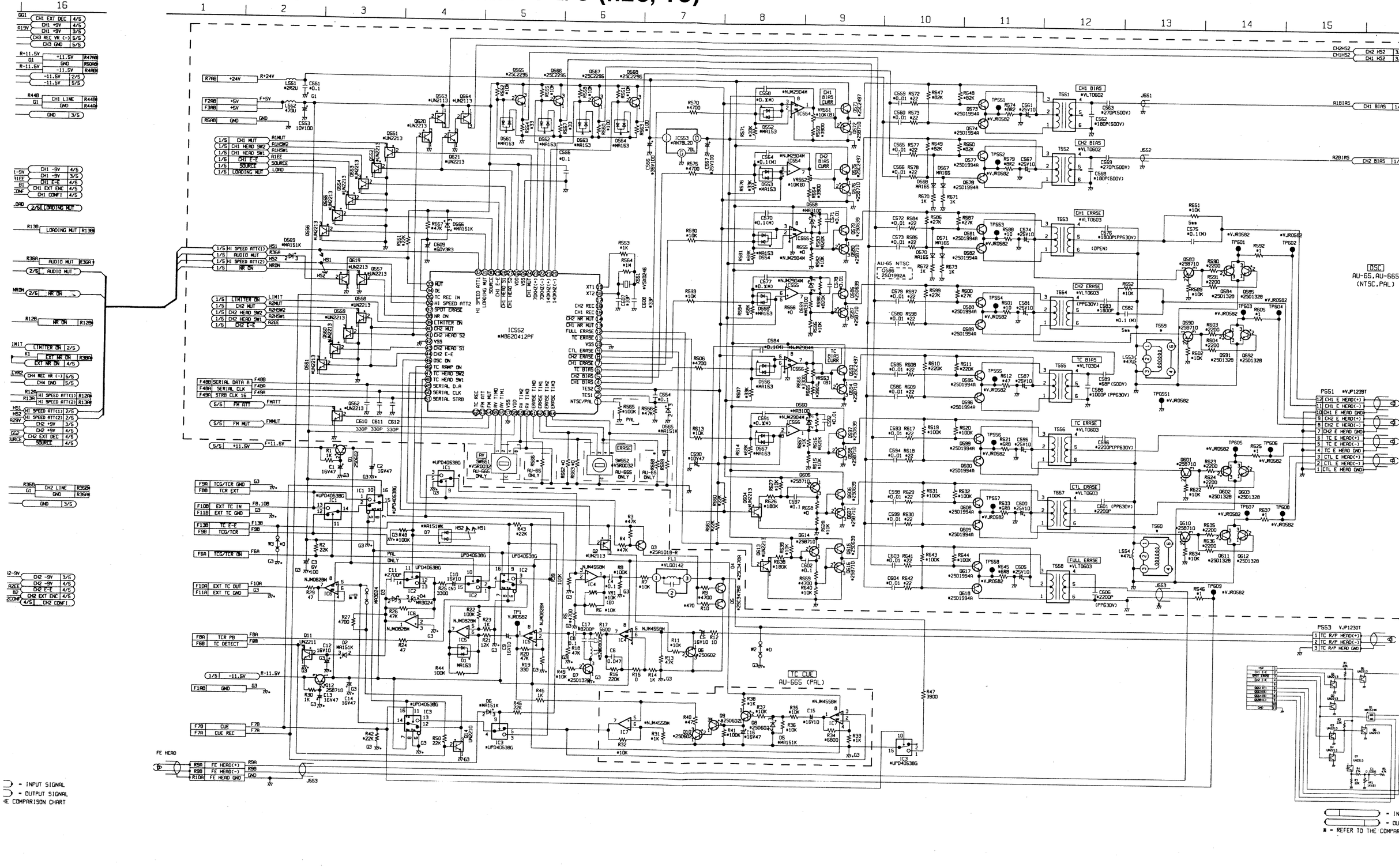

AUDIO
SCHEMATIC DIAGRAM

TYPE \ MODEL	AU-665	AU-65	AU-63	AU-62
NTSC	VEP84095B	VEP84095A	VEP84095C	VEP84095C
PAL	VEP84095F	VEP84095D	VEP84095E	VEP84095E

W6 (AUDIO) SCHEMATIC DIAGRAM 3/5 (CONFI)

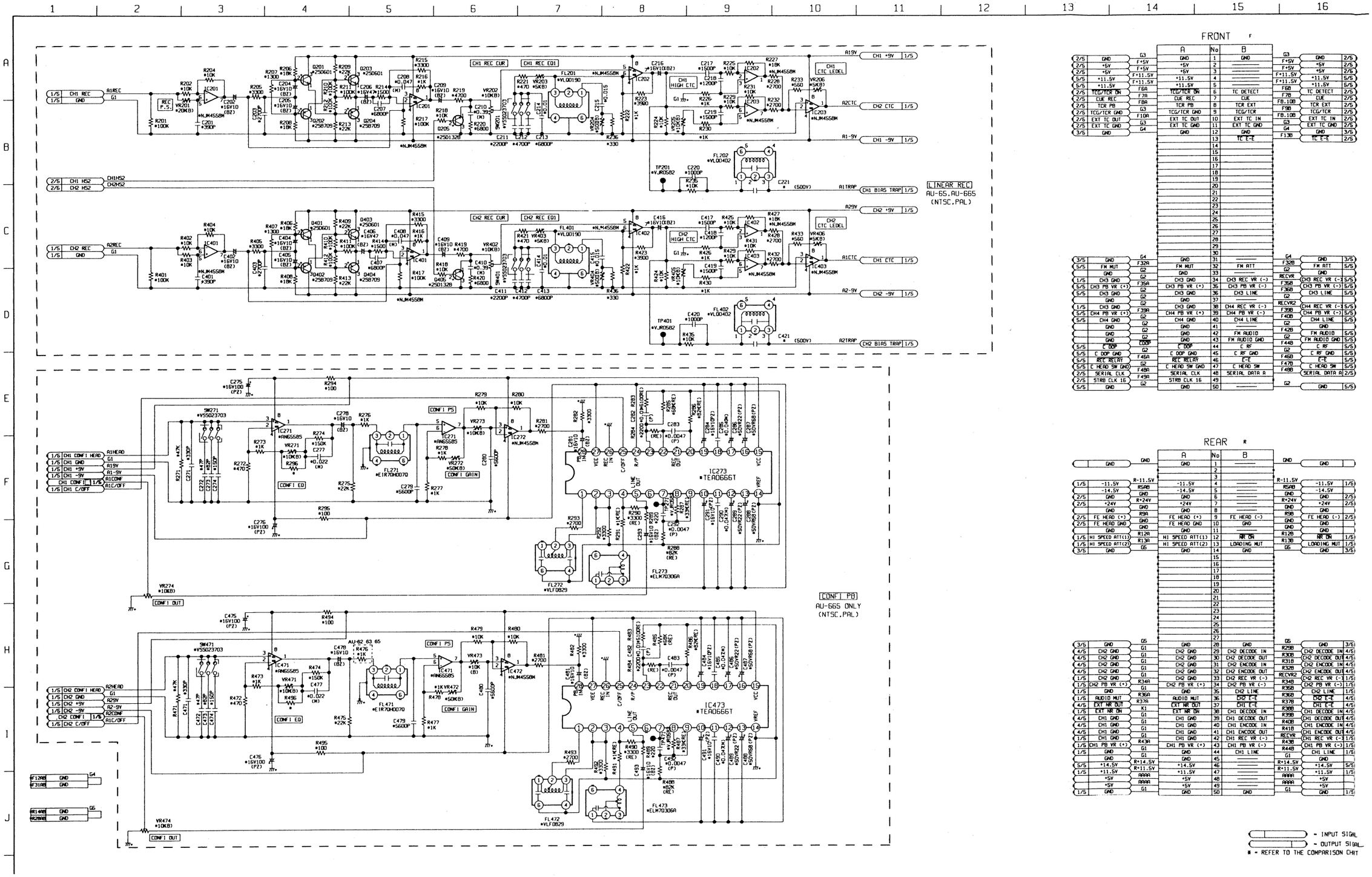

FRONT

			A	No	B			
2/5	GND	G3	GND	1	GND	G3	GND	2/5
2/5	+5V	F+5V	+5V	2	——	F+5V	+5V	2/5
2/5	+5V	F+5V	+5V	3	——	F+5V	+5V	2/5
5/5	+11.5V	F+11.5V	+11.5V	4	——	F+11.5V	+11.5V	5/5
5/5	+11.5V	F+11.5V	+11.5V	5	——	F+11.5V	+11.5V	5/5
2/5	TCG/TCR DN	F6A	TCG/TCR DN	6	TC DETECT	F6B	TC DETECT	2/5
2/5	CUE REC	F7A	CUE REC	7	CUE	F7B	CUE	2/5
2/5	TCR PB	F8A	TCR PB	8	TCR EXT	F8B	TCR EXT	2/5
2/5	TCG/TCR GND	G3	TCG/TCR GND	9	TCG/TCR	F8.1GB	TCG/TCR	2/5
2/5	EXT TC OUT	F10A	EXT TC OUT	10	EXT TC IN	F8.1GB	EXT TC IN	2/5
2/5	EXT TC GND	G3	EXT TC GND	11	EXT TC GND	G3	EXT TC GND	2/5
3/5	GND	G4	GND	12	GND	G4	GND	3/5
				13	——	F13B	TC E-E	2/5
3/5	GND	G4	GND	31	——	G4	GND	3/5
5/5	FM MUT	F32A	FM MUT	32	FM ATT	F32B	FM ATT	5/5
1/5	GND	G2	GND	33	——	G2	GND	
1/5	CH3 GND	G2	CH3 GND	34	CH3 REC VR (-)	RECVR	CH3 REC VR (-)	5/5
5/5	CH3 PB VR (+)	F35A	CH3 PB VR (+)	35	CH3 PB VR (-)	F35B	CH3 PB VR (-)	5/5
5/5	CH3 GND	G2	CH3 GND	36	CH3 LINE	F36B	CH3 LINE	5/5
	GND	G2	GND	37	——	G2		
1/5	CH3 GND	G2	CH3 GND	38	CH4 REC VR (-)	RECVR2	CH4 REC VR (-)	5/5
5/5	CH4 PB VR (+)	F39A	CH4 PB VR (+)	39	CH4 PB VR (-)	F39B	CH4 PB VR (-)	5/5
5/5	CH4 GND	G2	CH4 GND	40	CH4 LINE	F40B	CH4 LINE	5/5
	GND	G2	GND	41	——	G2	GND	
	GND	G2	GND	42	FM AUDIO	F42B	FM AUDIO	5/5
	GND	G2	GND	43	FM AUDIO GND	G2	FM AUDIO GND	5/5
5/5	C DOP	C00P	C DOP	44	C RF	F44B	C RF	5/5
5/5	C DOP GND	G2	C DOP GND	45	C RF GND	G2	C RF GND	5/5
5/5	REC RELAY	F46A	REC RELAY	46	E-E	F46B	E-E	5/5
5/5	C HEAD SW GND	G2	C HEAD SW GND	47	C HEAD SW	F47B	C HEAD SW	5/5
5/5	SERIAL CLK	F48A	SERIAL CLK	48	SERIAL DATA A	F48B	SERIAL DATA A	2/5
2/5	STRB CLK 16	F49A	STRB CLK 16	49	——			
5/5	GND	G2	GND	50	——	G2	GND	5/5

REAR

			A	No	B			
	GND	GND	GND	1	——	GND	GND	
				2				
				3		R-11.5V	-11.5V	1/5
1/5	-11.5V	R-11.5V	-11.5V	4	——	RSAB	-14.5V	1/5
	-14.5V	RSAB	-14.5V	5	——	GND	GND	2/5
2/5	GND	GND	GND	6	——	R+24V	+24V	2/5
2/5	+24V	R+24V	+24V	7	——	GND	GND	
	GND	GND	GND	8	——	FE HEAD (-)	GND	
2/5	FE HEAD (+)	R9A	FE HEAD (+)	9	FE HEAD (-)	GND	GND	2/5
2/5	FE HEAD GND	GND	FE HEAD GND	10	GND	GND	GND	
	GND	GND	GND	11	——	GND	GND	
1/5	HI SPEED ATT(1)	R12A	HI SPEED ATT(1)	12	NR ON	R12B	NR ON	1/5
1/5	HI SPEED ATT(2)	R13A	HI SPEED ATT(2)	13	LOADING MUT	R13B	LOADING MUT	1/5
3/5	GND	G5	GND	14	GND	G5	GND	3/5
				15				
				16				
				17				
				18				
				19				
				20				
				21				
				22				
				23				
				24				
				25				
				26				
				27				
3/5	GND	G5	GND	28	GND	R29B	GND	3/5
4/5	CH2 GND	G1	CH2 GND	29	CH2 DECODE IN	R30B	CH2 DECODE IN	4/5
4/5	CH2 GND	G1	CH2 GND	30	CH2 DECODE OUT	R31B	CH2 DECODE OUT	4/5
4/5	CH2 GND	G1	CH2 GND	31	CH2 ENCODE IN	R32B	CH2 ENCODE IN	4/5
4/5	CH2 GND	G1	CH2 GND	32	CH2 ENCODE OUT	R32B	CH2 ENCODE OUT	4/5
1/5	CH2 GND	G1	CH2 GND	33	CH2 REC VR (-)	RECVR2	CH2 REC VR (-)	1/5
1/5	CH2 PB VR (+)	R34A	CH2 PB VR (+)	34	CH2 PB VR (-)	R34B	CH2 PB VR (-)	1/5
1/5	GND	G1	GND	35	CH2 LINE	R35B	CH2 LINE	1/5
1/5	AUDIO MUT	R36A	AUDIO MUT	36	CH2 E-E	R36B	CH2 E-E	4/5
4/5	EXT NR OUT	R37A	EXT NR OUT	37	CH1 E-E	R37B	CH1 E-E	4/5
1/5	EXT NR ON	K1	EXT NR ON	38	CH1 DECODE IN	R38B	CH1 DECODE IN	4/5
4/5	CH1 GND	G1	CH1 GND	39	CH1 DECODE OUT	R39B	CH1 DECODE OUT	4/5
4/5	CH1 GND	G1	CH1 GND	40	CH1 ENCODE IN	R40B	CH1 ENCODE IN	4/5
4/5	CH1 GND	G1	CH1 GND	41	CH1 ENCODE OUT	R41B	CH1 ENCODE OUT	4/5
1/5	CH1 GND	G1	CH1 GND	42	CH1 REC VR (-)	RECVR	CH1 REC VR (-)	1/5
1/5	CH1 PB VR (+)	R43A	CH1 PB VR (+)	43	CH1 PB VR (-)	R43B	CH1 PB VR (-)	1/5
1/5	GND	G1	GND	44	CH1 LINE	R44B	CH1 LINE	1/5
	GND	G1	GND	45	——	G1	GND	
5/5	+14.5V	R+14.5V	+14.5V	46	——	R+14.5V	+14.5V	5/5
1/5	+11.5V	R+11.5V	+11.5V	47	——	R+11.5V	+11.5V	1/5
	+5V	RAAA	+5V	48	——	RAAA	+5V	
	+5V	RAAA	+5V	49	——	RAAA	+5V	
1/5	GND	G1	GND	50	GND	G1	GND	1/5

= INPUT SIGAL
= OUTPUT SIGAL
* = REFER TO THE COMPARISON CHRT

REVERSE SIDE **AUDIO SCHEMATIC DIAGRAM**

W6 (AUDIO) SCHEMATIC DIAGRAM 4/5 (EXT NR) [FOR AU-665 PAL]

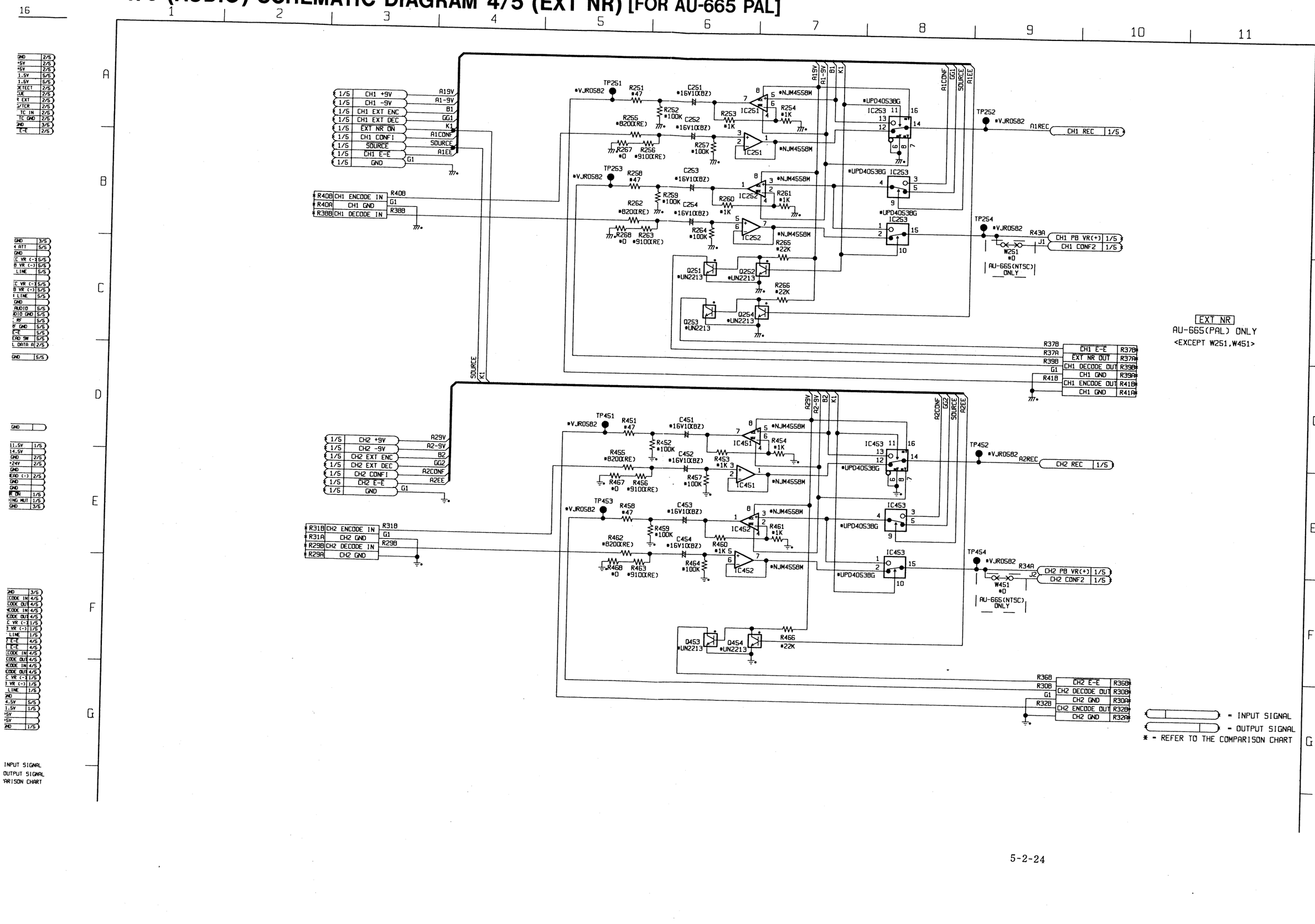

MODEL / TYPE	AU-665	AU-65	AU-63	AU-62
NTSC	VEP84095B	VEP84095A	VEP84095C	VEP84095C
PAL	VEP84095F	VEP84095D	VEP84095E	VEP84095E

W6 (AUDIO) SCHEMATIC DIAGRAM 5/5 (FM AUDIO)

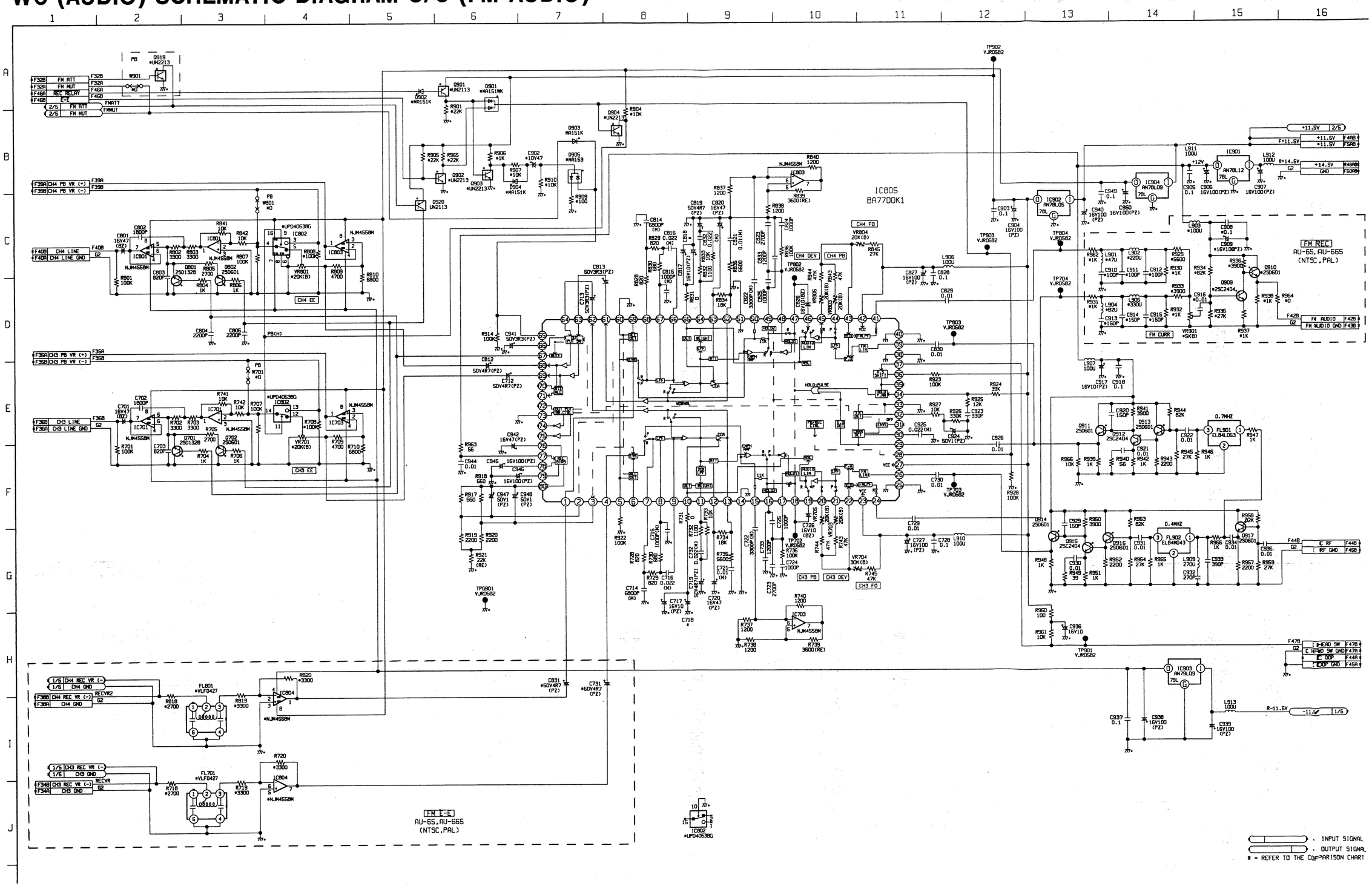

5-2-25

B. MOTHER
SCHEMATIC DIAGRAM

TYPE \ MODEL	AU-665	AU-65	AU-63	AU-62
NTSC	VEP80549B	VEP80549A	VEP80549B	VEP80549A
PAL	VEP80549C	VEP80549A	VEP80549B	VEP80549A

B0 (B,MOTHER) SCHEMATIC DIAGRAM 1/2

VJP1233T

CN51		FROM / TO		
1	CAP MAIN CLK	B1-R5A		
2	GND	B1-R5B		
3	CAP OSC	B1-R5C		
4	GND	B1-R5B		
5	+7.6V	B1-L3C		
6	-7.6V	B1-L31C		
7	TR FG 1	B1-R14A		

VJP1233T

CN52		FROM / TO			
1	(TCR EXT)	B2-L28A			AU-65/665/760 ONLY
2	(TC GND)	B2-L30C			AU-65/665/760 ONLY
3	TCR PB	B2-L26C			
4	TCO/TCR	B2-L30A			
5	TC GND	B2-L30C			
6	TC EE	B1-L20A			

VJP1394T

CN54		FROM / TO			
1	GND	B1-L24B			
2	RECEIVE B	B1-L23C			
3	TRANSMIT B	B1-L24C			
4	GND	B1-L23B			
5	RECEIVE A	B1-L23A			
6	TRANSMIT A	B1-L24A			
7	SPARE 1	B1-L25A			
8	SPARE 2	B1-L25C			
9	(GND)	B2-L4A,B			AU-665/760 ONLY
10	(REF VIDEO IN)	B2-L3A			AU-665/760 ONLY
11	(DUB CF)	B2-L3B			AU-665/760 ONLY
12	(GND)	B2-L4A,B			AU-665/760 ONLY
13	(B5)	B2-L6A			AU-665/760 ONLY

VJP1929T

CN56		FROM / TO		
1	CN SERIAL IN	B1-L26A		
2	CN SERIAL GND	B1-L26B		
3	CN SERIAL OUT	B1-L27A		
4	DIAL STILL	B1-L26B		
5	S ø0	B1-L26C		
6	S ø1	B1-L27C		
7	JOG POSITION	B1-L27B		
8	+24V	POWER10-5		
9	+5V	POWER10-1		
10	+5V	POWER10-1		
11	GND	POWER10-4		
12	GND	POWER10-4		
13	REM1 LED	B1-L13A		
14	REM2 LED	B1-L13B		

VJP1248T

CN58		FROM / TO			
1	(GND)	B2-L19A,C			AU-65/665/760 ONLY
2	(REC VITC)	B2-L17A			AU-65/665/760 ONLY
3	(VIDEO)	B2-L17C			AU-65/665/760 ONLY
4	(GND)	B2-L19A,C			
5	(COMP SYNC)	B2-L19A			AU-65/665/760 ONLY
6	(VP REC)	B2-L18C			AU-65/665/760 ONLY
7	GND	B2-L21A			
8	Y PB 2	B2-L20A			

VJP1930T

CN59		FROM / TO		
1	R SYNC	B2-L22A		
2	R VP	B1-L30C	B2-L22C	
3	GND	B1-L29ABC	B2-L23C	B2-L26C
4	Y PB SYNC	B2-L24C		
5	TAPE Y	B2-L24A		
6	GND	B1-L29ABC	B2-L23C	B2-L26C
7	TC CF	B2-L23A		
8	R PB	B1-L30A		
9	GND	B1-L29ABC		
10	CHARACTOR	B1-L28A		
11	CHARACTOR GATE	B1-L28C		
12	GND			
13	(DUB CF)	B2-L5B		
14	(REF VIDEO)	B2-L5C		
15	(GND)	B2-L8C		

VJP1246T (AU-665/635 ONLY)

CN60		FROM / TO		
1	STILL POS F	B1-R2A		
2	STILL POS R	B1-R2B		
3	AT AR	B1-R2C		
4	AT ON	B1-R3B		
5	NORMAL	B1-R4A		
6	AT EJECT	B1-R4C		

VJP1244T (SPARE)

CN61		FROM / TO		
1	OUT SPARE 1	B1-L19B		
2	OUT SPARE 2	B1-L20B		
3	IN SPARE 1	B1-L19C		
4	IN SPARE 2	B1-L20C		

VJP2856A026

CN53

FROM / TO			A	NO	B	FROM / TO		
CN610-3			CAP OVERIDE	1	CTL PULSE	B1-R3C	CN50-31A	B2-L26C
B1-R1A,B,C			GND	2	STRB CLK 16	B1-R8A	CN310-2	CN57-2
B1-R7A	CN50-29B	CN57-1	CN310-1	3	SERIAL DATA SO IN	B1-L22A		
B1-L22B			SERIAL DATA SO OUT	4	SEARCH 2	B1-L22C		
B1-L21C			SEARCH 1	5	JOG PLS	B1-L21A		
B1-L19A			EJECT SW CMND	6	START MARK	B1-L18C		
B1-L18B			SEARCH ø	7	SERVO LOCK LAMP	B1-L16A		
B1-L15B			STANBY ON STATUS	8	CASSETT IN	B1-L16A		
B1-L14C			STANBY ON CMND	9	PREROLL CMND	B1-L14B		
B1-L14A			LOCAL EN	10	+11.5V	B1-L11C	POWER10-2	B2-L14C
B1-L4B			CTS	11	RXD	B1-L4A		
B1-L3B			RTS	12	TXD	B1-L3A		
B1-L2A,B,C			+5V	13	GND	B1-L1A,B,C		

B1-L
VJS2899A096

B1 SYSCON

L (LEFT)	A			B			C		
1	GND			←	CN63-13B		←	POWER10-4	
2	+5V			←	CN63-13A		←	POWER10-1	
3	TXD	CN63-12B		RTS	CN63-12A		+7.5V	CN51-6	B2-3C
4	RXD	CN63-11B		CTS	CN63-11A		+14.5V	POWER10-3	B2-4C
5	D7L	B2-11B		D8L	B2-11A		CSDL	B2-8C	
6	D6L	B2-10B		D4L	B2-10A		MC WR	B2-9C	
7	D3L	B2-9B		D2L	B2-9A		MC RD	B2-10C	
8	D1L	B2-8B		D0L	B2-8A		SYS INT	B2-11C	
9	A0L	B2-12A		A1L	B2-12B		TC INT	B2-12C	
10	A2L	B2-13A		A3L	B2-13B		TAPE FWD	B2-13C	CN50-20A
11	A4L	B2-14A		A5L	B2-14B		+11.5V	POWER10-2	CN53-10B B2-14C
12	A6L	B2-15A		A7L	B2-15B		+24V	POWER10-5	CN56-9 CN56-14
13	REM1 LED	CN56-13		REM2 LED	CN56-14		EJECT LED	CN50-20B	
14	LOCAL EN	CN63-10A		PREROLL CMND	CN63-9B		STANBY ON CMND	CN63-9A	
15	CASSETT IN	CN63-8B		STANBY ON STATUS	CN63-8A		ADV 2	CN50-4B	B2-15C
16	SERVO LOCK LAMP	CN63-7B		PCM DET	CN50-14A		DIGITAL SW	CN311-1	
17	DUB	CN50-11A		PHASE INH	CN50-13B		ANALOG SW	CN311-2	
18				SEARCH ø	CN63-7A		START MARK	CN63-6B	
19	EJECT SW CMND	CN63-6A		OUT SPARE 1	CN61-1		IN SPARE 1	CN61-3	
20	TC EE	CN62-6		OUT SPARE 2	CN61-2		IN SPARE 2	CN61-4	
21	JOG PLS	CN63-5B					SEARCH 1	CN63-5A	
22	SERIAL DATA SO IN	CN63-3B		SERIAL DATA SO OUT	CN63-4A		SEARCH 2	CN63-4B	
23	RECEIVE A	CN54-5		GND	CN54-4		RECEIVE B	CN54-2	
24	TRANSMIT A	CN54-6		GND	CN54-1		TRANSMIT B	CN54-3	
25	SPARE 1	CN54-7		CN SERIAL GND	CN56-2		SPARE 2	CN54-8	
26	CN SERIAL IN	CN56-1		DIAL STILL	CN56-4		S ø 0	CN56-5	
27	CN SERIAL OUT	CN56-3		JOG POSITION	CN56-7		S ø 1	CN56-6	
28	CHARACTOR	CN59-10		-14.5V	CN50-21A		CHARACTOR GATE	CN59-11	
29	GND	CN59-3,6,9		←	CN59-3,6,9		←	CN59-3,6,9	
30	R HD	CN59-8		-11.5V	CN50-22A		R VP	CN59-2	B2-22C
31	PLAY/(LOADING MOT)	CN50-22B	CN410-1	CUE	CN410-2		-7.5V	CN51-6	B2-31C
32	GND			←			←	POWER10-4	

B1-R
VJS2899A096

B1 SYSCON

R (RIGHT)	A			B			C		
1	GND			←			←	POWER10-4	
2	STILL POS F	CN60-1		STILL POS R	CN60-2		AT AR	CN60-3	
3	PINCH ON	CN50-32B		AT ON	CN60-4		CTL PULSE	CN50-31A	B2-26C CN53-1B
4	NORMAL	CN60-5		R/P HEAD	CN50-31B		AT EJECT	CN60-7	
5	CAP MAIN CLK	CN61-1		GND	CN61-2,4		CAP OSC	CN61-3	
6	S FRAMING	CN50-30A	B2-20C	FRAMING /2	CN50-30B	B2-26A	FRAMING /4	CN50-29A	B2-25A
7	SERIAL CLK	CN50-29B	CN310-1 CN57-1,CN63-3A	SERIAL DATA CAP	CN50-27A		SERIAL DATA SRV	CN50-27B	
8	STRB CLK 16	CN50-28A	CN310-2 CN57-2,CN63-2B	SERIAL DATA DRM	CN50-26A		SERIAL DATA AUD/FM ATT	CN50-26B	
9	STRB CLK 8	CN50-29B		SERIAL DATA REL	CN50-25A		SERIAL DATA PCM	CN310-3	
10	SERIAL DATA FRT	CN50-25B		SERIAL DATA TIM	CN50-24A		SERIAL DATA MEC	CN57-3	
11	RE START	CN50-24B		CAP FWD	CN50-23A		TC DETECT	CN50-23B	
12	S REEL PULSE 1	CN57-8	CN610-2	T REEL PULSE 1	CN57-10	CN610-1	TR PHOTO 1	CN57-5	
13	S REEL PULSE 2	CN57-9		T REEL PULSE 2	CN57-11		TR PHOTO 2	CN57-6	
14	TR FG 1	CN51-7		TR FG 2	CN50-21B		SERVO LOCK	CN50-19B	
15	PCM LED	CN311-3		(DUB IN)/(HI SPEED ATT1)	CN50-19A		N-STD AUTO	CN50-17A	
16	IN SCH	CN50-18A		(CPNT CF ON) /(HI SPEED ATT2)	CN50-18B		VISC ON	CN50-16B	
17	Y2K	CN50-17B		(VIDEO IN) /(FM MUT)	CN50-16A		LOADING M +	CN55-1	
18	AT SPEED	CN50-15A		LOW TAP	CN50-15B		LOADING M -	CN55-2	
19	TD OFF	CN50-14B		V PHASE CF	CN50-13A		SMALL R M -	CN55-3	
20	STD	CN50-12A		LINE	CN50-12B		SMALL R M +	CN55-4	
21	REF DET	CN50-11B	B2-7B	REF SCH	CN50-10A	B2-7A	ELAVATOR M -	CN55-5	
22	C OFF	CN50-9A		FRM ON	CN50-9B		ELAVATOR M +	CN55-6	
23	CF SELECT 1	CN50-8B		CF SELECT 2	CN50-7A		PINCH SOL C	CN55-7	
24	EXT	CN50-6A		ADV CONT	CN50-6B		PINCH SOL B	CN55-8	
25	INT	CN50-5B	B2-7C	TAPE R/P	CN50-4A		T BRAKE SOL C	CN55-9	
26	SEARCH	CN50-3A		AT MODE	CN50-3B		T BRAKE SOL B	CN55-10	
27	FAN TROL	CN50-2B		ADV 1	CN50-2A		S BRAKE SOL C	CN55-11	
28	AUTO OFF LED	CN50-1B		R FRAMING	CN50-1A		S BRAKE SOL B	CN55-12	
29	(DUB CF ON)	CN50-8A		V PHASE 1	CN50-10B		CLEANING SOL C	CN55-13	
30	EJECT TAPE	CN50-5A		CF SELECT 3	CN50-7B		UNREG GND	POWER10-6	
31	+5V			←			←	POWER10-1	
32	GND			←			←	POWER10-4	

VJP1393T

CN57		FROM / TO			
1	SERIAL CLK	CN50-29B	CN310-1	CN53-3A	B1-R7A
2	STRB CLK 16	CN50-28A	CN310-2	CN53-2B	B1-R8A
3	SERIAL DATA MEC	B1-R10C			
4	GND				
5	TR PHOTO 1	B1-R12C			
6	TR PHOTO 2	B1-R13C			
7	GND				
8	S REEL PULSE 1	B1-R12A	CN610-1		
9	S REEL PULSE 2	B1-R13A			
10	T REEL PULSE 1	B1-R12B	CN610-2		
11	T REEL PULSE 2	B1-R13B			
12	+5V	POWER10-1			
13	+5V	POWER10-1			

VJP1391T

CN55		FROM / TO		
1	LOADING M +	B1-R17C		
2	LOADING M -	B1-R18C		
3	SMALL R M -	B1-R19C		
4	SMALL R M +	B1-R20C		
5	ELAVATOR M -	B1-R21C		
6	ELAVATOR M +	B1-R22C		
7	PINCH SOL C	B1-R23C		
8	PINCH SOL B	B1-R24C		
9	T BRAKE SOL C	B1-R25C		
10	T BRAKE SOL B	B1-R26C		
11	S BRAKE SOL C	B1-R27C		
12	S BRAKE SOL B	B1-R28C		
13	CLEANING SOL C	B1-R29C		
14	+24V	POWER10-5		

REVERSE SIDE **AUDIO SCHEMATIC DIAGRAM**

MODEL / TYPE	AU-665	AU-65	AU-63	AU-62
NTSC	VEP80549B	VEP80549A	VEP80549B	VEP80549A
PAL	VEP80549C	VEP80549A	VEP80549B	VEP80549A

B0 (B,MOTHER) SCHEMATIC DIAGRAM 2/2

VJP1230T (PCM ONLY)

CN310		FROM / TO			
1	SERIAL CLK	CN50-29B	CN57-1	CN53-3A	B1-R7A
2	STRB CLK 16	CN50-28A	CN57-2	CN53-2B	B1-R8A
3	SERIAL DATA PCM	B1-R9C			

VJP1230T (PCM ONLY)

CN311		FROM / TO		
1	DIGITAL SW	B1-L16C		
2	ANALOG SW	B1-L17C		
3	PCM LED	B1-R16A		

VJP1229T (PAL ONLY)

CN410		FROM / TO	
1	PLAY /(LOADING MUT)	CN50-22B	B1-L31A
2	CUE	B1-L31B	

VJP1230T (SPARE)

CN610		FROM / TO	
1	T REEL PULSE 1	CN57-10	B1-R12B
2	S REEL PULSE 1	CN57-8	B1-R12A
3	CAP OVERIDE	CN53-1A	

VJP1709

POWER10		FROM / TO	
1	+5V		
2	+11.5V		
3	+14.6V		
4	GND		
5	+24V		
6	UNREG GND		

C2 50V 0.047

B2
VJS2899A096

B2 TCG/TCR (OPTION)

L (LEFT)	A			B			C			
1	GND			←			←			
2	+5V			←			←			
3	REF VIDEO IN	CN54-10		DUB CF IN	CN54-11		+7.5V	B1-L3C	CN51-6	
4	GND	CN54-9,12		GND	CN54-9,12		+14.5V	B1-L4C		
5	B5	CN54-13		DUB CF	CN59-13		REF VIDEO	CN59-14		
6	GND			GND			GND	CN59-15		
7	REF SCH	B1-R21B	CN50-10A	REF DET	B1-R21A	CN50-11B	INT	B1-R25A	CN50-5B	
8	D0L	B1-L8B		D1L	B1-L8A		CS DL	B1-L6C		
9	D2L	B1-L7B		D3L	B1-L7A		ME WR	B1-L6C		
10	D4L	B1-L6B		D5L	B1-L6A		ME RD	B1-L7C		
11	D6L	B1-L5B		D7L	B1-L5A		SYS INT	B1-L8C		
12	A0L	B1-L9A		A1L	B1-L9B		TC INT	B1-L9C		
13	A2L	B1-L10A		A3L	B1-L10B		TAPE FWD	B1-L10C	CN50-20A	
14	A4L	B1-L11A		A5L	B1-L11B		+11.5V	B1-L11C	CN53-10B	POWER10-2
15	A6L	B1-L12A		A7L	B1-L12B		ADV 2	B1-L15C	CN50-4B	
16	GND			GND			GND			
17	REC VITC	CN58-2					VIGE	CN58-3		
18	COMP SYNC	CN58-5					VP REC	CN58-6		
19	GND	CN58-1,4					GND	CN58-1,4		
20	Y PB 2	CN58-8					5 FRAMING	B1-R6A	CN50-30A	
21	GND	CN58-7					GND			
22	R SYNC	CN59-1					RVP	CN59-2	B1-L30C	
23	TC CF	CN59-7					GND	CN59-3,6		
24	TAPE V	CN59-5					Y PB SYNC	CN59-4		
25	FRAMING /4	B1-R5C	CN50-29A				GND	CN59-3,6		
26	FRAMING /2	B1-R6B	CN50-30B				CTL PULSE	B1-R3C	CN50-31A	CN53-1B
27	TCG/TCR DN	CN50-32A					GND			
28	TCR EXT	CN52-1					TCR PB	CN52-3		
29	GND						GND			
30	TCG/TCR	CN52-4					TCG/TCR GND	CN52-2,5		
31							-7.6V			
32	GND			←			←			

VJP2893A064

CN50										
FROM / TO				A	NO	B	FROM / TO			
B1-R20B				R FRAMING	1	AUTO OFF LED	B1-R20A			
B1-R27B				ADV 1	2	FRM TRBL	B1-R27A			
B1-R26A				SEARCH	3	AT MODE	B1-R26B			
B1-R25B				TAPE R/P	4	ADV2	B1-L16C	B2-L16C		
B1-R30A				EJECT TAPE	5	INT	B1-R25A	B2-L7C		
B1-R24A				EXT	6	ADV CONT	B1-R24B			
B1-R23B				CF SELECT 2	7	CF SELECT 3	B1-R30B			
B1-R29A				(DUB CF ON)	8	CF SELECT 1	B1-R23A			
B1-R22A				C OFF	9	FRM ON	B1-R22B			
B1-R21B	B2-L7A			REF SCH	10	V PHASE 1	B1-R29B			
B1-L17A				(DUB)	11	REF DET	B1-R21A	B2-L7B		
B1-R20A				STD	12	LINE	B1-R20B			
B1-R19B				V PHASE CF	13	PHASE INH	B1-L17B			
B1-L16B				PCM DET	14	TD OFF	B1-R19A			
B1-R18A				AT SPEED	15	LOW RF	B1-R18B			
B1-R17B				(VIDEO IN)/(CHI MOT)	16	VISC ON	B1-R16C			
B1-R15C				N-STD AUTO	17	Y/C	B1-R17A			
B1-R16A				IN SCH	18	(CPNT CF ON)/(CHI SPEED ATT2)	B1-R16B			
B1-R15B				(DUB IN)/(HI SPEED ATT1)	19	SERVO LOCK	B1-R14C			
B1-L10C	B2-L13C			TAPE TWO	20	EJECT LED	B1-L13C			
B1-L28B				-14.5V	21	TR FIX2	B1-R14B			
B1-L30B				-11.5V	22	PLAY/(LOADING MUT)	B1-L31A	CN410-1		
B1-R11B				CAP FWD	23	TC DETECT	B1-R11C			
B1-R10B				SERIAL DATA TIM	24	RE START	B1-R11A			
B1-R9B				SERIAL DATA REL	25	SERIAL DATA FRT	B1-R10A			
B1-R8B				SERIAL DATA DRM	26	SERIAL DATA AUD/FM ATT	B1-R9C			
B1-R7B				SERIAL DATA CAP	27	SERIAL DATA SRV	B1-R7C			
B1-R8A	CN310-2	CN53-2B	CN57-2	STRB CLK 16	28	STRB CLK 8	B1-R9A			
B1-R6C	B2-L25A			FRAMING /4	29	SERIAL CLK	B1-R7A	CN310-1	CN53-3A	CN57-1
B1-R5A	B2-L20C			5 FRAMING	30	FRAMING /2	B1-R6B	B2-26A		
B1-R3C	B2-L26C	CN53-1B		CLT PULSE	31	R/P HEAD	B1-R4B			
B2-27A				TCG/TCR DN	32	PINCH ON	B1-R3A			

5-2-27

SYSTEM CONTROL SCHEMATIC DIAGRAM

TYPE \ MODEL	AU-665	AU-65	AU-63	AU-62
NTSC	VEP86088B	VEP86088A	VEP86088D	VEP86088C
PAL	VEP86088N	VEP86088E	VEP86088F	VEP86088M

B1 (SYSTEM CONTROL) SCHEMATIC DIAGRAM 1/6

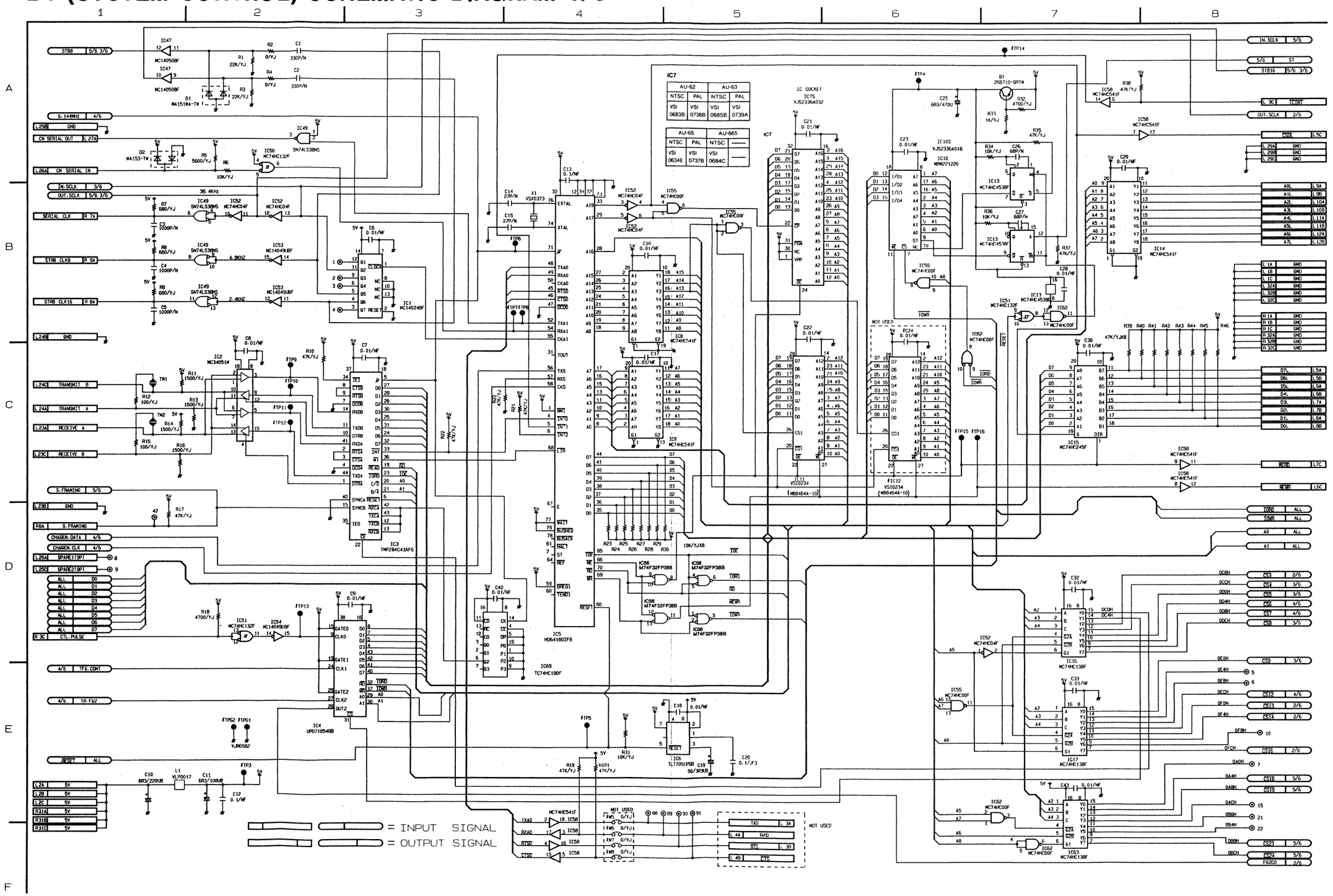

REVERSE SIDE **B. MOTHER SCHEMATIC DIAGRAM**

5-2-28

TYPE \ MODEL	AU-665	AU-65	AU-63	AU-62
NTSC	VEP86088B	VEP86088A	VEP86088D	VEP86088C
PAL	VEP86088N	VEP86088E	VEP86088F	VEP86088M

B1 (SYSTEM CONTROL) SCHEMATIC DIAGRAM 2/6

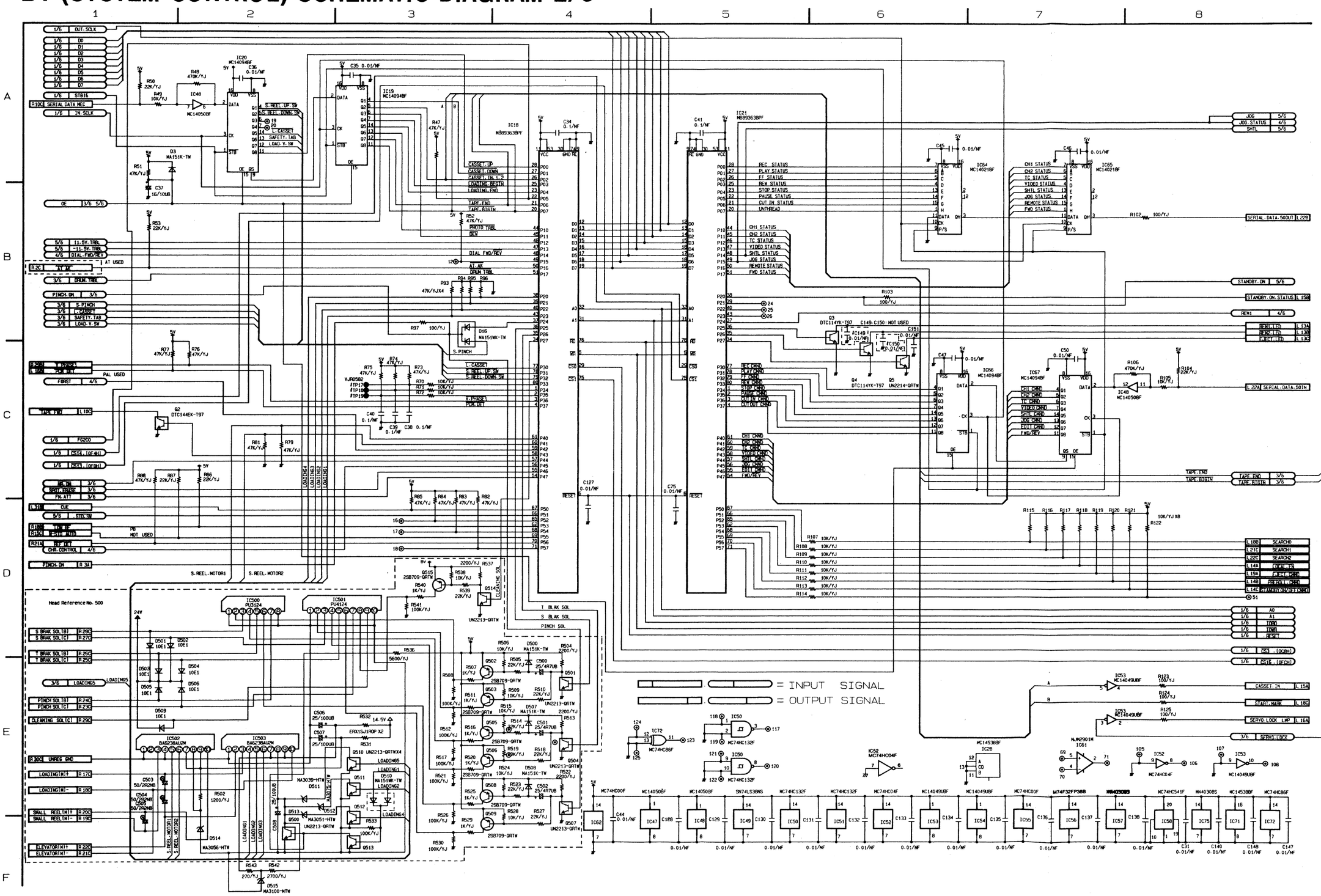

B1 (SYSTEM CONTROL) SCHEMATIC DIAGRAM 3/6

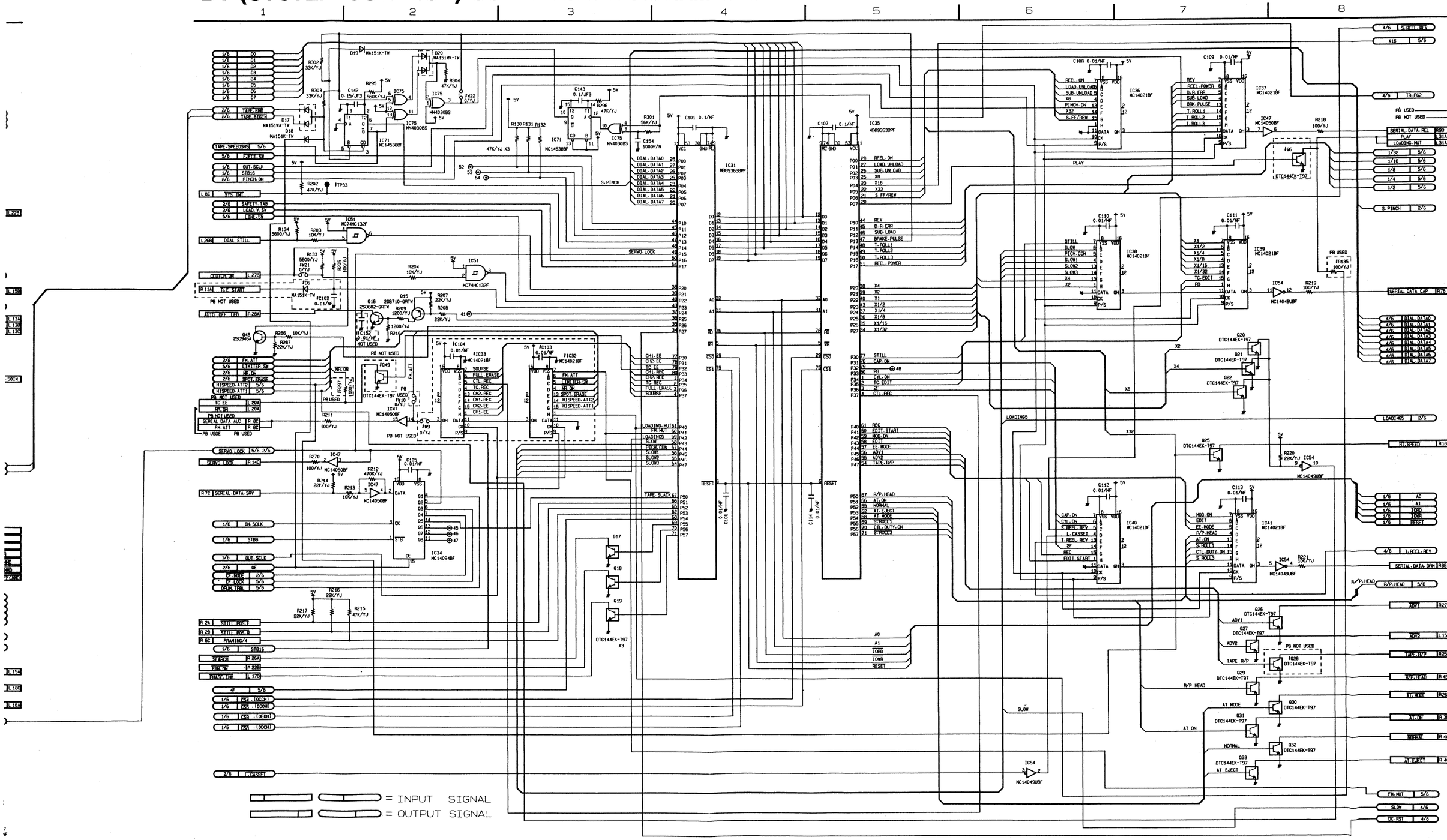

TYPE \ MODEL	AU-665	AU-65	AU-63	AU-62
NTSC	VEP86088B	VEP86088A	VEP86088D	VEP86088C
PAL	VEP86088N	VEP86088E	VEP86088F	VEP86088M

B1 (SYSTEM CONTROL) SCHEMATIC DIAGRAM 4/6

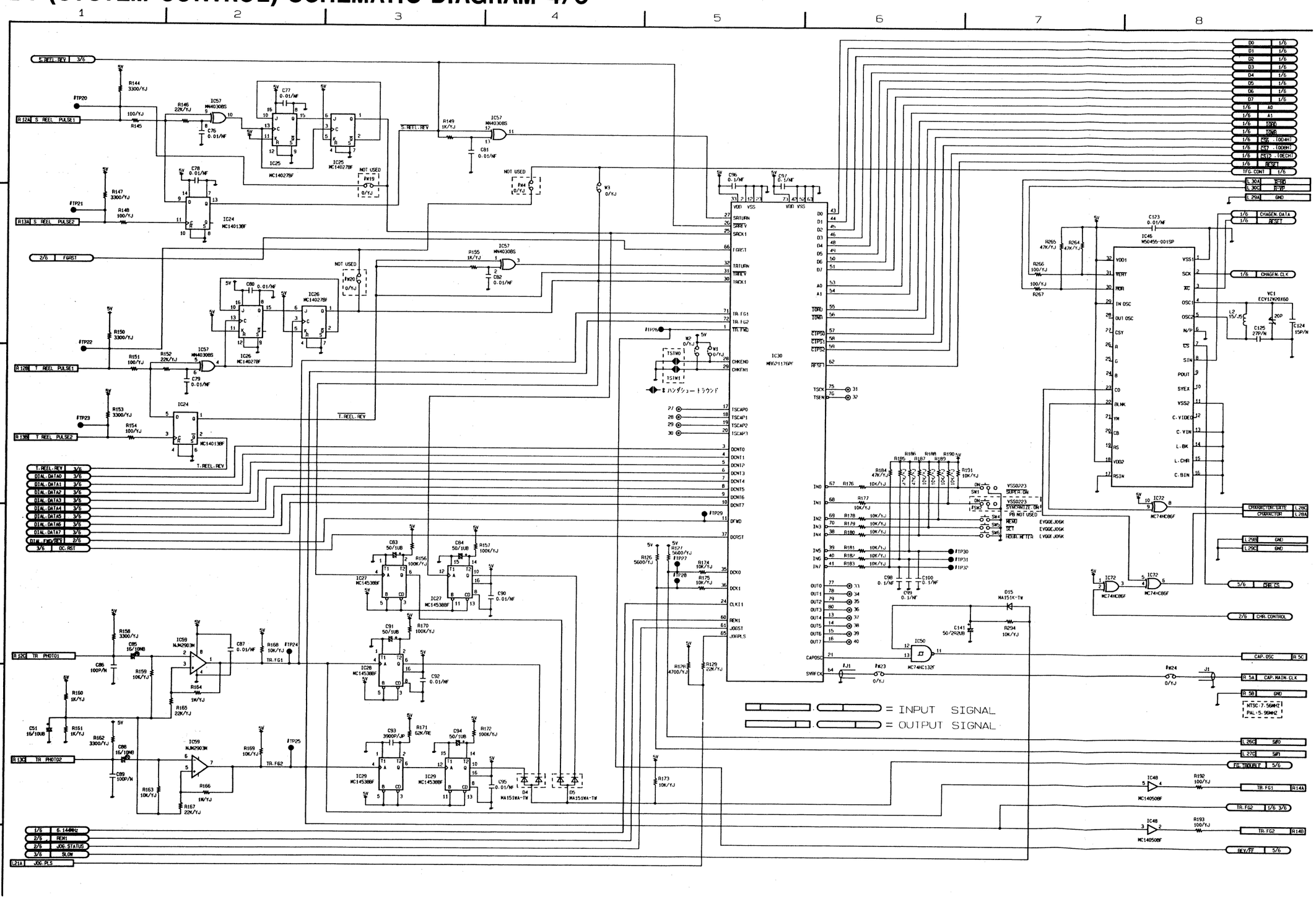

REVERSE SIDE SYSTEM CONTROL SCHEMATIC DIAGRAM

B1 (SYSTEM CONTROL) SCHEMATIC DIAGRAM 5/6

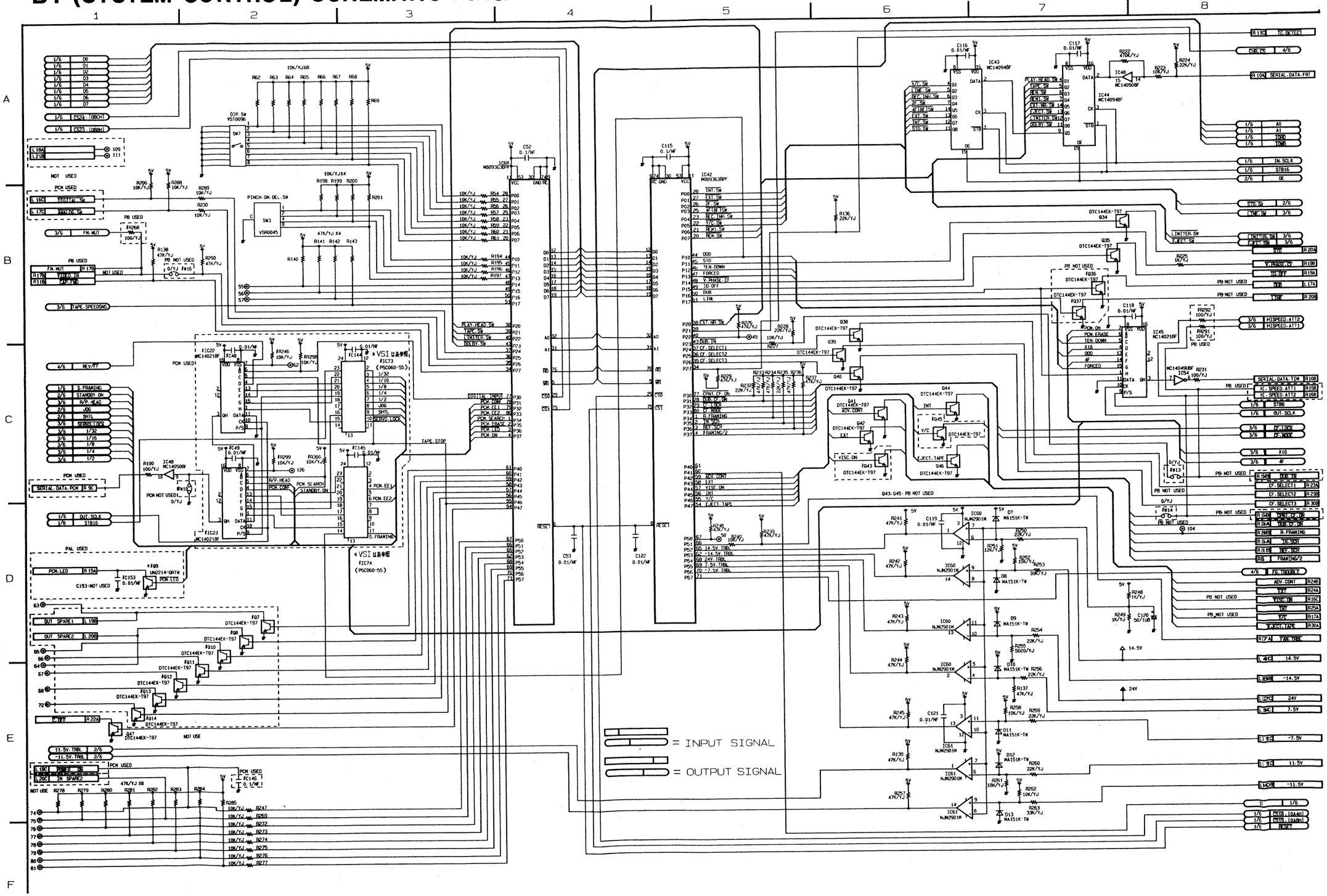

MODEL / TYPE	AU-665	AU-65	AU-63	AU-62
NTSC	VEP86088B	VEP86088A	VEP86088D	VEP86088C
PAL	VEP86088N	VEP86088E	VEP86088F	VEP86088M

B1 (SYSTEM CONTROL) SCHEMATIC DIAGRAM 6/6

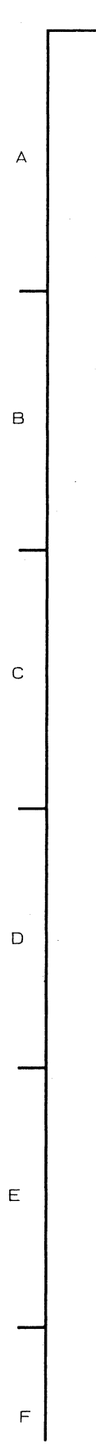

REF NO	AU-65 NTSC	AU-65 PAL	AU-62 NTSC	AU-62 PAL	AU-665 NTSC	AU-665 PAL	AU-63 NTSC	AU-63 PAL	AU-760 NTSC	AU-760 PAL
C241(0.01/NF)	—	—	—	—	—		—	—		—
C48	—	—	—	—	—		—	—		0.01/NF
C49	—	—	—	—	—		—	—		0.01/NF
C102	0.01/NF	0.01/NF	—	—	0.01/NF		—	—		0.01/NF
C103	0.01/NF	0.01/NF	—	—	0.01/NF		—	—		0.01/NF
C104	0.01/NF	0.01/NF	—	—	0.01/NF		—	—		0.01/NF
C144	—	—	—	—	—		—	—		0.01/NF
C145	—	—	—	—	—		—	—		0.01/NF
C146	—	—	—	—	—		—	—		0.1/NF
C149(0.01/NF)	—	—	—	—	—		—	—		—
C150(0.01/NF)	—	—	—	—	—		—	—		—
C152(0.01/NF)	—	—	—	—	—		—	—		—
C153(0.01/NF)	—	—	—	—	—		—	—		—
D6	MA151K-TW	MA151K-TW	—	—	MA151K-TW		—	—		MA151K-TW
IC12(VSI0234)	—	—	—	—	—		—	—		—
IC22	—	—	—	—	—		—	—		MC14021BF
IC23	—	—	—	—	—		—	—		MC14021BF
IC32	MC14021BF	MC14021BF	—	—	MC14021BF		—	—		MC14021BF
IC33	MC14021BF	MC14021BF	—	—	MC14021BF		—	—		MC14021BF
IC73	—	—	—	—	—		—	—		(PSD060-66)
IC74	—	—	—	—	—		—	—		(PSD060-66)
J15	—	—	—	—	—		—	—		—
Q6	—	DTC144EK-TR	—	—	—		—	—		DTC144EK-TR
Q7(DTC144EK-TR)	—	—	—	—	—		—	—		—
Q8(DTC144EK-TR)	—	—	—	—	—		—	—		—
Q9	—	UN5214-(BTR)	—	UN5214-(BTR)	—		—	UN5214-(BTR)		UN5214-(BTR)
Q10(DTC144EK-TR)	—	—	—	—	—		—	—		—
Q11(DTC144EK-TR)	—	—	—	—	—		—	—		—
Q12(DTC144EK-TR)	—	—	—	—	—		—	—		—
Q13(DTC144EK-TR)	—	—	—	—	—		—	—		—
Q14(DTC144EK-TR)	—	—	—	—	—		—	—		—
Q28	DTC144EK-TR	DTC144EK-TR	—	—	DTC144EK-TR		—	—		DTC144EK-TR
Q36	DTC144EK-TR	DTC144EK-TR	—	—	DTC144EK-TR		—	—		DTC144EK-TR
Q37	DTC144EK-TR	DTC144EK-TR	—	—	DTC144EK-TR		—	—		DTC144EK-TR
Q43	DTC144EK-TR	DTC144EK-TR	—	—	DTC144EK-TR		—	—		DTC144EK-TR
Q45	DTC144EK-TR	DTC144EK-TR	—	—	DTC144EK-TR		—	—		DTC144EK-TR
Q49	DTC144EK-TR	DTC144EK-TR	—	—	DTC144EK-TR		—	—		DTC144EK-TR
R135	—	—	100/YJ	100/YJ	—		100/YJ	100/YJ		—
R246	—	—	—	—	—		—	—		10K/YJ
R258	—	—	100/YJ	100/YJ	—		100/YJ	100/YJ		—
R291	—	—	100/YJ	100/YJ	—		100/YJ	100/YJ		—
R297	—	—	100/YJ	100/YJ	—		100/YJ	100/YJ		—
R298	—	—	—	—	—		—	—		10K/YJ
R299	—	—	—	—	—		—	—		10K/YJ
H300	—	—	—	—	—		—	—		10K/YJ

REF NO	AU-65 NTSC	AU-65 PAL	AU-62 NTSC	AU-62 PAL	AU-665 NTSC	AU-665 PAL	AU-63 NTSC	AU-63 PAL	AU-760 NTSC	AU-760 PAL
W4(0/YJ)	—	—	—	—	—		—	—		—
W5(0/YJ)	—	—	—	—	—		—	—		—
W6(0/YJ)	—	—	—	—	—		—	—		—
W7(0/YJ)	—	—	—	—	—		—	—		—
W8(0/YJ)	—	—	—	—	—		—	—		—
W9	0/YJ	0/YJ	—	—	0/YJ		—	—		0/YJ
W10	—	—	0/YJ	0/YJ	—		0/YJ	0/YJ		—
W13	0/YJ	0/YJ	—	—	0/YJ		—	—		0/YJ
W14	0/YJ	0/YJ	—	—	0/YJ		—	—		0/YJ
W16	0/YJ	0/YJ	—	—	0/YJ		—	—		0/YJ
W18	0/YJ	0/YJ	0/YJ	0/YJ	0/YJ		0/YJ	0/YJ		—
W19(0/YJ)	—	—	—	—	—		—	—		—
W20(0/YJ)	—	—	—	—	—		—	—		—
W21(0/YJ)	—	—	—	—	—		—	—		—
W22(0/YJ)	—	—	—	—	—		—	—		—
W23	0/YJ	0/YJ	0/YJ	0/YJ	0/YJ		0/YJ	0/YJ		0/YJ
W24	0/YJ	0/YJ	0/YJ	0/YJ	0/YJ		0/YJ	0/YJ		0/YJ
TPG1	VJR0582	VJR0582	VJR0582	VJR0582	VJR0582		VJR0582	VJR0582		VJR0582
TPG2	VJR0582	VJR0582	VJR0582	VJR0582	VJR0582		VJR0582	VJR0582		VJR0582
TP3(VJR0582)	—	—	—	—	—		—	—		—
TP4(VJR0582)	—	—	—	—	—		—	—		—
TP5(VJR0582)	—	—	—	—	—		—	—		—
TP6(VJR0582)	—	—	—	—	—		—	—		—
TP7(VJR0582)	—	—	—	—	—		—	—		—
TP8(VJR0582)	—	—	—	—	—		—	—		—
TP9(VJR0582)	—	—	—	—	—		—	—		—
TP10(VJR0582)	—	—	—	—	—		—	—		—
TP11(VJR0582)	—	—	—	—	—		—	—		—
TP12(VJR0582)	—	—	—	—	—		—	—		—
TP13(VJR0582)	—	—	—	—	—		—	—		—
TP14(VJR0582)	—	—	—	—	—		—	—		—
TP15(VJR0582)	—	—	—	—	—		—	—		—
TP16(VJR0582)	—	—	—	—	—		—	—		—
TP17	VJR0582	VJR0582	VJR0582	VJR0582	VJR0582		VJR0582	VJR0582		VJR0582
TP18	VJR0582	VJR0582	VJR0582	VJR0582	VJR0582		VJR0582	VJR0582		VJR0582
TP19	VJR0582	VJR0582	VJR0582	VJR0582	VJR0582		VJR0582	VJR0582		VJR0582
TP20(VJR0582)	—	—	—	—	—		—	—		—
TP21(VJR0582)	—	—	—	—	—		—	—		—
TP22(VJR0582)	—	—	—	—	—		—	—		—
TP23(VJR0582)	—	—	—	—	—		—	—		—
TP24(VJR0582)	—	—	—	—	—		—	—		—
TP25(VJR0582)	—	—	—	—	—		—	—		—
TP26(VJR0582)	—	—	—	—	—		—	—		—
TP27(VJR0582)	—	—	—	—	—		—	—		—
TP28(VJR0582)	—	—	—	—	—		—	—		—
TP29(VJR0582)	—	—	—	—	—		—	—		—
TP30(VJR0582)	—	—	—	—	—		—	—		—
TP31(VJR0582)	—	—	—	—	—		—	—		—
TP32(VJR0582)	—	—	—	—	—		—	—		—
TP33(VJR0582)	—	—	—	—	—		—	—		—
SW2	VSS0223	VSS0223	—	—	VSS0223		—	—		VSD223

	LAST NO	NOT USED
SW	7	
IC	75	70
Q	49	23. 24
D	20	14
R	304	78. 80. 89. 90. 91. 92. 98. 99. 293
C	154	54- 74 126 139
L	2	
X	1	
J	1	
VC	1	
TP	33	1. 2
TPG	2	
W	24	11. 12. 15. 17
THROU HOLE	126	11. 13. 14. 23. 42. 43. 58. 59. 60. 61. 73. 82. 83. 84. 85. 86 87. 110. 92- 103. 112. 113. 44. 114. 115. 116

Ref. No. 500~

R	543	500. 501. 503. 534. 535
Q	515	
D	515	
C	508	
IC	503	

5-2-31

TYPE \ MODEL	AU-665	AU-65	AU-63	AU-62
NTSC	VEP86089B	Refer to AU-F65 Section		
PAL	VEP86089F			

B2 (TC & BB) SCHEMATIC DIAGRAM 1/3[FOR AU-665]

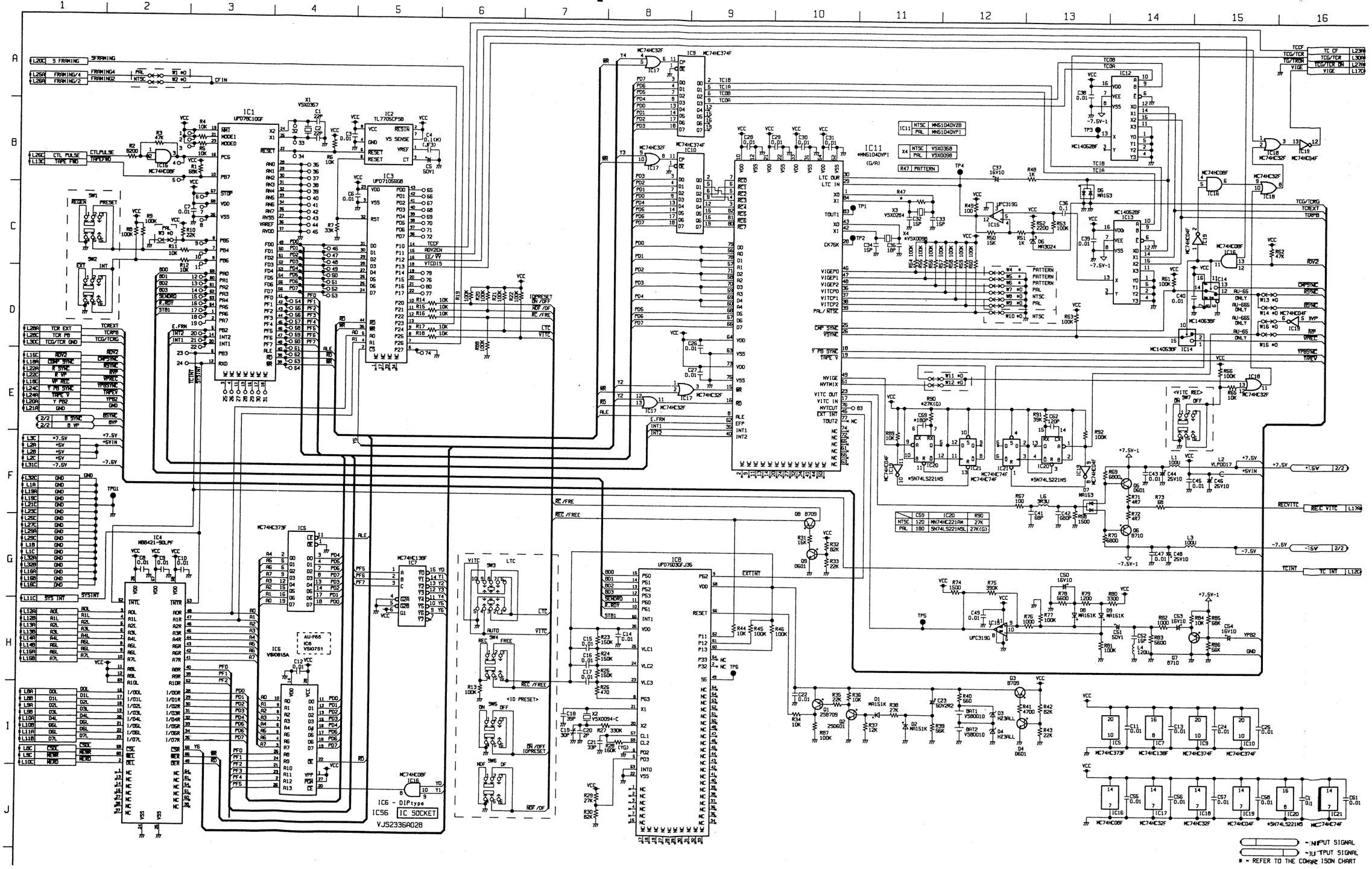

TYPE \ MODEL	AU-665	AU-65	AU-63	AU-62
NTSC	VEP86089B	Refer to AU-F65 Section		
PAL	VEP86089F			

B2 (TC & BB) SCHEMATIC DIAGRAM 2/3 [FOR AU-665]

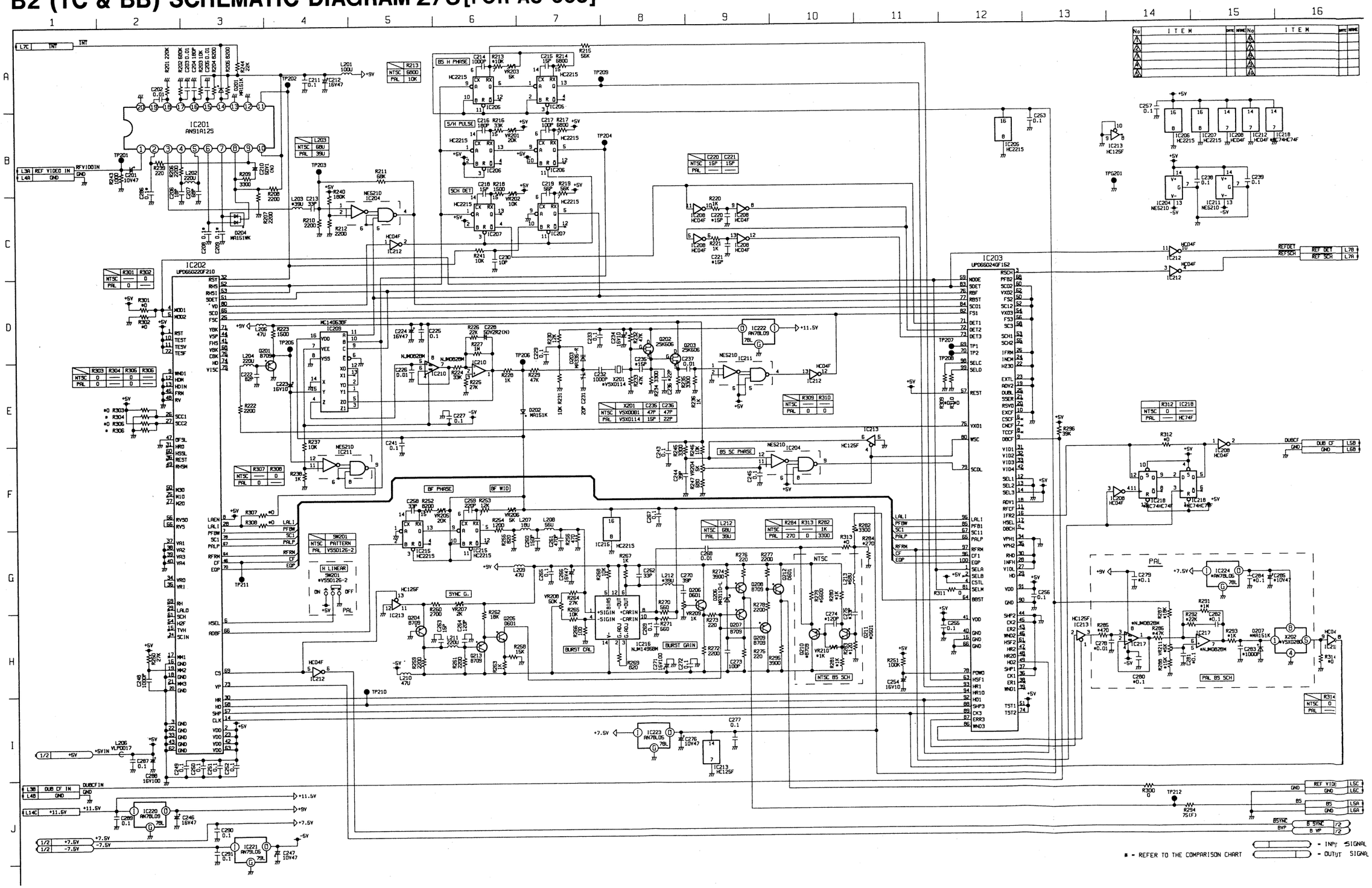

B2 (TC & BB) SCHEMATIC DIAGRAM 3/3[FOR AU-665]

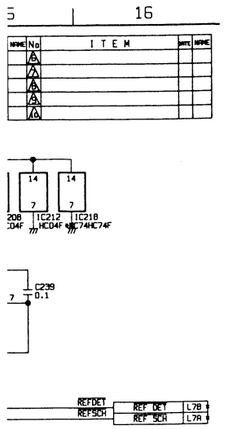

B2L
VJP2868

B2	TCG/TCR (OPTION)											
L (LEFT)	A				B				C			
1	GND				←				←			
2	+5V				←				←			
3	REF VIDEO IN	CN54-10			DUB CF IN	CN54-11			+7.5V			
4	GND	CN54-9,12			GND	CN54-9,12			+14.5V			
5	B5	CN54-13			DUB CF	CN60-13			REF VIDEO	CN60-14		
6	GND				GND				GND	CN60-15		
7	$\overline{\text{REF SCH}}$	B1-R21B	CN50-10A		$\overline{\text{REF DET}}$	B1-R21A	CN50-11B		$\overline{\text{INT}}$	B1-R25A	CN50-5B	
8	D0L	B1-L5A			D1L	B1-L5B			$\overline{\text{CS DL}}$	B1-L5C		
9	D2L	B1-L6A			D3L	B1-L6B			$\overline{\text{ME WR}}$	B1-L6C		
10	D4L	B1-L7A			D5L	B1-L7B			$\overline{\text{ME RD}}$	B1-L7C		
11	D6L	B1-L8A			D7L	B1-L8B			$\overline{\text{SYS INT}}$	B1-L8C		
12	A0L	B1-L9A			A1L	B1-L9B			$\overline{\text{TC INT}}$	B1-L9C		
13	A2L	B1-L10S			A3L	B1-L10B			$\overline{\text{TAPE FWD}}$	B1-L10C		
14	A4L	B1-L11A			A5L	B1-L11B			+11.5V	B1-L11C		
15	A6L	B1-L12A			A7L	B1-L12B			$\overline{\text{ADV 2}}$	B1-L15A	CN50-4B	
16	GND				GND				GND			
17	$\overline{\text{REC VITC}}$	CN62-1						x	VIGE	CN62-5		
18	$\overline{\text{COMP SYNC}}$	CN62-3						x	$\overline{\text{VP REC}}$	CN62-7		
19	GND	CN62-2,4						x	GND	CN62-6,8		
20	Y PB 2	CN62-9						x	5 FRAMING	B1-R6A	CN50-30A	
21	GND	CN62-10						x	GND			
22	$\overline{\text{R SYNC}}$	CN60-1						x	$\overline{\text{RVP}}$	CN60-3	CN50-30A	
23	TC CF	CN60-9						x	GND			
24	$\overline{\text{TAPE V}}$	CN60-7						x	$\overline{\text{Y PB SYNC}}$	CN60-5		
25	FRAMING/4	B1-R6C	CN50-29A					x	GND			
26	FRAMING/2	B1-R6B	CN50-30B					x	CTL PULSE	B1-R3C	CN50-31A	CN53-1B
27	$\overline{\text{TCG/TCR ON}}$	CN50-32A						x	GND			
28	TCR EXT	CN61-1						x	TCR PB	CN61-3		
29	GND							x	GND			
30	TCG/TCR	CN61-4						x	TCG/TCR GND	CN61-2,5		
31				x				x	-7.5V			
32	GND				←				←			

TYPE \ MODEL	AU-665	AU-65	AU-63	AU-62
NTSC	VEP85018A	Not Used	Not Used	Not Used
PAL	VEP85018B	Not Used	Not Used	Not Used

A.T H.A SCHEMATIC DIAGRAM [FOR AU-665]

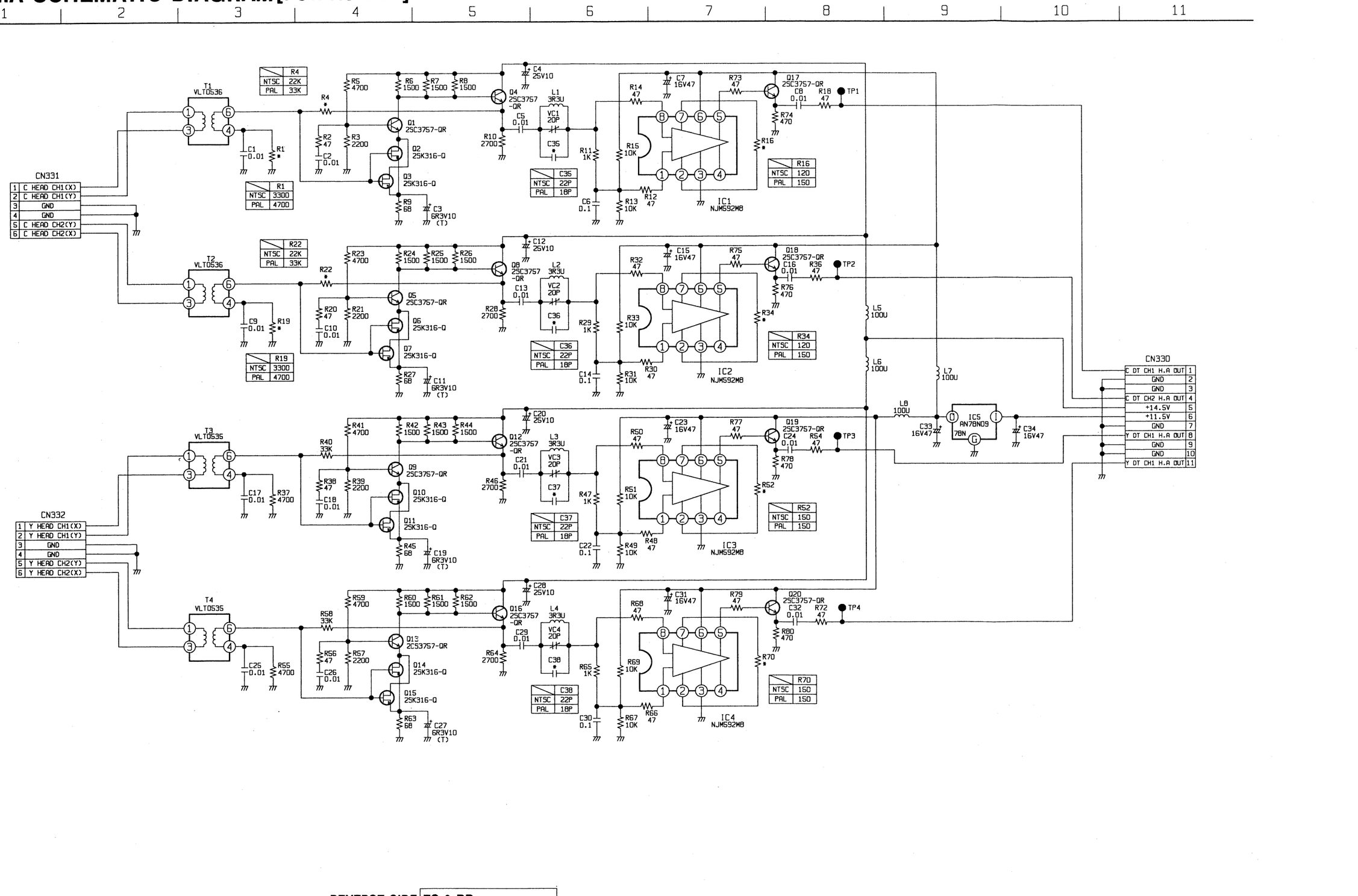

REVERSE SIDE **TC & BB SCHEMATIC DIAGRAM**

TYPE \ MODEL	AU-665	AU-65	AU-63	AU-62
NTSC	VEP82062A	Not Used	VEP82062A	Not Used
PAL	VEP82062A	Not Used	VEP82062A	Not Used

AT POWER SCHEMATIC DIAGRAM[FOR AU-665,AU-63]

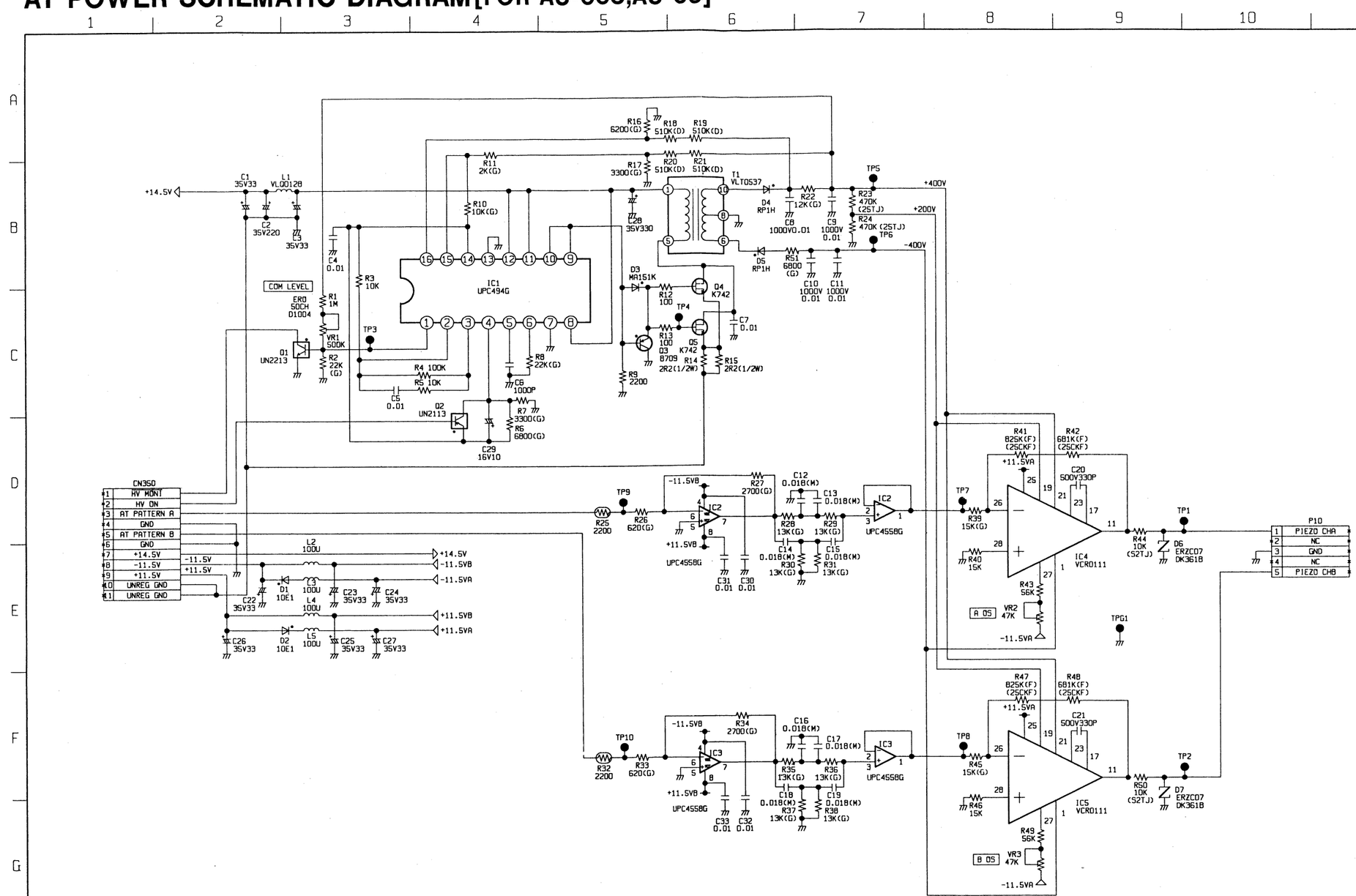

MODEL / TYPE	AU-665	AU-65	AU-63	AU-62
NTSC	VEP84094B	VEP84094A	VEP84094C	VEP84094C
PAL	VEP84094D	VEP84094A	VEP84094C	VEP84094C

AUDIO I/O SCHEMATIC DIAGRAM 1/2

AUDIO I/O SCHEMATIC DIAGRA

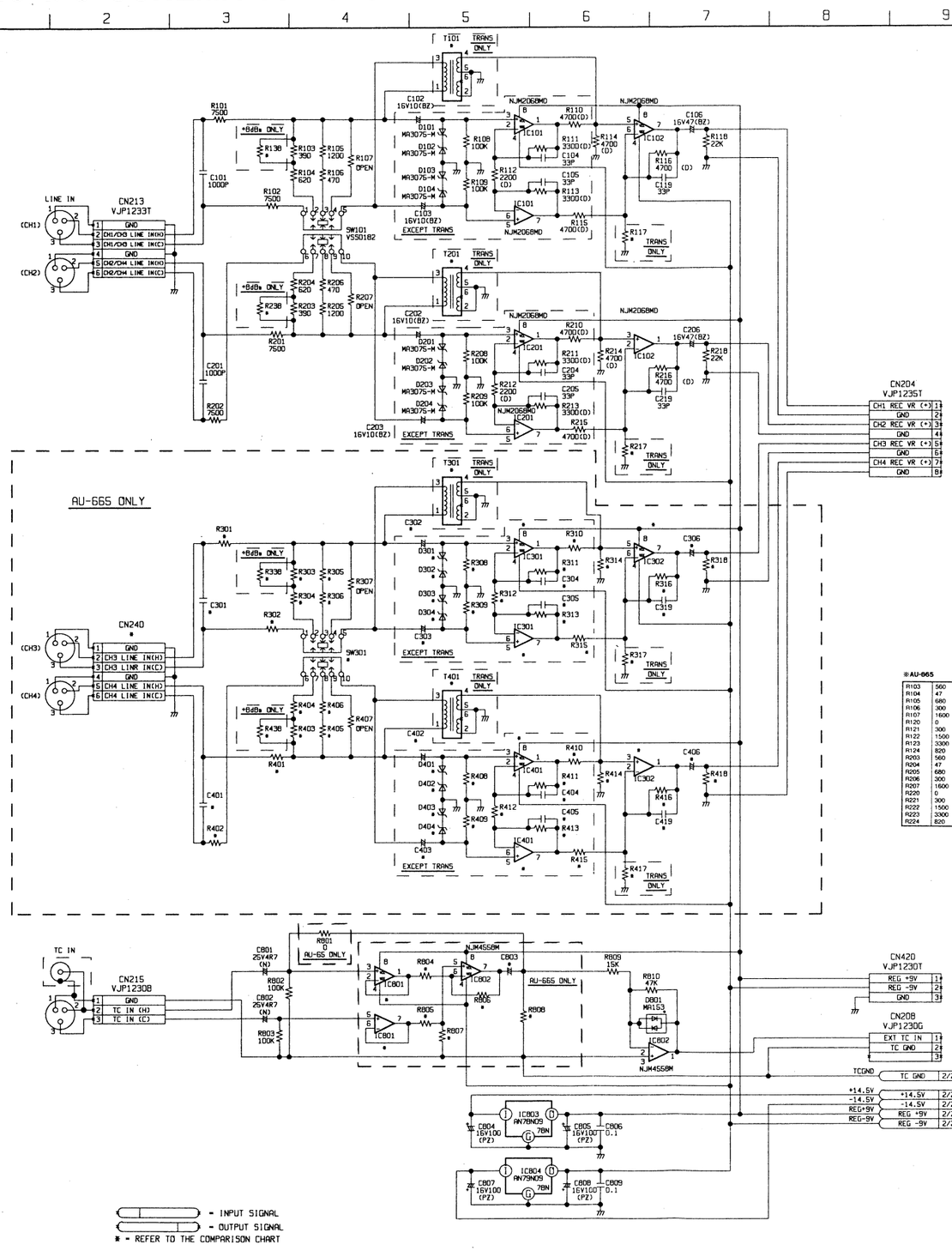

*AU-665

R103	560	R303	560
R104	47	R304	47
R105	680	R305	680
R106	300	R306	300
R107	1600	R307	1600
R120	0	R320	0
R121	300	R321	300
R122	1500	R322	1500
R123	3300	R323	3300
R124	820	R324	820
R203	560	R403	560
R204	47	R404	47
R205	680	R405	680
R206	300	R406	300
R207	1600	R407	1600
R220	0	R420	0
R221	300	R421	300
R222	1500	R422	1500
R223	3300	R423	3300
R224	820	R424	820

C DIAGRAM 2/2

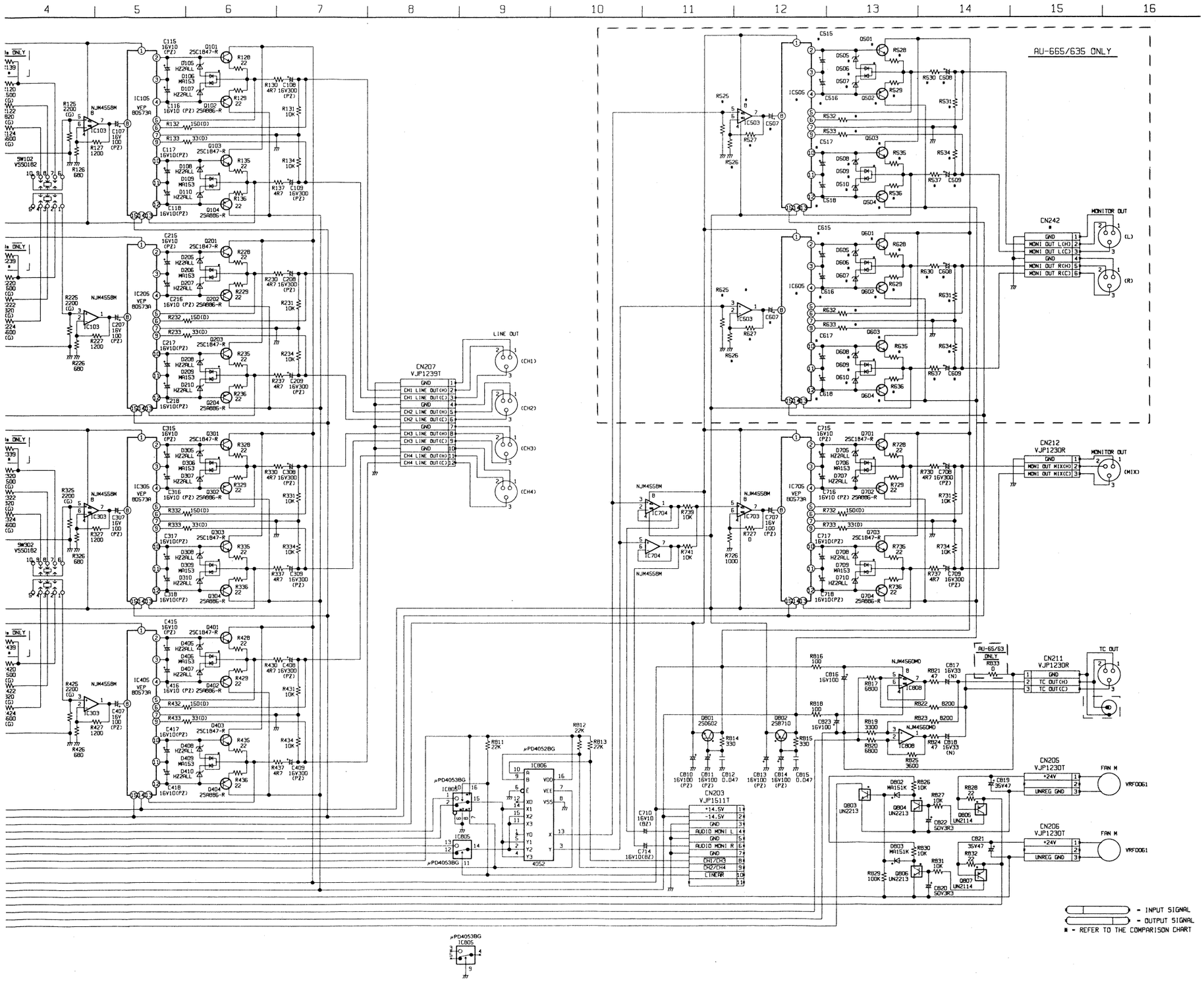

AUDIO I/O (SUB) SCHEMATI

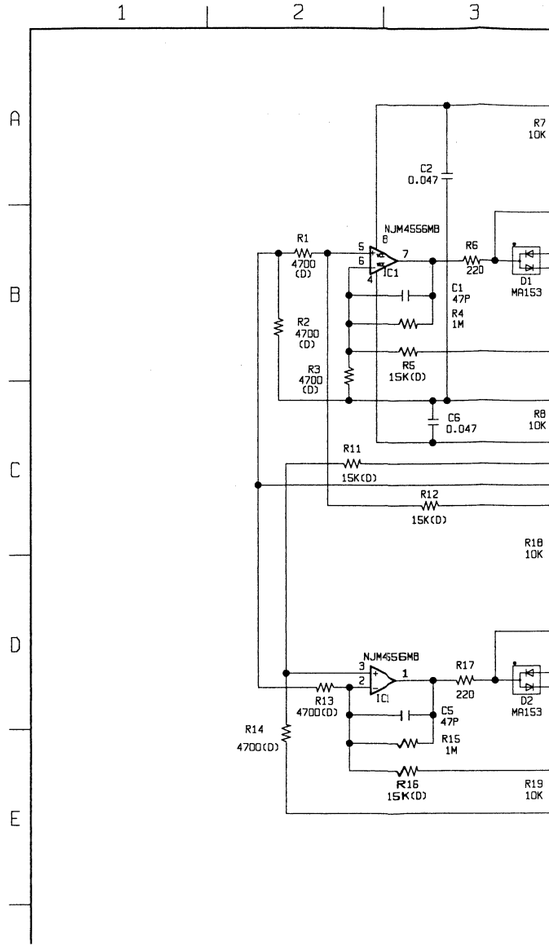

TYPE \ MODEL	AU-665	AU-65	AU-63	AU-62
NTSC	VEP80573A	VEP80573A	VEP80573A	VEP80573A
PAL	VEP80573A	VEP80573A	VEP80573A	VEP80573A

AUDIO I/O (SUB) SCHEMATIC DIAGRAM

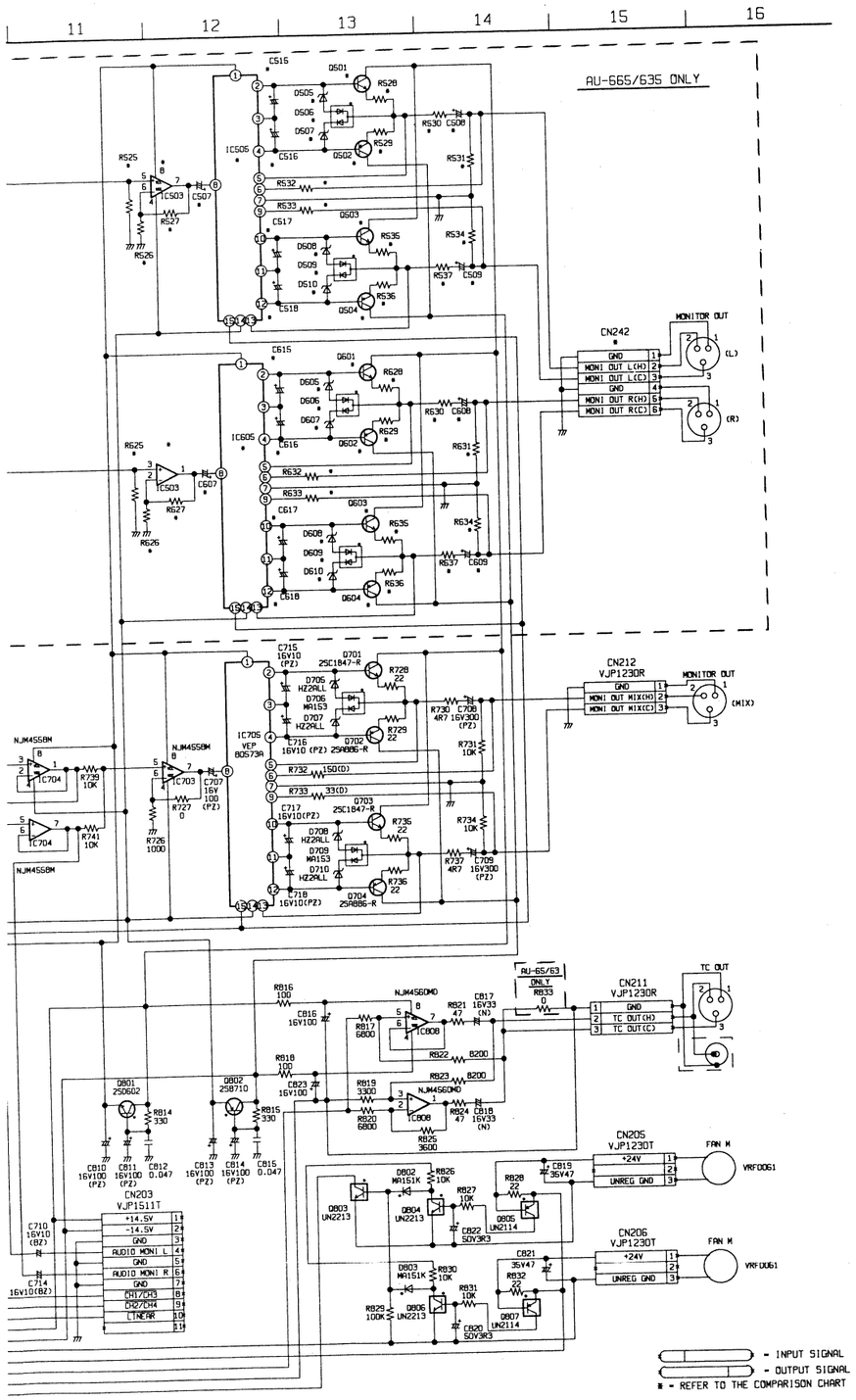

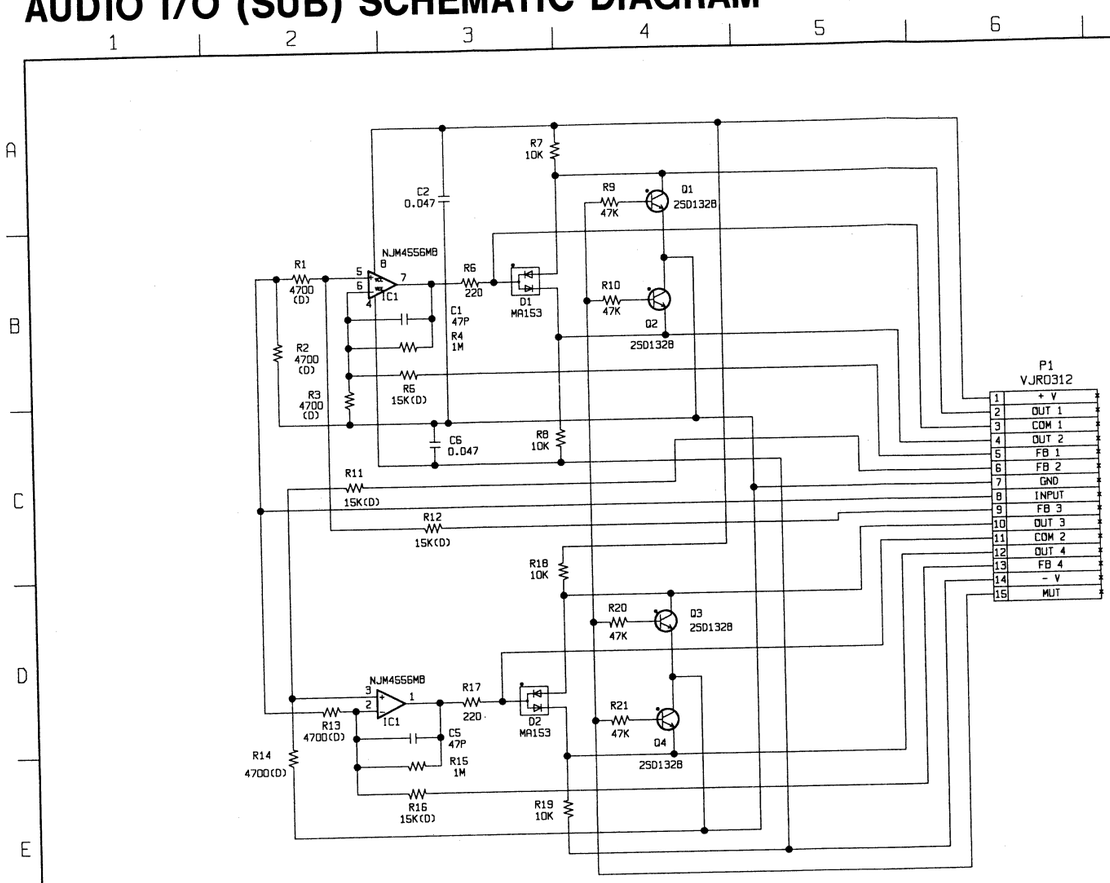

TYPE \ MODEL	AU-665	AU-65	AU-63	AU-62
NTSC	VEP84103B	Not Used	Not Used	Not Used
PAL	VEP84103A	Not Used	Not Used	Not Used

AUDIO INPUT SW SCHEMATIC DIAGRAM[FOR AU-665]

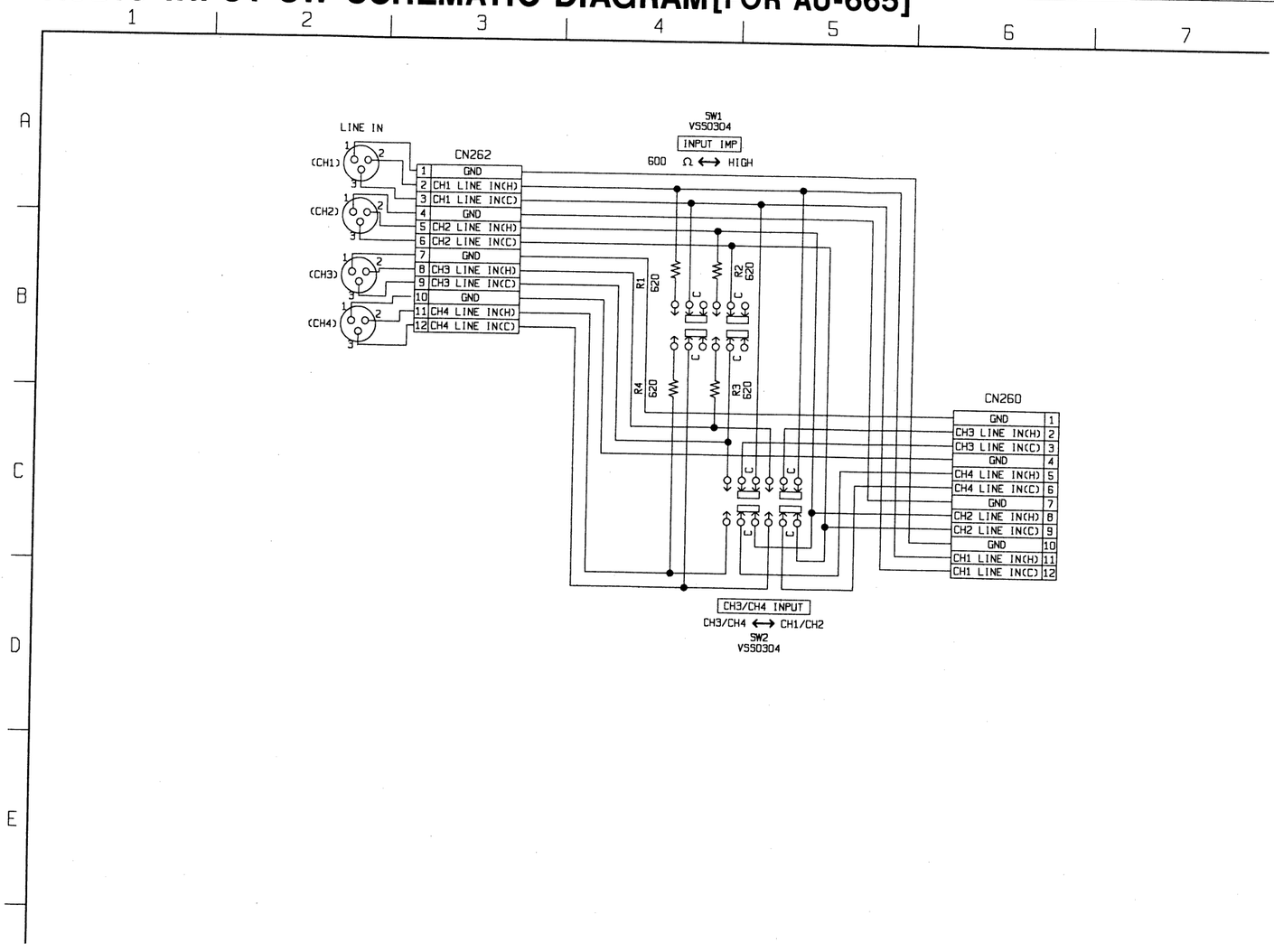

AUDIO VR SCHEMATIC DIAGRAM[FOR AU-66

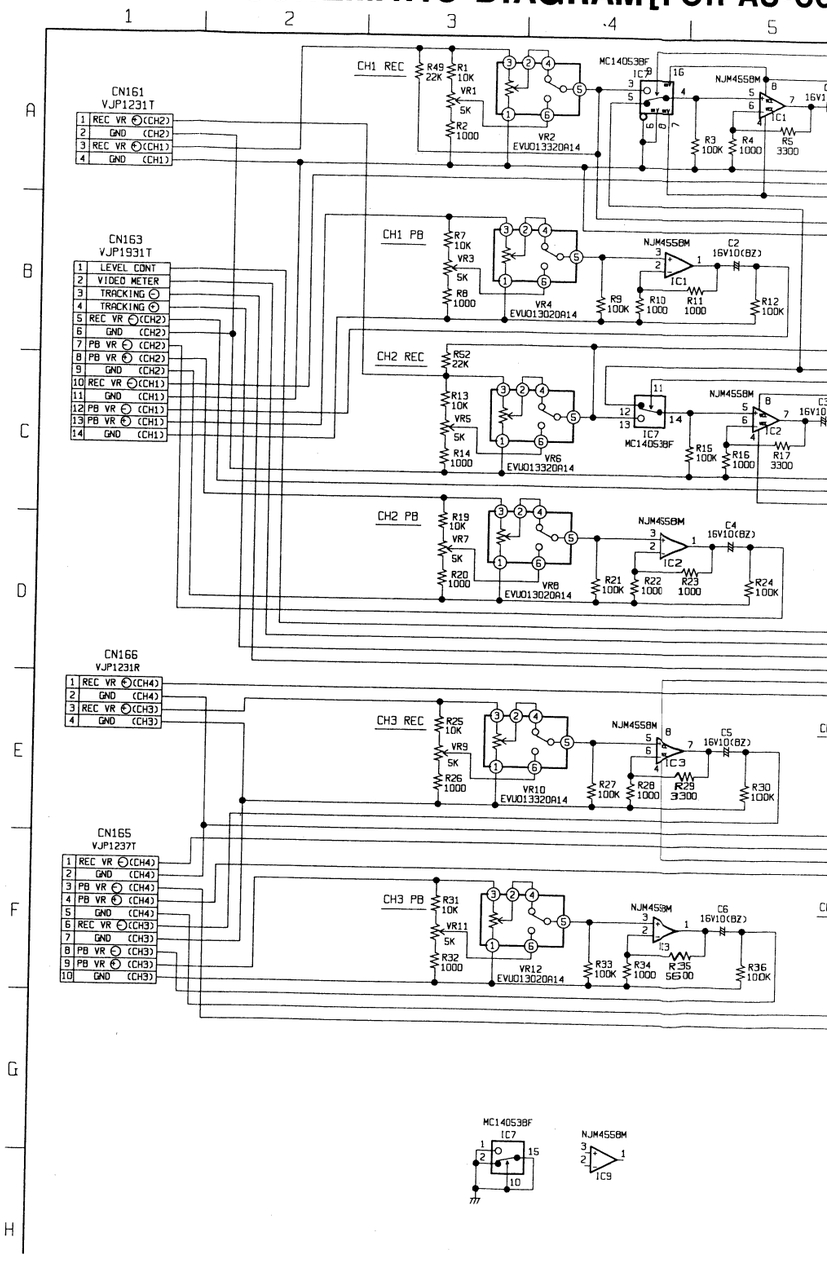

MODEL / TYPE	AU-665	AU-65	AU-63	AU-62
NTSC	VEP84102A	See Next Page		
PAL	VEP84102A			

O VR SCHEMATIC DIAGRAM[FOR AU-665]

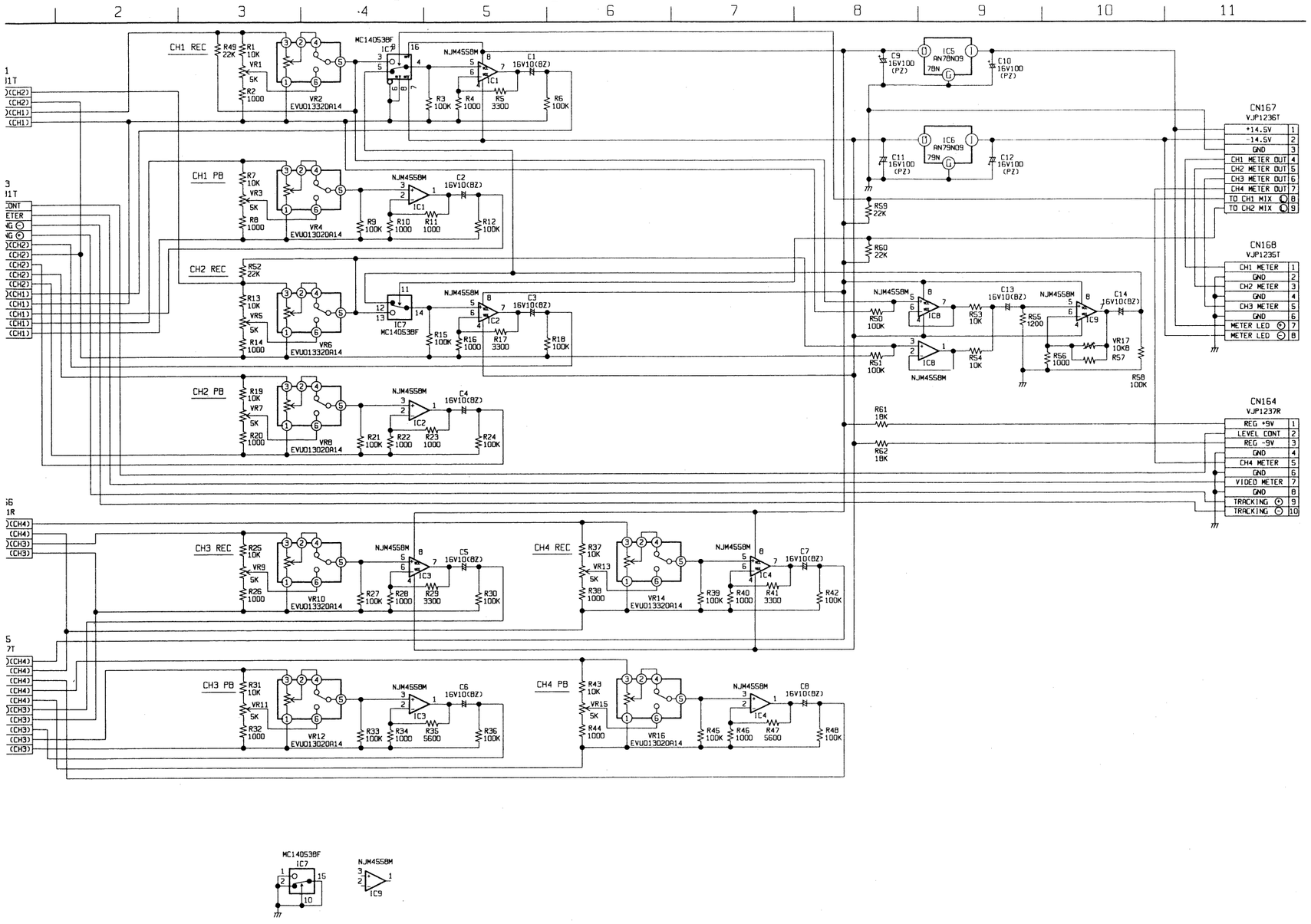

AUDIO VR SCHEMATIC DIAGRAM

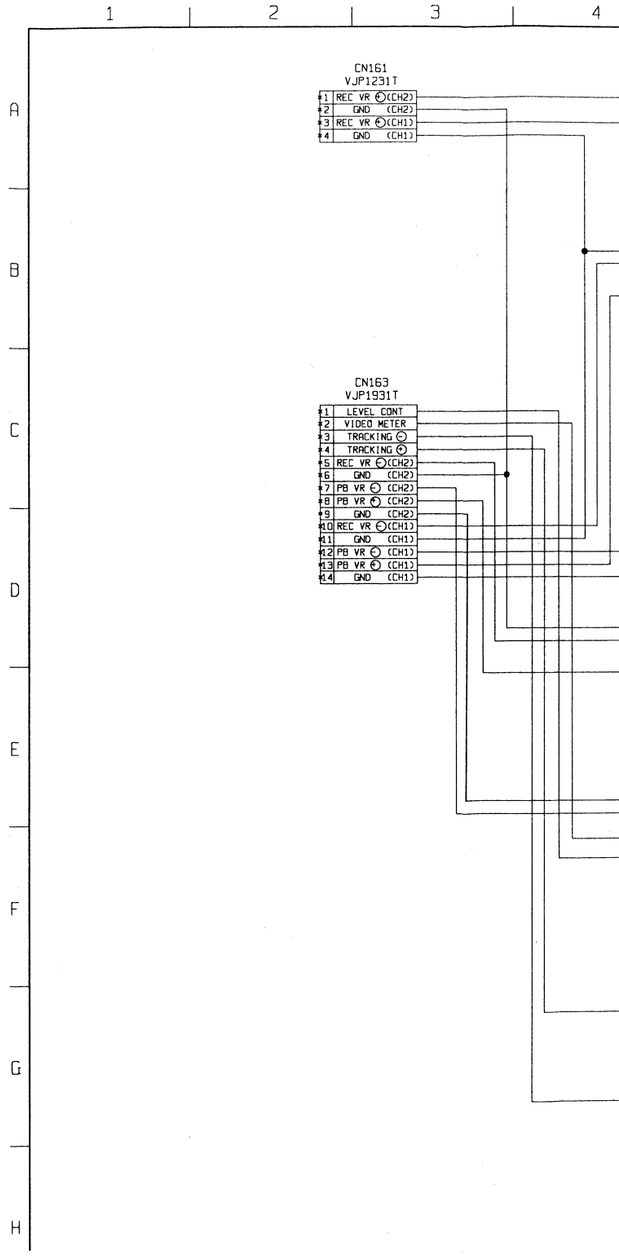

MODEL / TYPE	AU-665	AU-65	AU-63	AU-62
NTSC	See Front Page	VEP84101A	VEP84101C	VEP84101B
PAL	See Front Page	VEP84101A	VEP84101C	VEP84101B

AUDIO VR SCHEMATIC DIAGRAM[FOR AU-65,AU-63,AU-62]

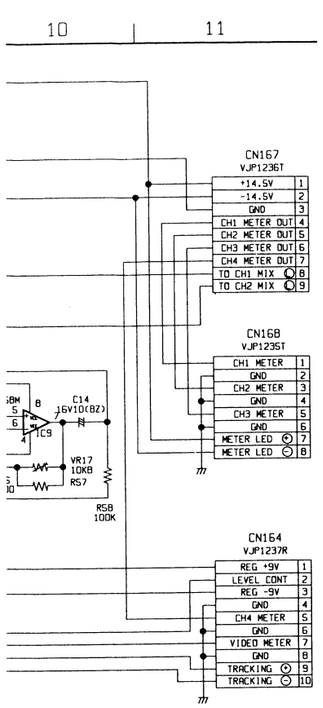

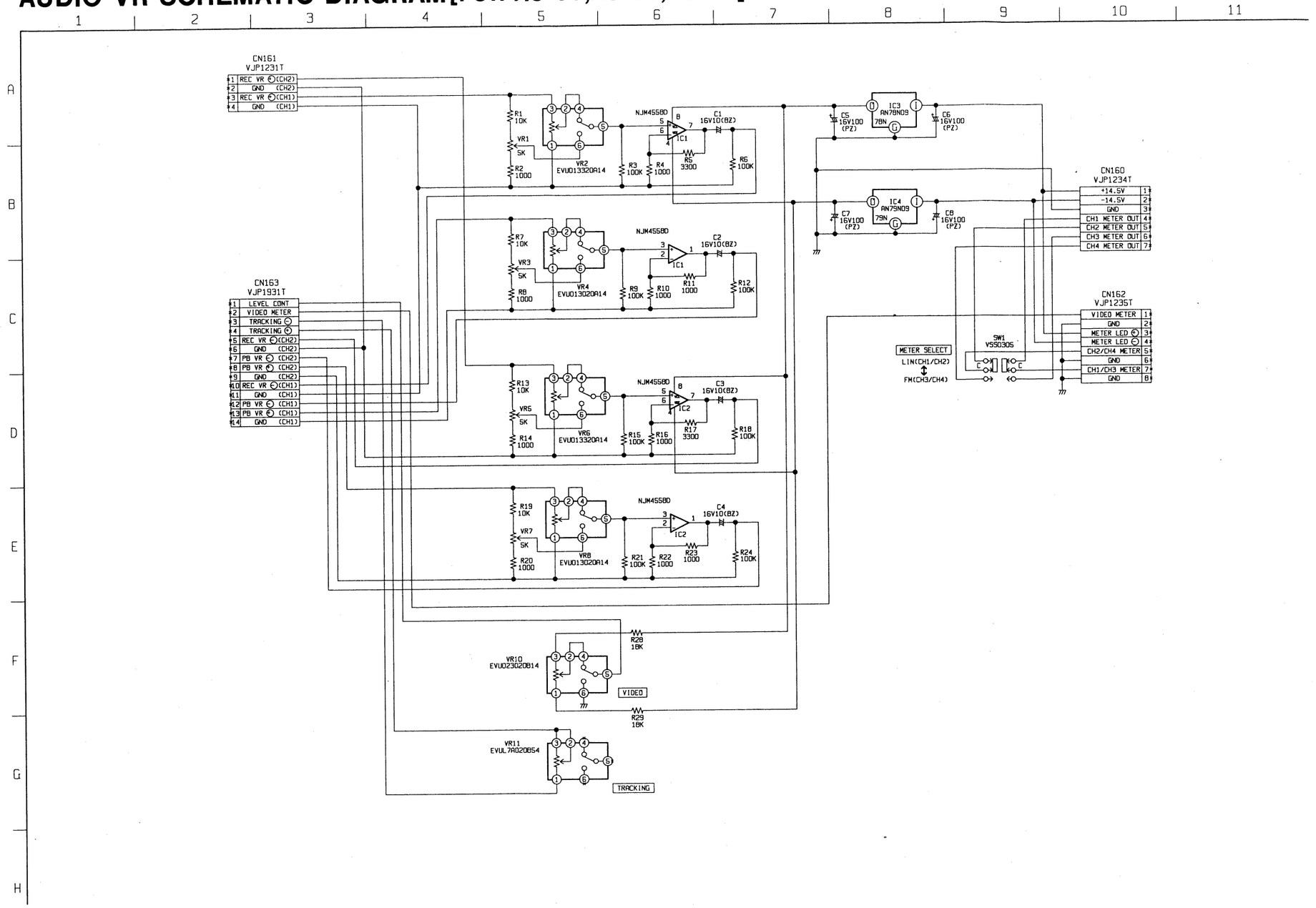

TYPE \ MODEL	AU-665	AU-65	AU-63	AU-62
NTSC	VEP80612A	See Next Page		
PAL	——			

FRONT INTERFACE SCHEMATIC DIAGRAM [FOR AU-665]

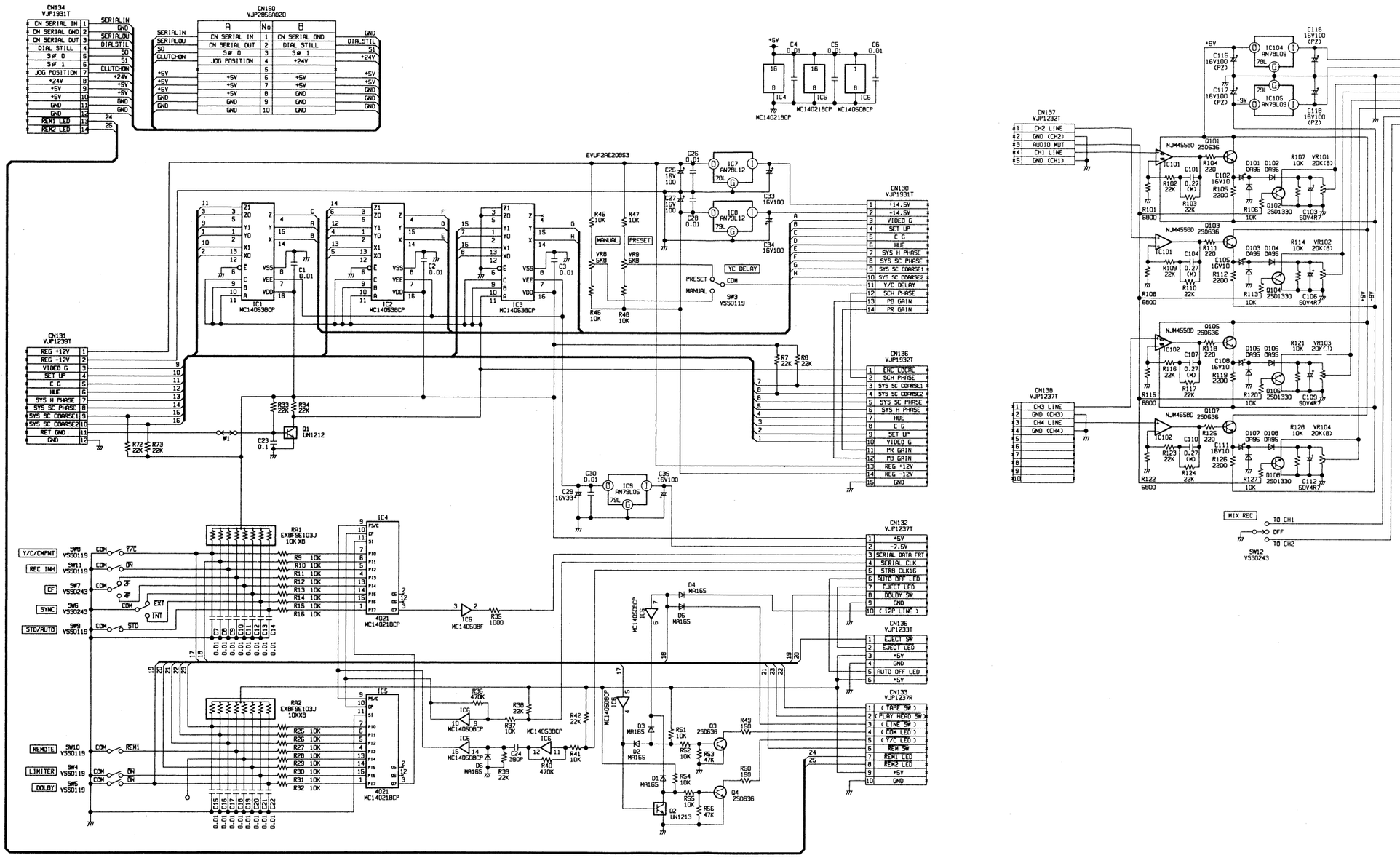

TYPE \ MODEL	AU-665	AU-65	AU-63	AU-62
NTSC	See Front Page	VEP80553A	VEP80553C	VEP80553B
PAL	———	VEP80631A	VEP80631B	VEP80631C

FRONT INTERFACE SCHEMATIC DIAGRAM[FOR AU-65,AU-63,AU-62]

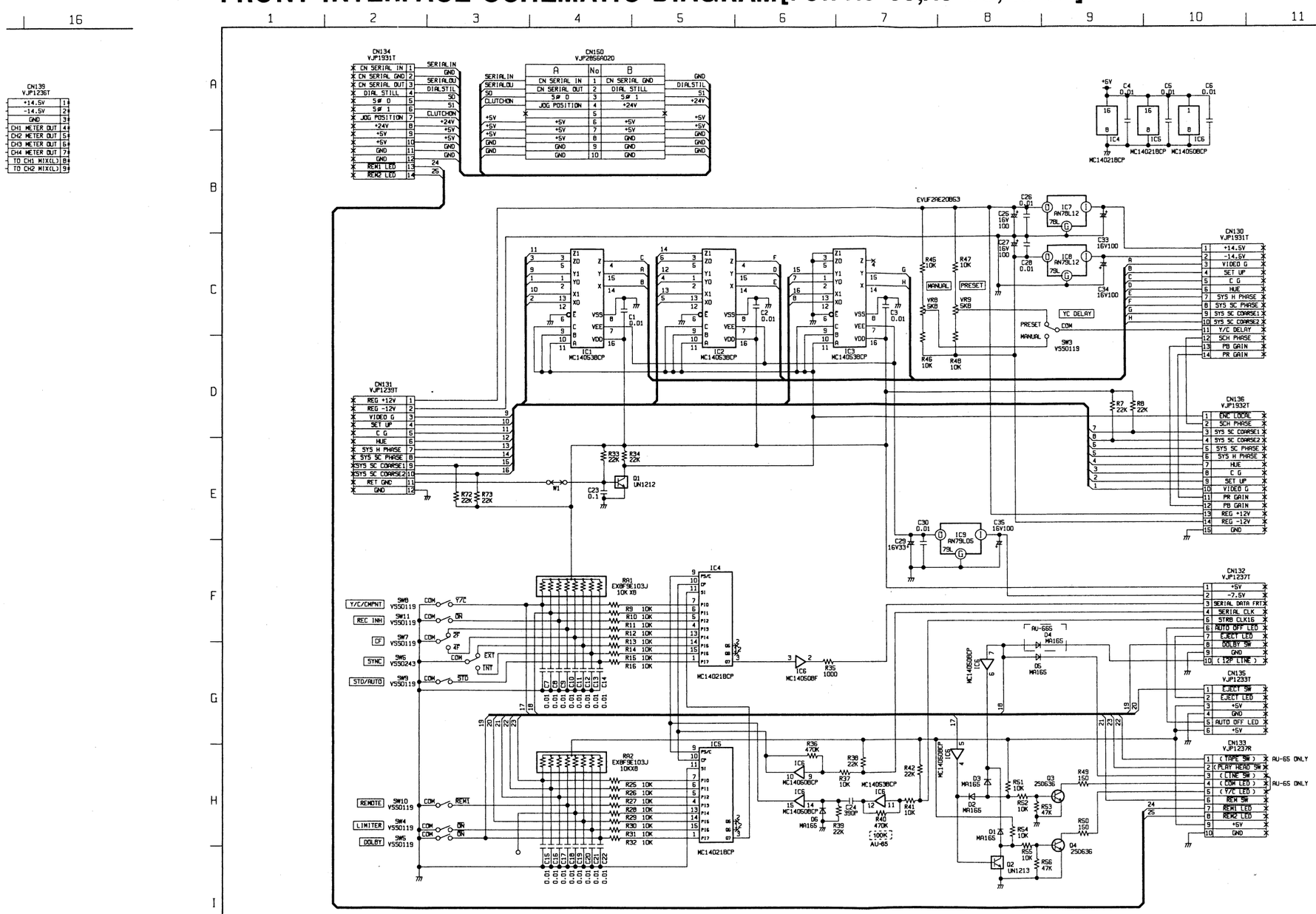

	AU-65	AU-63	AU-62
C12	0.01	0	0
C15	0.01	0	0.01
C16	0.01	0	0
D5	MA165	MA165	———

TYPE \ MODEL	AU-665	AU-65	AU-63	AU-62
NTSC	VEP80559B	VEP80559A	VEP80559D	VEP80559C
PAL	VEP80559B	VEP80559A	VEP80559D	VEP80559C

FRONT MODE SELECT SCHEMATIC DIAGRAM

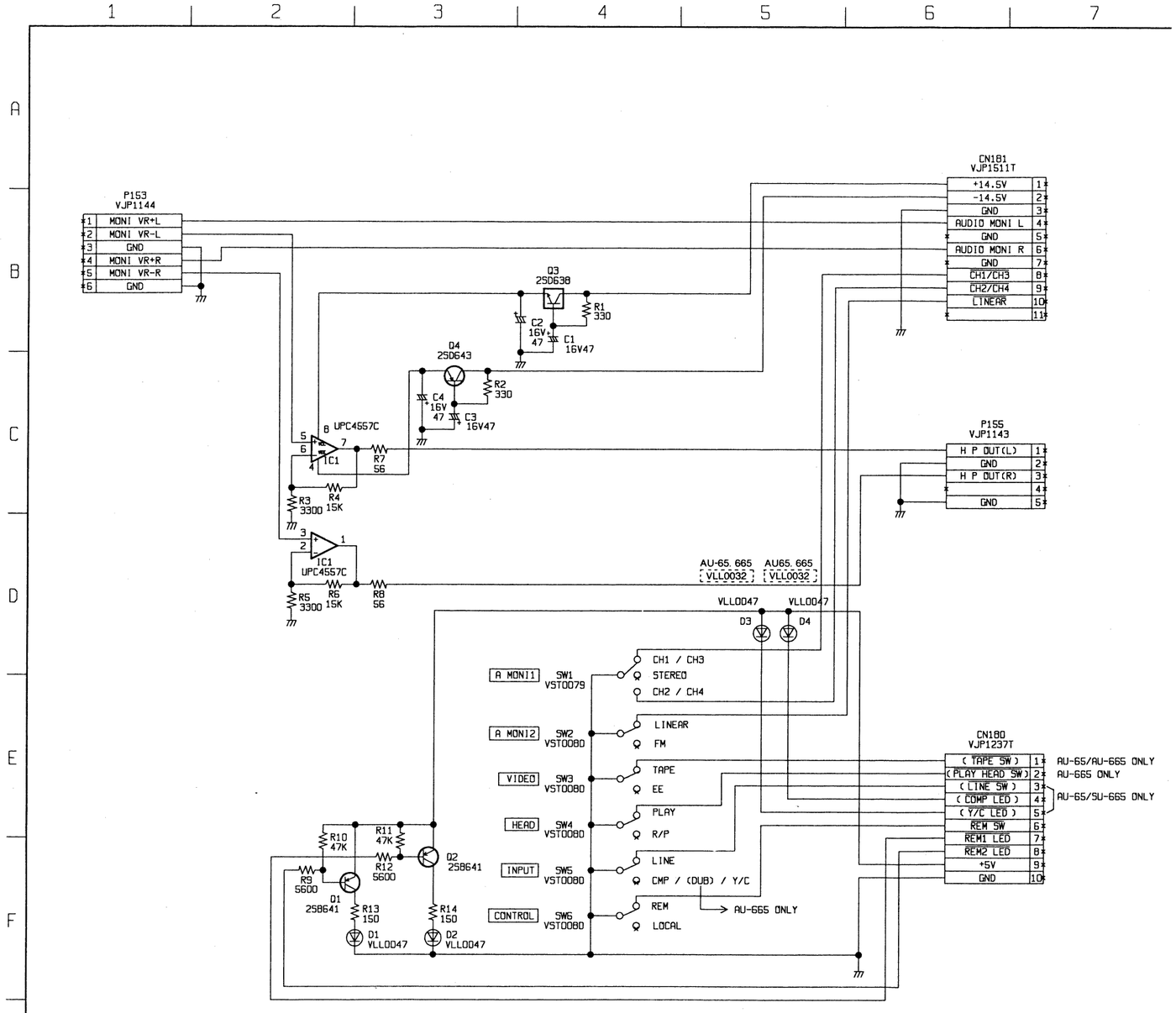

	AU-65	AU-63	AU-665	AU-635
SW3	○	×	○	×
SW4	×	×	○	×
D3	○	×	○	×
D4	○	×	○	×

FRONT PANEL A SCHEMATIC D

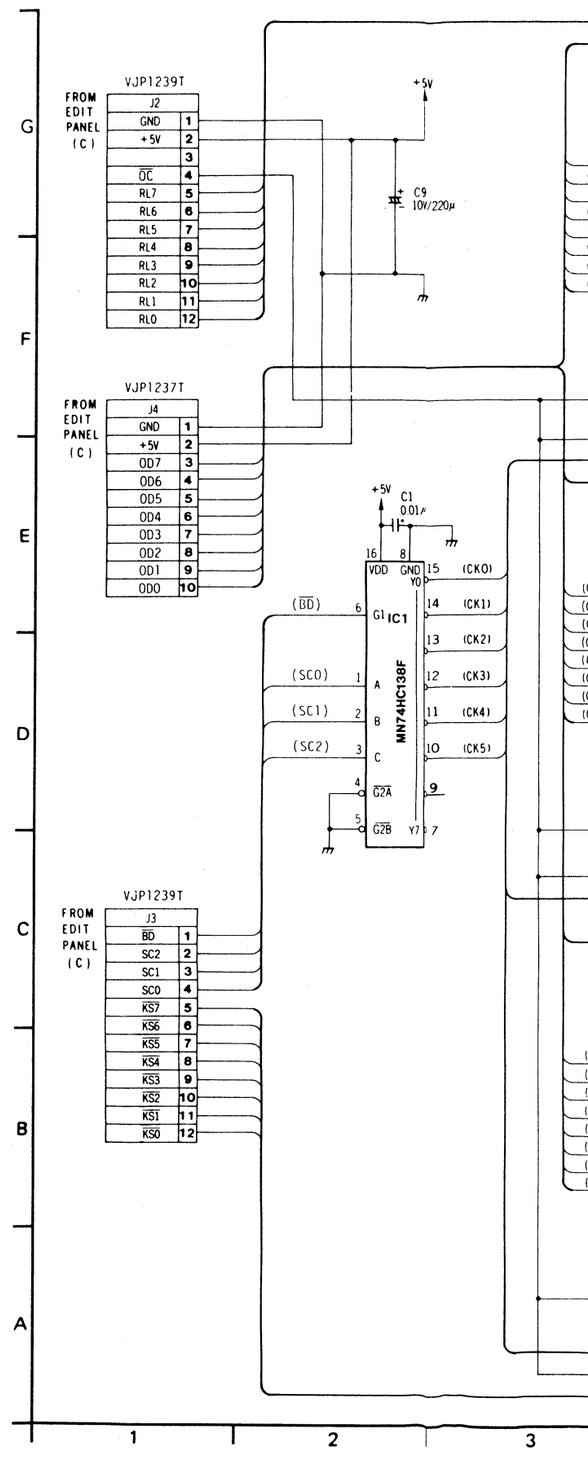

REVERSE SIDE **FRONT INTERFACE SCHEMATIC DIAGRAM**

TYPE \ MODEL	AU-665／PE	AU-665	AU-65	AU-63	AU-62
NTSC	VEP66052C	See Next Page			
PAL	——				

HEMATIC DIAGRAM [FOR AU-665 NTSC]

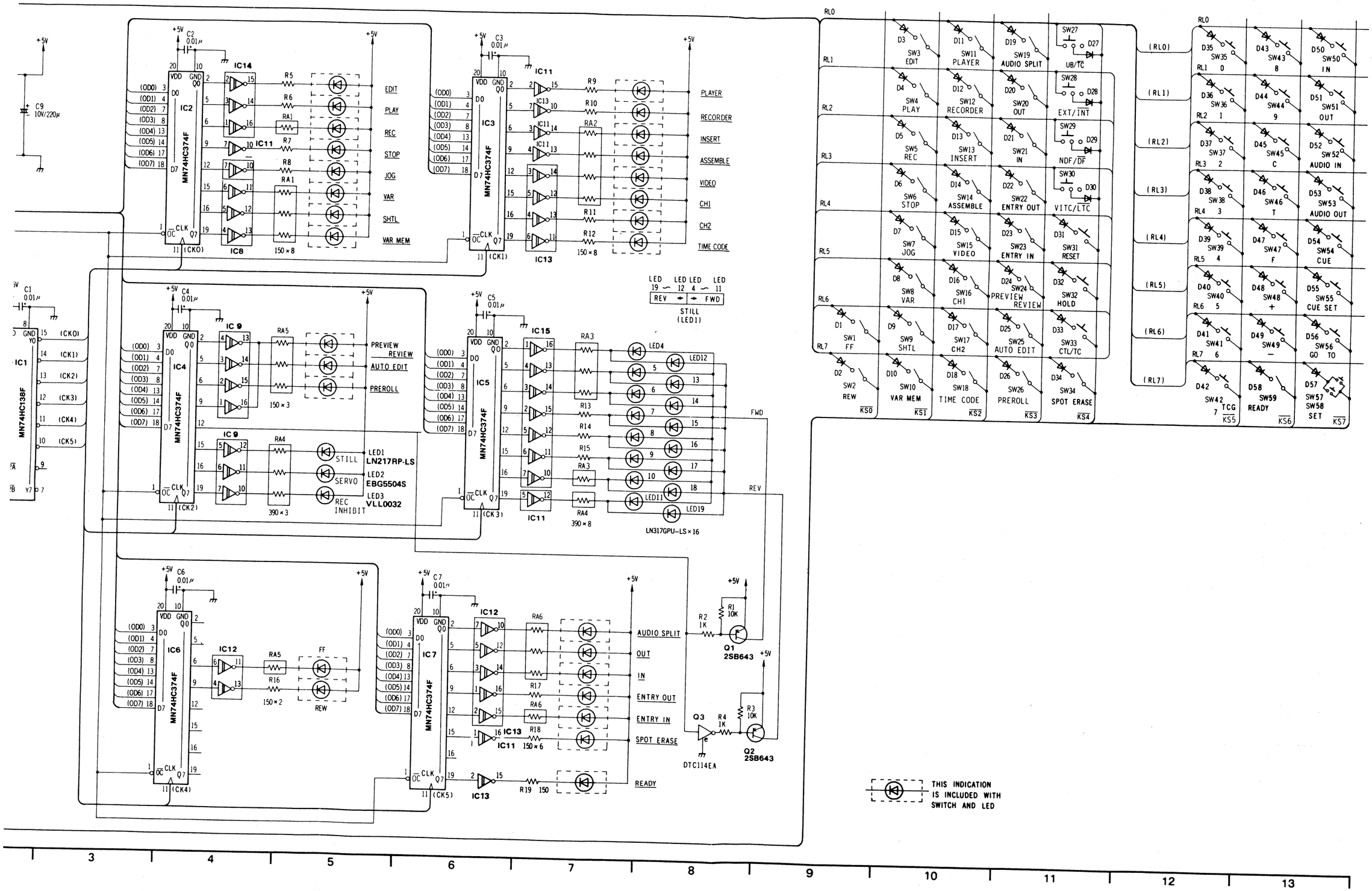

TYPE \ MODEL	AU-665／PE	AU-665	AU-65	AU-63	AU-62
NTSC	See Front Page	VEP86050C	VEP86050C	See Next Page	
PAL	———	———	VEP86050D		

FRONT PANEL A SCHEMATIC DIAGRAM[FOR AU-65]

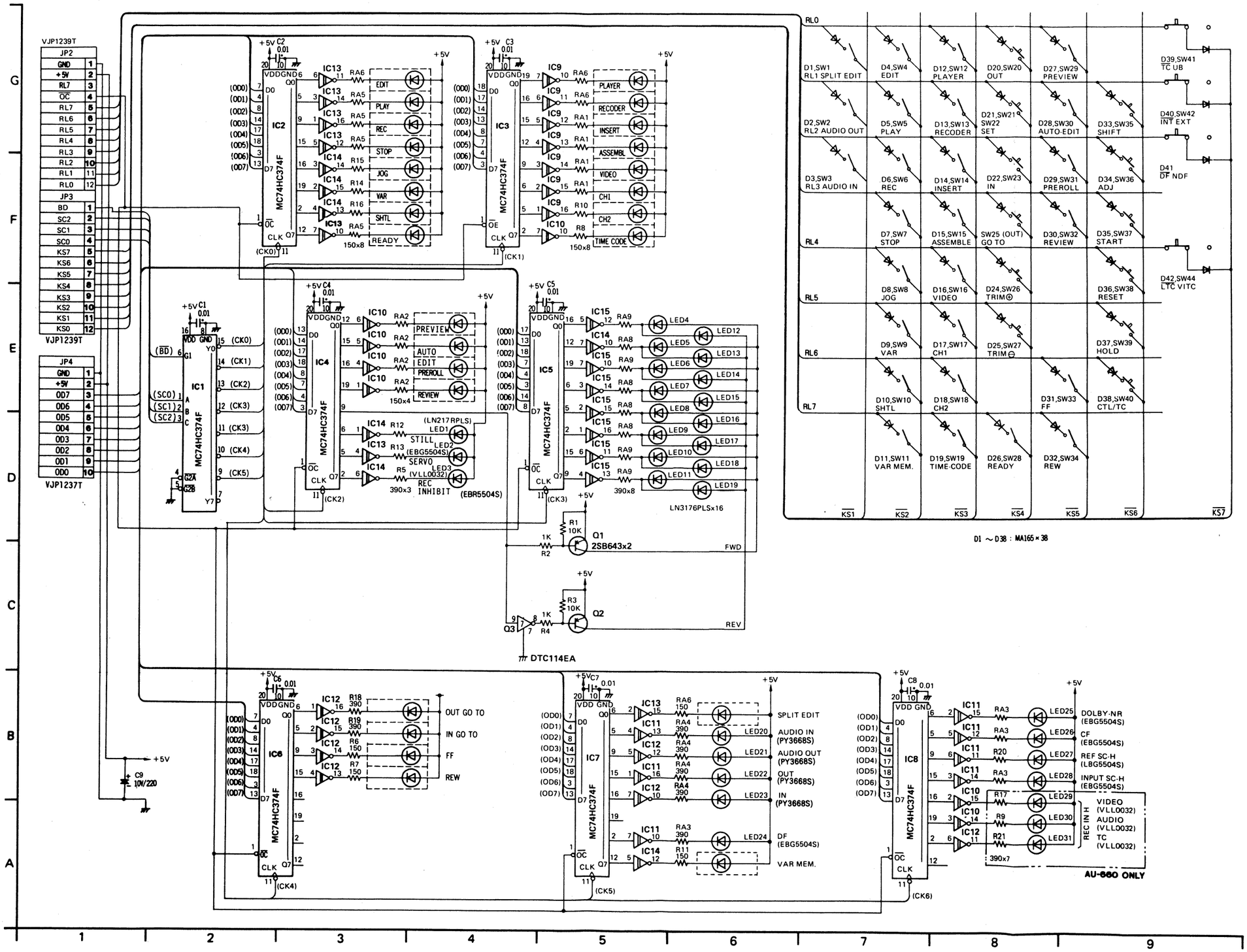

TYPE \ MODEL	AU-665	AU-65	AU-63	AU-62
NTSC	See Page5-2-38	See Front Page	VEP86086A	VEP86086A
PAL	———	See Front Page	VEP86086A	VEP86086A

FRONT PANEL A SCHEMATIC DIAGRAM[FOR AU-62,AU-63]

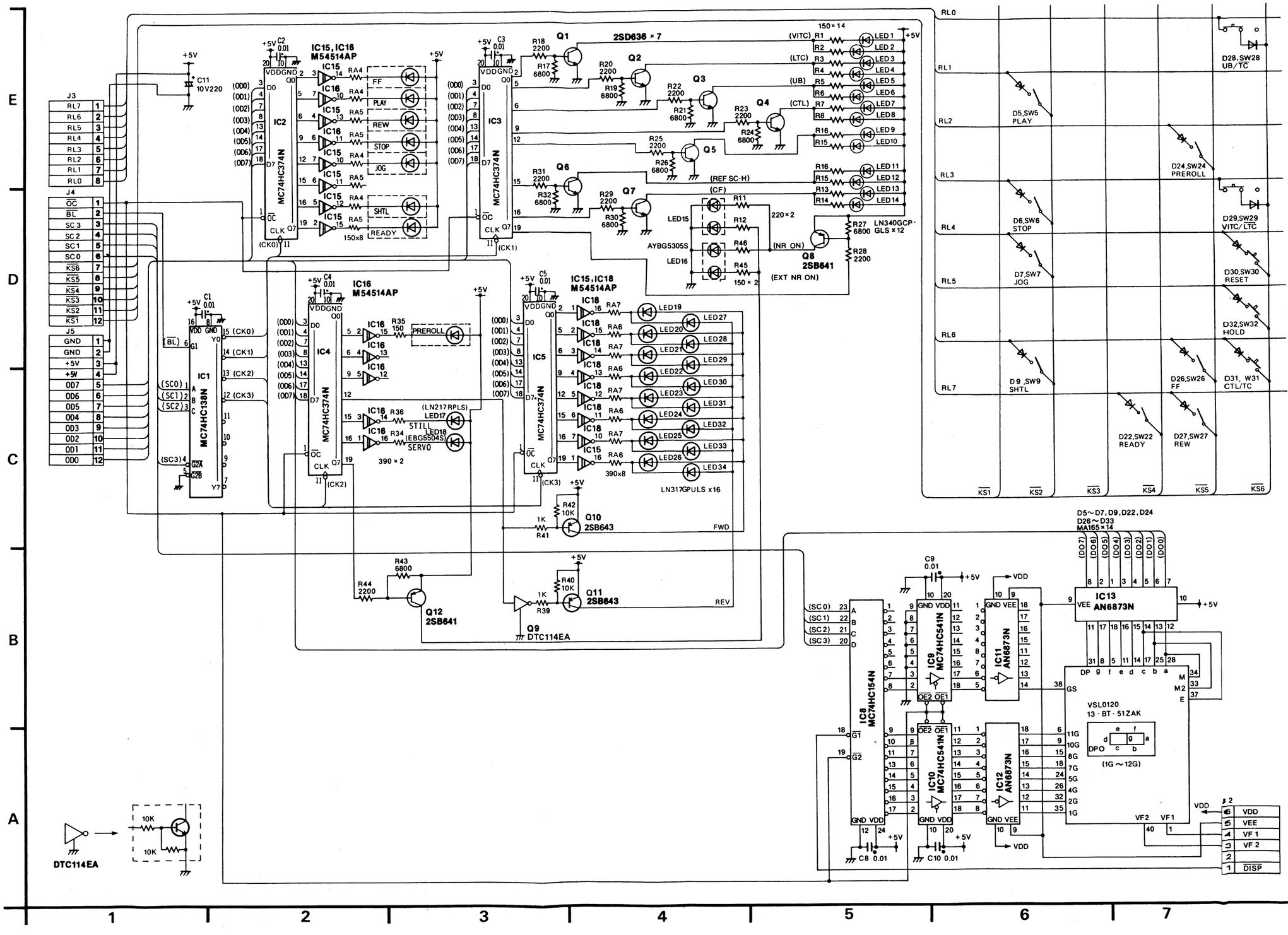

TYPE \ MODEL	AU-665	AU-65	AU-63	AU-62
NTSC	VEP66022A	VEP66022A	VEP86076C	VEP86076C
PAL	VEP66022A	VEP66022A	VEP86076D	VEP86076D

FRONT PANEL B SCHEMATIC DIAGRAM[FOR AU-665,AU-65]

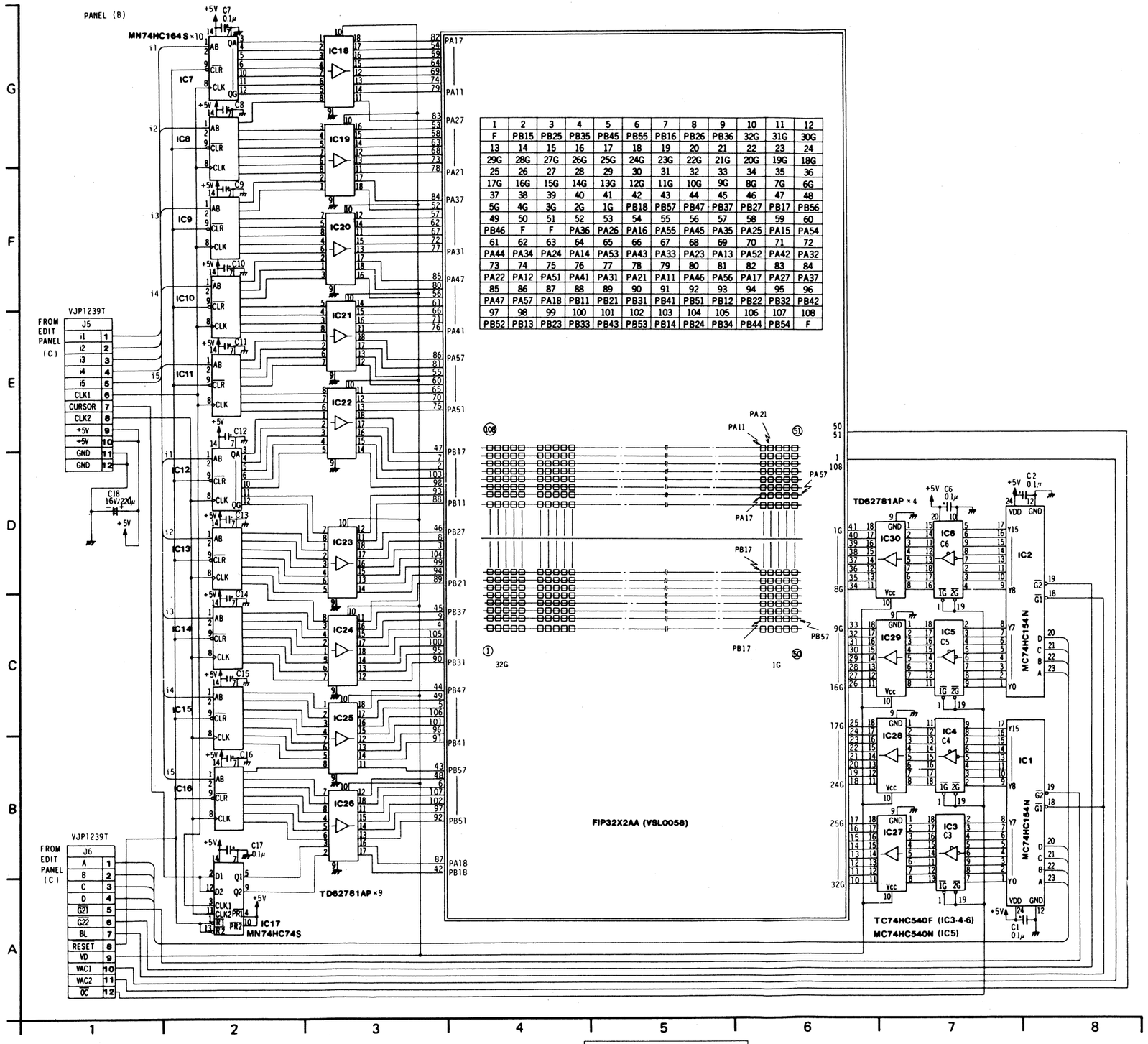

1	2	3	4	5	6	7	8	9	10	11	12
F	PB15	PB25	PB35	PB45	PB55	PB16	PB26	PB36	32G	31G	30G
13	14	15	16	17	18	19	20	21	22	23	24
29G	28G	27G	26G	25G	24G	23G	22G	21G	20G	19G	18G
25	26	27	28	29	30	31	32	33	34	35	36
17G	16G	15G	14G	13G	12G	11G	10G	9G	8G	7G	6G
37	38	39	40	41	42	43	44	45	46	47	48
5G	4G	3G	2G	1G	PB18	PB57	PB47	PB37	PB27	PB17	PB56
49	50	51	52	53	54	55	56	57	58	59	60
PB46	F	F	PA36	PA26	PA16	PA55	PA45	PA35	PA25	PA15	PA54
61	62	63	64	65	66	67	68	69	70	71	72
PA44	PA34	PA24	PA14	PA53	PA43	PA33	PA23	PA13	PA52	PA42	PA32
73	74	75	76	77	78	79	80	81	82	83	84
PA22	PA12	PA51	PA41	PA31	PA21	PA11	PA46	PA56	PA17	PA27	PA37
85	86	87	88	89	90	91	92	93	94	95	96
PA47	PA57	PA18	PB11	PB21	PB31	PB41	PB51	PB12	PB22	PB32	PB42
97	98	99	100	101	102	103	104	105	106	107	108
PB52	PB13	PB23	PB33	PB43	PB53	PB14	PB24	PB34	PB44	PB54	F

FRONT PANEL C SCHEMAT

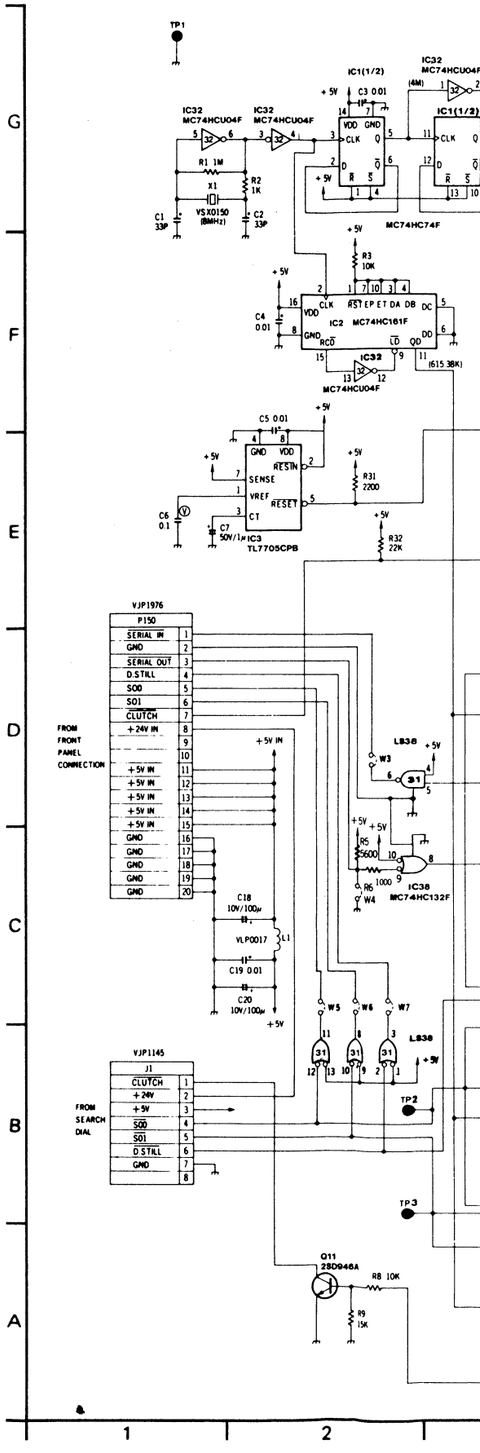

TYPE \ MODEL	AU-665	AU-65	AU-63	AU-62
NTSC	VEP66053E	See Next Page	Not Used	Not Used
PAL	———	See Next Page	Not Used	Not Used

C SCHEMATIC DIAGRAM [FOR AU-665]

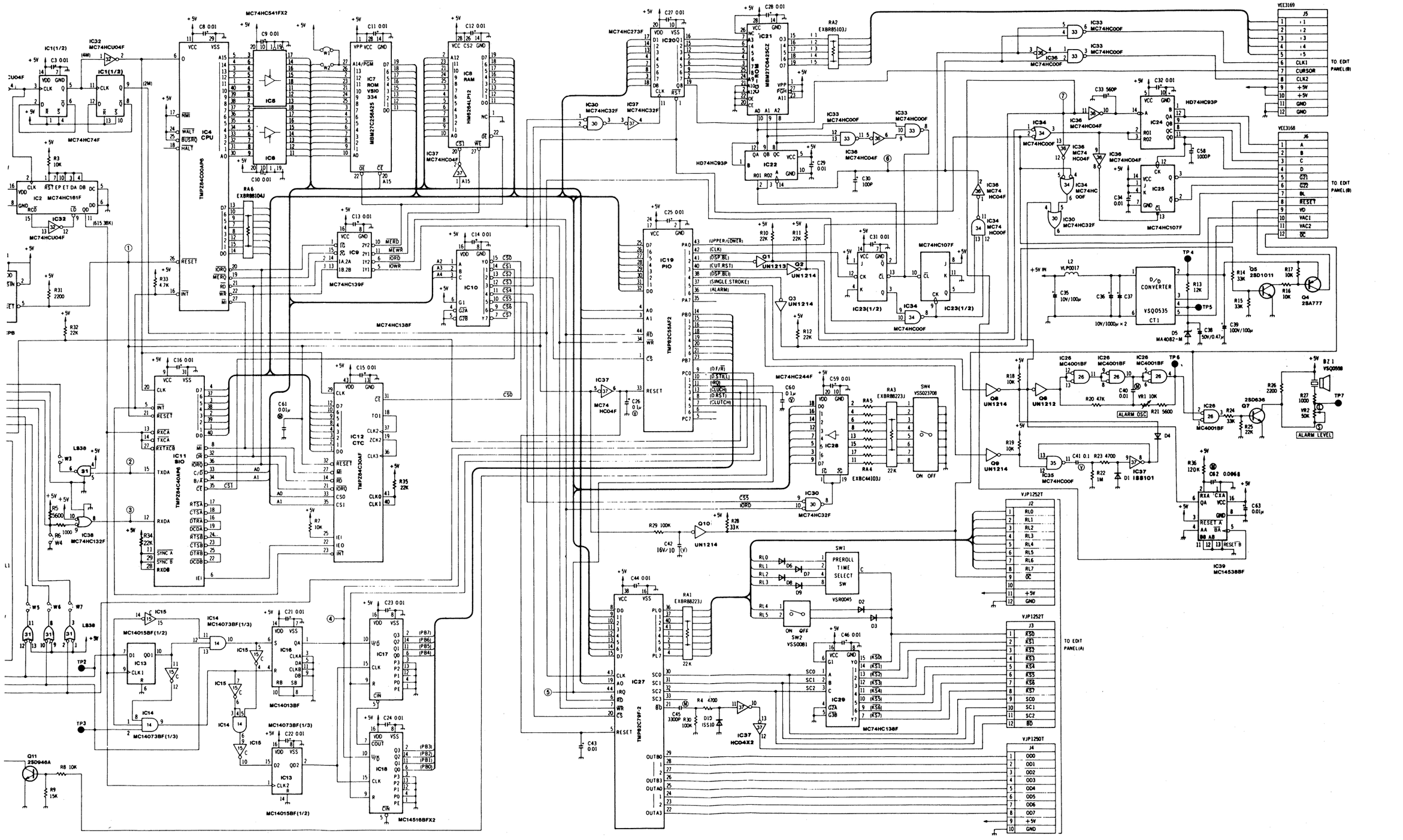

TYPE \ MODEL	AU-665	AU-65	AU-63	AU-62
NTSC	See Front Page	VEP86048F	Not Used	Not Used
PAL	———	VEP86048G	Not Used	Not Used

FRONT PANEL C SCHEMATIC DIAGRAM[FOR AU-65]

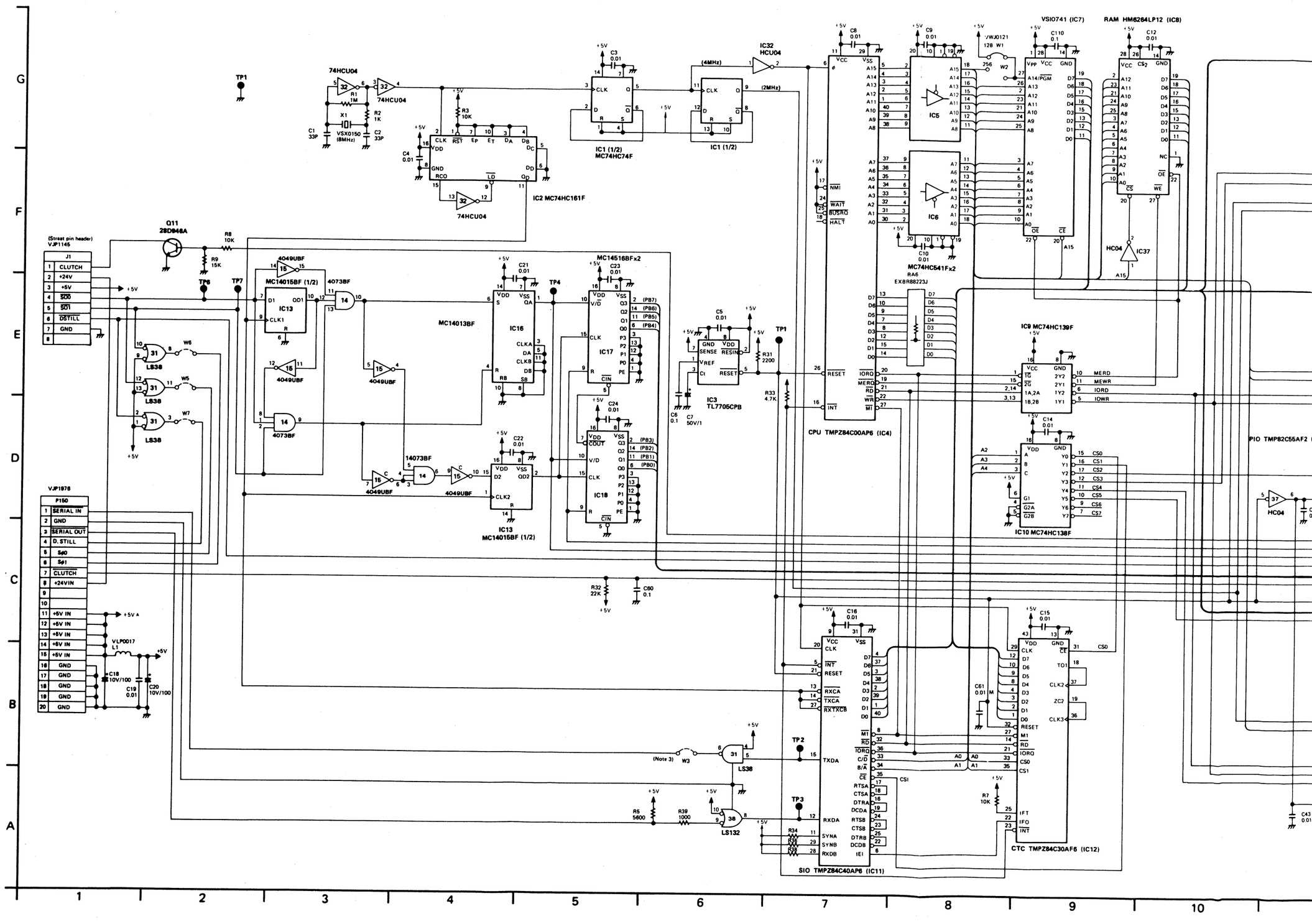

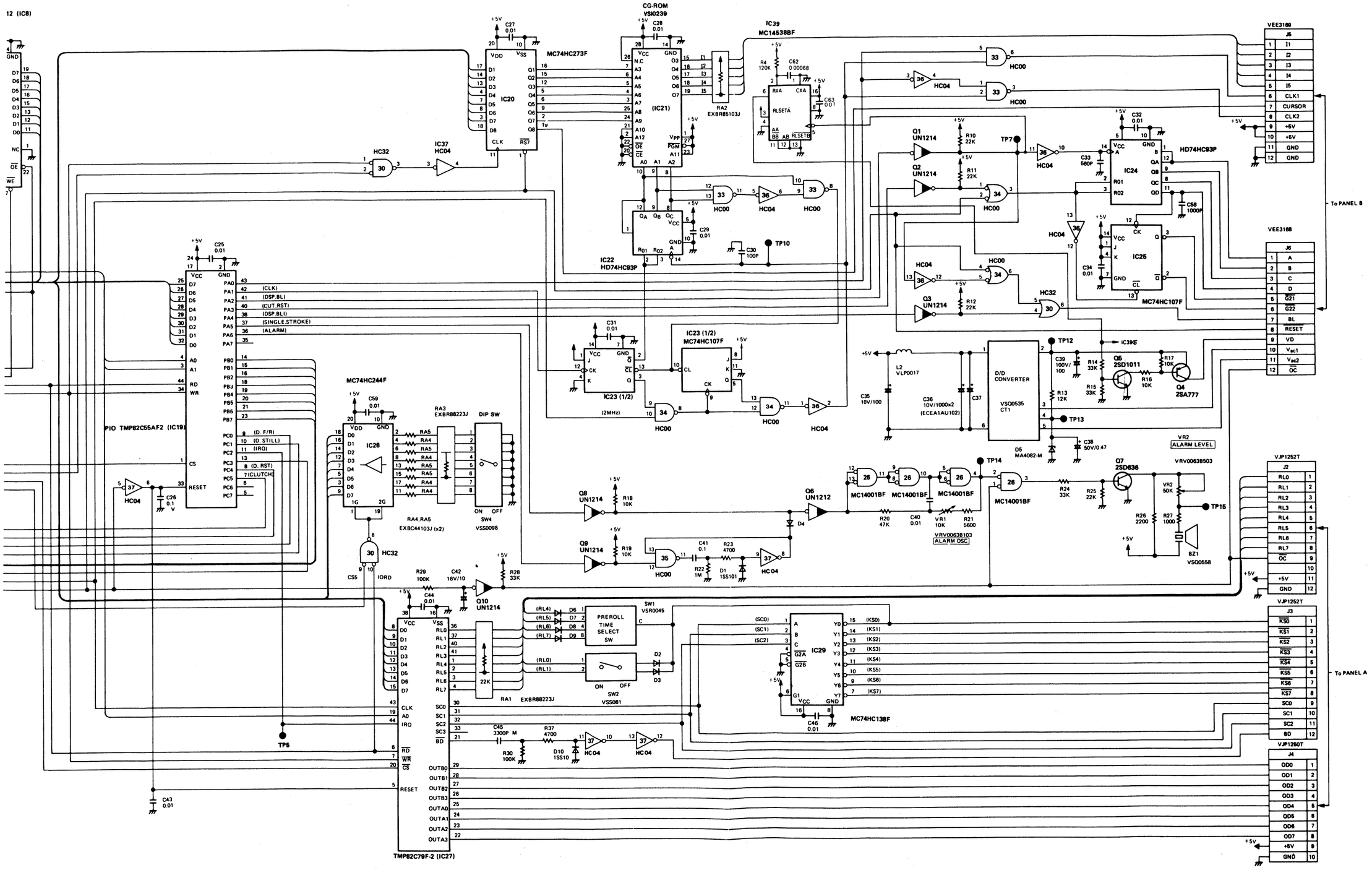

12 (IC8)
CG-ROM
VSI0239
MC74HC273F
IC20
(IC21)
IC39
MC14538BF
RA2
EXBR85103J
HC32
IC37
HC04
HC00
IC22
HD74HC93P
TP10
IC24
HD74HC93P
IC25
MC74HC107F
VEE3169
VEE3168
To PANEL B
PIO TMP82C55AF2 (IC19)
MC74HC244F
IC28
RA3
EXBR88223J
DIP SW
SW4
VSS0098
RA4,RA5
EXBC44103J (x2)
IC23 (1/2)
MC74HC107F
IC23 (1/2)
(2MHz)
Q1
UN1214
Q2
UN1214
Q3
UN1214
Q8
UN1214
Q9
UN1214
Q6
UN1212
Q10
UN1214
D/D
CONVERTER
VSQ0535
CT1
L2
VLP0017
C36
10V/1000x2
(ECEA1AU102)
Q5
2SD1011
Q4
2SA777
TP12
TP13
TP14
TP15
D5
MA4082-M
VR2
ALARM LEVEL
VRV0063B503
Q7
2SD636
MC14001BF
VRV0063B103
ALARM OSC
BZ1
VSQ0558
VJP1252T
VJP1252T
VJP1250T
To PANEL A
PREROLL
TIME
SELECT
SW
SW1
VSR0045
SW2
VSS081
RA1
EXBR88223J
IC29
MC74HC138F
TMP82C79F-2 (IC27)
TP5
10
11
12
13
14
15
16
17
18
19
20

TYPE \ MODEL	AU-665	AU-65	AU-63	AU-62
NTSC	VEP66053E	VEP86048F	Not Used	Not Used
PAL	VEP86048H	VEP86048G	Not Used	Not Used

FRONT PANEL C SCHEMATIC DIAGRAM [FOR AU-63,AU-62]

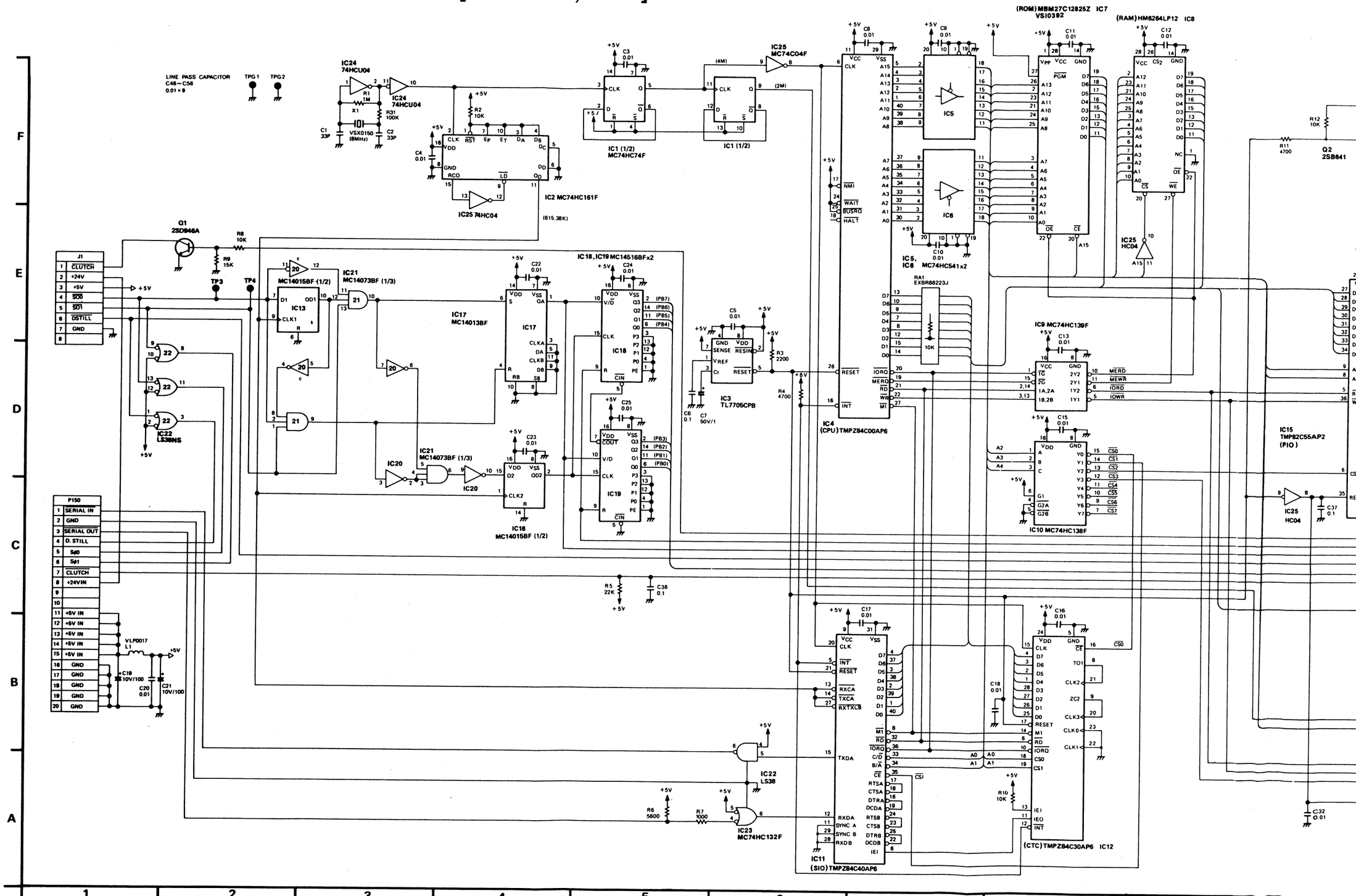

REVERSE SIDE FRONT PANEL C SCHEMATIC DIAGRAM

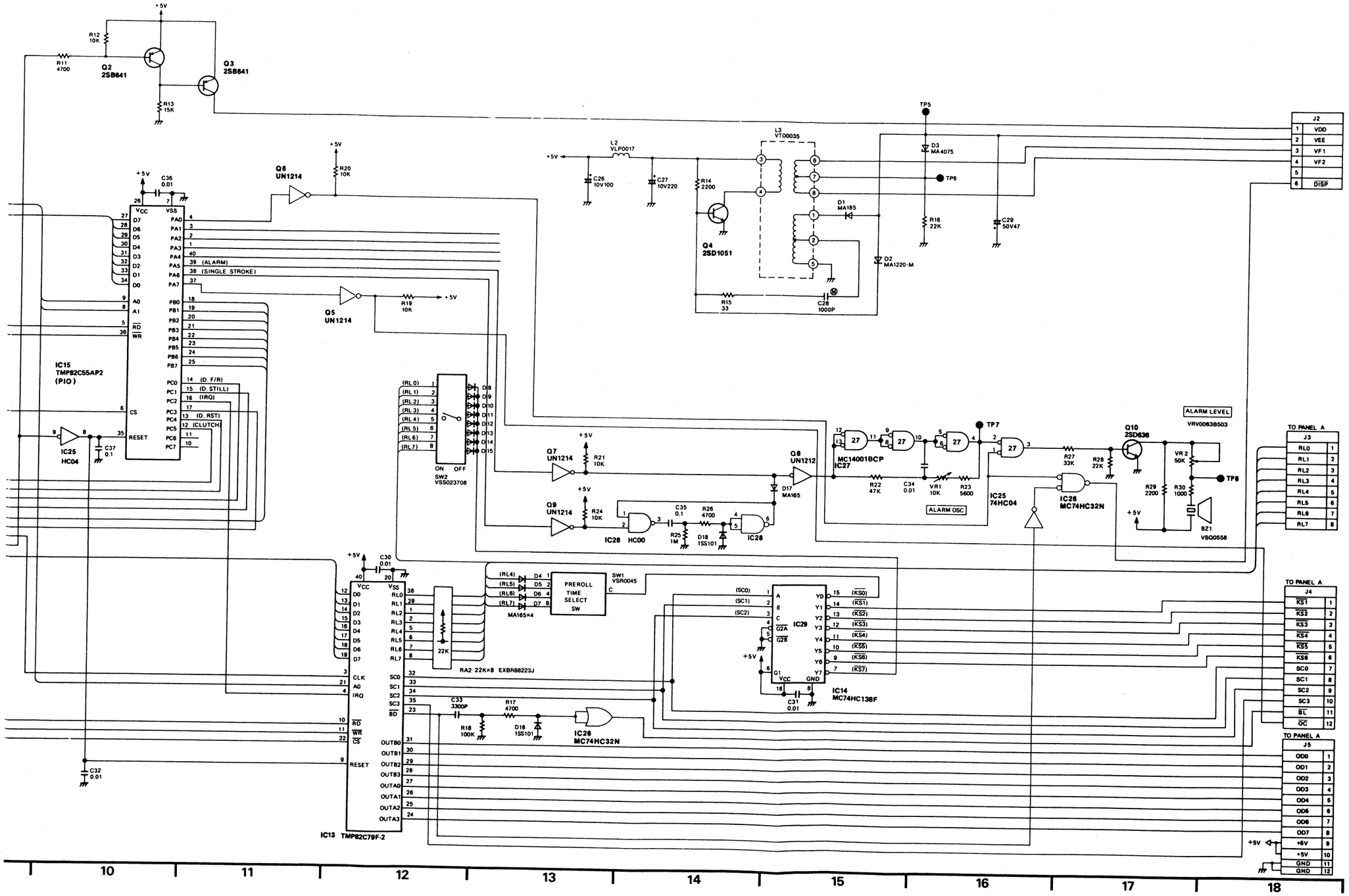
+5V
R12 10K
R11 4700
Q2 2SB641
Q3 2SB641
R13 15K
Q6 UN1214
R20 10K
C36 0.01
IC15 TMP82C55AP2 (PIO)
VCC
VSS
D7
D6
D5
D4
D3
D2
D1
D0
A0
A1
RD
WR
CS
RESET
PA0
PA1
PA2
PA3
PA4
PA5 (ALARM)
PA6 (SINGLE STROKE)
PA7
PB0
PB1
PB2
PB3
PB4
PB5
PB6
PB7
PC0 (D. F/R)
PC1 (D. STILL)
PC2 (IRQ)
PC3
PC4 (D. RST)
PC5 (CLUTCH)
PC6
PC7
IC25 HC04
C37 0.1
Q5 UN1214
R19 10K
L2 VLP0017
C26 10V100
C27 10V220
L3 VT00035
R14 2200
Q4 2SD1051
D1 MA185
D2 MA1220-M
R15 33
C28 1000P
D3 MA4075
TP5
TP6
R16 22K
C29 50V47
J2
VDD
VEE
VF1
VF2
DISP
(RL0)
(RL1)
(RL2)
(RL3)
(RL4)
(RL5)
(RL6)
(RL7)
D8
D9
D10
D11
D12
D13
D14
D15
ON
OFF
SW2 VSS023708
Q7 UN1214
R21 10K
Q8 UN1212
D17 MA165
Q9 UN1214
R24 10K
C35 0.1
R26 4700
R25 1M
D18 1SS101
IC28 HC00
IC28
IC27 MC14001BCP
R22 47K
C34 0.01
VR1 10K
R23 5600
IC25 74HC04
R27 33K
R28 22K
IC26 MC74HC32N
Q10 2SD636
ALARM LEVEL
VRV0063B503
VR2 50K
TP8
R29 2200
R30 1000
BZ1 VSQ0558
ALARM OSC
TO PANEL A
J3
RL0
RL1
RL2
RL3
RL4
RL5
RL6
RL7
C30 0.01
IC13 TMP82C79F-2
CLK
IRQ
BD
SC0
SC1
SC2
SC3
OUTB0
OUTB1
OUTB2
OUTB3
OUTA0
OUTA1
OUTA2
OUTA3
C32 0.01
(RL4)
(RL5)
(RL6)
(RL7)
MA165×4
PREROLL TIME SELECT SW
SW1 VSR0045
22K
RA2 22K×8 EXBR88223J
(SC0)
(SC1)
(SC2)
IC29
G2A
G2B
G1
IC14 MC74HC138F
C31 0.01
C33 3300P
R18 100K
R17 4700
D16 1SS101
IC26 MC74HC32N
TO PANEL A
J4
KS1
KS2
KS3
KS4
KS5
KS6
SC0
SC1
SC2
SC3
BL
OC
TO PANEL A
J5
OD0
OD1
OD2
OD3
OD4
OD5
OD6
OD7
+5V
+5V
GND
GND
10
11
12
13
14
15
16
17
18

FRONT SW & VR SCHEMATIC DIAGRAM[FOR AU-665]

TYPE \ MODEL	AU-665	AU-65	AU-63	AU-62
NTSC	VEP80613A	See Next Page		
PAL	VEP80613B			

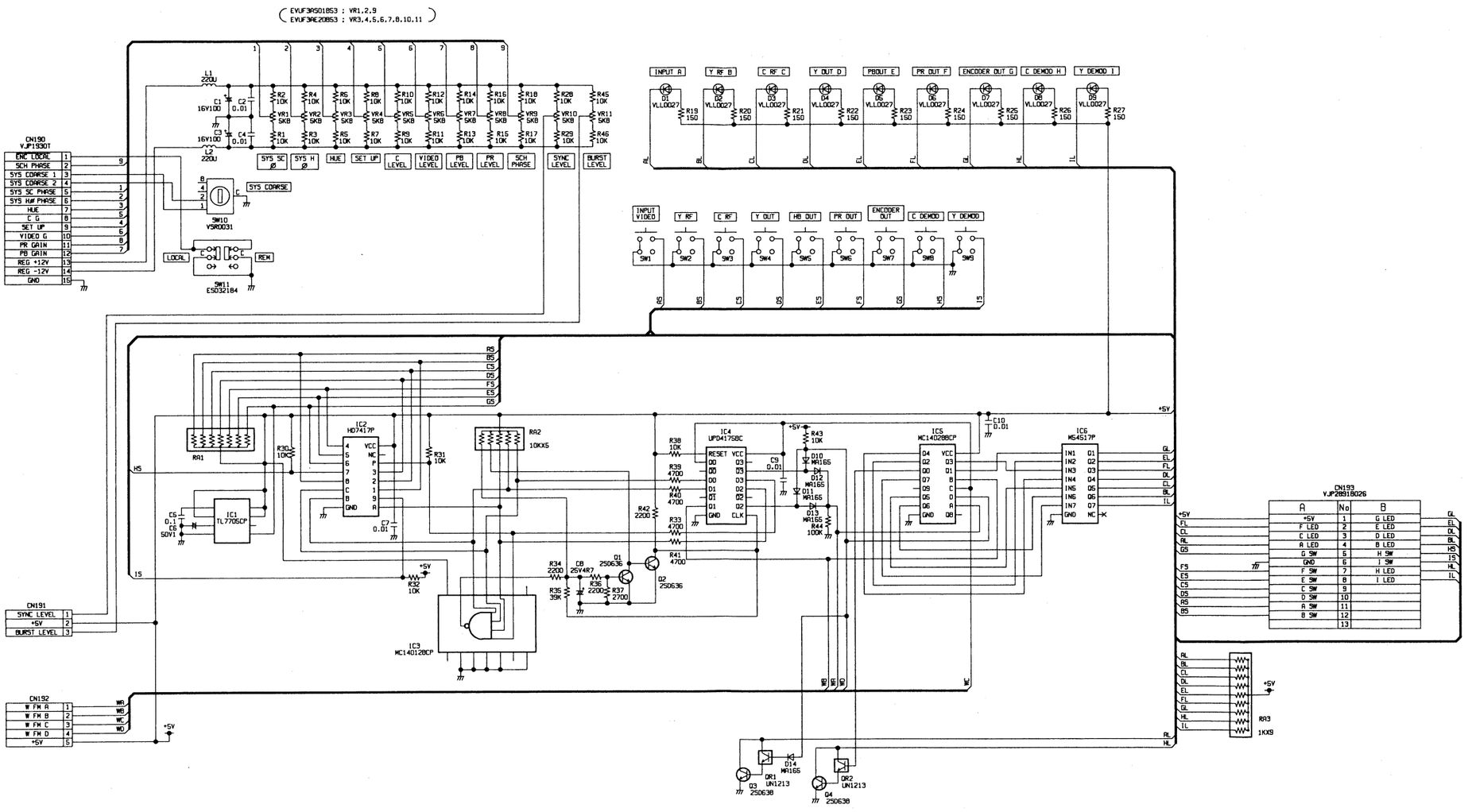

TYPE \ MODEL	AU-665	AU-65	AU-63	AU-62
NTSC	VEP80613A	See Next Page		
PAL	VEP80613B			

665]

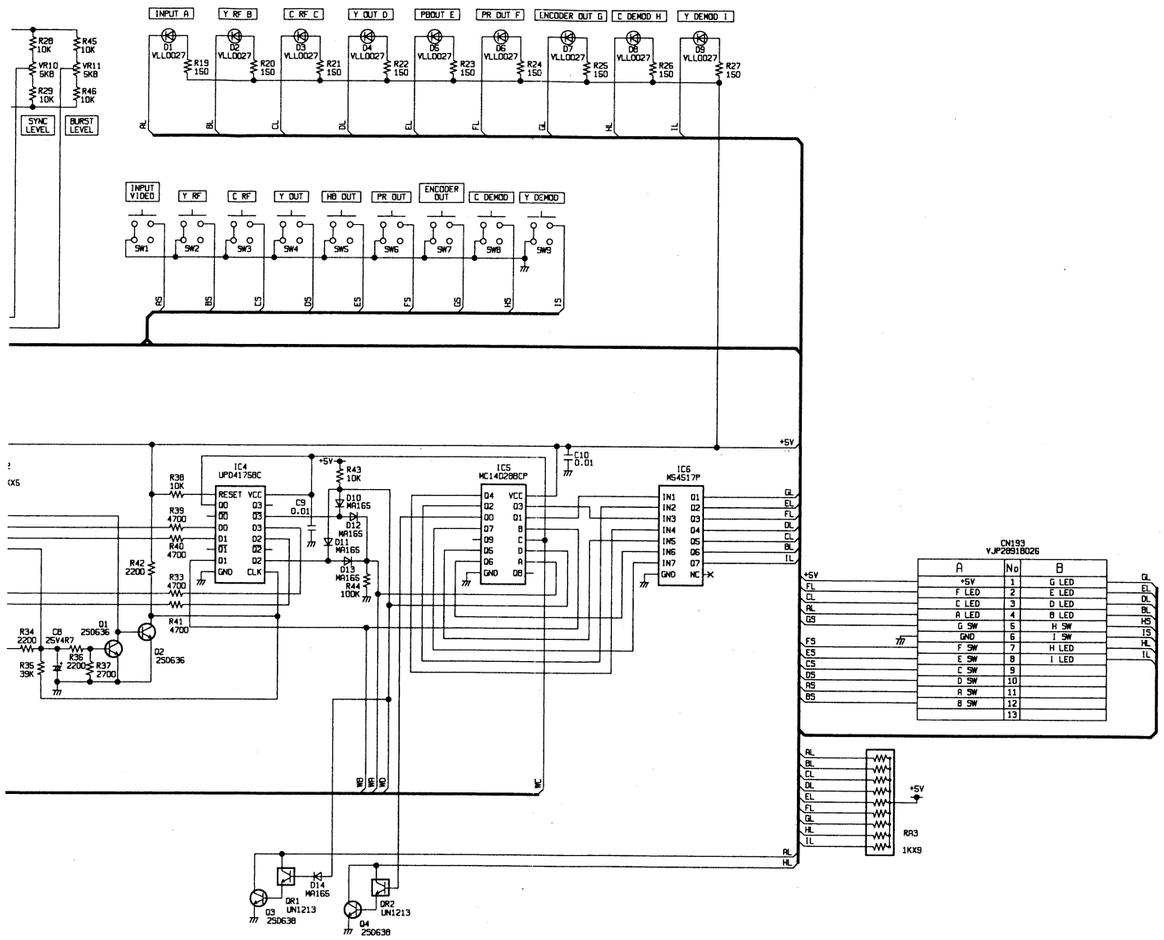

FRONT SW & VR SCHEMATIC DIAGRAM[FOR AU-65,AU-63,AU-

TYPE \ MODEL	AU-665	AU-65	AU-63
NTSC	See Front Page	VEP80552A	VEP80552A
PAL	See Front Page	VEP80552A	VEP80552A

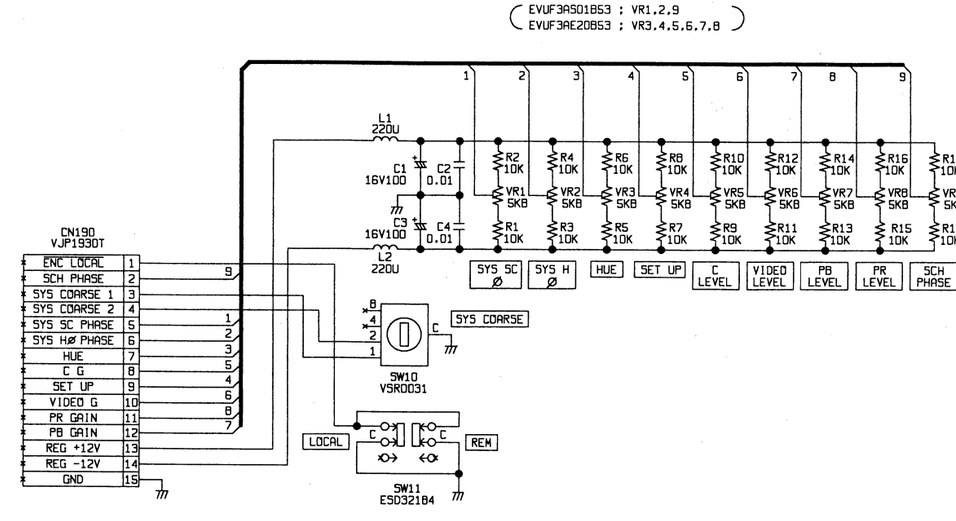

REVERSE SIDE
5-2-43

MECHA INTERFACE SCHEMATI
POWER FILTER SCHEMATIC DI

TYPE \ MODEL	AU-665	AU-65	AU-63	AU-62
NTSC	VEP80550A	VEP80550A	VEP80550A	VEP80550A
PAL	VEP80550A	VEP80550A	VEP80550A	VEP80550A

MECHA INTERFACE SCHEMATIC DIAGRAM

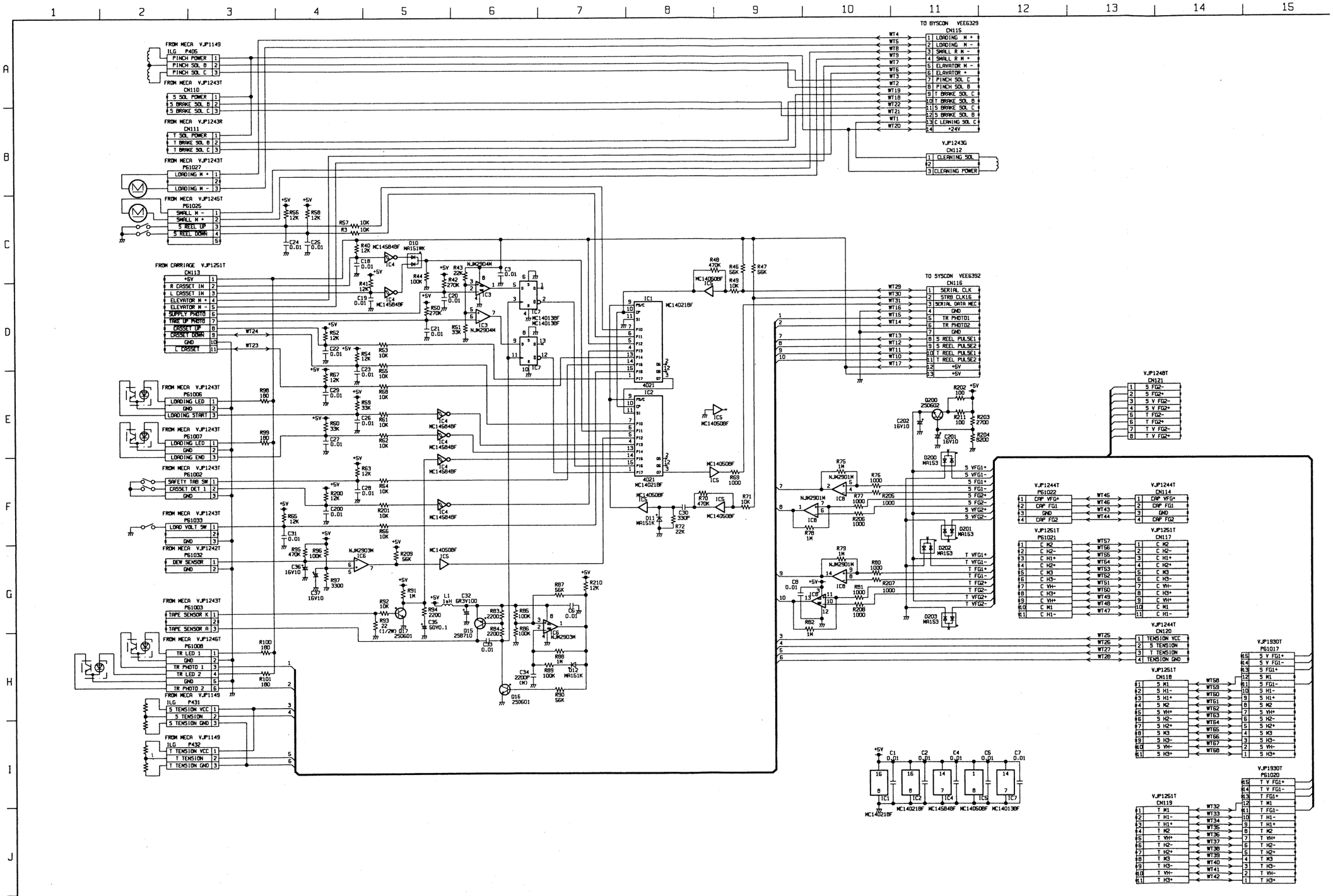

AU-65	AU-63	AU-62
VEP80550A	VEP80550A	VEP80550A
VEP80550A	VEP80550A	VEP80550A

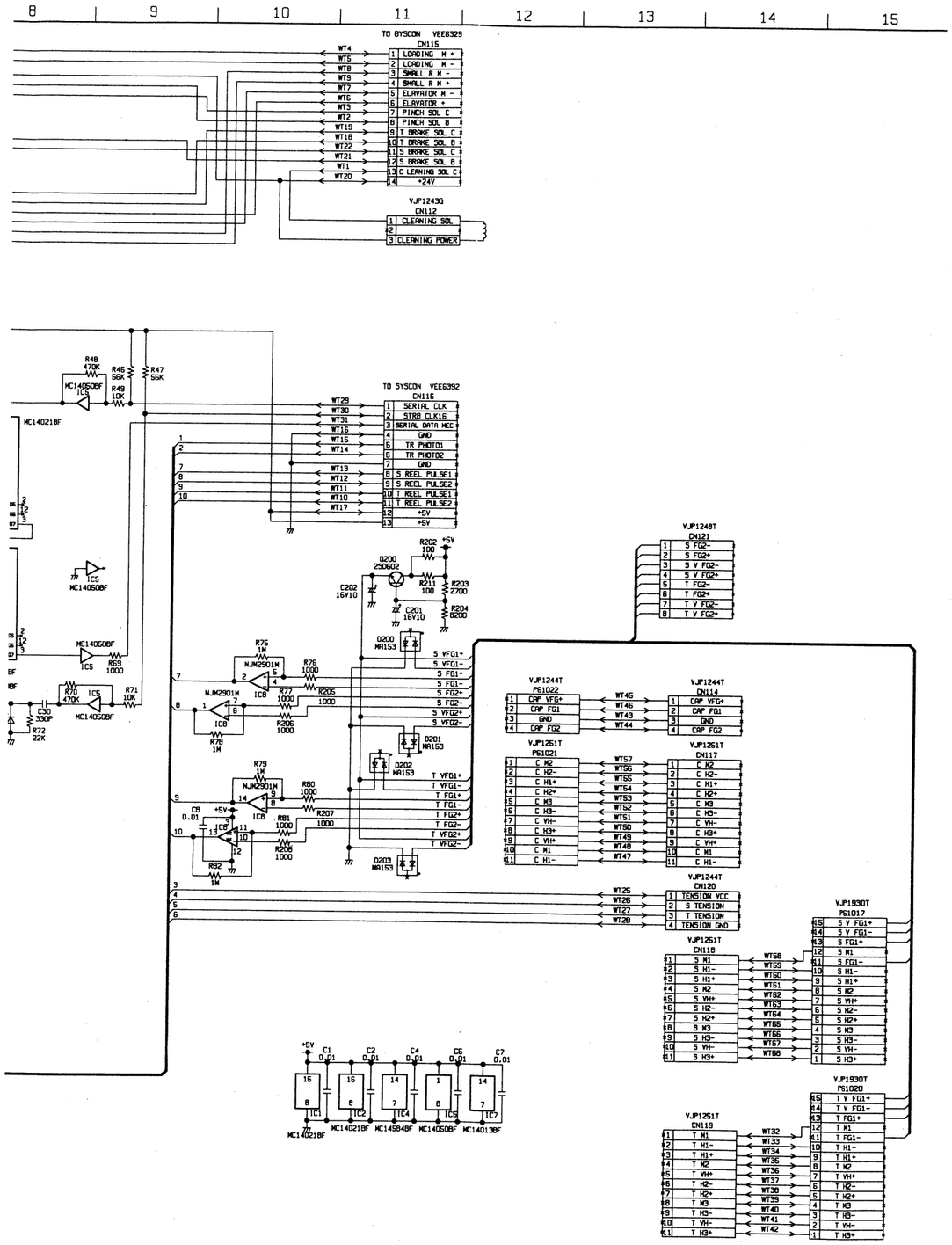

POWER FILTER SCHEMATIC DIAGRAM

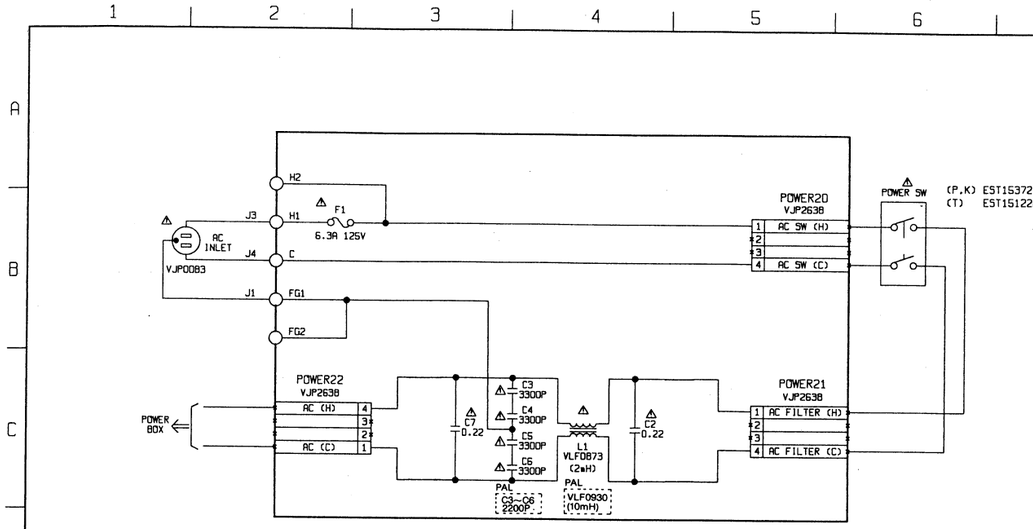

⚠ F1 (P,K) XBA1CG3NU100
(T) XBA1CG3N51

⚠ FUSE HOLDER VJF0318

⚠ CAPACITOR COVER (C2,C7) VMZ1305

⚠ CAPACITOR COVER (C3,C4,C5,C6) VMZ0730

* - PATTERN ONLY

IMPORTANT SAFETY NOTICE:
COMPONENTS IDENTIFIED WITH THE MARK ⚠ HAVE THE SPECIAL CHARACTERISTICS FOR SAFETY.
WHEN REPLACING ANY OF THESE COMPONENTS, USE ONLY THE SAME TYPE.

MODEL / TYPE	AU-665	AU-65	AU-63	AU-62
NTSC	VEP81042A	VEP81042A	VEP81042A	VEP81042A
PAL	VEP81058A	VEP81058A	VEP81058A	VEP81058A

MODEL / TYPE	AU-665	AU-65	AU-63	AU-62
NTSC	VYK3004	VYK3004	VYK3004	VYK3004
PAL	VYK3637	VYK3637	VYK3637	VYK3637

POWER SCHEMATIC DIAGRAM

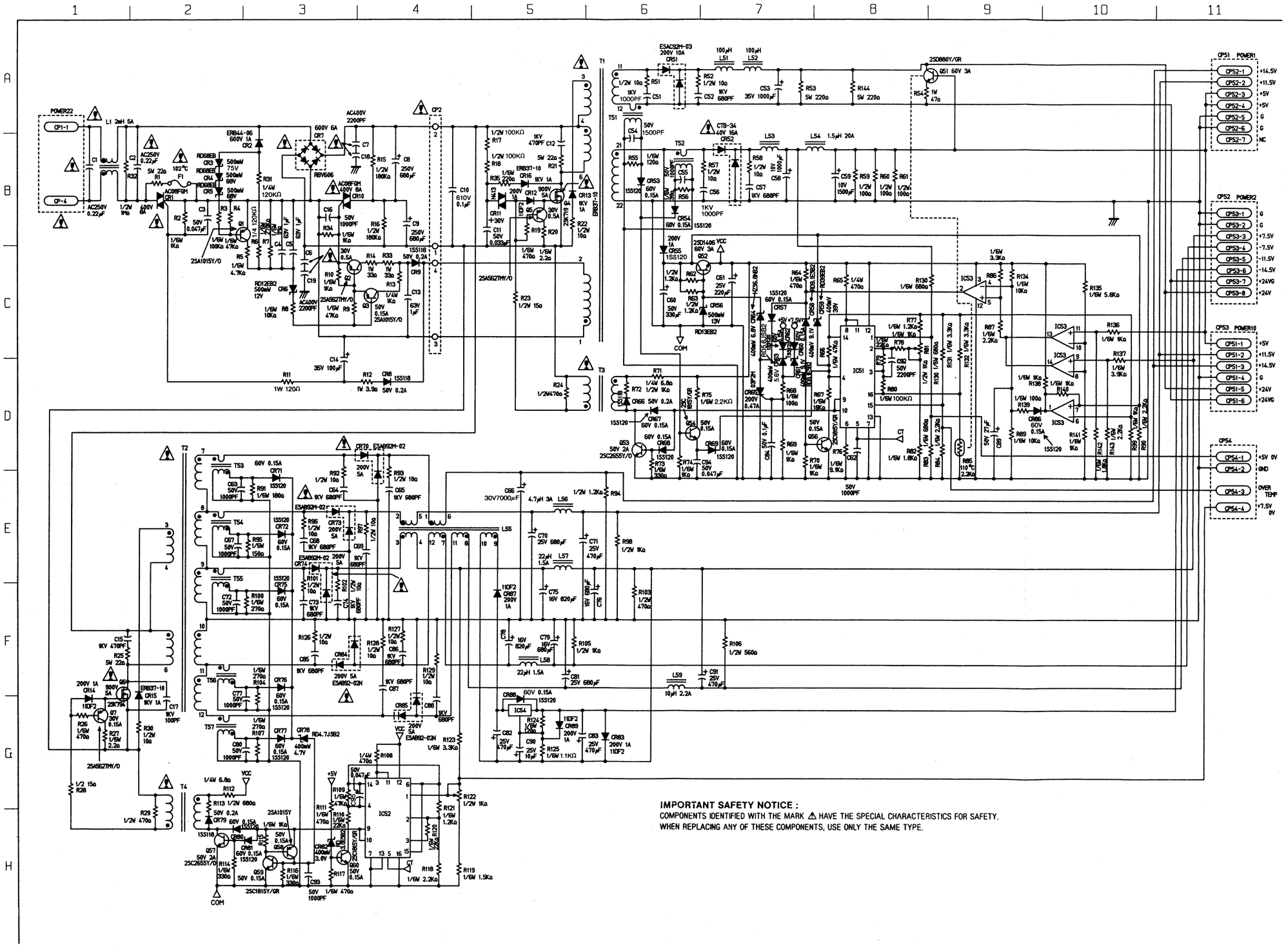

5-2-45

TYPE \ MODEL	AU-665	AU-65	AU-63	AU-62
NTSC	VEP85015A	VEP85015A	VEP85015C	VEP85015B
PAL	VEP85015D	VEP85015D	VEP85015F	VEP85015E

RA/HA SCHEMATIC DIAGRAM

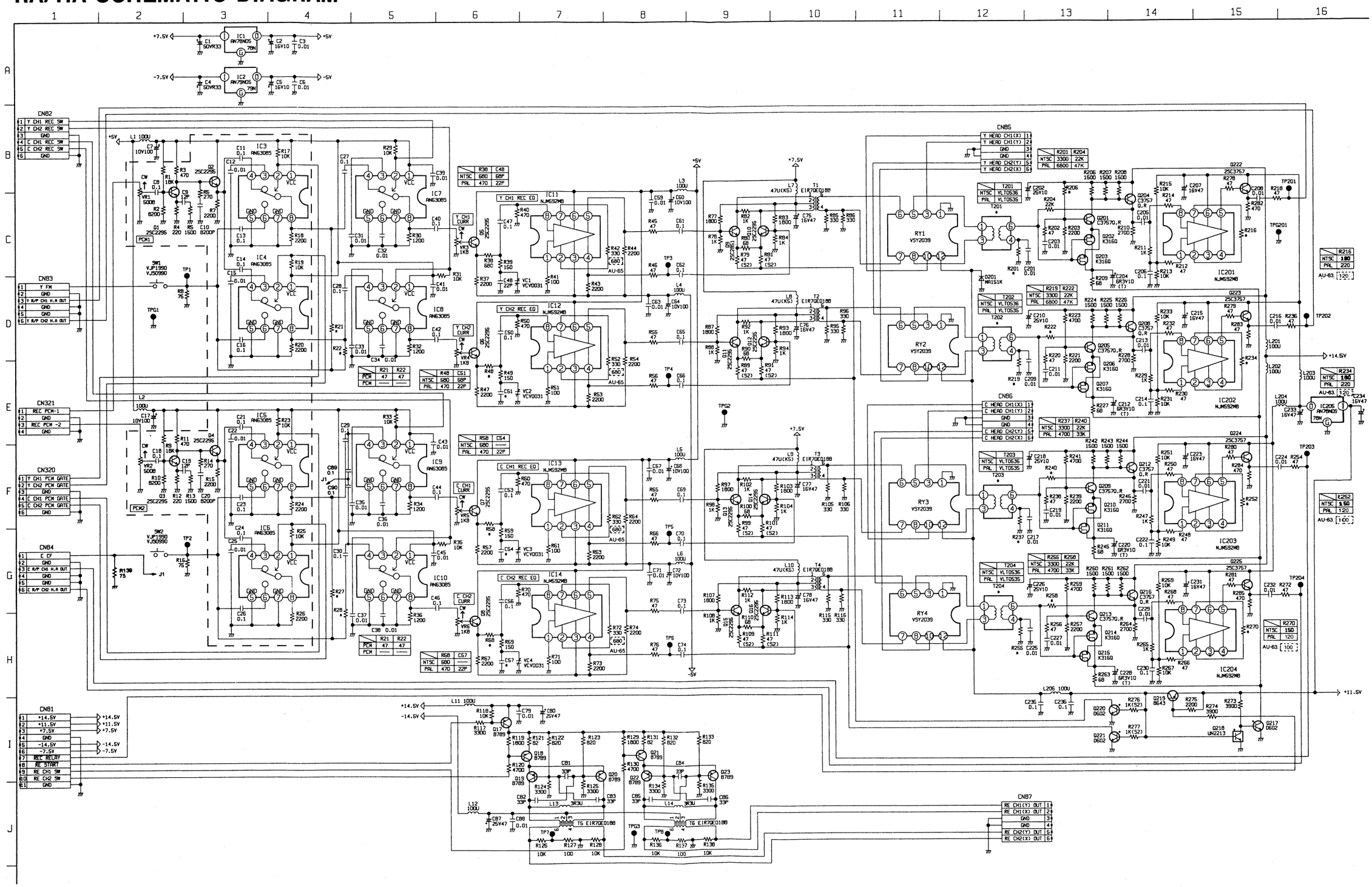

REVERSE SIDE POWER SCHEMATIC DIAGRAM

5-2-46

TYPE \ MODEL	AU-665	AU-65	AU-63	AU-62
NTSC	VEP83104A	VEP83097A	VEP83097B	VEP83097B
PAL	VEP83104B	VEP83097A	VEP83097B	VEP83097B

VIDEO I/O SCHEMATIC DIAGRAM[FOR AU-665]

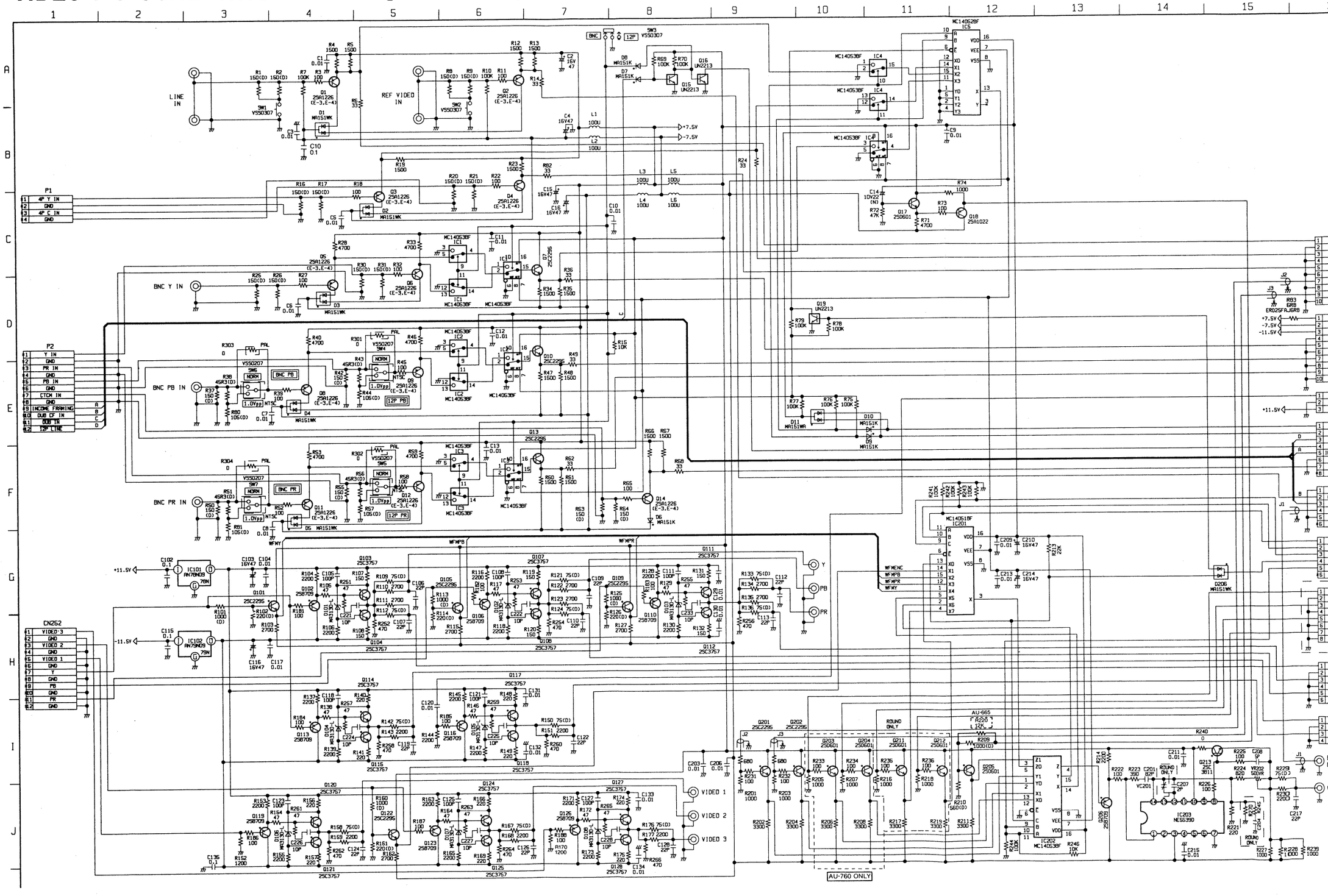

VIDEO I/O SCHEMATIC DIAGRAM [FOR AU-65,AU-63,AU-62]

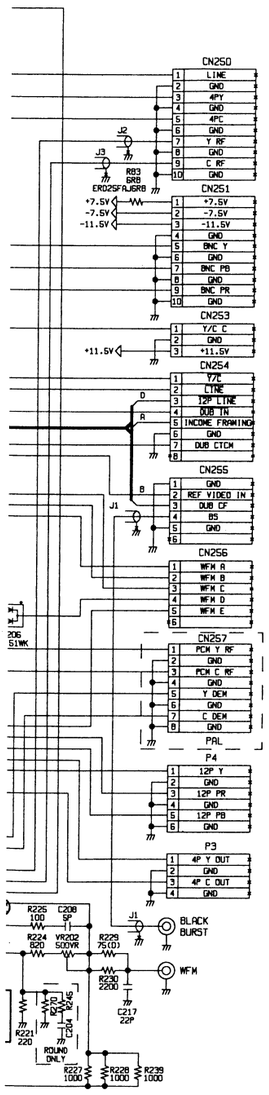

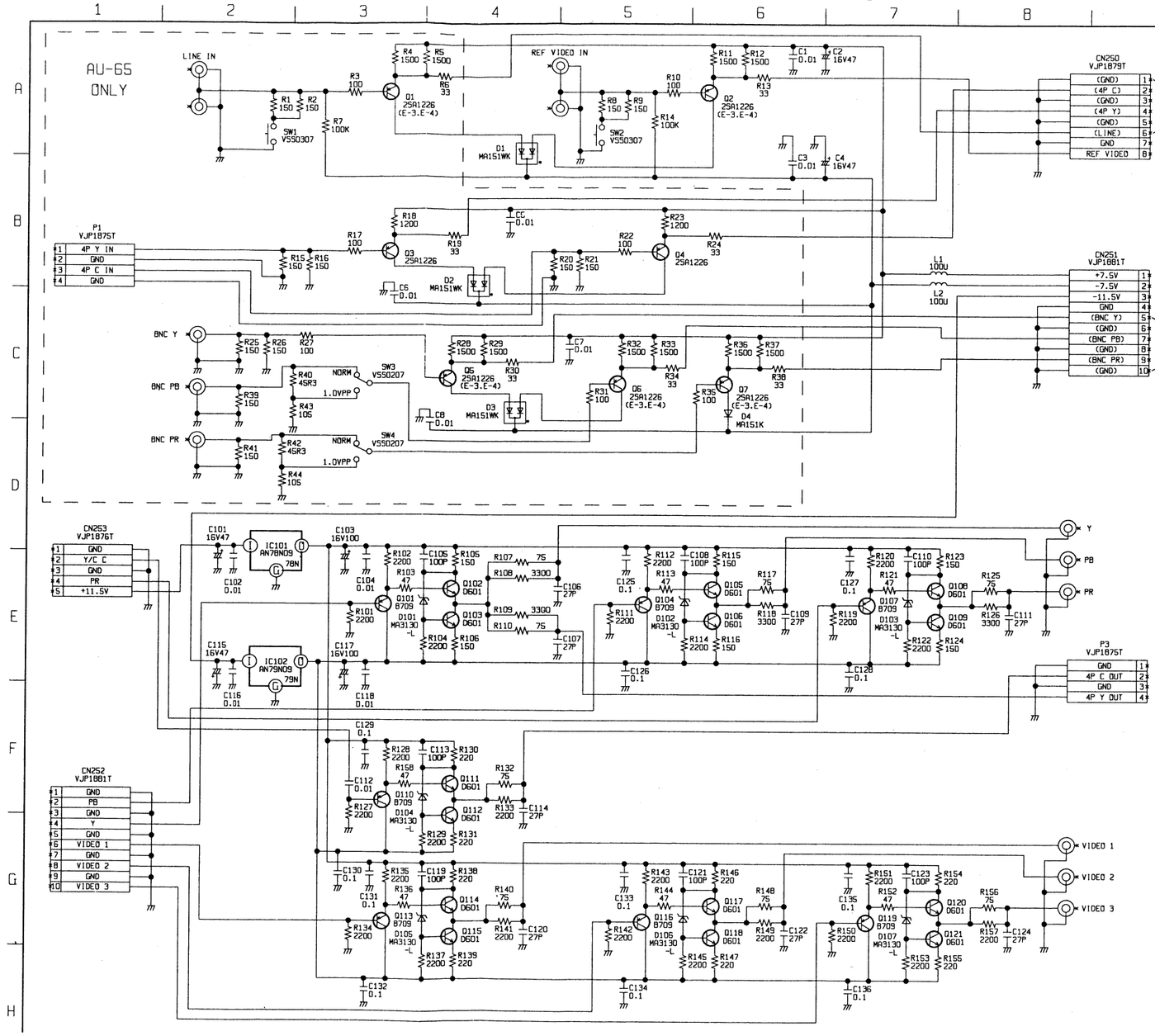

VIDEO VR SCHEMATIC DIAGRAM[FOR AU-665]

MODEL / TYPE	AU-665	AU-65	AU-63	AU-62
NTSC	VEP80621A	Not Used	Not Used	Not Used
PAL	VEP80621A	Not Used	Not Used	Not Used

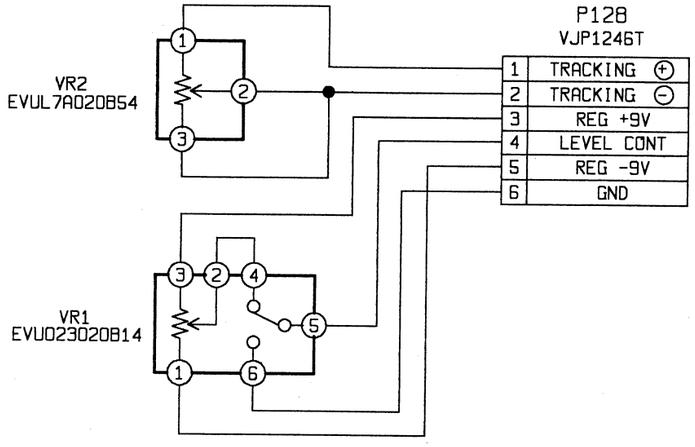

50P REMOTE SCHEMATIC DIAGRAM[FOR AU-665]

MODEL / TYPE	AU-665	AU
NTSC	VEP80558A	
PAL	VEP80558A	

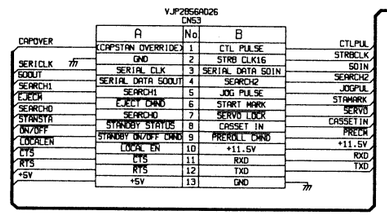

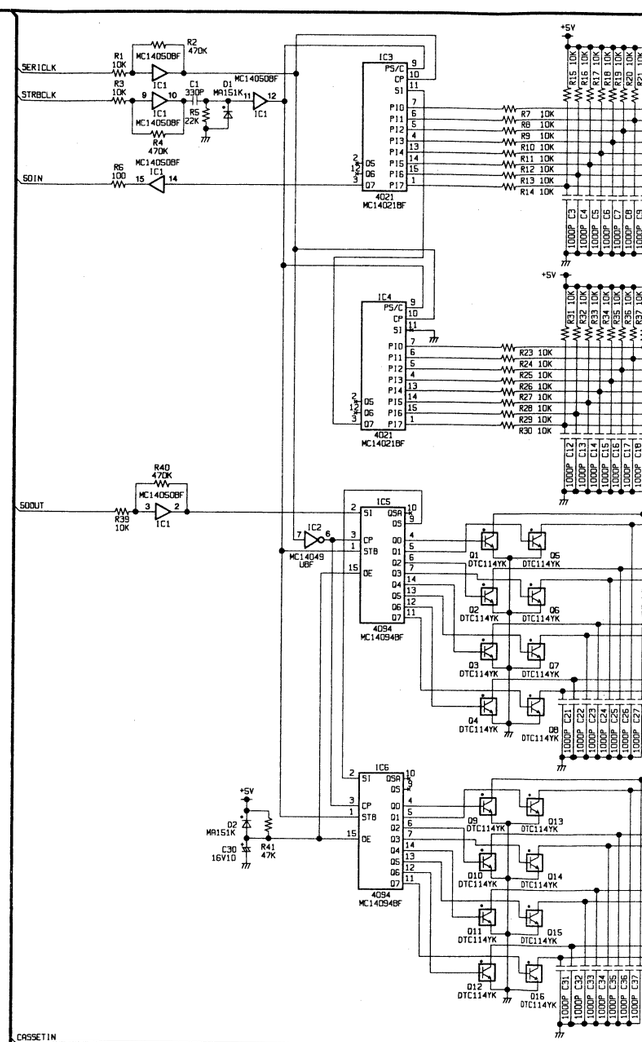

REVERSE SIDE **VIDEO I/O SCHEMATIC DIAGRAM**

MODEL	AU-665	AU-65	AU-63	AU-62
SC	VEP80558A	Refer To AU-MK25 Section		
L	VEP80558A			

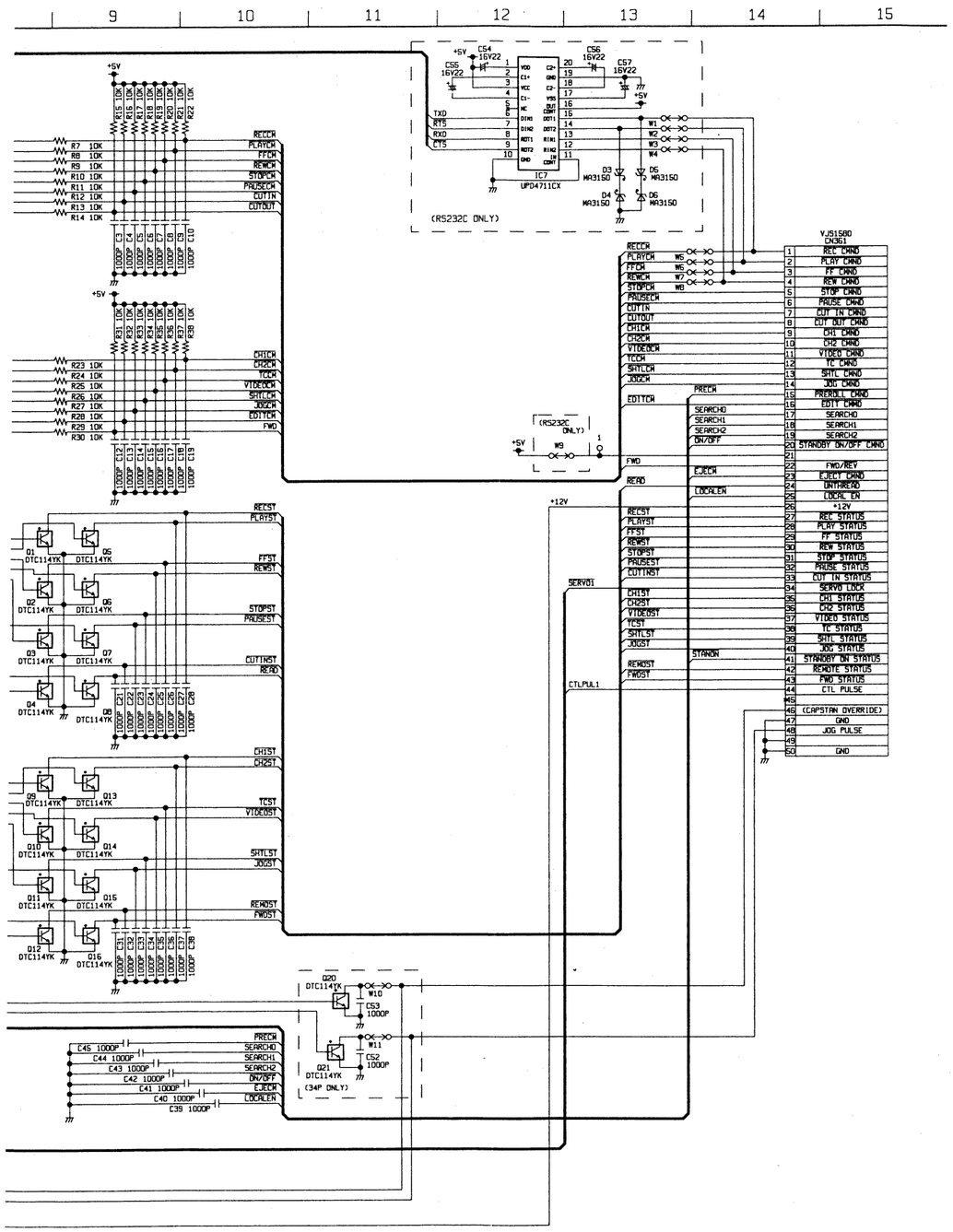

9P REMOTE SCHEMATIC DIAGRAM

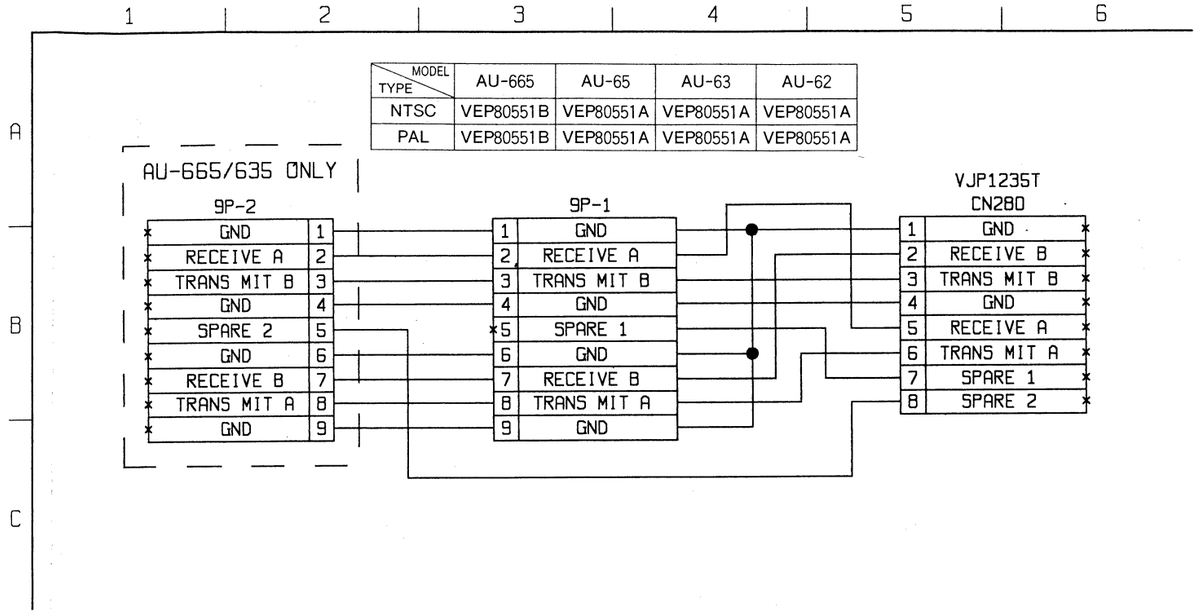

MODEL / TYPE	AU-665	AU-65	AU-63	AU-62
NTSC	VEP80551B	VEP80551A	VEP80551A	VEP80551A
PAL	VEP80551B	VEP80551A	VEP80551A	VEP80551A

Y/C IN/OUT SCHEMATIC DIAGRAM

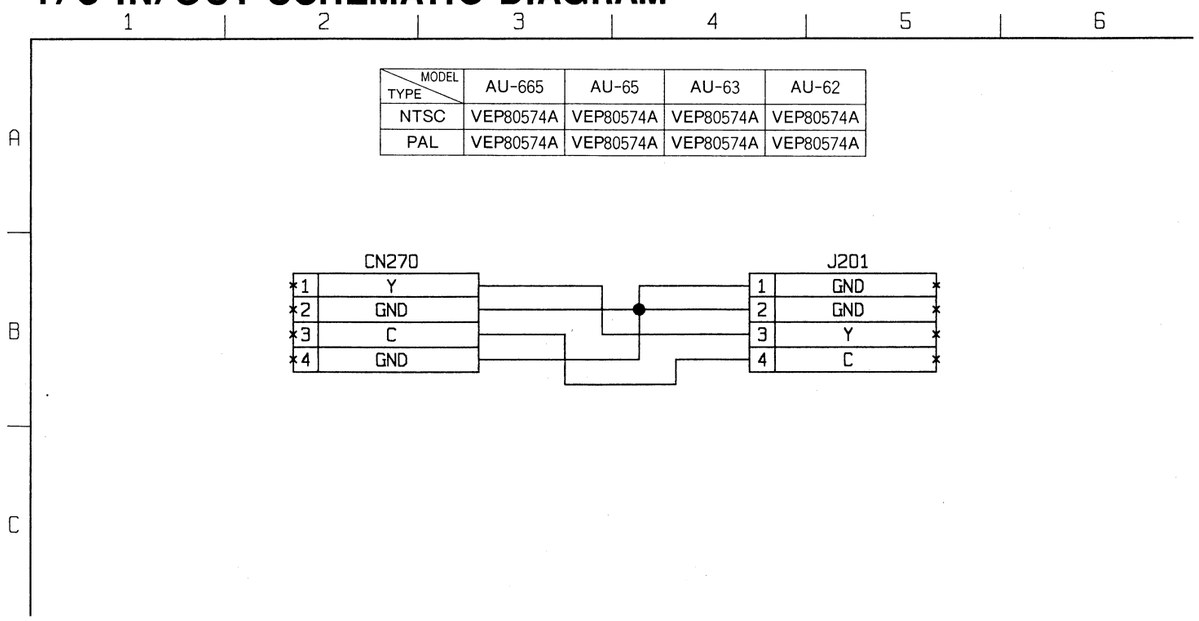

MODEL / TYPE	AU-665	AU-65	AU-63	AU-62
NTSC	VEP80574A	VEP80574A	VEP80574A	VEP80574A
PAL	VEP80574A	VEP80574A	VEP80574A	VEP80574A

W0(MOTHER 1)P.C.BOARD

TYPE \ MODEL	AU-665	AU-65	AU-63	AU-62
NTSC	VEP80548B	VEP80548A	VEP80548D	VEP80548C
PAL	VEP80548E	VEP80548A	VEP80548D	VEP80548C

P.C. Board Location

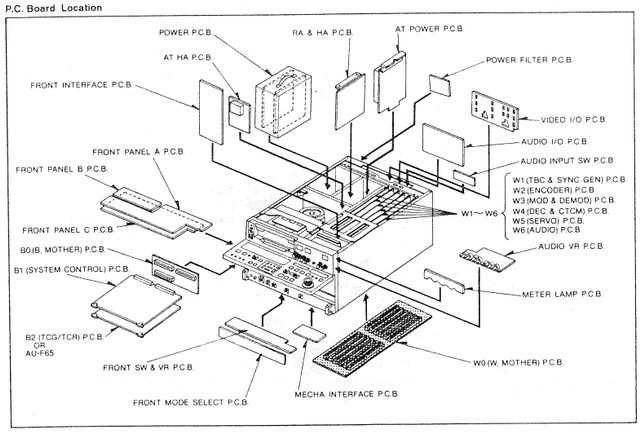

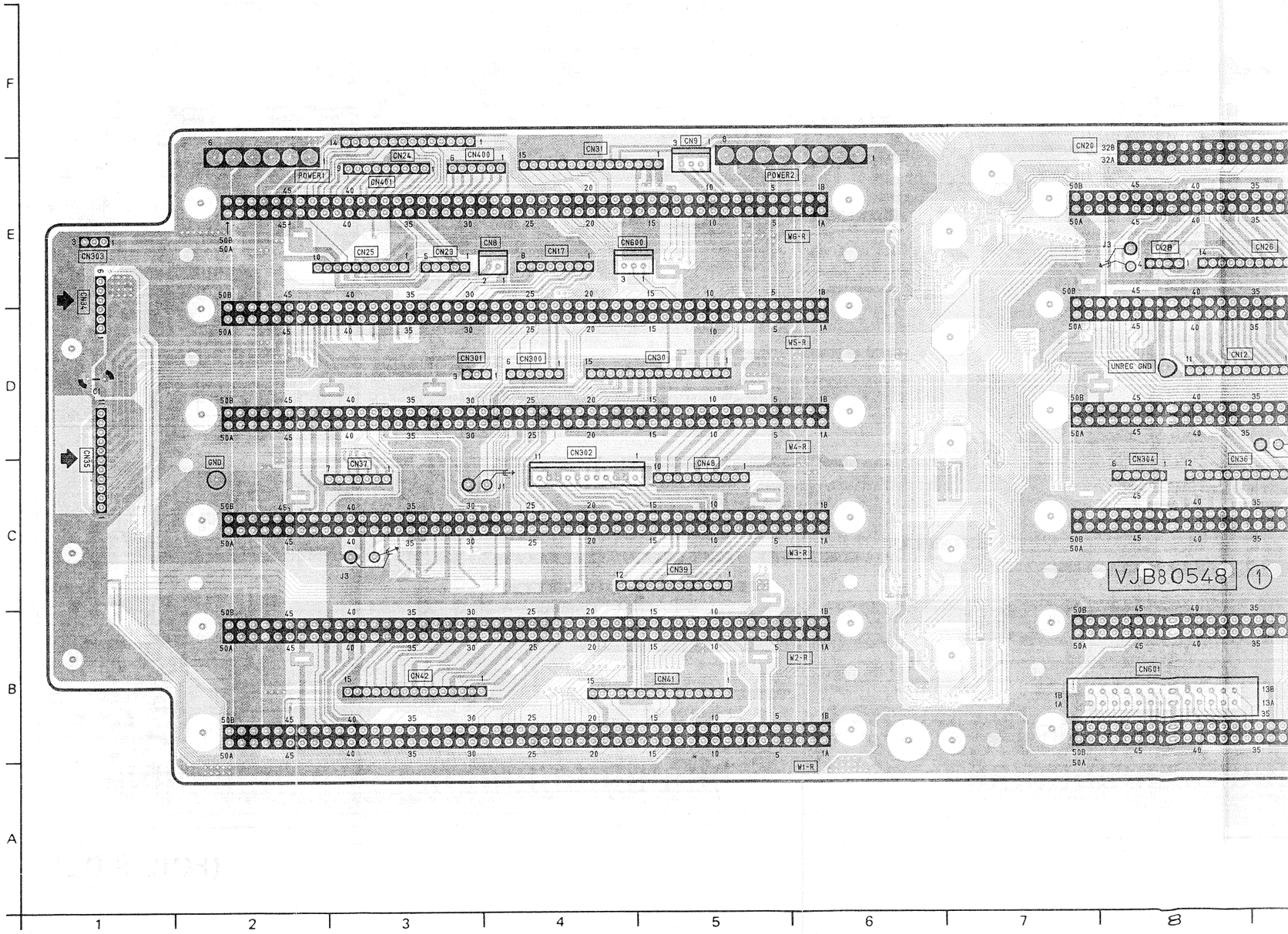

CHIP PART INFORMATION

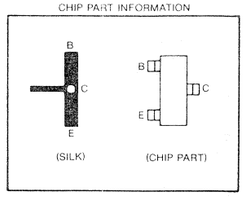

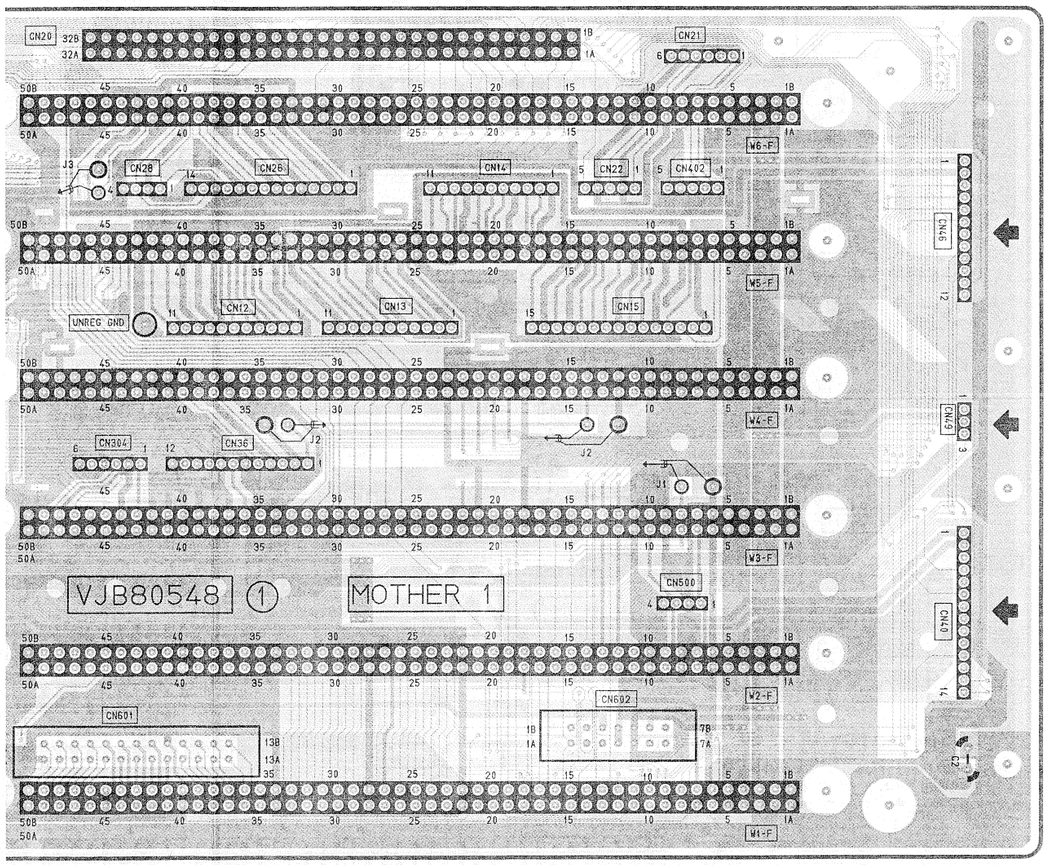

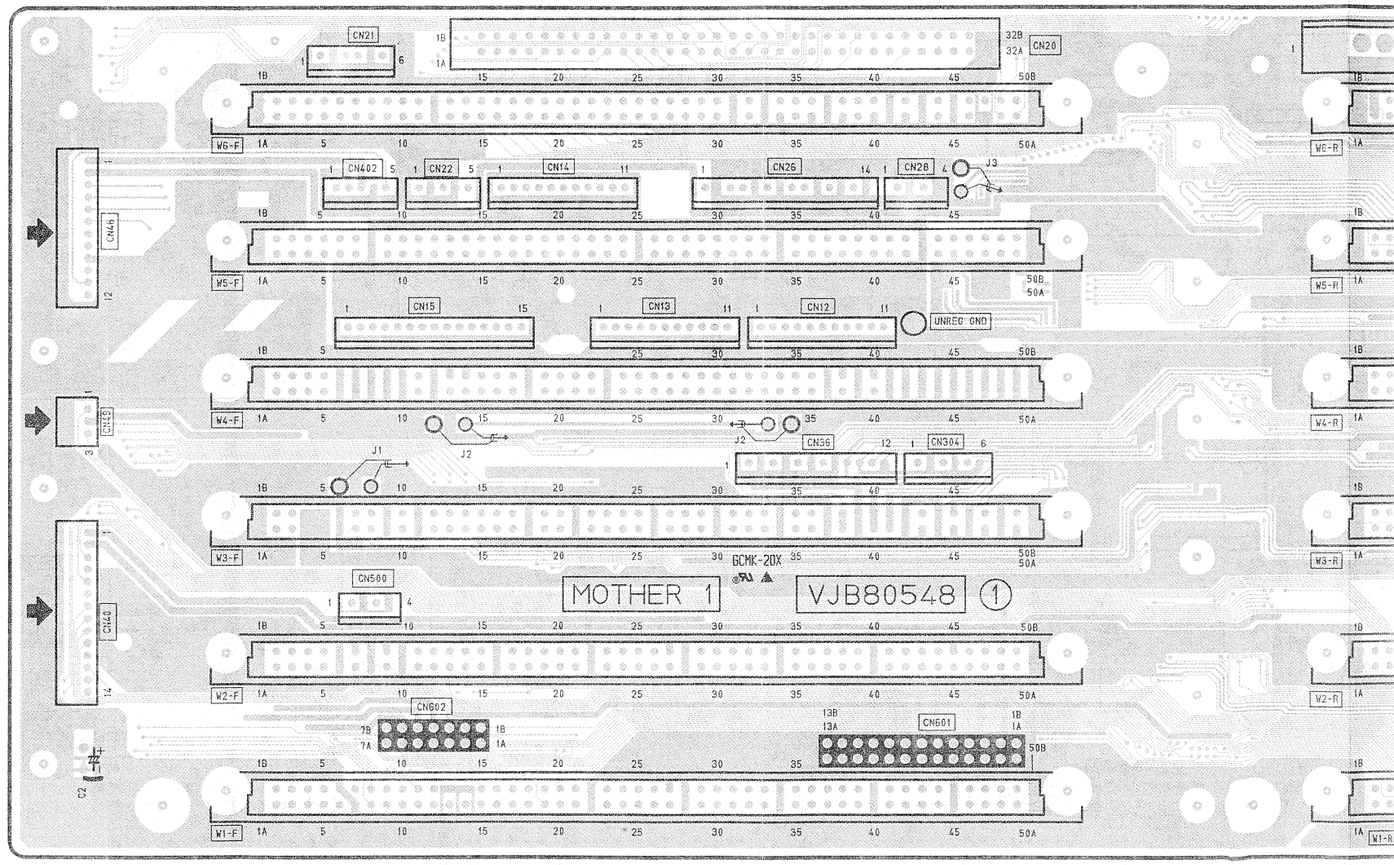

(FOIL SIDE)

8 9 10 11 12 13 14 15 16 17 18 19

CHIP PART INFORMATION

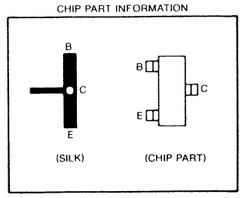

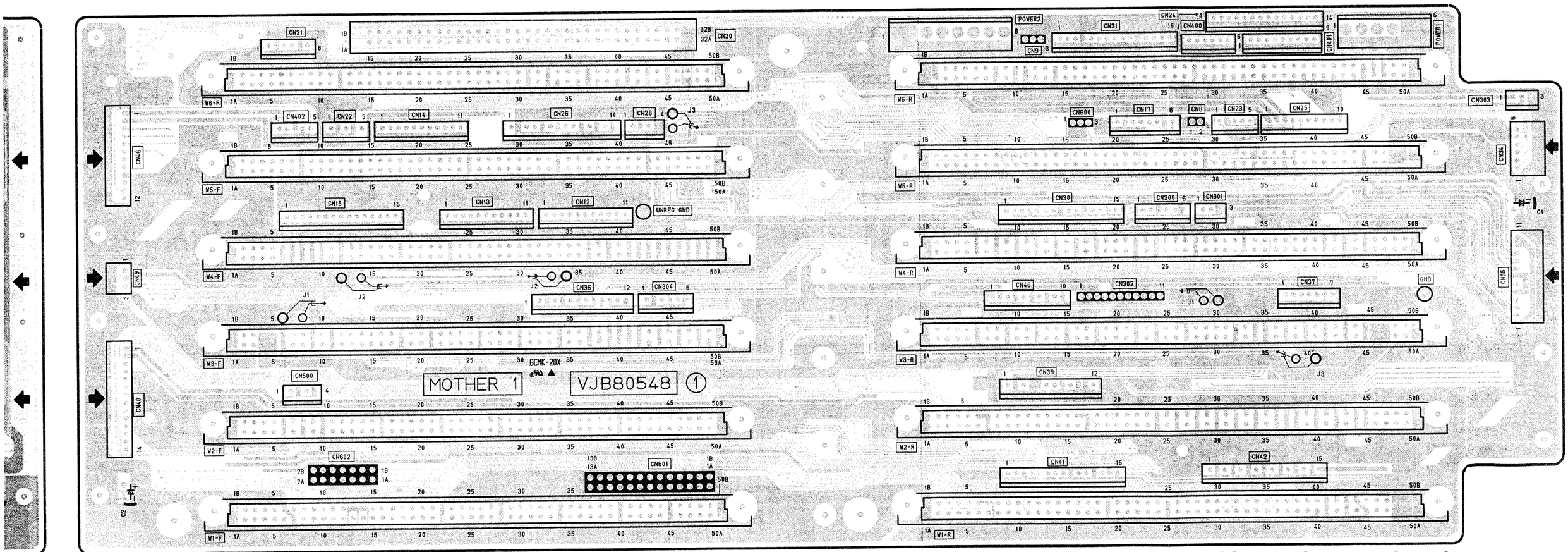

(COMPONENT SIDE)

13 14 15 16 17 18 19 20 21 22 23 24

REVERSE SIDE

W1 TBC & SYNC EN P.C.BOARD

W1(TBC & SYNC GEN)P.C.BOARD

TYPE \ MODEL	AU-665	AU-65	AU-63	AU-62
NTSC	See 5-3-5	VEP88062A	VEP88062A	VEP88062A
PAL	———	VEP88062C	VEP88062C	VEP88062C

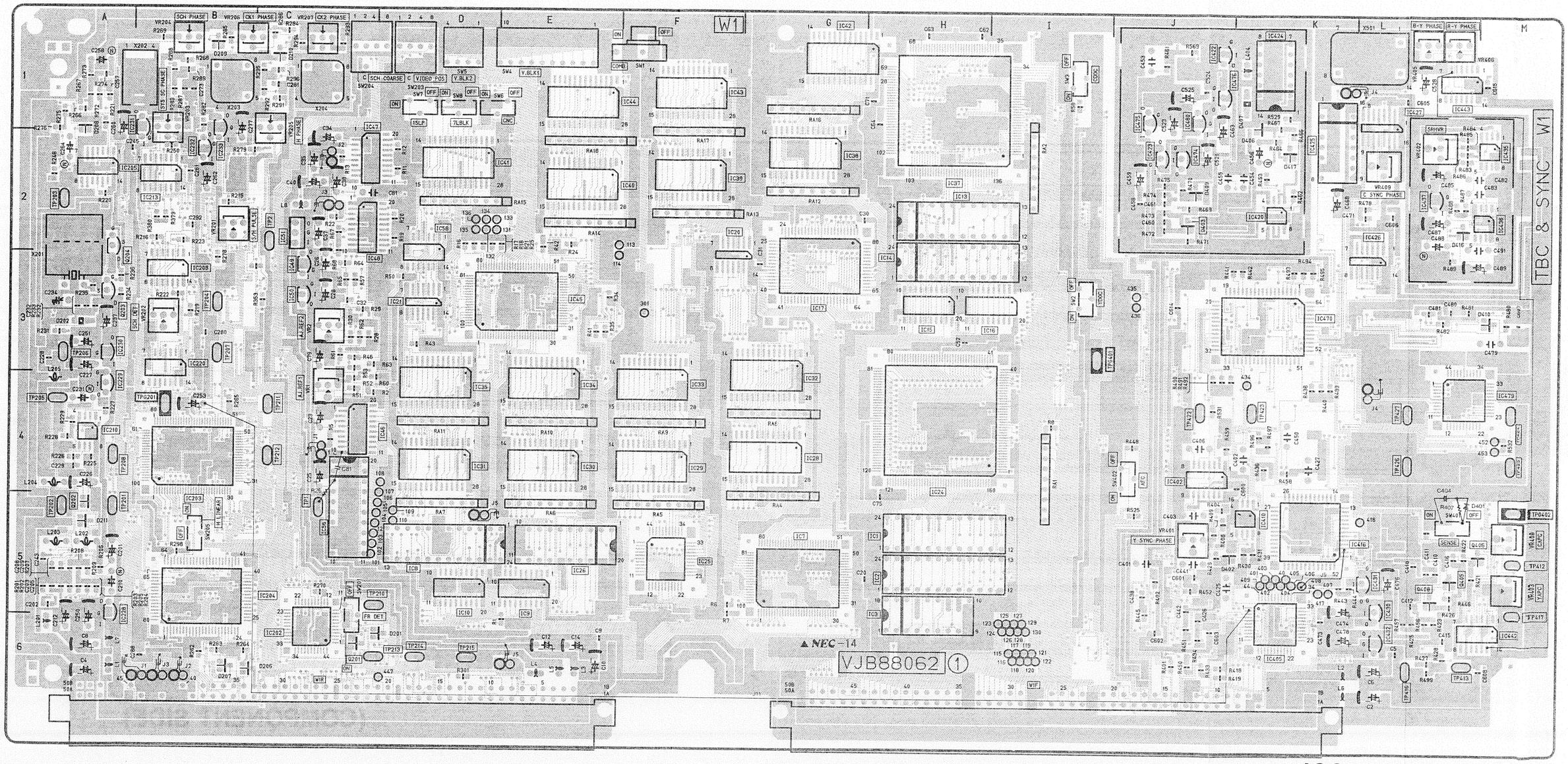

(COMPONENT SIDE)

CHIP PART INFORMATION

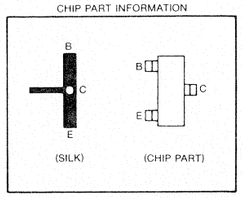

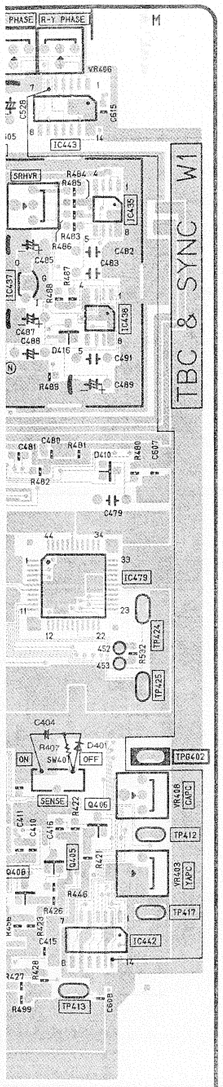

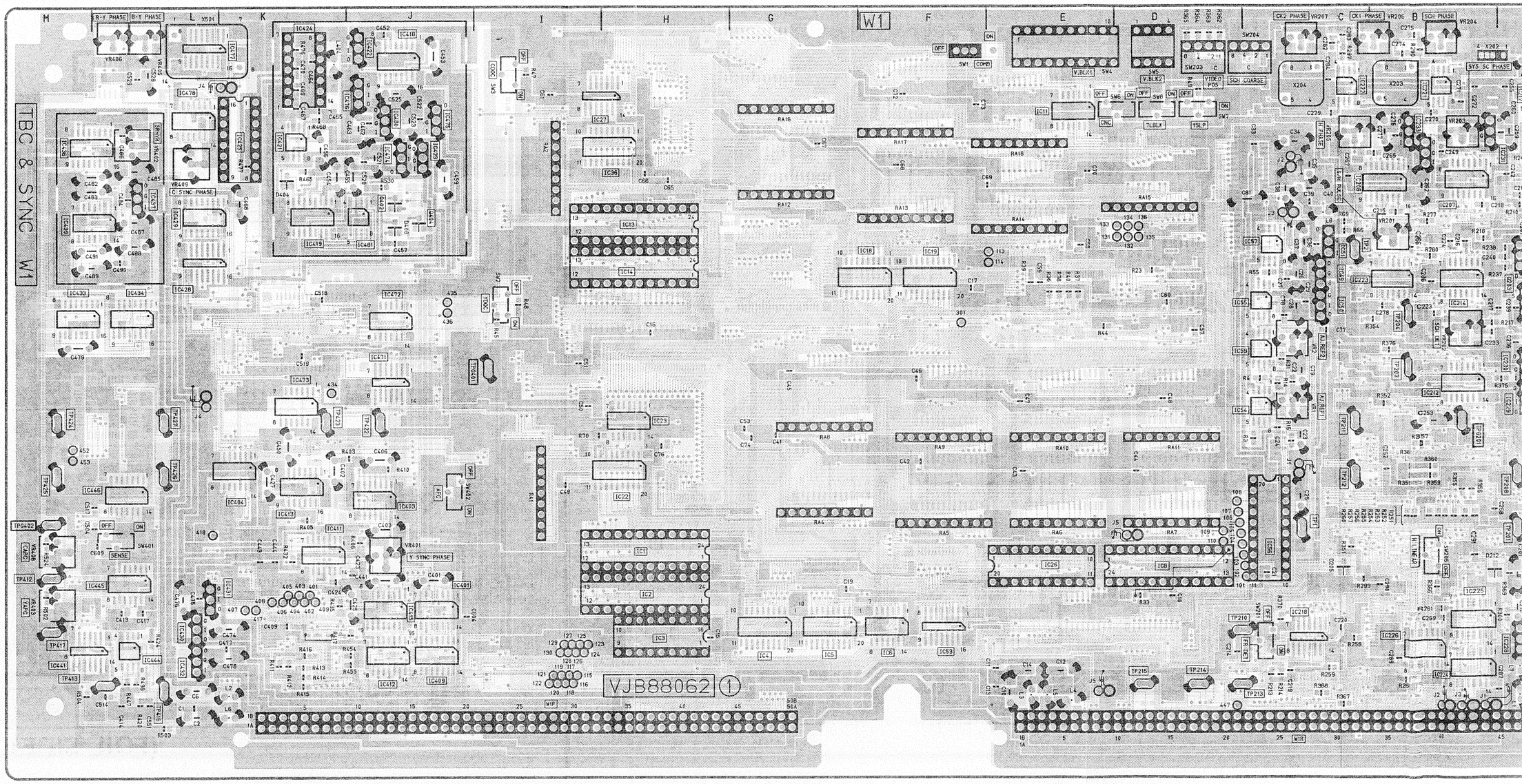

IENT SIDE)

(FOI

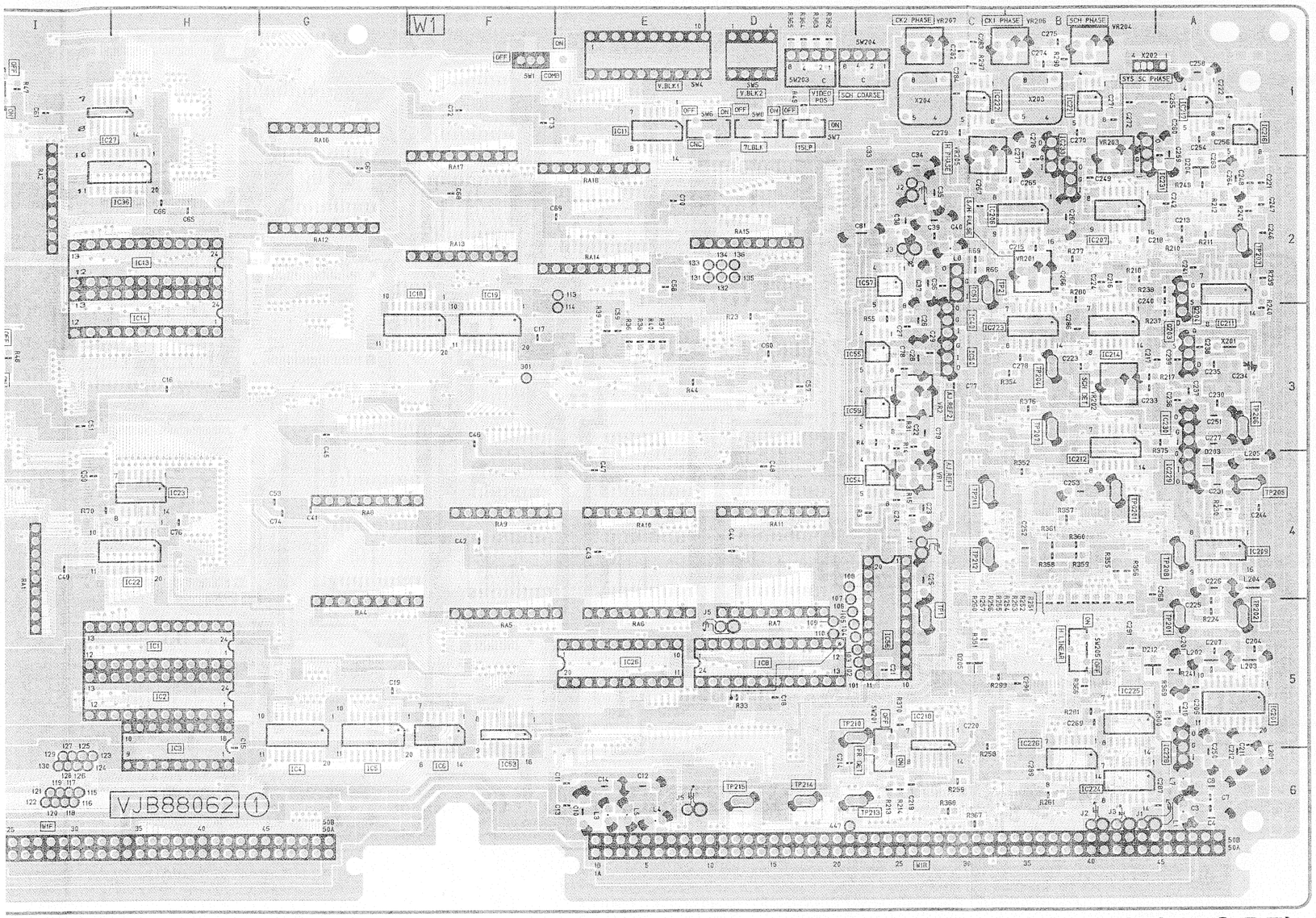

(FOIL SIDE)

P.C. Board Location

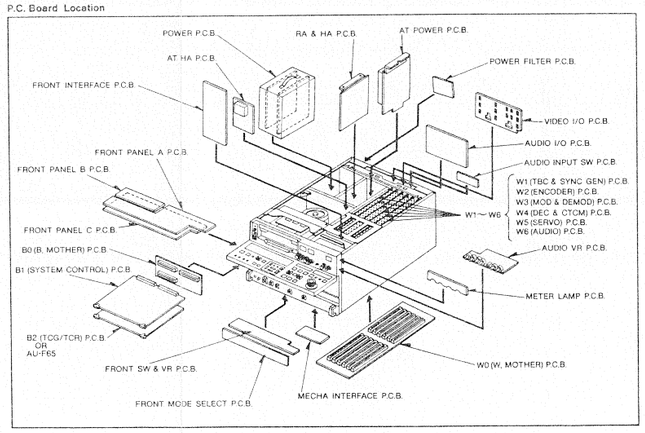

W1 (TBC & SYNCGEN)

COMPONENT SIDE

Transistors

Q201	C-6
Q202	A-5
Q203	A-3
Q204	A-2
Q403	J-2
Q405	L-5
Q406	M-5
Q408	L-5

Integrated Circuits

IC1	H-5
IC2	H-5
IC3	H-5
IC7	G-5
IC8	D-5
IC9	E-5
IC10	D-5
IC13	H-2
IC14	H-3
IC15	H-3
IC16	I-3
IC17	G-3
IC20	F-3
IC21	D-3
IC24	H-4
IC25	F-5
IC26	E-5
IC28	G-4
IC29	F-4
IC30	E-4
IC31	D-4
IC32	G-4
IC33	F-4
IC34	E-4
IC35	D-4
IC37	H-1
IC38	G-2
IC39	F-2
IC40	E-2
IC41	D-2
IC42	G-1
IC43	F-1
IC44	E-1
IC45	E-3
IC46	C-4
IC47	C-2
IC48	C-2
IC49	C-3
IC50	C-3
IC51	C-2
IC56	C-5
IC58	D-3
IC202	C-6
IC203	B-4
IC204	B-5
IC205	A-2
IC208	B-3
IC210	A-4
IC213	B-2
IC220	B-3
IC228	A-6
IC229	A-4
IC230	A-3
IC231	B-1
IC232	B-2
IC233	B-1
IC402	J-4
IC405	K-6
IC410	K-5
IC416	K-5
IC420	K-2
IC422	J-1
IC423	J-2
IC424	K-1
IC425	K-2
IC426	L-3
IC427	L-1
IC430	L-5
IC431	L-5
IC432	L-6
IC435	M-2
IC437	L-2
IC438	M-2
IC442	M-6
IC443	L-1
IC470	K-3
IC474	J-2
IC475	J-1
IC476	J-1
IC479	L-4
IC480	J-1

Test Point

TP1	C-5
TP2	C-2
TP201	A-5
TP202	A-5
TP203	A-2
TP204	B-3
TP205	A-4
TP206	A-3
TP207	B-3
TP208	A-4
TP210	C-5
TP211	C-4
TP212	C-4
TP213	C-6
TP214	D-6
TP215	D-6
TP412	M-5
TP413	L-6
TP413	L-6
TP416	L-6
TP417	M-5
TP422	J-4
TP423	K-4
TP424	M-4
TP425	M-4
TP426	L-4
TP427	L-4

TP GND

TPG201	B-4
TPG401	I-3
TPG402	M-5

Adjustments

VR1	C-4
VR2	C-3
VR201	B-2
VR202	B-3
VR203	B-1
VR204	B-1
VR205	C-2
VR206	B-1
VR207	C-1
VR401	J-5
VR402	L-2
VR403	M-5
VR405	L-1
VR406	L-1
VR408	M-5
VR409	L-2

FOIL SIDE

Transistor

Q402	J-2
Q404	J-2

Integrated Circuits

IC4	G-5
IC5	G-5
IC6	F-5
IC11	E-1
IC18	F-3
IC19	F-3
IC22	H-4
IC23	H-4
IC27	H-1
IC36	H-2
IC53	F-5
IC54	C-4
IC55	C-3
IC57	C-2
IC59	C-3
IC201	A-5
IC206	B-2
IC207	B-2
IC209	A-4
IC211	A-3
IC212	B-3
IC214	B-3
IC216	A-1
IC217	A-1
IC218	C-5
IC221	B-1
IC222	C-1
IC223	B-3
IC224	B-6
IC225	B-5
IC226	B-6
IC401	J-5
IC403	J-4
IC404	K-4
IC409	J-6
IC411	K-5
IC412	J-6
IC413	K-4
IC415	J-5
IC418	J-1
IC419	K-2
IC421	K-2
IC428	L-3
IC429	L-2
IC433	M-3
IC434	L-3
IC436	L-2
IC439	L-2
IC441	M-6
IC444	L-6
IC445	L-5
IC446	L-4
IC471	J-3
IC472	J-3
IC473	K-4
IC477	L-1
IC478	L-1
IC481	J-2

W1 (TBC & SYNC GEN) FOR AU-665/PE-P

COMPONENT SIDE

Transistors

Q201	C-6
Q202	A-5
Q203	A-3
Q204	A-2
Q400	L-5
Q403	J-2
Q405	L-5
Q406	L-5

Integrated Circuits

IC4	D-5
IC5	D-5
IC6	E-5
IC7	E-4
IC9	E-5
IC11	D-2
IC12	E-5
IC17	E-3
IC20	G-3
IC21	F-3
IC24	H-5
IC25	H-2
IC26	H-1
IC27	H-1
IC28	G-4
IC29	G-5
IC30	H-4
IC31	G-1
IC32	H-2
IC33	F-4
IC34	F-2
IC35	F-5
IC37	F-1
IC45	E-2
IC46	D-4
IC47	D-2
IC48	D-2
IC49	C-3
IC50	C-3
IC51	C-2
IC53	E-5
IC56	C-5
IC58	D-2
IC81	F-3
IC83	G-3
IC202	C-6
IC203	B-4
IC204	B-5
IC205	A-2
IC208	B-3
IC210	A-4
IC213	B-2
IC220	B-3
IC228	A-6
IC229	A-4
IC230	A-3
IC231	B-1
IC232	B-2
IC233	B-1
IC402	J-4
IC405	K-6
IC410	K-5
IC416	K-5
IC420	K-2
IC422	J-1
IC423	J-2
IC424	K-1
IC425	K-2
IC426	L-3
IC427	L-1
IC430	L-5
IC431	L-5
IC432	L-6
IC435	M-2
IC437	L-2
IC438	M-2
IC442	M-6
IC443	L-1
IC470	K-3
IC474	J-2
IC475	J-1
IC476	J-1
IC479	L-4
IC480	J-1
IC500	K-4

Test Point

TP1	C-5
TP2	C-2
TP201	A-5
TP202	A-5
TP203	A-2
TP204	B-3
TP205	A-4
TP206	A-3
TP207	B-3
TP208	A-4
TP210	C-5
TP211	C-4
TP212	C-4
TP213	C-6
TP214	D-6
TP215	D-6
TP412	M-5
TP413	L-6
TP416	L-6
TP417	M-5
TP422	J-4
TP423	K-4
TP424	M-4
TP425	M-4
TP426	L-4
TP427	L-4

TP GND

TPG201	B-4
TPG401	J-3
TPG402	M-5

Adjustments

VR1	C-4
VR2	C-3
VR201	B-2
VR202	B-3
VR203	B-2
VR204	B-1
VR205	C-2
VR206	B-1
VR207	C-1
VR401	J-5
VR402	L-2
VR403	M-5
VR405	L-1
VR406	L-1
VR409	L-2

S W

SW1	F-1
SW2	I-3
SW3	I-1
SW4	E-1
SW5	D-1
SW6	D-1
SW7	D-1
SW8	D-1
SW201	C-5
SW203	D-1
SW204	C-1
SW205	B-5
SW401	L-5
SW402	J-4

FOIL SIDE

Transistor

Q203	A-3
Q204	A-2
Q402	J-2
Q404	J-2

Integrated Circuits

IC18	D-3
IC19	E-4
IC22	H-5
IC23	H-5
IC35	F-5
IC36	H-3
IC37	F-1
IC49	C-3
IC50	C-3
IC51	C-2
IC54	D-4
IC55	D-3
IC56	C-5
IC57	C-2
IC59	D-3
IC70	D-4
IC71	E-4
IC72	F-4
IC77	H-2
IC80	G-1
IC82	G-3
IC201	A-5
IC206	B-2
IC207	B-2
IC209	A-4
IC211	A-2
IC212	B-3
IC214	B-3
IC216	A-1
IC217	A-1
IC218	C-5
IC221	B-1
IC222	C-1
IC223	B-3
IC224	B-6
IC225	B-5
IC226	B-6
IC228	A-6
IC229	A-4
IC230	A-3
IC231	B-2
IC232	B-2
IC233	B-1
IC401	J-5
IC403	J-4
IC404	K-4
IC409	J-6
IC411	K-5
IC412	J-6
IC413	K-4
IC415	J-5
IC418	J-1
IC419	K-2
IC421	K-2
IC422	J-1
IC423	J-2
IC424	K-1
IC425	K-2
IC428	L-2
IC429	L-2
IC430	L-5
IC431	L-5
IC432	L-6
IC433	M-3
IC434	L-3
IC436	L-2
IC437	L-2
IC439	M-2
IC441	L-6
IC444	L-6
IC445	L-5
IC446	L-4
IC471	J-3
IC472	J-3
IC473	K-4
IC474	J-2
IC475	J-1
IC476	J-1
IC477	L-2
IC478	L-1
IC480	J-1
IC481	J-2
IC497	M-4
IC498	M-3
IC499	K-4

Test Point

TP1	C-5
TP2	C-2
TP201	A-5
TP202	A-5
TP203	A-2
TP204	B-3
TP205	A-4
TP206	A-3
TP207	B-3
TP208	A-4
TP210	D-5
TP211	C-4
TP212	C-4
TP213	D-6
TP214	D-6
TP215	D-6
TP412	M-5
TP413	L-6
TP416	L-6
TP417	M-5
TP422	J-4
TP423	K-4
TP424	M-4
TP425	M-4
TP426	L-4
TP427	L-4

TP GND

TPG201	B-4
TPG401	J-3
TPG402	M-5

Adjustments

VR1	C-4
VR2	C-3
VR201	B-2
VR202	B-3
VR203	B-2
VR204	B-1
VR205	C-2
VR206	B-1
VR207	C-1
VR401	J-5
VR402	L-2
VR403	M-5
VR405	L-1
VR406	L-1
VR408	M-5
VR409	L-2

S W

SW1	F-1
SW2	I-3
SW3	I-1
SW4	E-1
SW5	D-1
SW6	D-1
SW7	D-1
SW8	D-1
SW201	C-5
SW203	D-1
SW204	C-1
SW205	B-5
SW401	L-5
SW402	J-4

W1 (TBC & SYNC GEN) P.C.BOARD

TYPE \ MODEL	AU-665	AU-65	AU-63	AU-62
NTSC	VEP88077A	See Page 5-3-2		
PAL	———			

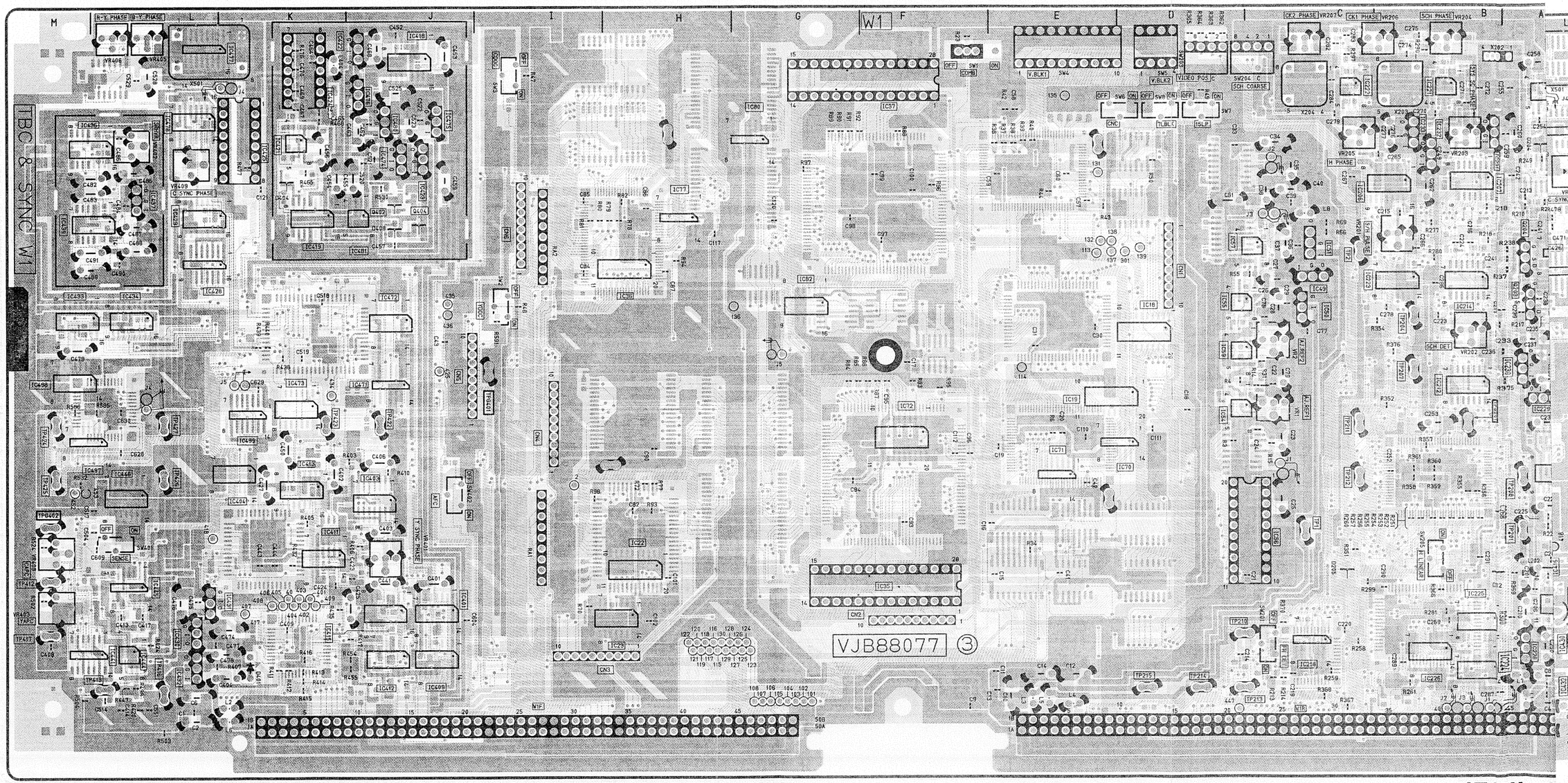

(FOIL S PON

CHIP PART INFORMATION

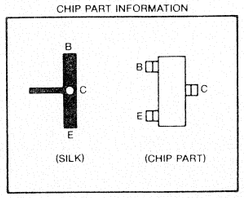

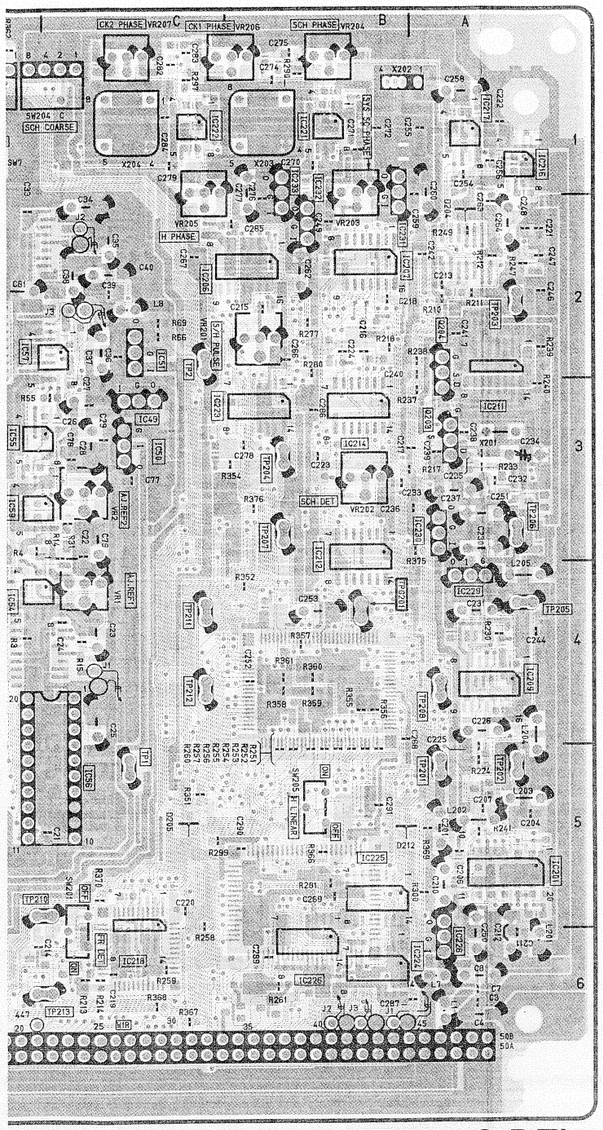

(FOIL SIDE)

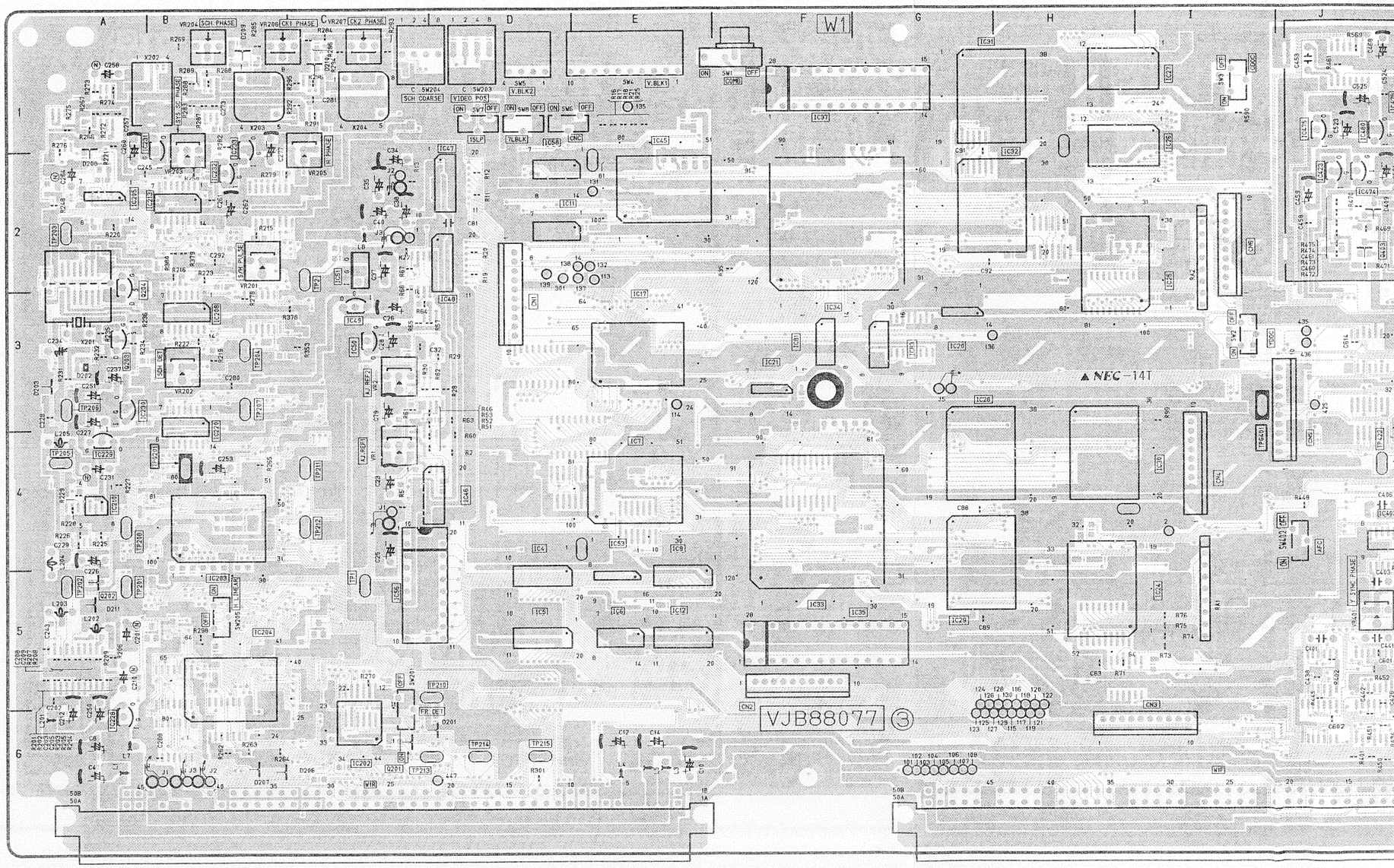

W1 SUB P.C.BOARD

TYPE \ MODEL	AU-665	AU-65	AU-63	AU-62
NTSC	VEP80666A	Not Used	Not Used	Not Used
PAL	———	Not Used	Not Used	Not Used

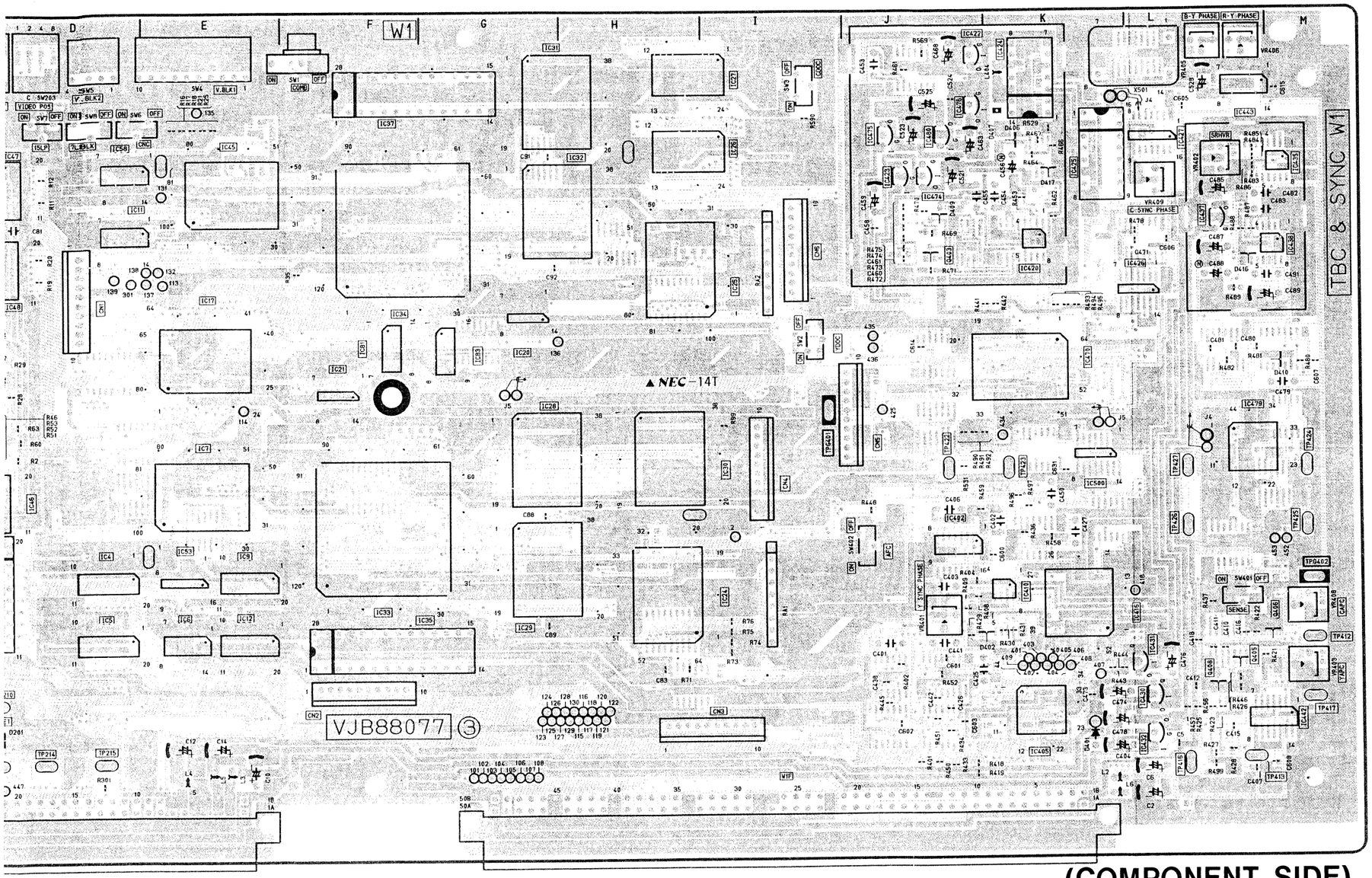

(COMPONENT SIDE)

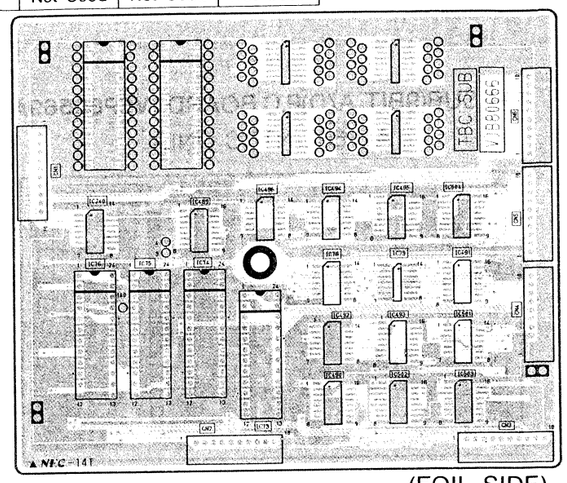

(FOIL SIDE)

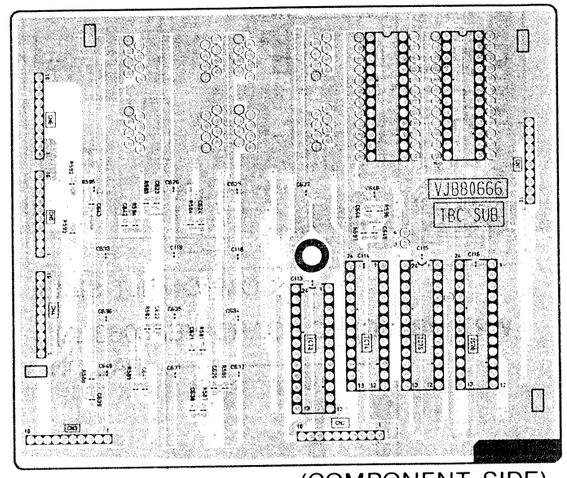

(COMPONENT SIDE)

P.C. Board Location

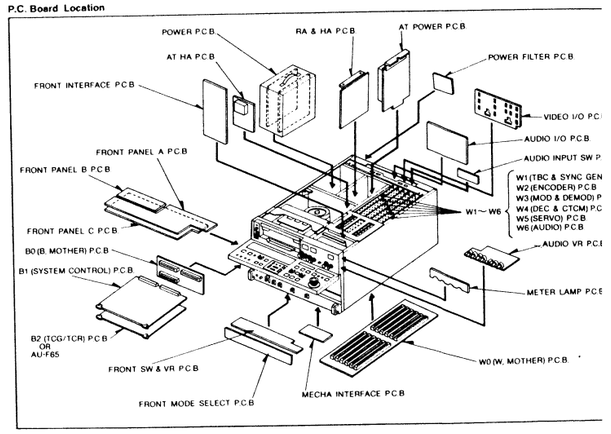

W2(ENCODER)P.C.BOARD

TYPE \ MODEL	AU-665	AU-65	AU-63	AU-62
NTSC	VEP88063B	VEP88063A	VEP88063A	VEP88063A
PAL	VEP88063E	VEP88063C	VEP88063C	VEP88063C

W2 SUB(9BIT A/D)P.C.BOARD **(VEP80569A)**

AU-665 NTSC ONLY

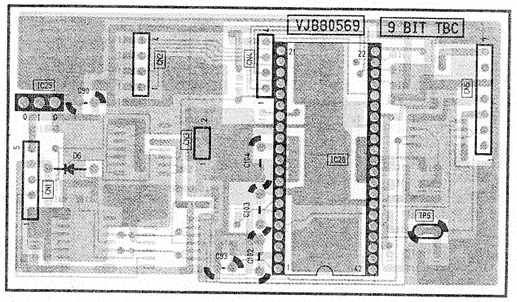

(FOIL SIDE)

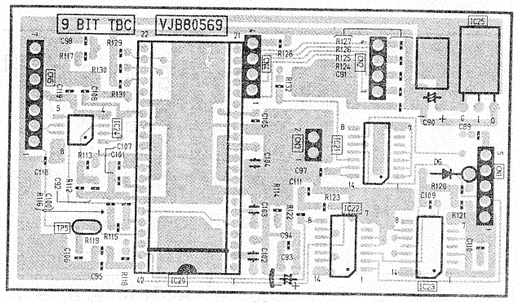

(COMPONENT SIDE)

W2 SUB (SC) P.C.BOARD (VEP80632A)

PAL ONLY

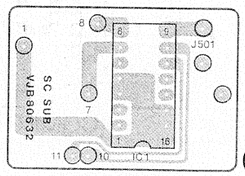

(FOIL SIDE)

P.C. Board Location

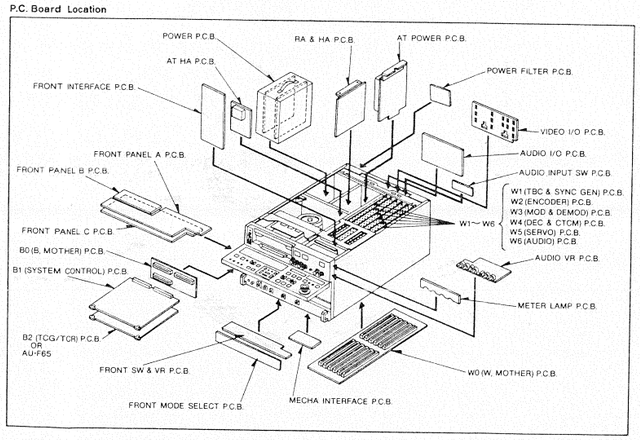

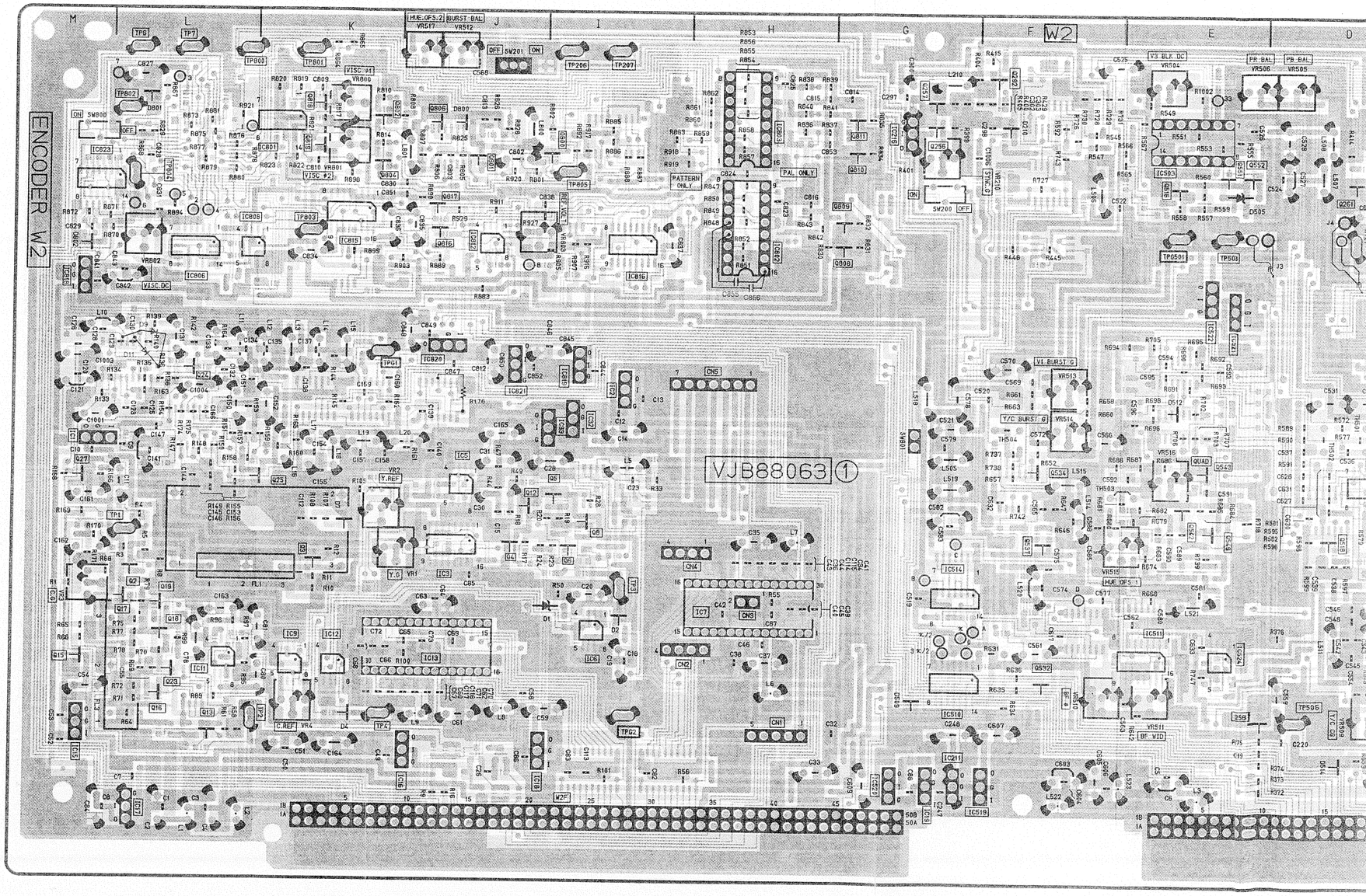

CHIP PART INFORMATION

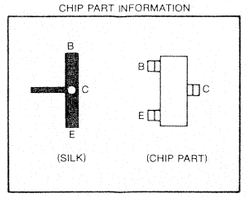

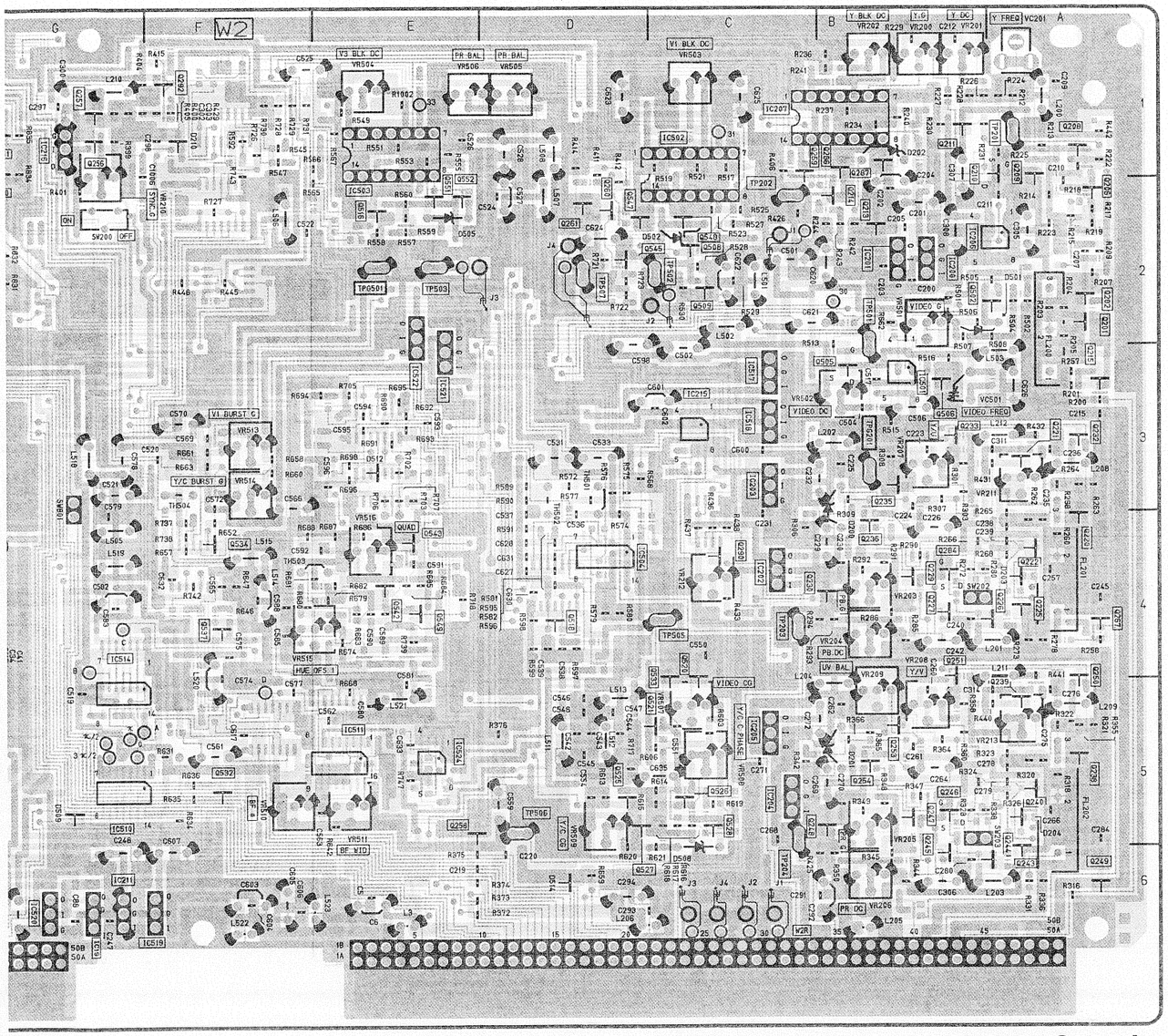

(FOIL SIDE)

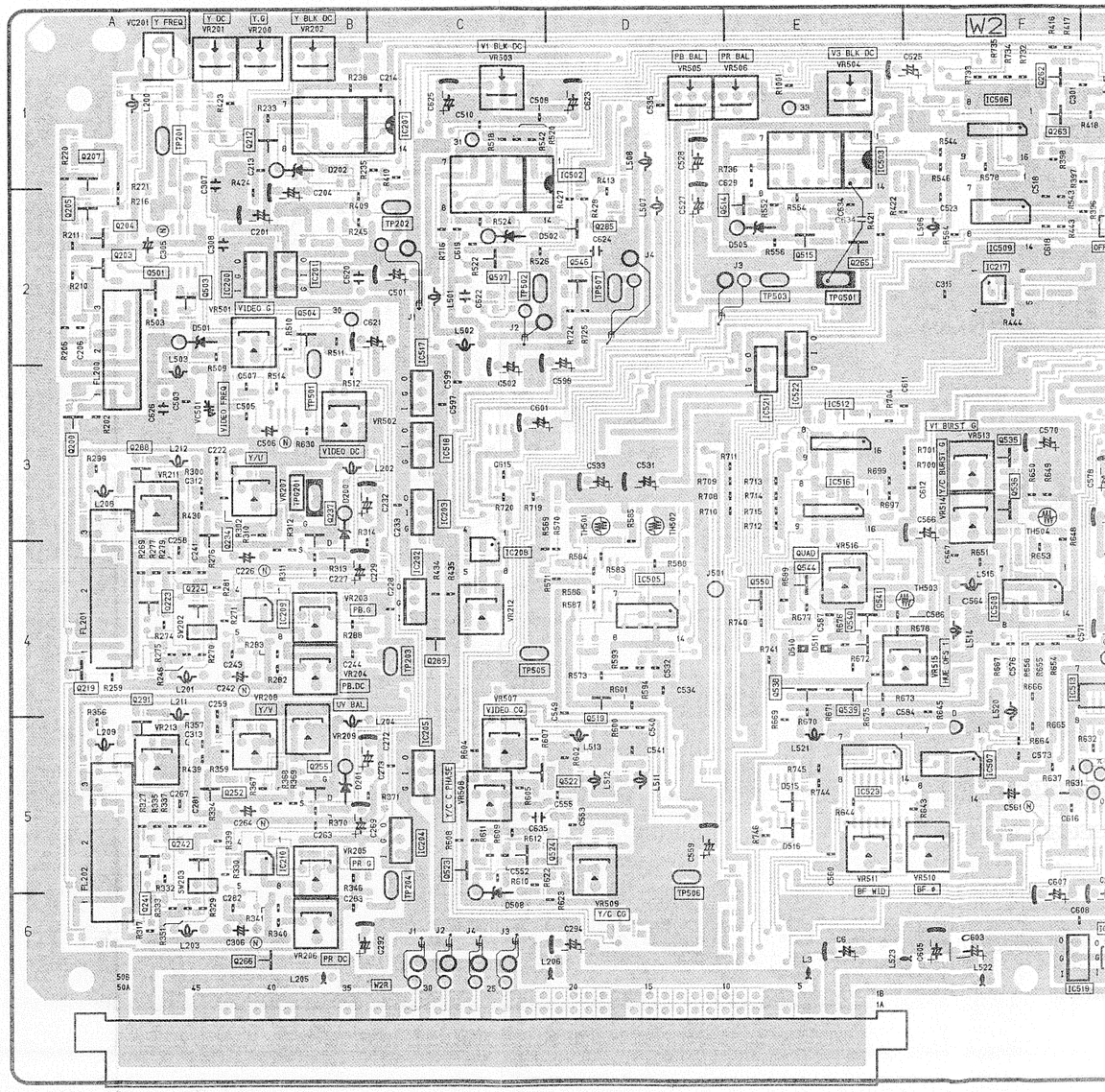

CHIP PART INFORMATION

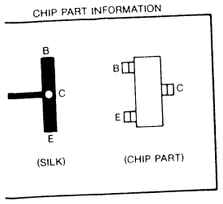

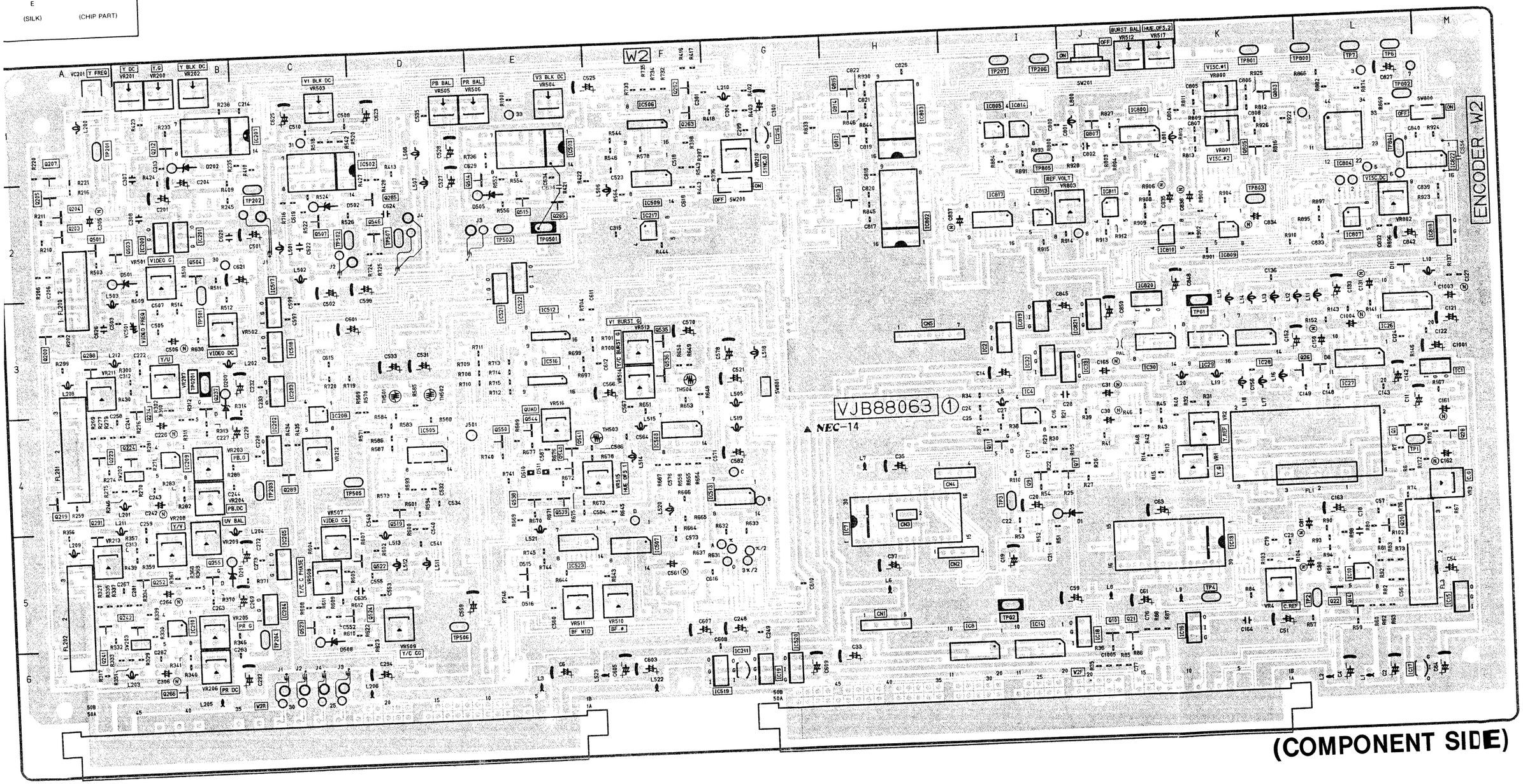

W2 (ENCODER)

COMPONENT SIDE

Transistors

Q1	L-4
Q7	I-4
Q9	I-4
Q10	J-6
Q11	I-4
Q14	L-6
Q20	L-5
Q21	J-6
Q22	L-5
Q26	K-4
Q28	M-4
Q200	A-3
Q203	A-2
Q204	A-2
Q205	A-2
Q207	A-1
Q212	B-1
Q219	A-4
Q223	A-4
Q224	B-4
Q234	B-3
Q237	B-3
Q241	A-5
Q242	B-5
Q252	B-5
Q255	B-5
Q262	F-1
Q263	F-1
Q265	E-1
Q266	B-6
Q285	D-2
Q288	A-3
Q289	C-4
Q291	A-5
Q501	A-2
Q503	A-2
Q504	B-2
Q507	C-2
Q514	E-2
Q515	E-2
Q519	D-4
Q522	C-5
Q523	C-5
Q524	C-5
Q535	F-3
Q536	F-3
Q538	E-4
Q539	E-4
Q540	E-4
Q541	E-4
Q544	E-4
Q546	D-2
Q550	E-4
Q803	K-1
Q807	J-1
Q812	H-1
Q813	H-2
Q814	H-1
Q815	H-1

Integrated Circuits

IC1	M-4
IC2	I-3
IC4	I-4
IC7	H-5
IC8	I-6
IC10	L-5
IC13	K-5
IC14	I-6
IC15	M-6
IC16	J-6
IC17	L-6
IC18	J-6
IC19	G-6
IC26	L-3
IC27	L-3
IC28	K-3
IC29	K-3
IC30	J-3
IC32	I-3
IC33	I-3
IC200	B-2
IC201	B-2
IC202	C-4
IC203	C-3
IC204	C-5
IC205	C-5
IC207	B-1
IC208	C-4
IC209	B-4
IC210	B-5
IC211	G-6
IC216	G-1
IC217	F-2
IC502	C-1
IC503	E-1
IC505	D-4
IC506	F-1
IC507	F-5
IC508	F-4
IC509	F-2
IC512	E-3
IC513	G-4
IC516	E-3
IC517	C-3
IC518	C-3
IC519	F-6
IC520	G-6
IC521	E-3
IC522	E-2
IC823	E-5
IC800	J-1
IC802	H-2
IC803	H-1
IC804	L-1
IC805	I-1
IC807	L-2
IC809	K-2
IC810	J-2
IC811	J-2
IC813	I-2
IC814	I-1
IC817	I-2
IC818	M-2
IC819	I-3
IC820	J-3
IC821	J-3
IC822	M-2

Test Points

TP1	L-4
TP2	K-5
TP3	I-5
TP4	K-5
TP6	L-1
TP7	L-1
TP201	A-1
TP202	C-2
TP203	C-4
TP204	C-5
TP206	I-1
TP207	I-1
TP501	B-3
TP502	C-2
TP503	E-2
TP505	C-4
TP506	D-5
TP507	D-2
TP800	L-1
TP801	K-1
TP802	L-1
TP803	K-2
TP804	L-2
TP805	I-2

TP GND

TPG1	K-3
TPG2	I-5
TPG201	B-3
TPG501	E-2

Adjustments

VR1	K-4
VR2	K-4
VR3	M-5
VR4	K-5
VR200	B-1
VR201	B-1
VR202	B-1
VR203	B-4
VR204	B-4
VR205	B-5
VR206	B-6
VR207	B-3
VR208	B-5
VR209	B-5
VR210	G-1
VR211	A-3
VR212	C-4
VR213	A-5
VR501	B-2
VR502	B-3
VR503	C-1
VR504	E-1
VR505	D-1
VR506	E-1
VR507	C-5
VR508	C-5
VR509	D-5
VR510	F-5
VR511	E-5
VR512	J-1
VR513	F-3
VR514	F-3
VR515	F-4
VR516	E-4
VR517	J-1
VR800	K-1
VR801	K-1
VR802	L-2
VR803	J-2
VR805	K-2

Others

VC201	A-1
VC501	B-3
CN1	H-6
CN2	H-5
CN3	H-5
CN4	H-4
CN5	H-3

FOIL SIDE

Transistor

Q2	L-4
Q3	K-4
Q4	J-4
Q5	I-4
Q6	I-4
Q8	I-4
Q12	J-4
Q13	L-6
Q15	M-5
Q16	L-5
Q17	L-5
Q18	L-5
Q19	L-5
Q23	L-5
Q24	L-3
Q25	K-4
Q27	M-4
Q201	A-2
Q202	A-2
Q206	A-2
Q208	A-1
Q209	A-1
Q210	A-1
Q211	B-1
Q213	B-2
Q214	B-2
Q215	A-3
Q220	A-4
Q221	A-3
Q222	A-4
Q225	A-4
Q226	A-4
Q227	B-4
Q229	B-4
Q230	B-4
Q232	A-3
Q233	B-3
Q235	B-3
Q236	B-4
Q238	A-5
Q239	A-5
Q240	A-5
Q243	A-6
Q244	A-5
Q245	B-6
Q246	B-5
Q247	B-5
Q248	B-5
Q249	A-6
Q250	A-4
Q251	B-4
Q253	B-5
Q254	B-5
Q256	G-1
Q257	G-1
Q258	E-5
Q259	C-1
Q260	D-2
Q261	D-2
Q267	A-4
Q284	B-4
Q286	B-1
Q287	B-1
Q290	C-4
Q292	F-1
Q502	A-2
Q505	B-3
Q506	B-3
Q508	C-2
Q509	C-2
Q516	E-2
Q518	D-4
Q520	C-4
Q521	C-5
Q525	D-5
Q526	C-5
Q527	D-5
Q528	C-5
Q532	F-5
Q533	C-4
Q534	F-4
Q537	F-4
Q542	E-4
Q543	E-4
Q545	D-2
Q547	D-2
Q548	C-2
Q549	E-4
Q551	E-2
Q552	E-2
Q800	I-1
Q801	J-2
Q802	K-1
Q804	K-2
Q806	J-1
Q808	G-2
Q809	G-2
Q810	G-1
Q811	G-1
Q816	J-2
Q817	J-2
Q818	K-1
Q819	K-1

Integrated Circuits

IC3	J-4
IC5	J-4
IC6	I-5
IC9	K-5
IC11	L-5
IC12	K-5
IC206	A-2
IC215	C-3
IC501	B-3
IC504	D-4
IC510	G-5
IC511	E-5
IC514	G-5
IC524	E-5
IC801	K-1
IC806	L-2
IC808	L-2
IC812	J-2
IC815	K-2
IC816	I-2
IC823	M-2

W3 (MOD & DEMOD)

COMPONENT SIDE

Transistors

Q3	C-3
Q4	C-3
Q8	C-3
Q11	C-3
Q12	C-4
Q15	D-2
Q20	B-5
Q208	A-3
Q216	B-6
Q311	H-2
Q315	F-3
Q319	E-1
Q322	H-6
Q323	G-5
Q329	I-2
Q330	J-2
Q332	I-2
Q337	H-4
Q346	J-5
Q350	J-5
Q351	J-6
Q360	I-5
Q366	M-4
Q373	M-1
Q374	L-1
Q375	M-1
Q385	F-1
Q386	J-5
Q718	K-1
Q729	I-4
Q736	K-5
Q739	K-6
Q740	L-5
Q760	I-4
Q762	L-6

Integrated Circuits

IC1	C-2
IC2	C-2
IC3	C-2
IC4	C-2
IC5	C-4
IC6	C-6
IC7	C-5
IC9	D-6
IC10	F-6
IC11	D-2
IC12	D-1
IC13	D-1
IC14	E-1
IC15	M-6
IC16	D-6
IC17	B-6
IC201	B-2
IC203	B-4
IC301	F-4
IC302	F-4
IC303	E-4
IC304	F-4
IC305	G-2
IC306	F-2
IC307	G-1
IC308	G-4
IC309	G-5
IC310	I-2
IC311	I-2
IC312	I-3
IC313	J-3
IC314	J-3
IC315	H-4
IC316	H-5
IC317	I-5
IC319	J-4
IC323	M-3
IC326	E-1
IC701	E-5
IC702	E-5
IC703	D-5
IC704	D-5
IC705	E-4
IC706	E-2
IC707	K-1
IC708	K-2
IC709	L-2
IC710	L-2
IC711	L-3
IC712	I-4
IC716	L-4
IC720	M-5

Test Point

TP1	C-3
TP3	C-3
TP4	C-3
TP5	C-4
TP6	C-5
TP7	B-6
TP8	C-5
TP201	A-2
TP202	B-2
TP203	A-2
TP204	A-4
TP205	B-4
TP206	B-4
TP207	B-6
TP301	F-3
TP302	F-2
TP303	F-4
TP304	H-2
TP305	H-5
TP306	G-5
TP307	I-3
TP308	H-4
TP309	K-5
TP310	J-5
TP311	K-5
TP312	M-3
TP313	M-3
TP315	H-5
TP316	H-2
TP317	L-2
TP701	E-4
TP702	E-3
TP703	L-1
TP704	I-4
TP705	I-5
TP706	L-4
TP707	K-5
TP708	L-6
TP709	M-5
TP710	M-5
TP711	K-1
TP712	L-4

TP GND

TPG1	C-1
TPG2	C-6
TPG201	B-1
TPG202	A-5
TPG301	G-5
TPG302	E-2
TPG303	J-5
TPG701	E-5
TPG702	D-3
TPG703	L-5

Adjustments

VR1	C-1
VR3	C-2
VR4	C-4
VR5	C-4
VR6	C-4
VR7	C-1
VR8	C-4
VR9	C-4
VR10	C-5
VR11	C-5
VR201	B-1
VR202	B-3
VR203	B-3
VR204	B-3
VR205	A-3
VR206	B-3
VR207	B-4
VR208	B-3
VR209	A-4
VR301	F-5
VR302	F-5
VR303	F-5
VR304	F-5
VR305	E-5
VR306	E-5
VR307	F-5
VR308	F-5
VR309	F-3
VR310	F-1
VR311	E-2
VR312	F-1
VR313	J-1
VR314	J-1
VR315	J-1
VR316	J-1
VR317	I-1
VR318	J-2
VR319	J-2
VR320	H-3
VR321	H-3
VR322	I-4
VR323	I-4
VR324	I-5
VR325	I-5
VR326	L-3
VR327	K-1
VR328	M-2
VR329	M-1
VR330	M-1
VR331	M-3
VR701	E-6
VR702	E-6
VR703	D-6
VR704	D-6
VR709	E-3
VR710	G-1
VR711	G-1
VR712	G-1
VR713	H-1
VR714	J-2
VR715	L-1
VR716	K-3
VR717	H-3
VR718	I-3
VR719	K-4
VR720	K-6
VR721	K-5
VR722	L-5
VR723	L-5
VR724	K-1
VR725	M-4
VR726	M-5

Others

VC1	C-5
VC201	B-4
VC301	H-2
VC302	J-5
VC701	K-2

FOIL SIDE

Transistors

Q1	C-1
Q2	C-3
Q5	C-3
Q6	C-3
Q7	B-3
Q9	C-3
Q10	B-3
Q13	C-4
Q14	C-4
Q16	C-5
Q17	C-6
Q18	C-6
Q19	B-5
Q21	C-4
Q201	B-1
Q202	B-2
Q203	B-2
Q204	B-2
Q205	A-3
Q206	B-2
Q207	B-3
Q209	A-3
Q210	B-3
Q211	B-3
Q212	A-3
Q213	B-5
Q214	B-5
Q215	B-5
Q217	B-6
Q218	B-6
Q219	B-5
Q220	B-4
Q301	F-5
Q302	F-5
Q303	F-5
Q304	F-5
Q305	E-5
Q306	E-5
Q307	F-5
Q308	F-5
Q309	F-4
Q310	G-2
Q313	F-3
Q314	F-3
Q316	F-2
Q317	F-2
Q318	E-2
Q320	H-2
Q321	G-4
Q324	I-1
Q326	I-2
Q327	H-2
Q331	I-3
Q333	I-2
Q334	I-2
Q335	I-3
Q336	H-3
Q338	H-5
Q339	I-5
Q340	I-5
Q341	J-3
Q342	J-3
Q343	J-3
Q344	J-5
Q345	J-5
Q347	J-5
Q348	J-5
Q349	J-5
Q352	J-5
Q353	J-5
Q356	I-5
Q357	I-5
Q358	I-5
Q359	I-5
Q361	I-5
Q362	L-3
Q363	M-3
Q364	M-3
Q365	M-4
Q367	M-4
Q368	M-3
Q369	M-2
Q370	M-2
Q371	M-2
Q372	L-2
Q376	J-3
Q377	J-3
Q378	J-3
Q379	K-4
Q380	H-2
Q381	H-2
Q382	H-5
Q383	H-5
Q384	H-5
Q387	J-6
Q388	J-5
Q389	J-6
Q701	E-5
Q702	E-5
Q703	D-5
Q704	D-5
Q705	D-5
Q710	E-4
Q711	D-4
Q712	E-4
Q713	D-4
Q714	E-3
Q715	E-3
Q716	J-2
Q719	K-1
Q721	K-1
Q722	K-2
Q723	K-1
Q724	K-1
Q725	K-2
Q726	L-1
Q727	L-1
Q728	I-3
Q730	I-4
Q731	I-5
Q732	K-4
Q733	K-5
Q734	K-5
Q735	K-5
Q737	L-5
Q738	L-5
Q741	L-6
Q742	L-5
Q745	M-5
Q746	M-5
Q747	L-6
Q748	L-6
Q749	L-6
Q750	L-6
Q751	M-5
Q753	M-4
Q754	K-3
Q755	L-3
Q756	L-3
Q757	L-4
Q758	I-4
Q759	I-4
Q761	L-6
Q763	L-6
Q764	L-6

Integrated Circuits

IC202	A-4
IC322	L-3
IC324	M-2
IC325	M-4
IC719	M-5
IC721	M-4
IC722	M-6

W3 (MOD & DEMOD) P.C.BOARD

TYPE \ MODEL	AU-665	AU-65	AU-63	AU-62
NTSC	VEP83098B	VEP83098A	VEP83098D	VEP83098C
PAL	VEP83098H	VEP83098E	VEP83098F	VEP83098G

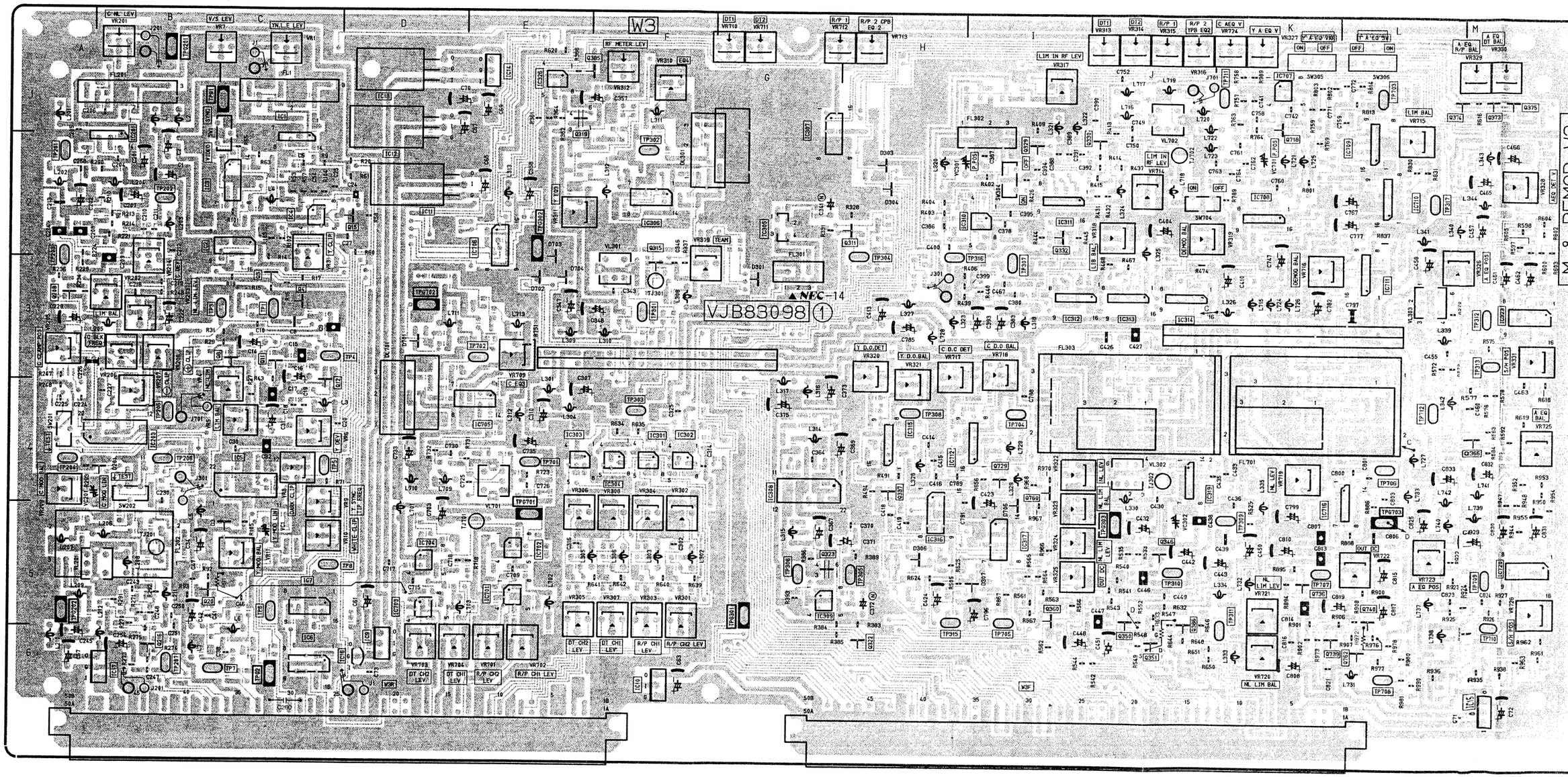

(COMPONENT SIDE)

CHIP PART INFORMATION

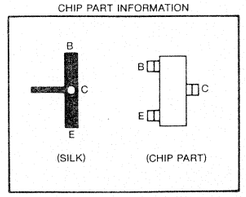

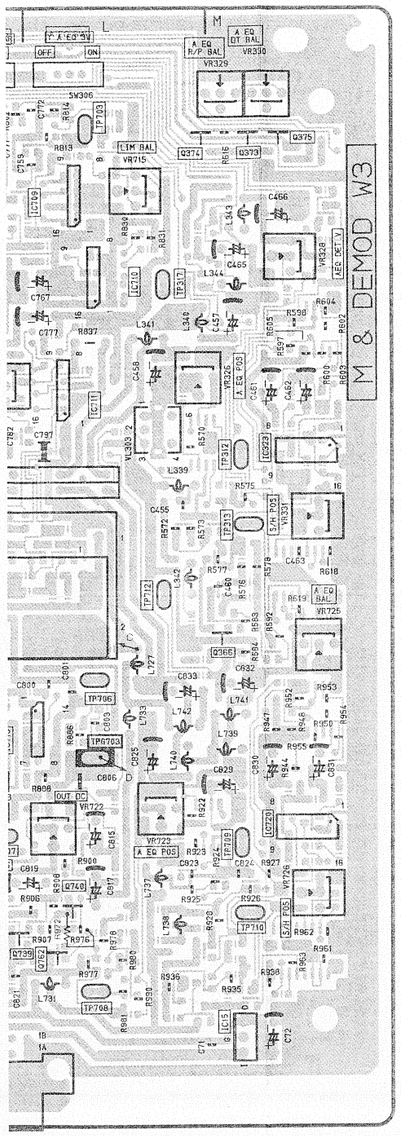

(COMPONENT SIDE)

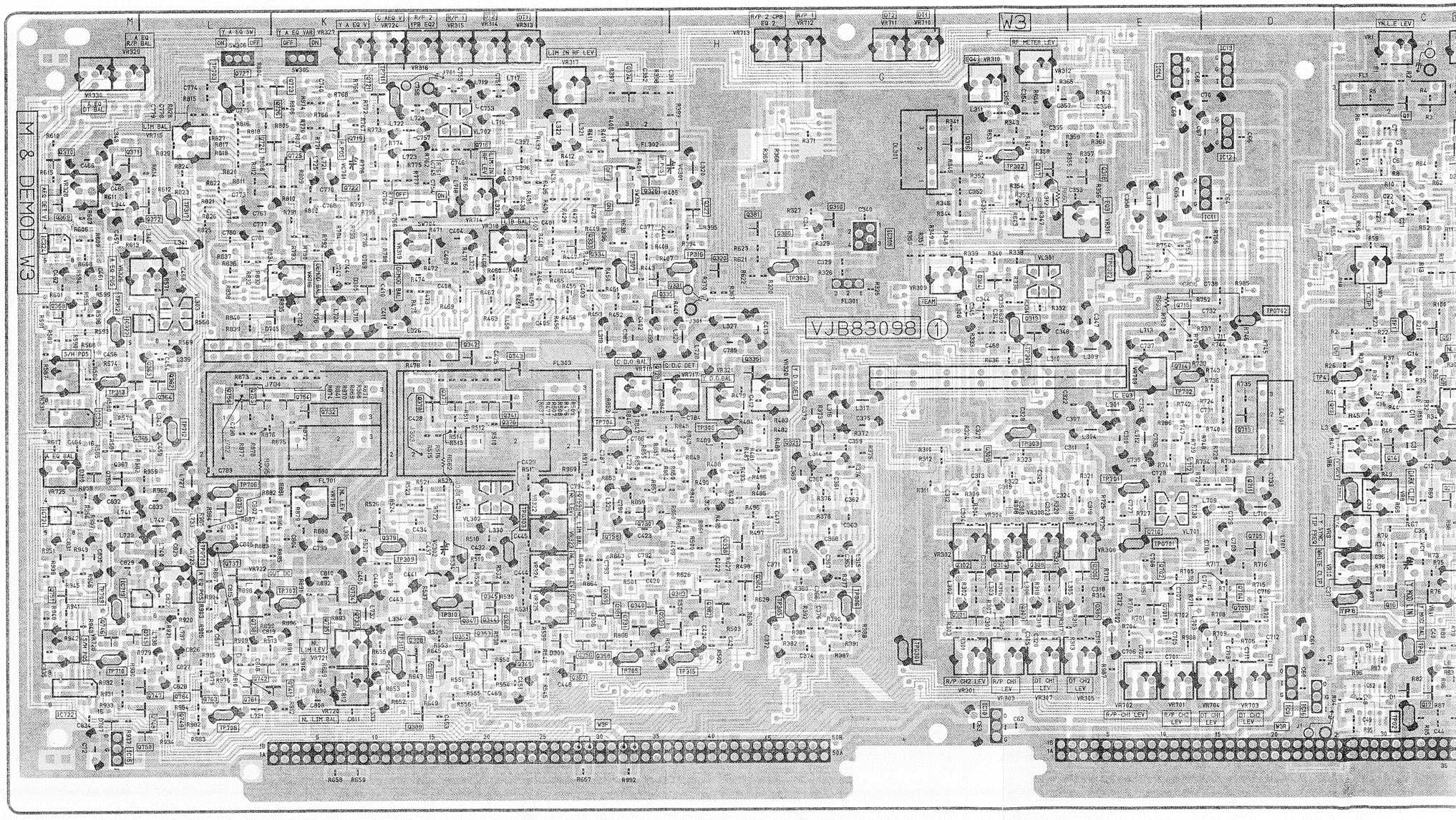

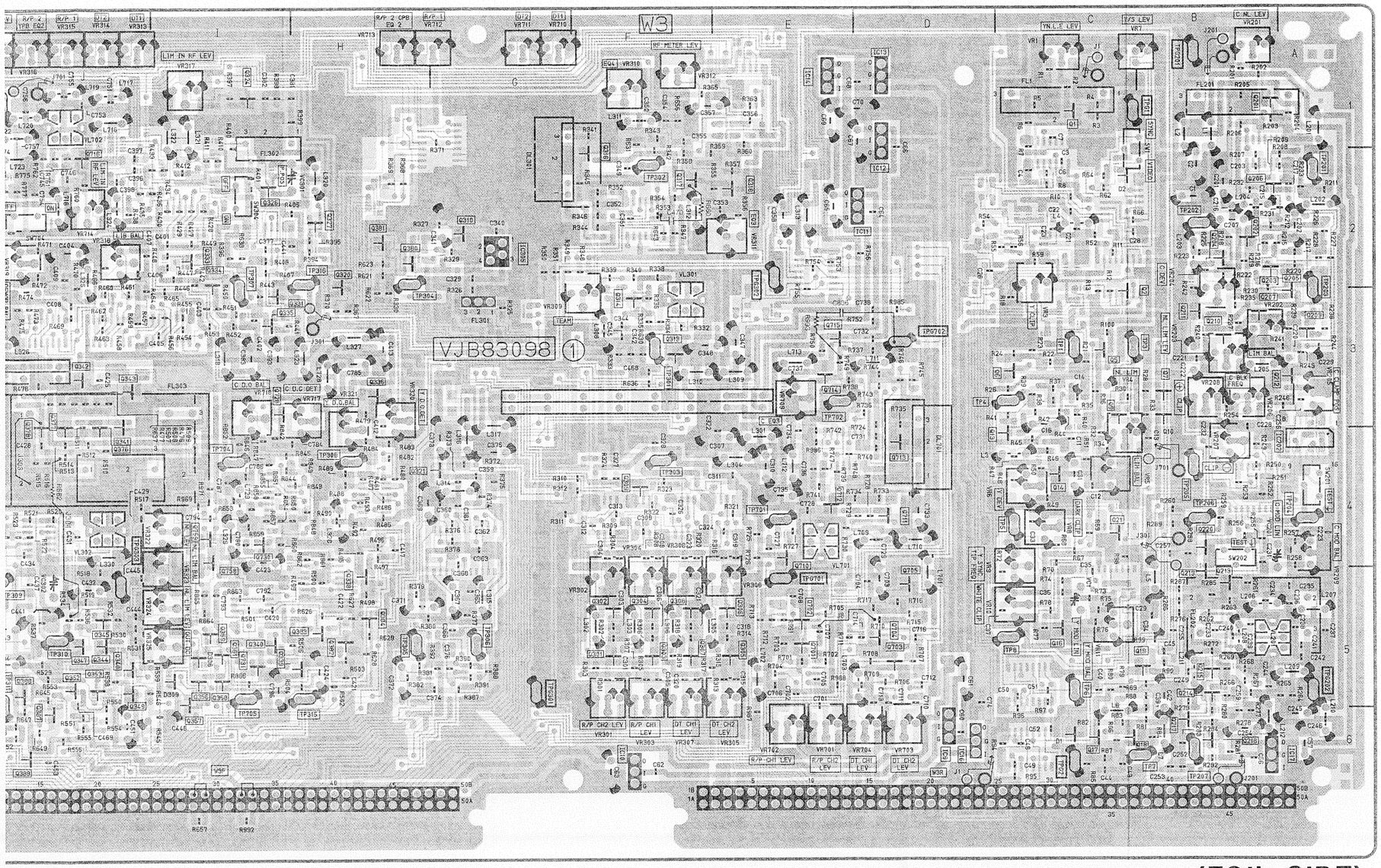

(FOIL SIDE)

W3 SUB P.C.BOARD (VEP80667A)

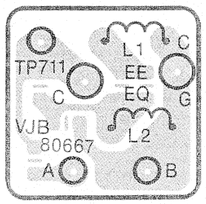

(FOIL SIDE)

AU-65 PAL ONLY

W3 SUB (Y DO BLK) P.C.BOARD (VEP80646A)

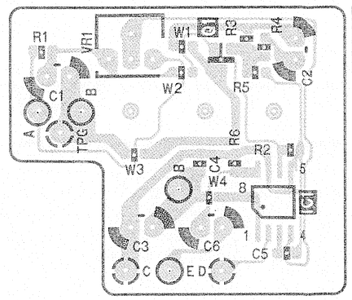

(FOIL SIDE)

AU-665 N ONLY

W3 SUB (C DO BLK) P.C.BOARD (VEP80647A)

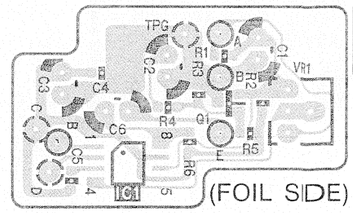

(FOIL SIDE)

AU-665 N ONLY

P.C. Board Location

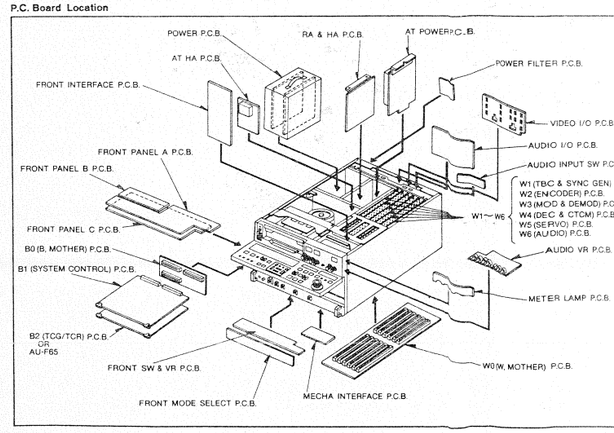

REVERSE SIDE

W4 DECODER & CTCM P.C.BO

W4(DECODER&CTCM)P.C.BOARD

TYPE \ MODEL	AU-665	AU-65	AU-63	AU-62
NTSC	VEP83099A	VEP83099A	Not Used	Not Used
PAL	———	VEP83099B	Not Used	Not Used

P.C. Board Location

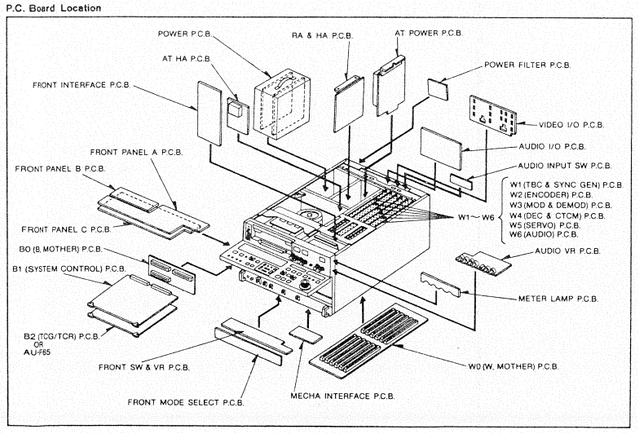

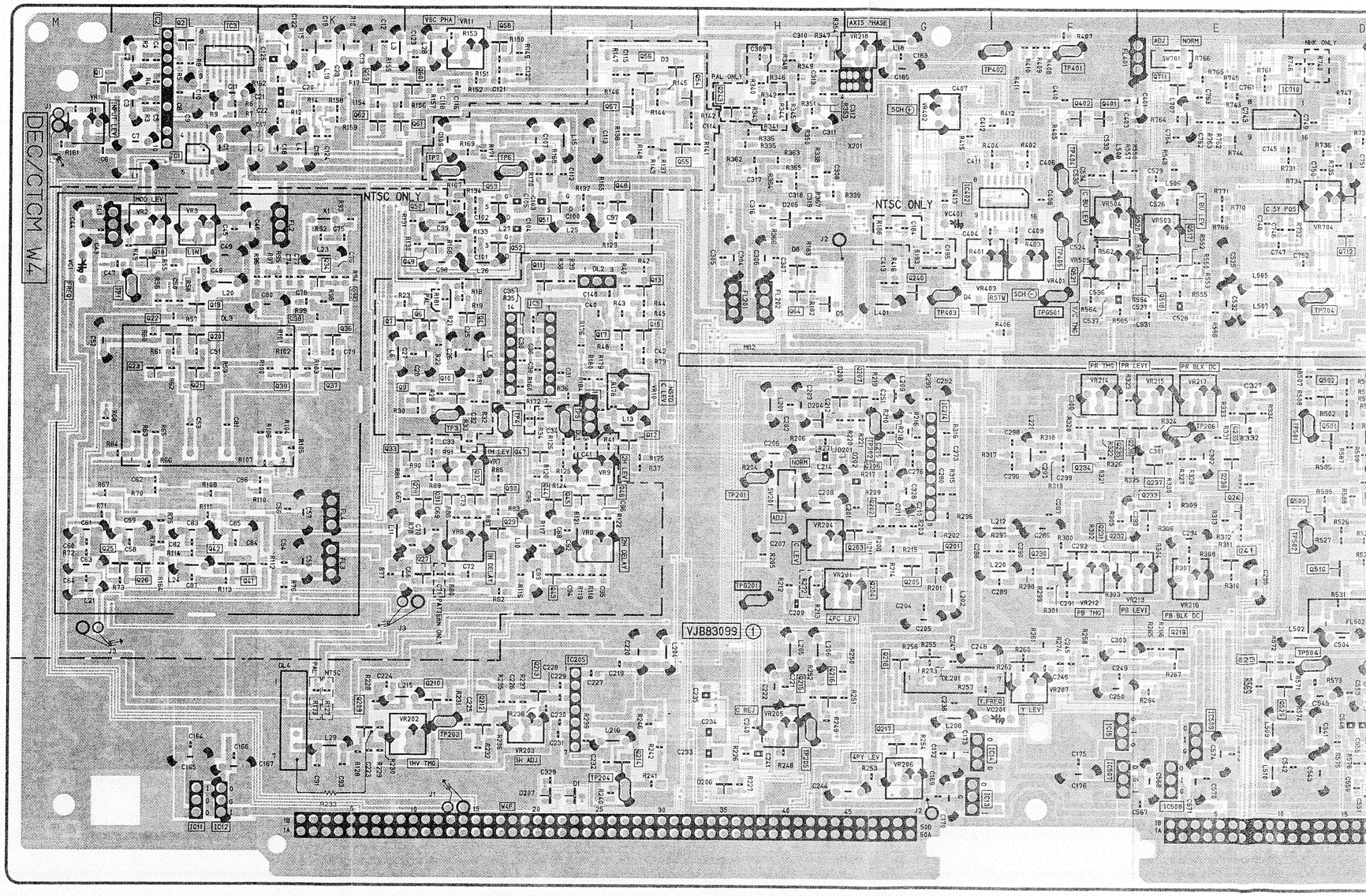

CHIP PART INFORMATION

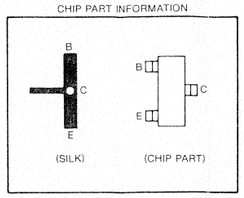

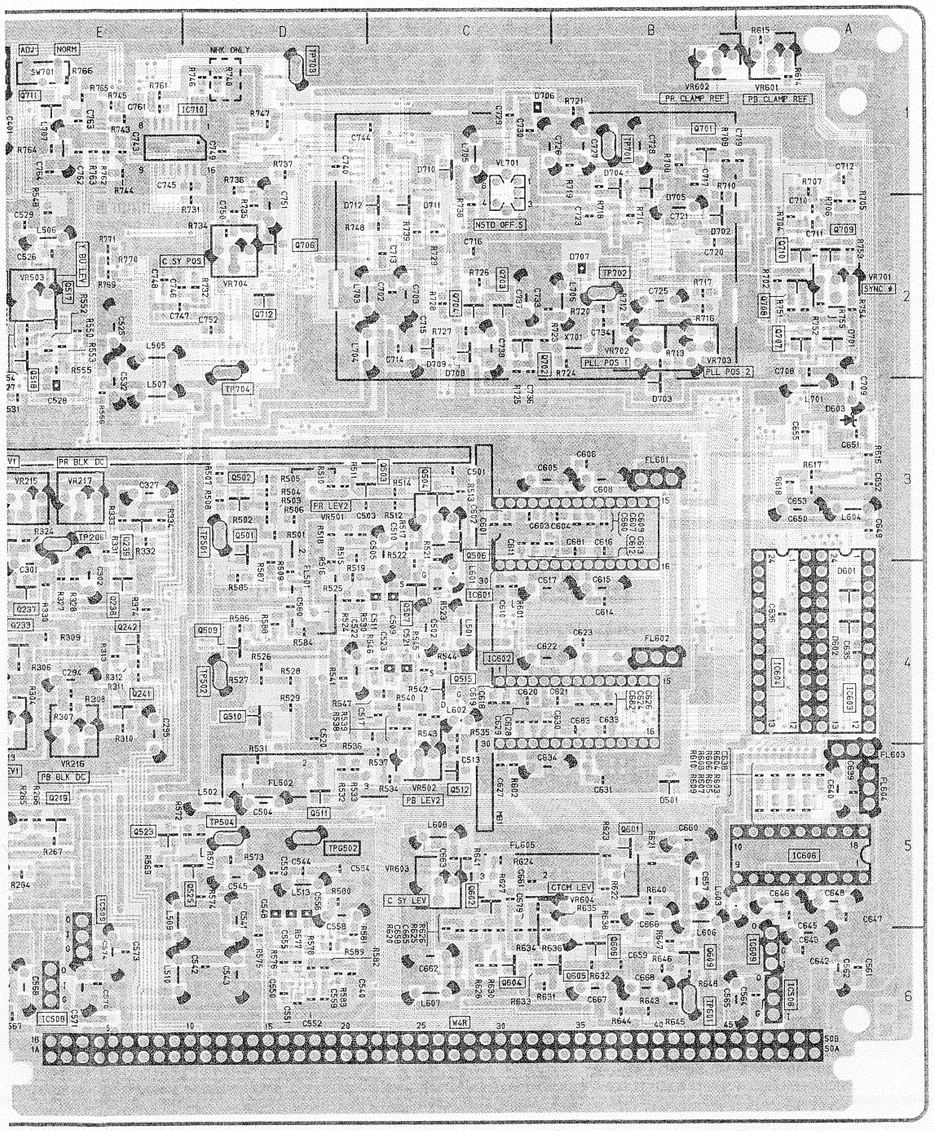

(FOIL SIDE)

CHIP PART INFORMATION

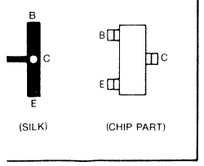

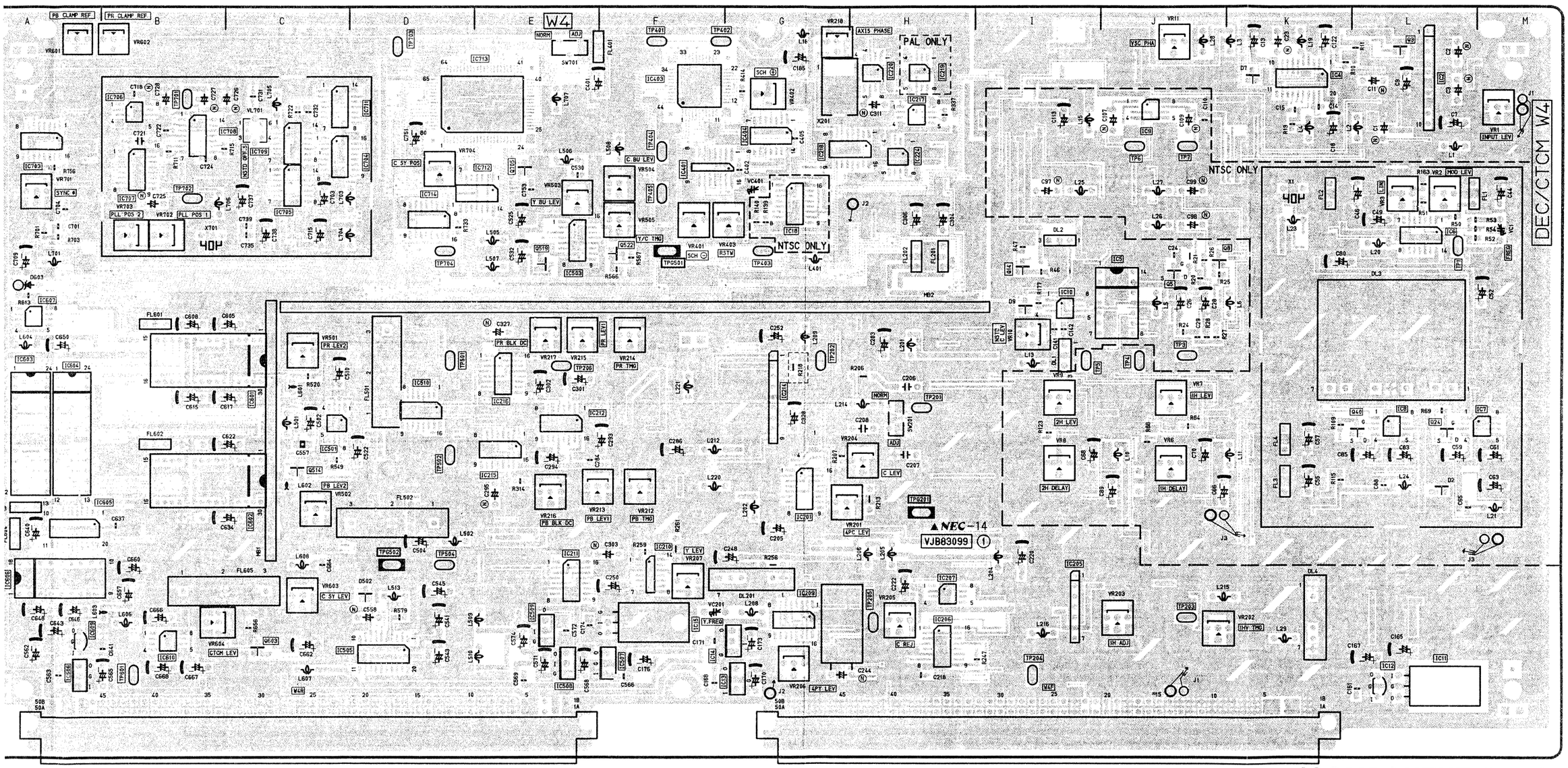

W4 (DEC & CTCM)

COMPONENT SIDE

Transistors

Q3	L-1
Q5	J-3
Q8	J-3
Q14	I-3
Q24	L-4
Q40	L-4
Q514	C-4
Q519	E-3
Q522	F-2
Q603	C-6
Q705	E-2

Integrated Circuits

IC2	L-1
IC4	K-1
IC5	J-3
IC6	L-2
IC7	M-4
IC8	L-4
IC9	J-1
IC10	I-3
IC11	L-6
IC12	L-6
IC13	G-6
IC14	G-6
IC15	F-5
IC18	G-2
IC201	G-4
IC205	I-5
IC206	H-6
IC207	H-5
IC209	G-5
IC210	F-5
IC211	E-5
IC212	E-4
IC214	G-4
IC215	E-4
IC216	E-3
IC217	H-1
IC218	G-2
IC219	H-1
IC220	H-1
IC224	H-2
IC401	F-2
IC403	F-1
IC404	G-2
IC501	C-4
IC503	E-2
IC505	D-6
IC506	A-6
IC507	F-6
IC508	E-6
IC509	E-6
IC510	D-4
IC601	B-3
IC602	B-4
IC603	A-4
IC604	A-4
IC605	A-5
IC606	A-5
IC607	A-3
IC609	A-6
IC610	B-6
IC703	A-2
IC704	C-2
IC705	C-2
IC706	B-1
IC707	B-2
IC708	B-2
IC709	C-2
IC711	C-1
IC712	E-2
IC713	E-1
IC714	D-2

Test Points

TP1	L-2
TP3	J-3
TP4	J-3
TP5	I-3
TP6	J-2
TP7	J-2
TP201	H-4
TP202	G-3
TP203	J-5
TP204	I-6
TP205	H-5
TP206	E-3
TP401	F-1
TP402	F-1
TP403	G-2
TP404	F-2
TP405	F-2
TP501	D-3
TP502	D-4
TP504	D-5
TP601	B-6
TP701	B-1
TP702	B-2
TP703	D-1
TP704	D-2

TP GND

TPG201	H-5
TPG501	F-2
TPG502	D-5

Adjustments

VR1	M-1
VR2	L-2
VR3	L-2
VR6	J-4
VR7	J-4
VR8	I-4
VR9	I-4
VR10	I-3
VR11	J-1
VR201	G-5
VR202	J-6
VR203	J-5
VR204	H-4
VR205	H-5
VR206	G-6
VR207	F-5
VR212	F-4
VR213	E-4
VR214	F-3
VR215	E-3
VR216	E-4
VR217	E-3
VR218	G-1
VR401	F-2
VR402	G-1
VR403	G-2
VR501	C-3
VR502	C-5
VR503	E-2
VR504	F-2
VR505	F-2
VR601	A-1
VR602	B-1
VR603	C-5
VR604	B-5
VR701	A-2
VR702	B-2
VR703	B-2
VR704	D-2

Others

VC1	M-2
VC201	F-5
VC401	G-2

FOIL SIDE

Transistors

Q1	M-1
Q2	L-1
Q4	J-3
Q6	J-3
Q7	J-3
Q9	J-3
Q10	J-3
Q11	J-2
Q12	I-3
Q13	I-2
Q15	I-3
Q17	I-3
Q18	L-2
Q19	L-3
Q20	L-3
Q21	L-3
Q22	L-3
Q23	L-3
Q25	L-4
Q26	L-4
Q27	J-4
Q28	J-4
Q29	J-4
Q30	J-4
Q31	J-4
Q32	J-4
Q33	J-4
Q34	K-2
Q35	K-3
Q36	K-3
Q37	K-3
Q38	K-3
Q39	K-3
Q41	L-4
Q42	L-4
Q43	I-4
Q44	I-4
Q45	I-4
Q46	I-4
Q47	J-4
Q48	I-2
Q49	J-2
Q50	J-2
Q51	I-2
Q52	J-2
Q53	J-2
Q54	I-1
Q55	I-1
Q56	I-1
Q57	I-1
Q58	J-1
Q59	K-1
Q60	J-1
Q61	K-1
Q62	K-1
Q64	H-2
Q201	G-4
Q202	G-4
Q203	G-4
Q204	G-4
Q205	G-4
Q206	G-4
Q207	G-3
Q209	K-5
Q210	J-5
Q212	J-5
Q213	J-5
Q214	I-6
Q215	H-5
Q216	H-5
Q217	G-6
Q218	G-5
Q219	E-5
Q230	F-4
Q231	F-4
Q232	F-4
Q233	E-4
Q234	F-4
Q235	F-3
Q236	E-3
Q237	E-4
Q238	E-4
Q239	E-3
Q240	G-2
Q241	E-4
Q242	E-4
Q243	H-1
Q401	F-1
Q402	F-1
Q501	D-3
Q502	D-3
Q503	D-3
Q504	C-3
Q506	C-3
Q507	C-4
Q509	D-4
Q510	D-4
Q511	D-5
Q512	C-5
Q515	C-4
Q517	E-2
Q518	E-2
Q520	F-2
Q521	F-2
Q523	E-5
Q525	D-5
Q601	B-5
Q602	C-5
Q604	C-6
Q605	B-6
Q606	B-6
Q609	B-6
Q701	B-1
Q702	C-2
Q703	C-2
Q704	C-2
Q706	D-2
Q707	A-2
Q708	A-2
Q709	A-2
Q710	A-2
Q711	E-1
Q712	D-2

Integrated Circuits

IC1	L-2
IC3	L-1
IC402	F-2
IC710	E-1

W5 (SERVO)

COMPONENT SIDE

Transistors

Q1	E-1
Q3	D-1
Q4	F-1
Q9	F-5
Q15	F-5
Q18	D-6
Q103	H-4
Q107	K-4
Q108	K-4
Q109	K-4
Q110	K-4
Q111	I-4
Q114	I-4
Q116	K-4
Q120	A-5
Q122	A-5
Q123	A-5
Q124	A-5
Q125	B-6
Q126	B-6
Q127	A-6
Q136	B-6
Q305	L-1
Q306	L-1
Q312	L-5
Q313	L-5
Q314	L-4
Q316	L-4
Q317	M-4
Q320	L-3
Q323	L-3
Q336	L-4
Q337	L-5
Q338	L-3
Q345	L-4
Q346	M-1
Q347	M-2
Q501	I-6
Q502	I-6
Q503	K-5
Q504	J-6
Q505	L-5
Q507	K-5
Q602	F-4
Q603	F-4
Q604	F-4
Q605	F-4
Q702	A-4
Q703	A-4
Q704	A-4
Q705	A-4
Q706	A-4
Q707	A-4
Q708	A-4
Q709	A-3
Q710	A-3
Q711	B-3

Integrated Circuits

IC6	I-2
IC7	H-2
IC8	G-3
IC11	E-6
IC12	I-2
IC13	H-2
IC14	H-3
IC15	H-2
IC16	H-3
IC17	D-5
IC18	E-2
IC19	D-6
IC103	H-4
IC105	E-6
IC106	K-6
IC107	J-2
IC109	J-3
IC110	K-3
IC111	J-2
IC113	J-4
IC114	J-4
IC115	J-4
IC116	K-4
IC117	K-4
IC118	I-4
IC121	K-4
IC122	B-5
IC124	K-3
IC125	C-3
IC133	K-1
IC135	L-2
IC301	E-5
IC304	M-1
IC314	L-3
IC318	K-3
IC319	L-2
IC320	L-4
IC501	G-5
IC502	H-5
IC503	I-5
IC504	I-5
IC505	K-5
IC506	J-5
IC507	G-4
IC601	E-2
IC700	C-2
IC702	C-2
IC706	A-2
IC707	B-1
IC708	C-2
IC710	E-1
IC711	B-3
IC712	B-3
IC721	E-6
IC722	F-6
IC723	A-5
IC724	E-5
IC725	C-4
IC726	B-4

Test Points

TP1	F-5
TP2	F-4
TP3	F-1
TP4	F-3
TP5	G-2
TP6	I-1
TP7	I-1
TP8	G-4
TP9	F-2
TP10	I-1
TP11	H-1
TP12	G-1
TP13	G-1
TP14	G-2
TP15	F-1
TP16	H-1
TP17	I-2
TP18	F-2
TP19	L-6
TP20	H-2
TP101	J-2
TP102	J-1
TP103	K-2
TP104	G-2
TP105	G-2
TP106	I-3
TP107	H-3
TP108	I-4
TP109	B-5
TP110	B-5
TP111	H-3
TP112	H-4
TP113	H-4
TP114	E-3
TP115	E-3
TP116	E-5
TP117	F-4
TP118	H-4
TP201	E-5
TP202	F-5
TP203	E-4
TP204	F-3
TP302	L-2
TP303	L-6
TP304	L-5
TP306	M-5
TP309	L-5
TP310	M-2
TP311	M-5
TP312	L-3
TP700	C-2
TP701	C-1
TP702	D-2
TP703	B-3
TP704	D-3
TP705	D-4
TP706	C-3
TP707	D-4
TP708	D-3
TP709	D-2
TP710	D-1
TP711	C-4
TP712	C-4
TP713	C-5
TP714	E-4

TP GND

TPG1	G-3
TPG2	F-4
TPG3	D-1

Adjustments

VR1	J-3
VR3	D-4
VR101	I-4
VR102	H-4
VR103	J-4
VR104	J-4
VR105	J-4
VR301	M-2
VR302	L-6
VR303	L-6
VR304	M-5
VR305	M-5
VR306	L-5
VR308	L-3
VR309	L-1
VR600	D-4
VR700	C-3
VR701	C-1
VR702	C-1
VR703	B-1
VR704	C-1
VR705	C-1
VR706	D-1
VR707	C-1
VR708	C-5
VR709	B-5

FOIL SIDE

Transistors

Q2	I-1
Q5	F-5
Q6	F-4
Q7	F-5
Q8	F-6
Q10	F-6
Q11	F-5
Q12	F-4
Q13	F-4
Q14	F-5
Q16	F-5
Q17	F-5
Q101	B-5
Q102	H-4
Q104	H-3
Q105	J-3
Q106	J-2
Q112	I-4
Q113	I-4
Q115	J-4
Q117	K-4
Q118	L-4
Q119	L-4
Q121	A-5
Q128	G-2
Q129	D-4
Q130	B-4
Q131	C-3
Q132	I-4
Q133	H-4
Q134	J-4
Q135	I-4
Q137	H-5
Q138	L-2
Q139	L-2
Q301	M-2
Q302	M-1
Q303	L-1
Q304	L-1
Q307	M-2
Q308	M-2
Q309	M-3
Q319	M-4
Q340	K-3
Q343	K-3
Q344	K-2
Q506	L-5
Q508	K-5
Q509	I-4
Q600	D-4
Q601	D-4
Q606	F-1
Q700	A-1
Q701	A-3

Integrated Circuits

IC1	C-6
IC2	C-5
IC3	J-1
IC4	G-4
IC5	C-5
IC9	J-2
IC10	J-2
IC101	C-5
IC102	C-5
IC104	I-3
IC108	K-3
IC112	I-3
IC119	K-4
IC120	K-4
IC123	B-5
IC126	B-4
IC128	B-4
IC129	A-4
IC130	H-4
IC131	B-5
IC132	B-5
IC134	L-1
IC136	B-3
IC137	D-3
IC302	M-3
IC303	L-2
IC305	L-1
IC306	L-6
IC307	L-6
IC308	L-4
IC309	M-4
IC310	L-5
IC311	L-5
IC312	L-4
IC313	M-4
IC315	L-3
IC316	M-3
IC600	I-3
IC701	C-2
IC703	C-2
IC704	B-1
IC705	A-1
IC709	B-1
IC713	C-3
IC714	C-4
IC715	C-4
IC716	D-3
IC717	D-2
IC718	D-4
IC719	D-4
IC720	D-2
IC727	B-4
IC800	J-4

W5(SERVO)P.C.BOARD

TYPE \ MODEL	AU-665	AU-65	AU-63	AU-62
NTSC	VEP82061B	VEP82061A	VEP82061D	VEP82061C
PAL	VEP82061G	VEP82061E	VEP82061F	VEP82061E

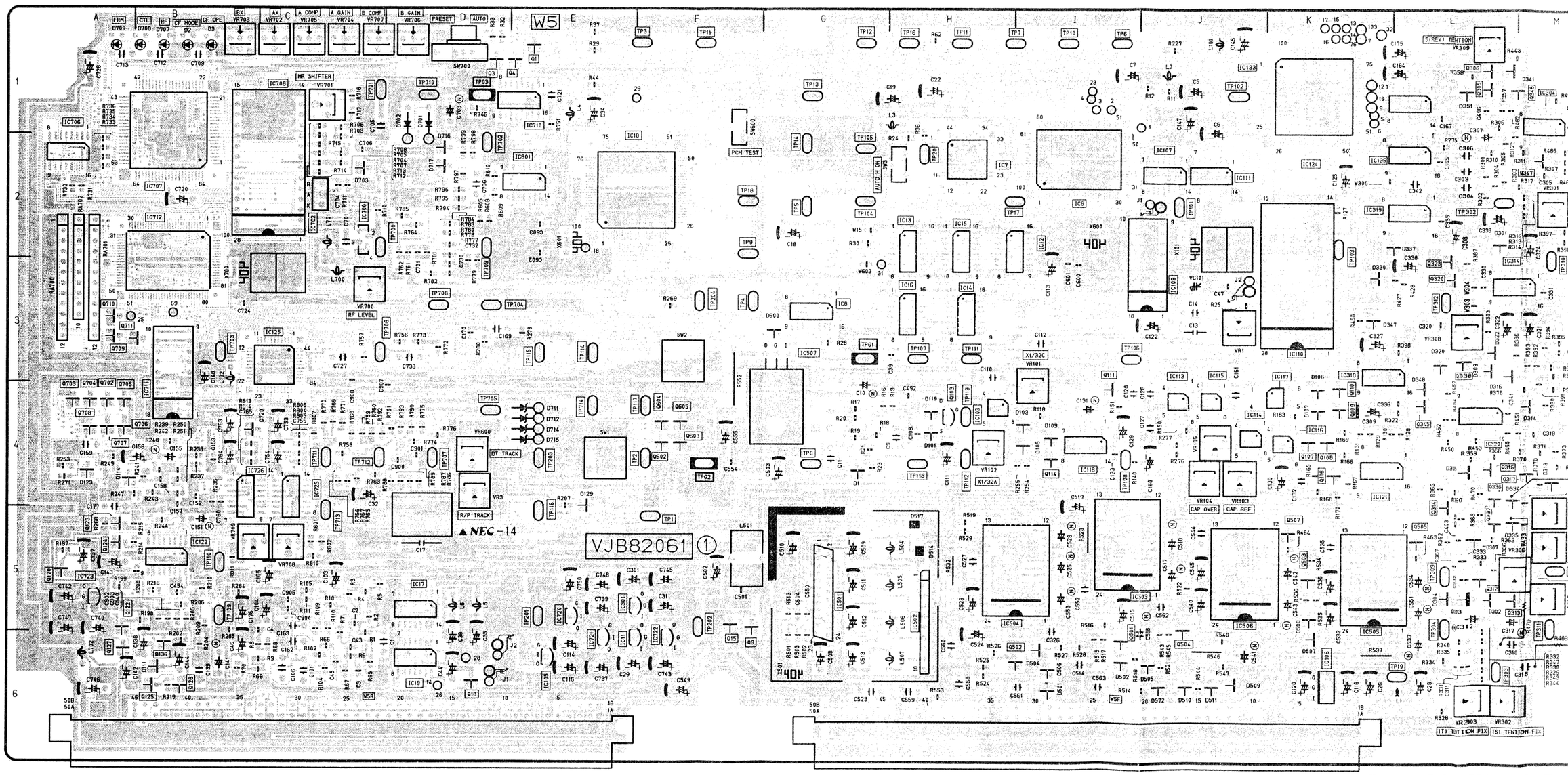

CHIP PART INFORMATION

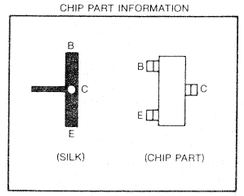

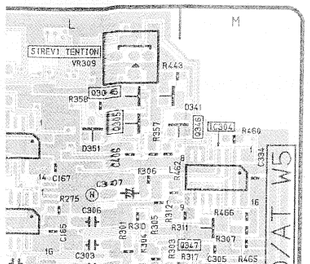

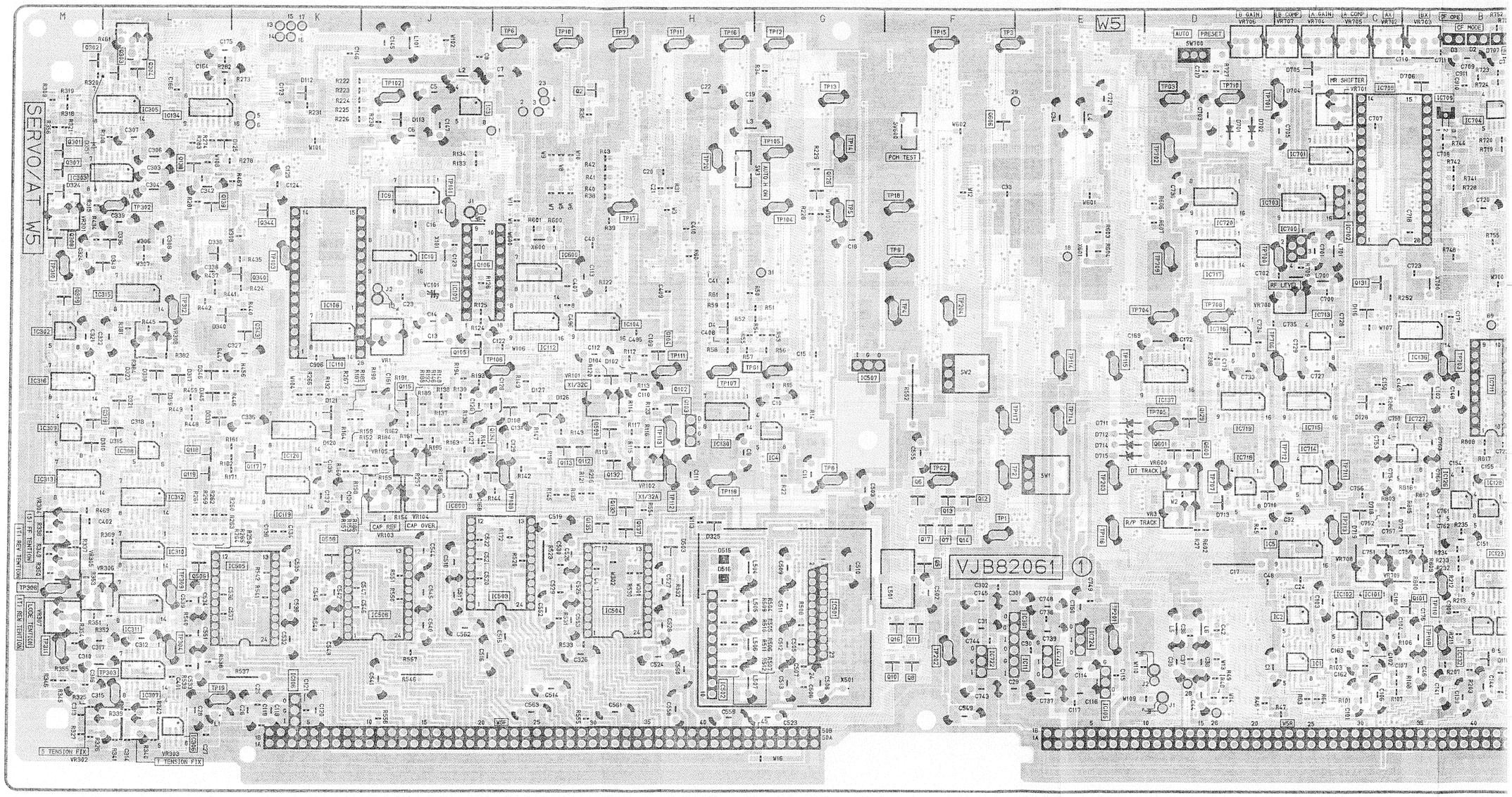

PONENT SIDE)

(

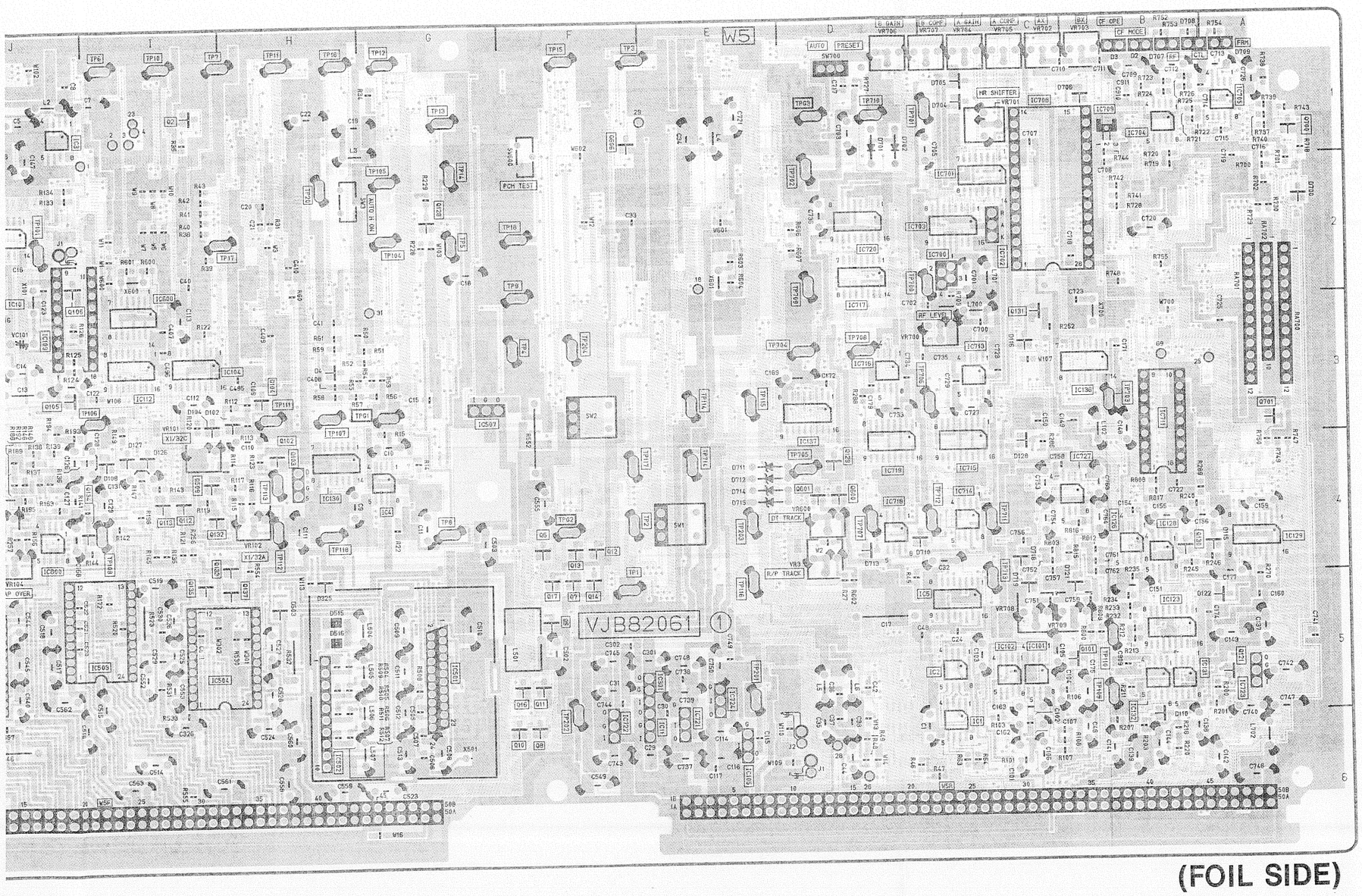

P.C. Board Location

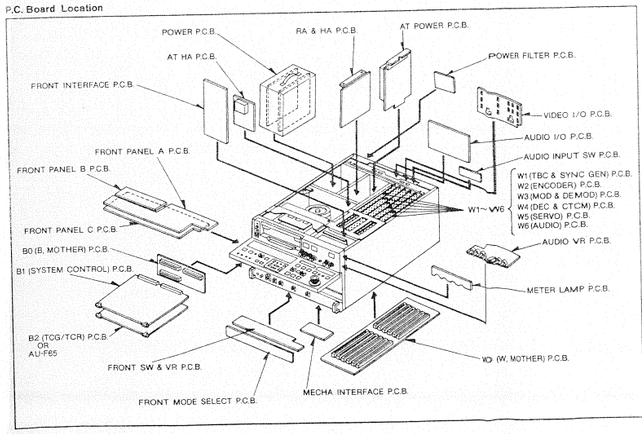

REVERSE SIDE
W6 AUDIO P.C.BOA

W6(AUDIO)P.C.BOARD

TYPE \ MODEL	AU-665	AU-65	AU-63	AU-62
NTSC	VEP84095B	VEP84095A	VEP84095C	VEP84095C
PAL	VEP84095F	VEP84095D	VEP84095E	VEP84095E

W6 SUB(TC TRAP)P.C.BOARD (VEP80635A)

AU-65/665 ONLY

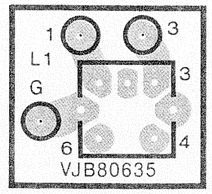

(COMPONENT SIDE)

W6 SUB(SPOT ERASE)P.C.BOARD (VEP80664A)

AU-665 PAL ONLY

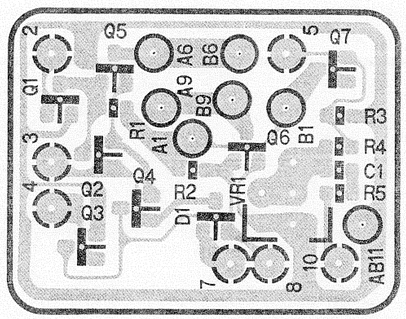

(FOIL SIDE)

P.C. Board Location

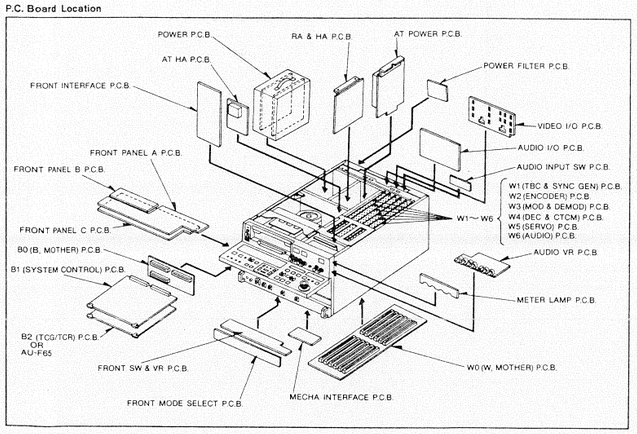

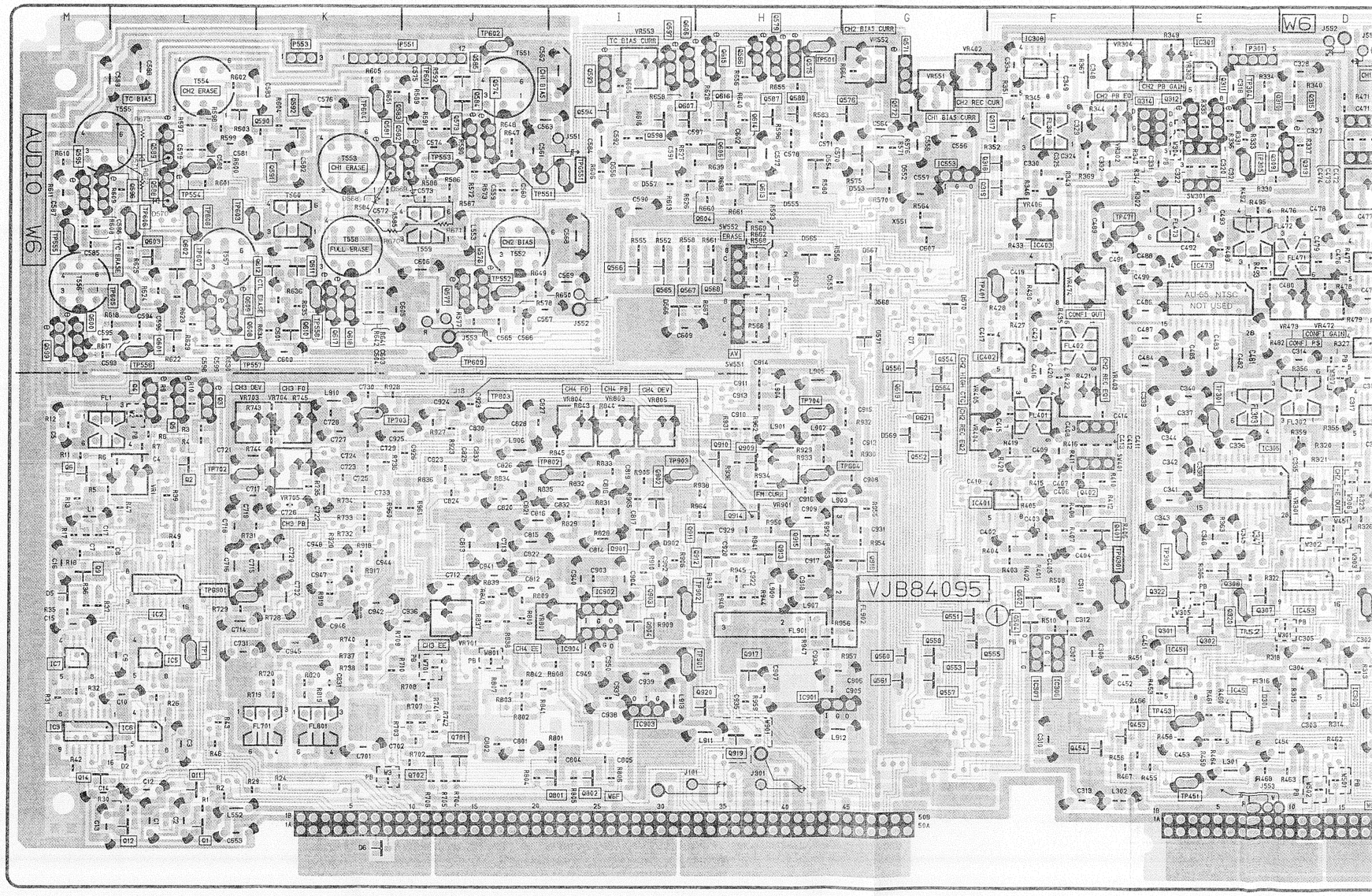

CHIP PART INFORMATION

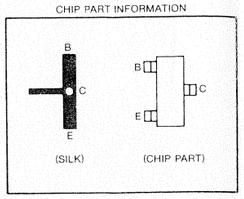

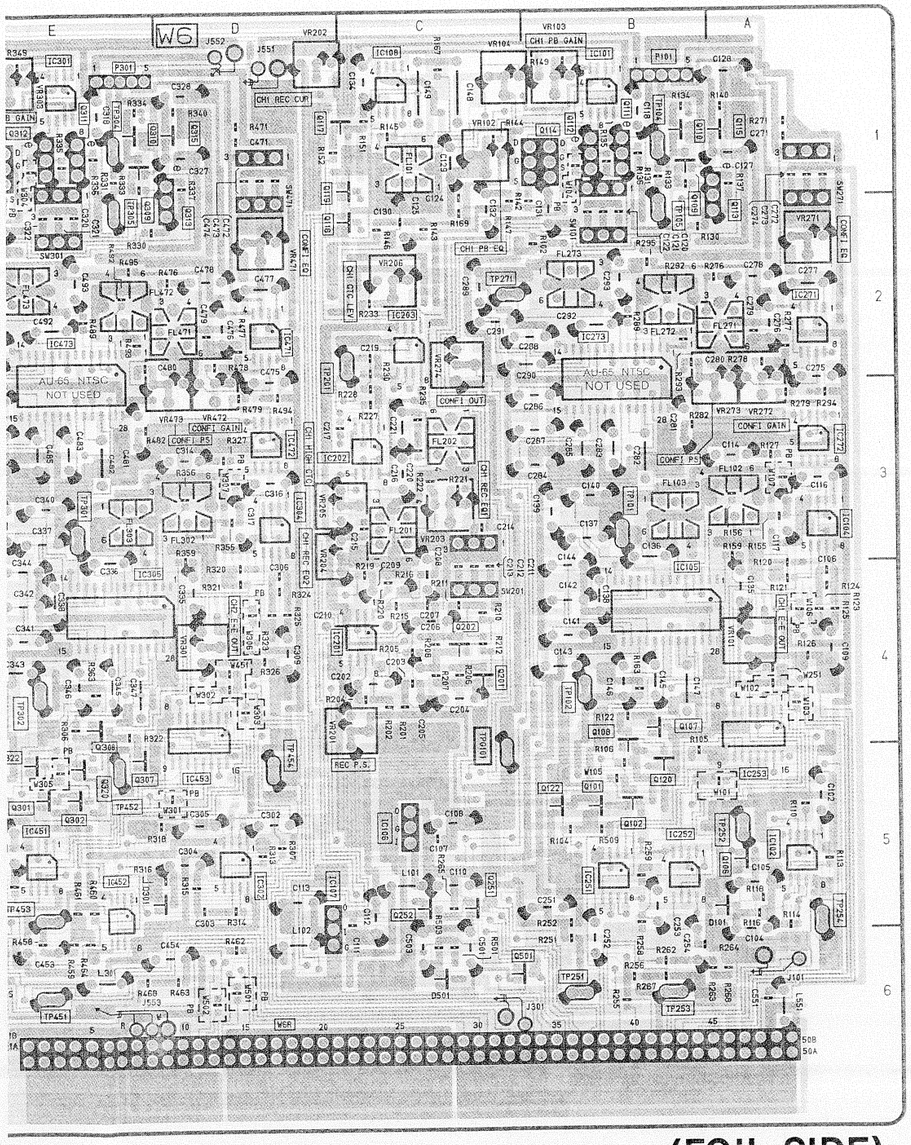

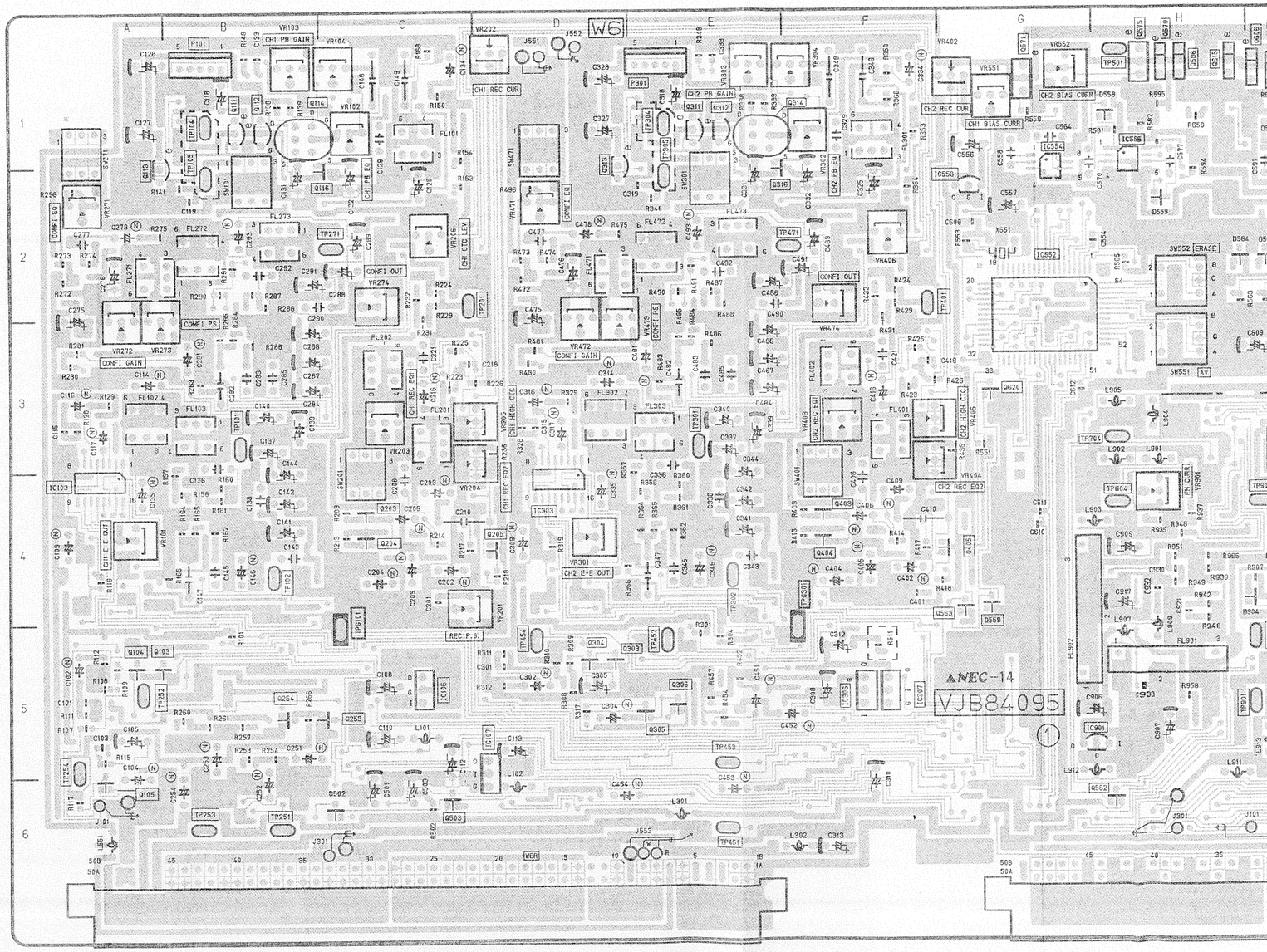

(FOIL SIDE)

CHIP PART INFORMATION

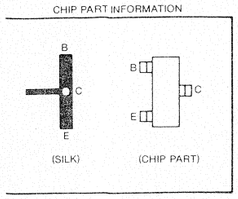

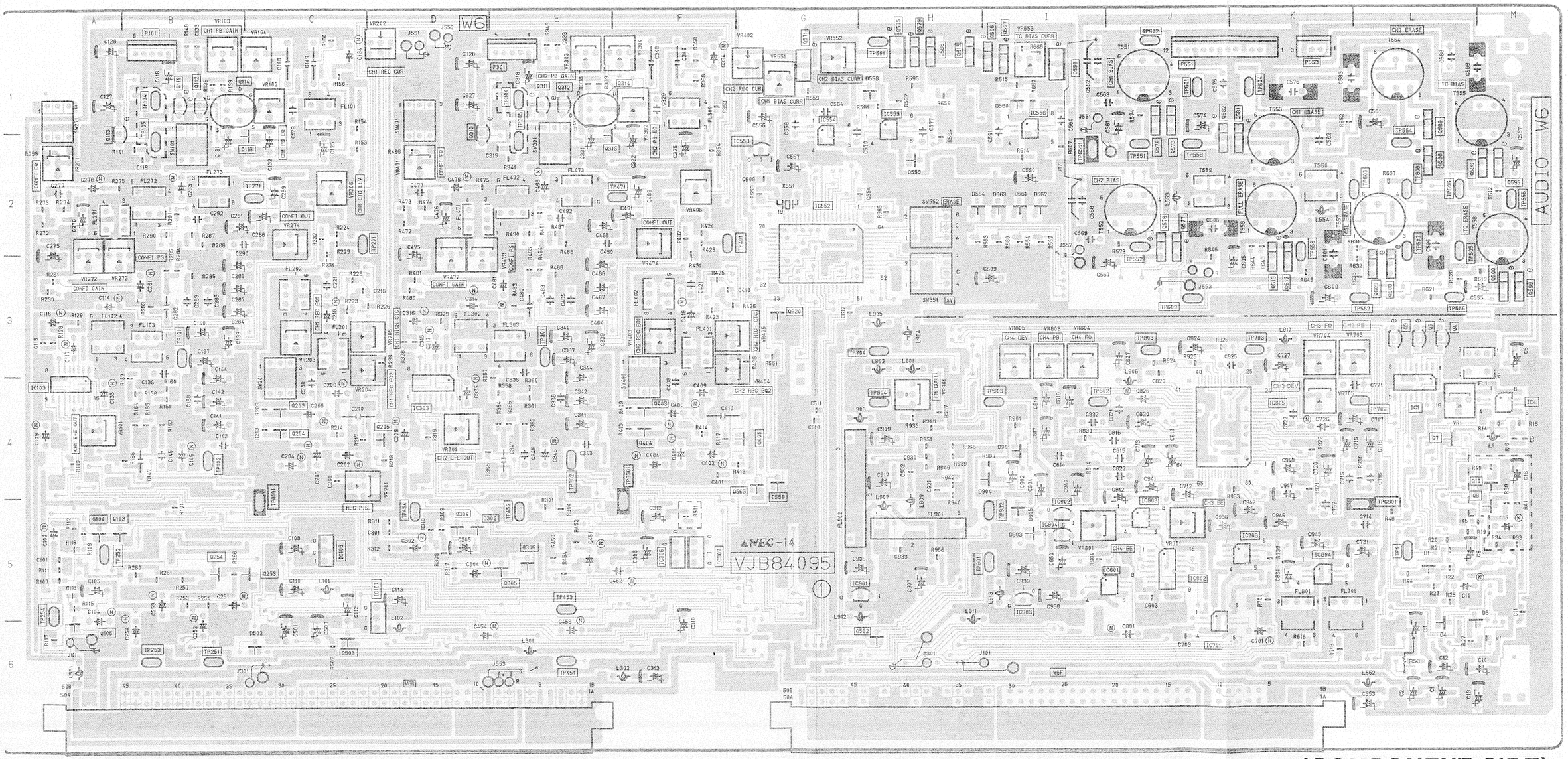

(COMPONENT SIDE)

W6 (AUDIO)

COMPONENT SIDE

Transistors

Q3	L-3
Q4	L-3
Q5	L-3
Q7	L-4
Q8	M-5
Q10	M-4
Q13	A-5
Q103	A-5
Q104	A-5
Q105	A-6
Q111	B-1
Q112	B-1
Q113	A-2
Q114	B-1
Q116	C-2
Q203	C-4
Q204	C-4
Q205	D-4
Q253	C-5
Q254	B-5
Q303	D-5
Q304	D-5
Q305	E-5
Q306	E-5
Q311	E-1
Q312	E-1
Q313	D-1
Q314	E-1
Q316	E-2
Q403	F-4
Q404	F-4
Q405	G-4
Q503	C-6
Q559	G-4
Q562	H-6
Q563	G-4
Q571	G-1
Q573	J-1
Q574	J-1
Q575	H-1
Q577	J-2
Q578	J-2
Q579	H-1
Q581	K-2
Q582	J-2
Q586	H-1
Q588	L-2
Q589	L-1
Q593	I-1
Q595	M-2
Q596	M-2
Q597	I-1
Q599	M-3
Q600	M-3
Q606	I-1
Q608	L-3
Q609	L-3
Q615	H-1
Q617	K-3
Q618	K-3
Q620	G-3

Integrated Circuits

IC1	L-4
IC4	M-4
IC103	A-4
IC106	C-5
IC107	D-5
IC303	D-4
IC306	F-5
IC307	F-5
IC552	G-2
IC553	G-2
IC554	G-2
IC555	H-1
IC556	I-1
IC701	J-6
IC703	K-5
IC801	J-5
IC802	J-5
IC803	J-5
IC804	K-5
IC805	K-4
IC901	H-5
IC902	I-5
IC903	I-5
IC904	I-5

Test Pints

TP1	L-5
TP101	B-3
TP102	B-4
TP104	B-1
TP105	B-2
TP201	C-2
TP251	B-6
TP252	A-5
TP253	B-6
TP254	A-5
TP271	C-2
TP301	E-3
TP302	E-4
TP304	E-1
TP305	E-2
TP401	F-2
TP451	E-6
TP452	E-5
TP453	E-5
TP454	D-5
TP471	F-2
TP501	H-1
TP551	J-2
TP552	J-2
TP553	J-2
TP554	L-2
TP555	M-2
TP556	L-3
TP557	L-3
TP558	K-2
TP601	J-1
TP602	J-1
TP603	L-2
TP604	K-1
TP605	L-3
TP606	L-2
TP607	L-2
TP608	L-2
TP609	J-3
TP702	L-4
TP703	K-3
TP704	H-3
TP802	I-4
TP803	J-3
TP804	H-4
TP901	I-5
TP902	I-5
TP903	I-4

TP GND

TPG101	C-5
TPG301	F-5
TPG551	I-2
TPG901	L-5

Adjustments

VR1	L-4
VR101	A-4
VR102	C-1
VR103	B-1
VR104	C-1
VR201	C-4
VR202	D-1
VR203	C-3
VR204	C-3
VR205	C-3
VR206	C-2
VR271	A-2
VR272	A-3
VR273	A-3
VR274	C-2
VR301	D-4
VR302	F-1
VR303	E-1
VR304	F-1
VR402	G-1
VR403	F-3
VR404	F-3
VR405	G-3
VR406	F-2
VR471	D-2
VR472	D-3
VR473	D-3
VR474	F-2
VR551	G-1
VR552	G-1
VR553	I-1
VR701	J-5
VR703	K-3
VR704	K-3
VR705	K-4
VR801	I-5
VR803	I-3
VR804	I-3
VR805	I-3
VR901	H-4

Others

P101	B-1
P301	E-1
P551	J-1
P553	K-1

FOIL SIDE

Transistors

Q1	L-6
Q2	L-4
Q6	M-4
Q9	M-4
Q11	L-6
Q12	L-6
Q101	B-5
Q102	B-5
Q106	A-5
Q107	B-4
Q108	B-4
Q109	B-1
Q110	B-1
Q115	A-1
Q117	C-1
Q118	C-2
Q119	C-1
Q120	B-5
Q122	B-5
Q201	C-4
Q202	C-4
Q251	C-5
Q252	C-5
Q301	E-5
Q302	E-5
Q307	E-5
Q308	E-4
Q309	E-1
Q310	E-1
Q315	D-1
Q317	F-1
Q318	F-2
Q319	F-2
Q320	E-5
Q322	E-5
Q401	F-4
Q402	F-4
Q453	F-6
Q454	F-6
Q501	C-6
Q502	F-5
Q504	F-5
Q551	G-5
Q552	G-4
Q553	G-5
Q554	G-3
Q555	G-5
Q556	G-3
Q557	G-5
Q558	G-5
Q560	G-5
Q561	G-5
Q564	G-3
Q565	I-2
Q566	I-2
Q567	I-2
Q568	H-2
Q572	G-1
Q576	G-1
Q580	H-1
Q583	J-1
Q584	J-1
Q585	J-1
Q587	H-1
Q590	L-1
Q591	K-1
Q592	K-1
Q594	I-1
Q598	I-1
Q601	L-3
Q602	L-2
Q603	L-2
Q604	H-2
Q605	H-1
Q607	I-1
Q610	K-3
Q611	K-2
Q612	K-2
Q613	H-2
Q614	H-1
Q616	H-1
Q619	G-3
Q621	G-3
Q701	J-6
Q702	J-6
Q801	I-6
Q802	I-6
Q901	I-4
Q902	I-4
Q903	I-5
Q904	I-5
Q909	H-4
Q910	H-4
Q911	H-4
Q912	H-4
Q913	H-4
Q914	H-4
Q915	H-4
Q916	G-4
Q917	H-5
Q919	H-6
Q920	H-5

Integrated Circuits

IC2	L-4
IC3	M-6
IC5	L-5
IC6	L-6
IC7	M-5
IC14	M-6
IC101	B-1
IC102	A-5
IC104	A-3
IC105	B-4
IC108	C-1
IC201	C-4
IC202	C-3
IC203	C-2
IC251	B-5
IC252	B-5
IC253	A-4
IC271	A-2
IC272	A-3
IC273	B-2
IC301	E-1
IC302	D-5
IC304	D-3
IC305	E-4
IC308	F-1
IC401	F-4
IC402	F-3
IC403	F-2
IC451	E-5
IC452	E-5
IC453	D-4
IC471	D-2
IC472	D-3
IC473	E-2

B0(MOTHER 2)P.C.BOARD

TYPE \ MODEL	AU-665	AU-65	AU-63	AU-62
NTSC	VEP80549B	VEP80549A	VEP80549B	VEP80549A
PAL	VEP80549C	VEP80549A	VEP80549B	VEP80549A

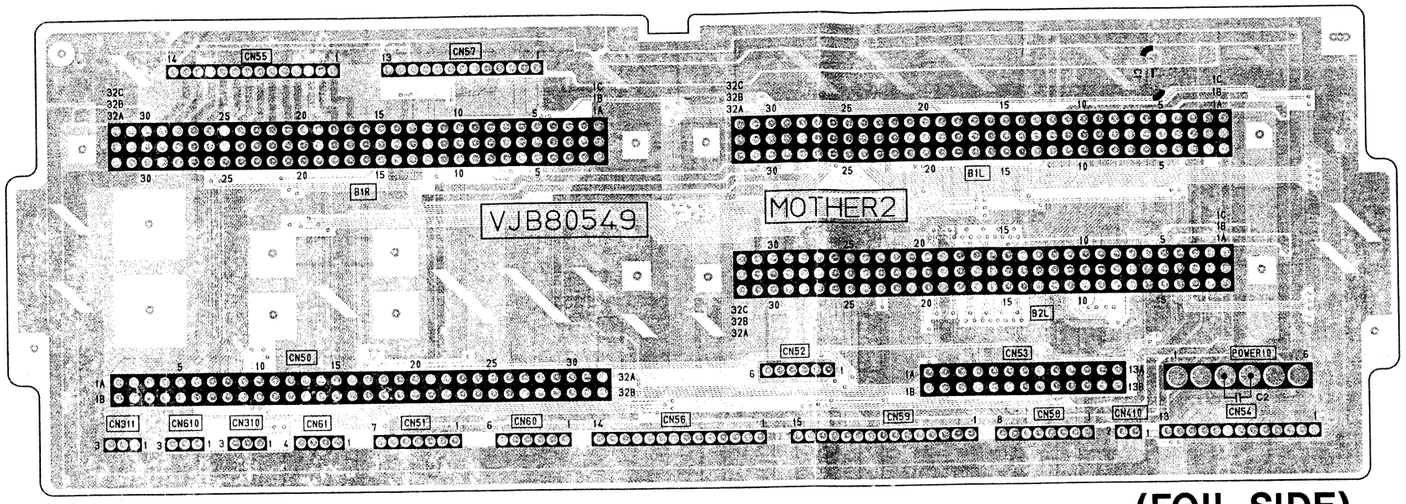

(FOIL SIDE)

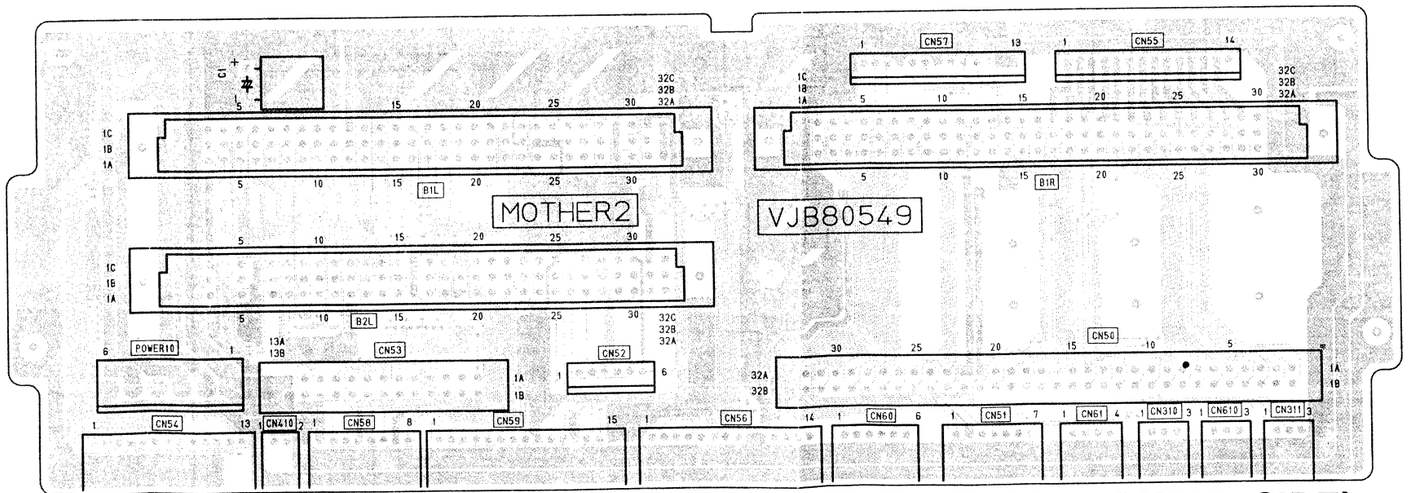

(COMPONENT SIDE)

CHIP PART INFORMATION

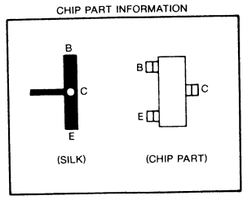

P.C. Board Location

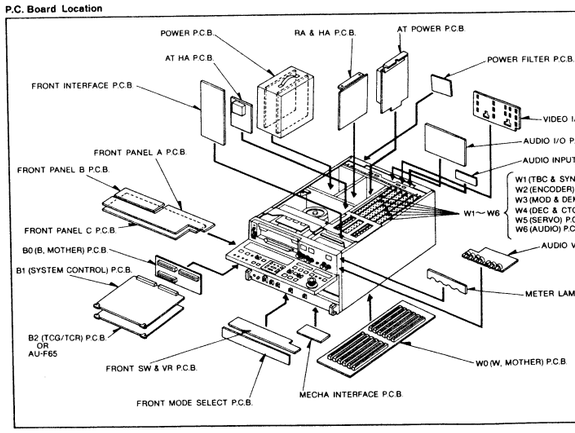

B1(SYSTEM CONTROL)P.C.BOARD

TYPE \ MODEL	AU-665	AU-65	AU-63	AU-62
NTSC	VEP86088B	VEP86088A	VEP86088D	VEP86088C
PAL	VEP86088N	VEP86088E	VEP86088F	VEP86088M

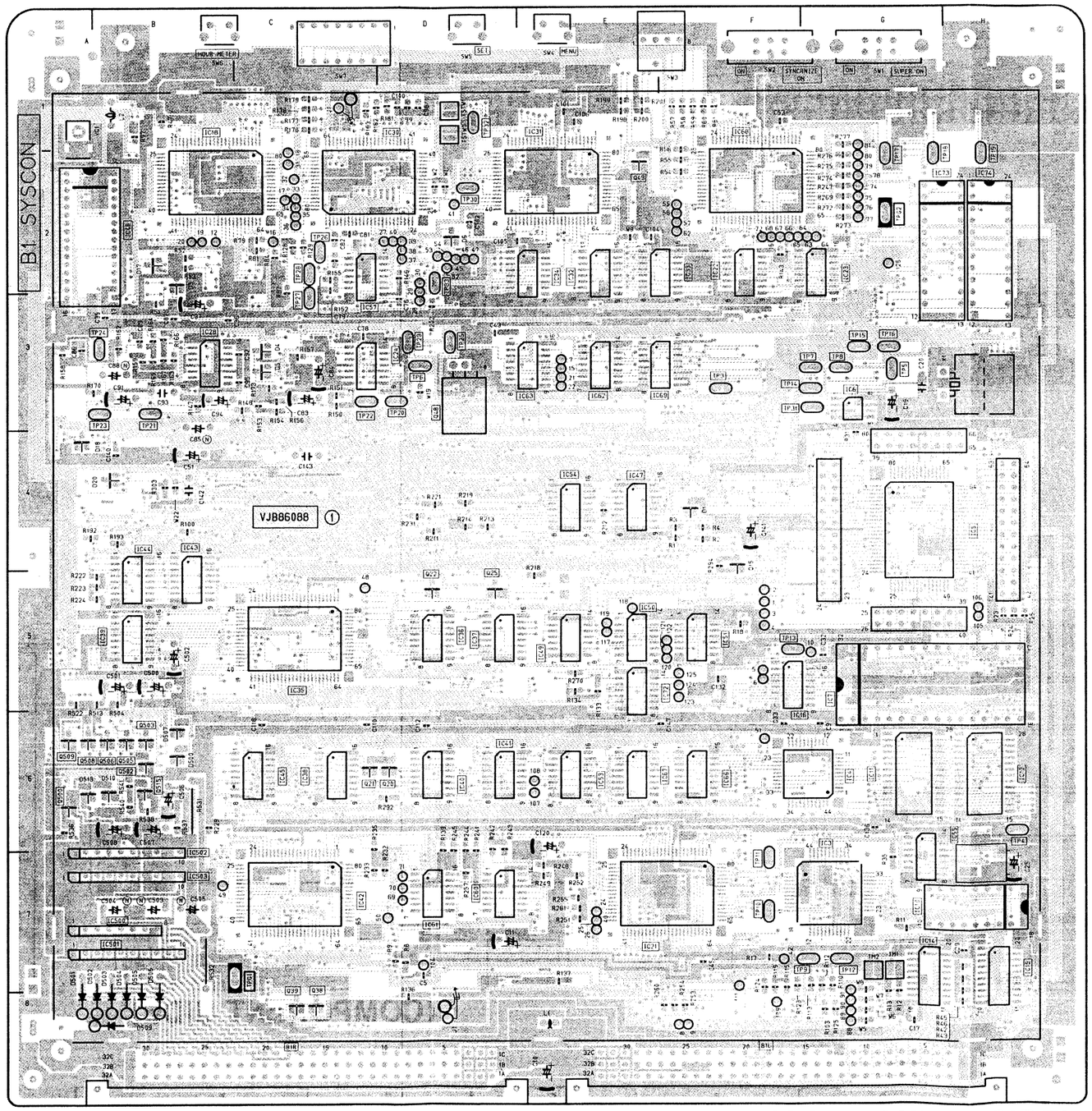

(COMPONENT SIDE)

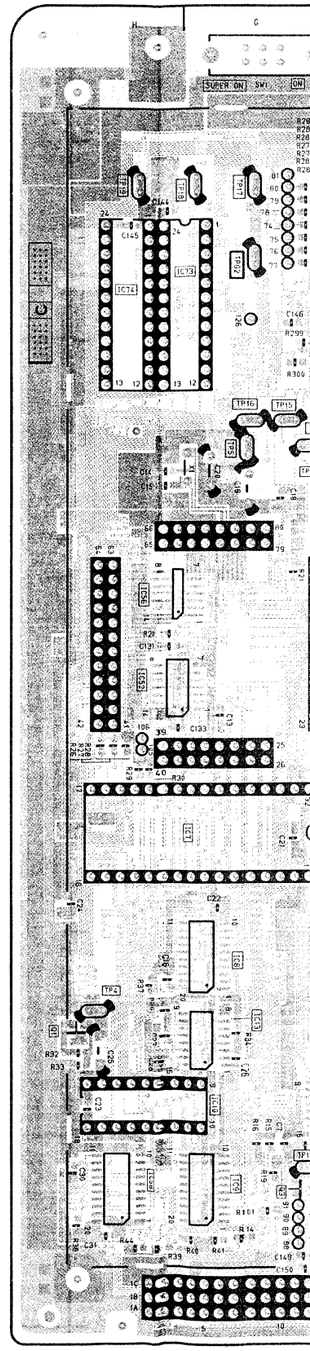

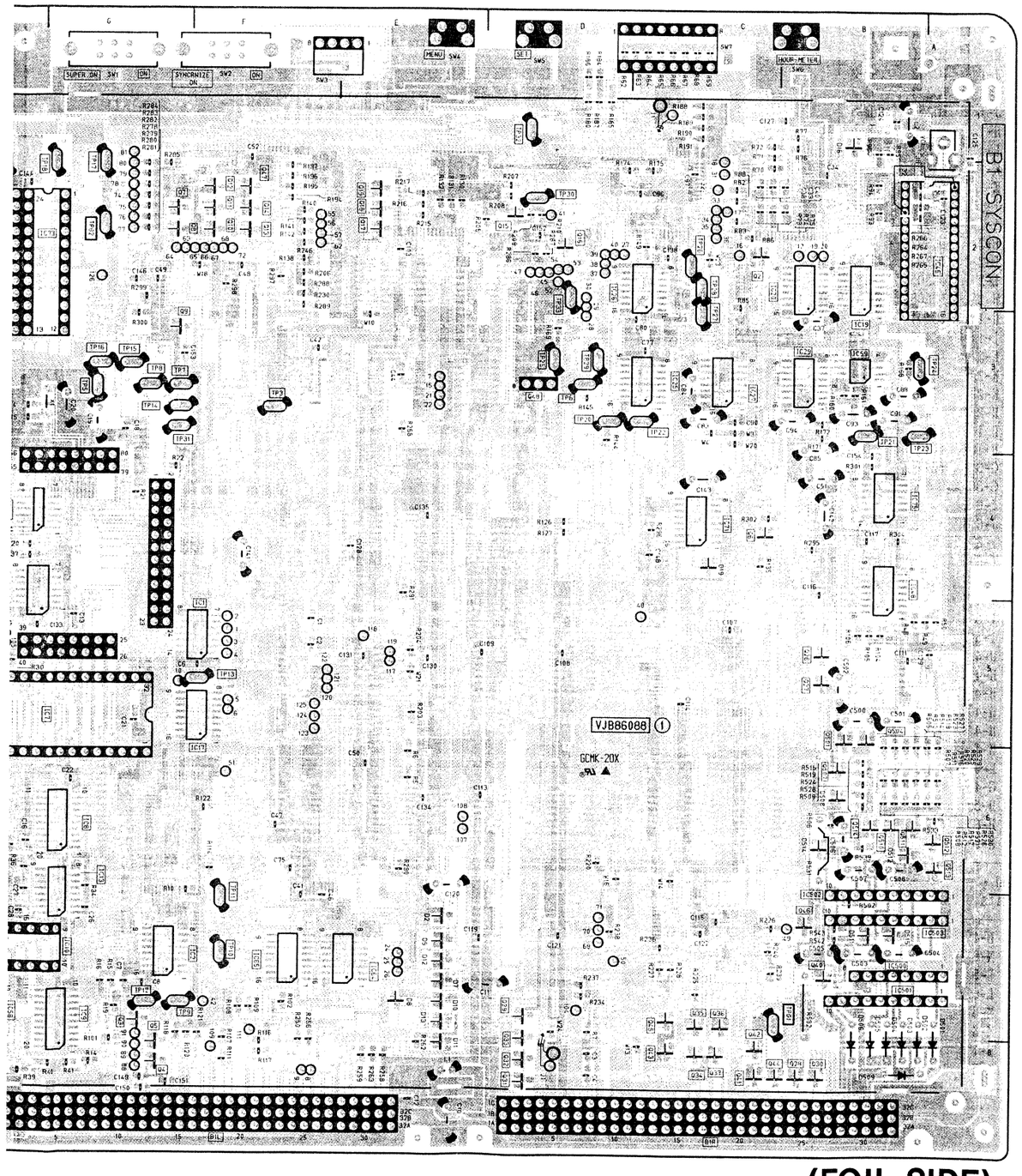

(FOIL SIDE)

CHIP PART INFORMATION

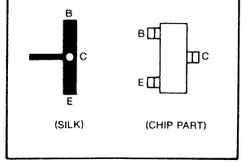

P.C. Board Location

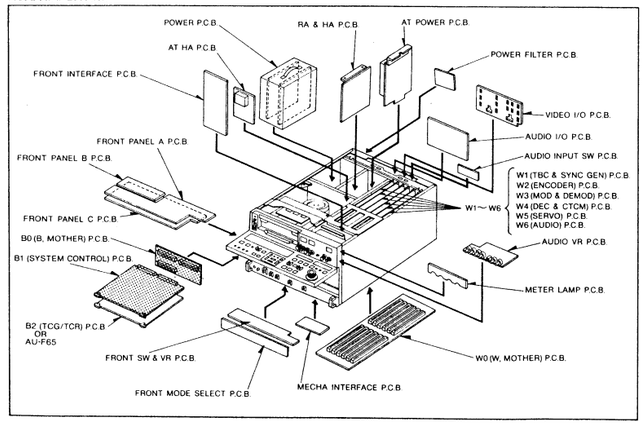

B1 (SYSCON)

COMPONENT SIDE

Transistors	
Q20	D-6
Q21	C-6
Q22	D-5
Q25	D-5
Q38	C-8
Q39	C-8
Q48	D-3
Q49	E-2
Q500	A-6
Q502	B-6
Q503	B-6
Q505	B-6
Q506	B-6
Q508	A-6
Q509	A-6
Q515	B-6

Integrated Circuits	
IC3	G-7
IC4	G-6
IC5	G-4
IC6	G-3
IC7	G-6
IC10	H-7
IC11	G-6
IC12	H-6
IC14	G-7
IC15	H-7
IC16	F-5
IC18	B-2
IC21	F-7
IC22	F-2
IC23	G-2
IC24	C-3
IC28	B-3
IC30	C-2
IC31	E-2
IC32	E-2
IC33	F-2
IC34	E-2
IC35	C-5
IC36	D-5
IC37	D-5
IC38	C-6
IC39	B-5
IC40	D-6
IC41	D-6
IC42	C-7
IC43	B-5
IC44	B-5
IC45	C-6
IC46	A-2
IC47	E-4
IC49	E-5
IC50	E-5
IC51	F-5
IC53	E-6
IC54	E-4
IC55	G-7
IC57	C-2
IC60	D-7
IC61	D-7
IC62	E-3
IC63	E-3
IC66	F-6
IC67	E-6
IC68	F-2
IC69	F-3
IC72	E-5
IC73	H-2
IC74	H-2
IC500	B-7
IC501	B-7
IC502	B-7
IC503	B-7

Test Points	
TP3	F-3
TP4	H-6
TP5	G-3
TP6	D-3
TP7	G-3
TP8	G-3
TP9	G-7
TP10	F-7
TP11	F-7
TP12	G-7
TP13	F-5
TP14	G-3
TP15	G-3
TP16	G-3
TP17	G-2
TP18	G-2
TP19	H-2
TP20	D-3
TP21	B-3
TP22	C-3
TP23	B-3
TP24	B-3
TP25	D-3
TP26	C-2
TP27	C-3
TP28	C-2
TP29	D-3
TP30	D-2
TP31	G-3
TP32	D-1
TP33	D-2

TP GND	
TPG1	C-7
TPG2	G-2

Others	
VC1	A-1

FOIL SIDE

Transistors	
Q1	H-6
Q2	C-2
Q3	G-7
Q4	G-8
Q5	G-8
Q6	C-4
Q7	G-2
Q8	G-2
Q9	G-3
Q10	F-2
Q11	F-2
Q12	F-2
Q13	F-2
Q14	F-2
Q15	D-2
Q16	D-2
Q17	E-2
Q18	E-2
Q19	E-2
Q26	B-5
Q27	B-5
Q28	B-8
Q29	D-7
Q30	B-8
Q31	D-8
Q32	D-8
Q33	D-8
Q34	C-8
Q35	C-7
Q36	C-7
Q37	C-8
Q40	B-7
Q41	C-8
Q42	C-8
Q43	C-8
Q44	B-8
Q45	C-7
Q46	B-7
Q47	F-2
Q501	B-5
Q504	B-5
Q507	B-6
Q510	B-6
Q511	B-6
Q512	A-6
Q513	A-6
Q514	B-6

Integrated Circuits	
IC1	F-5
IC2	G-7
IC8	G-6
IC9	G-7
IC13	G-7
IC17	F-5
IC19	B-2
IC20	B-2
IC25	C-3
IC26	C-2
IC27	C-3
IC29	B-3
IC48	B-4
IC52	H-4
IC56	H-4
IC58	H-7
IC59	B-3
IC64	E-7
IC65	F-7
IC71	C-4
IC75	B-4

B2 (TCG/TCR)

COMPONENT SIDE

Transistors	
Q202	E-1
Q203	E-2

Integrated Circuits	
IC1	D-3
IC2	D-2
IC3	C-2
IC4	E-6
IC5	E-5
IC6	E-6
IC7	D-4
IC8	B-3
IC9	B-7
IC10	B-7
IC11	B-5
IC12	B-8
IC13	B-8
IC14	C-6
IC15	B-7
IC16	C-8
IC17	B-7
IC18	D-7
IC19	C-8
IC20	C-5
IC21	C-5
IC201	H-7
IC202	G-3
IC203	G-2
IC204	H-2
IC205	H-4
IC206	H-5
IC207	H-6
IC208	H-3
IC209	G-2
IC210	F-2
IC211	F-2
IC212	F-2
IC213	F-4
IC215	F-5
IC216	G-6
IC217	F-4
IC218	G-3
IC220	G-7
IC221	F-7
IC222	E-2
IC223	G-5
IC224	F-3

Test Points	
TP1	B-5
TP2	B-6
TP3	A-7
TP4	C-6
TP5	B-6
TP6	A-3
TP201	H-7
TP202	H-6
TP203	G-1
TP204	F-1
TP205	G-1
TP206	F-1
TP207	G-2
TP208	G-2
TP209	H-3
TP210	F-3
TP211	H-4
TP212	F-6

TP GND	
TPG1	B-1
TPG201	H-1

Others	
VR201	H-5
VR202	H-6
VR203	H-5
VR204	H-2
VR205	G-5
VR206	F-5
VR207	F-5
VR208	F-5
VR209	F-6
VR210	G-6
VR211	F-4

FOIL SIDE

Transistors	
Q1	B-4
Q2	B-4
Q3	B-3
Q4	B-3
Q5	C-6
Q6	D-7
Q7	C-7
Q8	A-4
Q9	B-3
Q201	G-2
Q204	F-5
Q205	F-6
Q206	F-6
Q207	F-7
Q208	G-6
Q209	G-6
Q210	G-6
Q211	G-6
Q212	G-6
Q213	F-6

P.C. Board Location

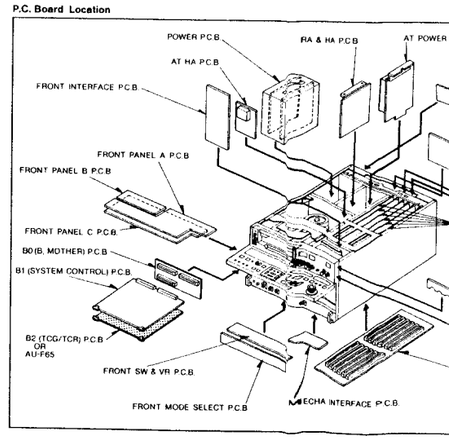

B2(TC & BB)P.C.BOARD

TYPE \ MODEL	AU-665	AU-65	AU-63	AU-62
NTSC	VEP86089B	Refer to AU-F65 Section		
PAL	VEP86089F			

CHIP PART INFORMATION

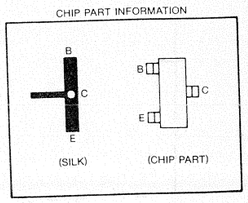

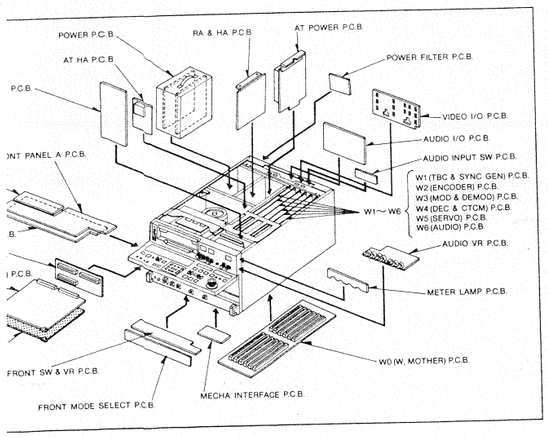

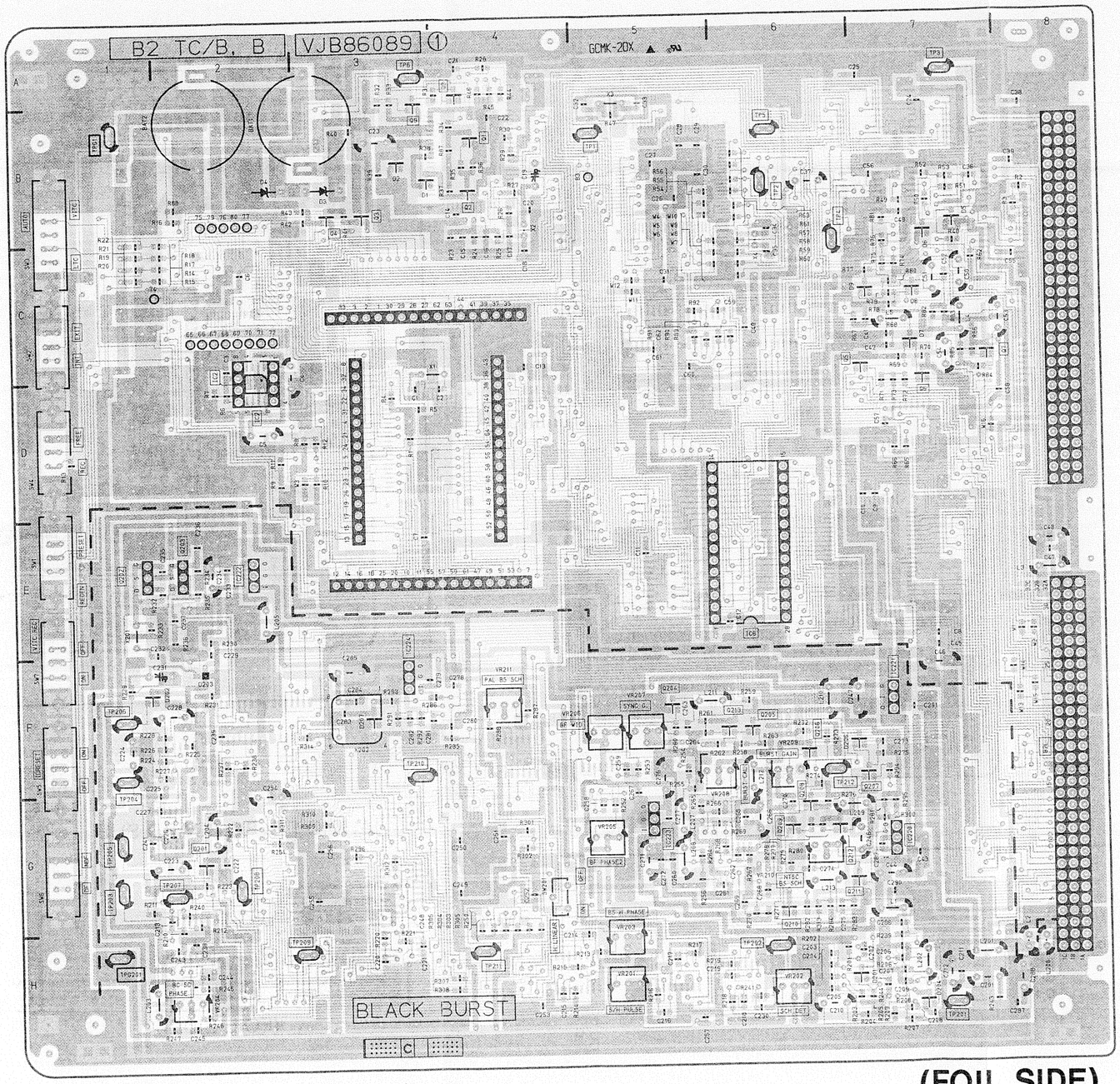

(FOIL SIDE)

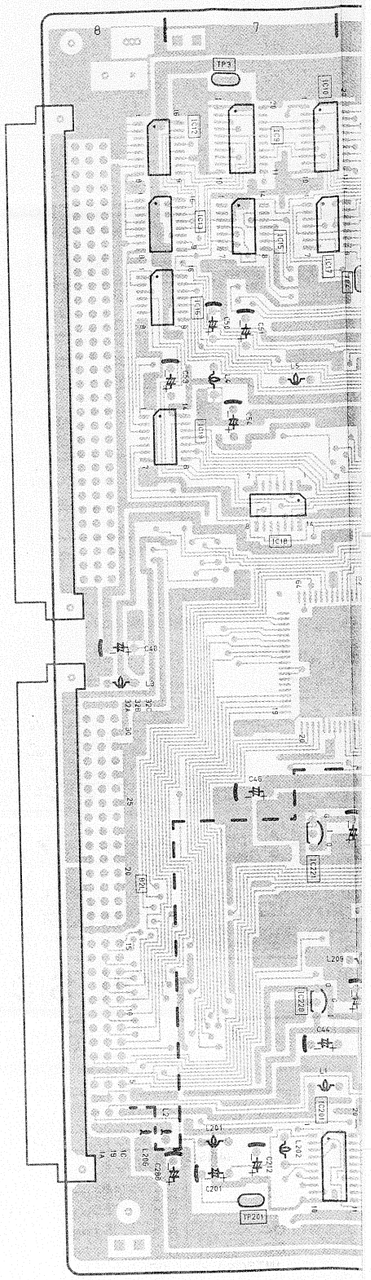

This P.C.Bo
P.C.Board D
AU-F65 sect

BOARD

TYPE \ MODEL	AU-665	AU-65	AU-63	AU-62
NTSC	VEP86089B	Refer to AU-F65 Section		
PAL	VEP86089F			

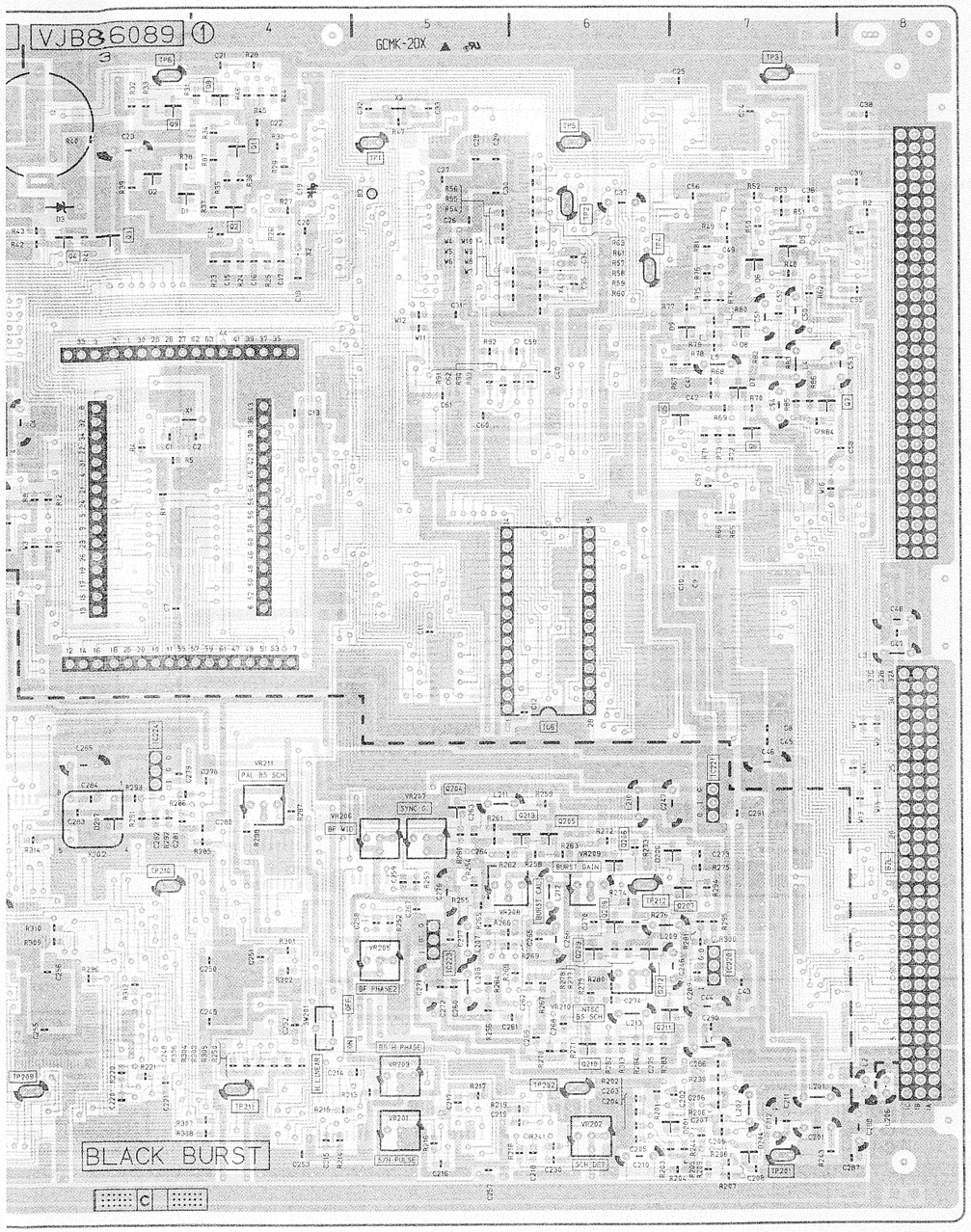

(FOIL SIDE)

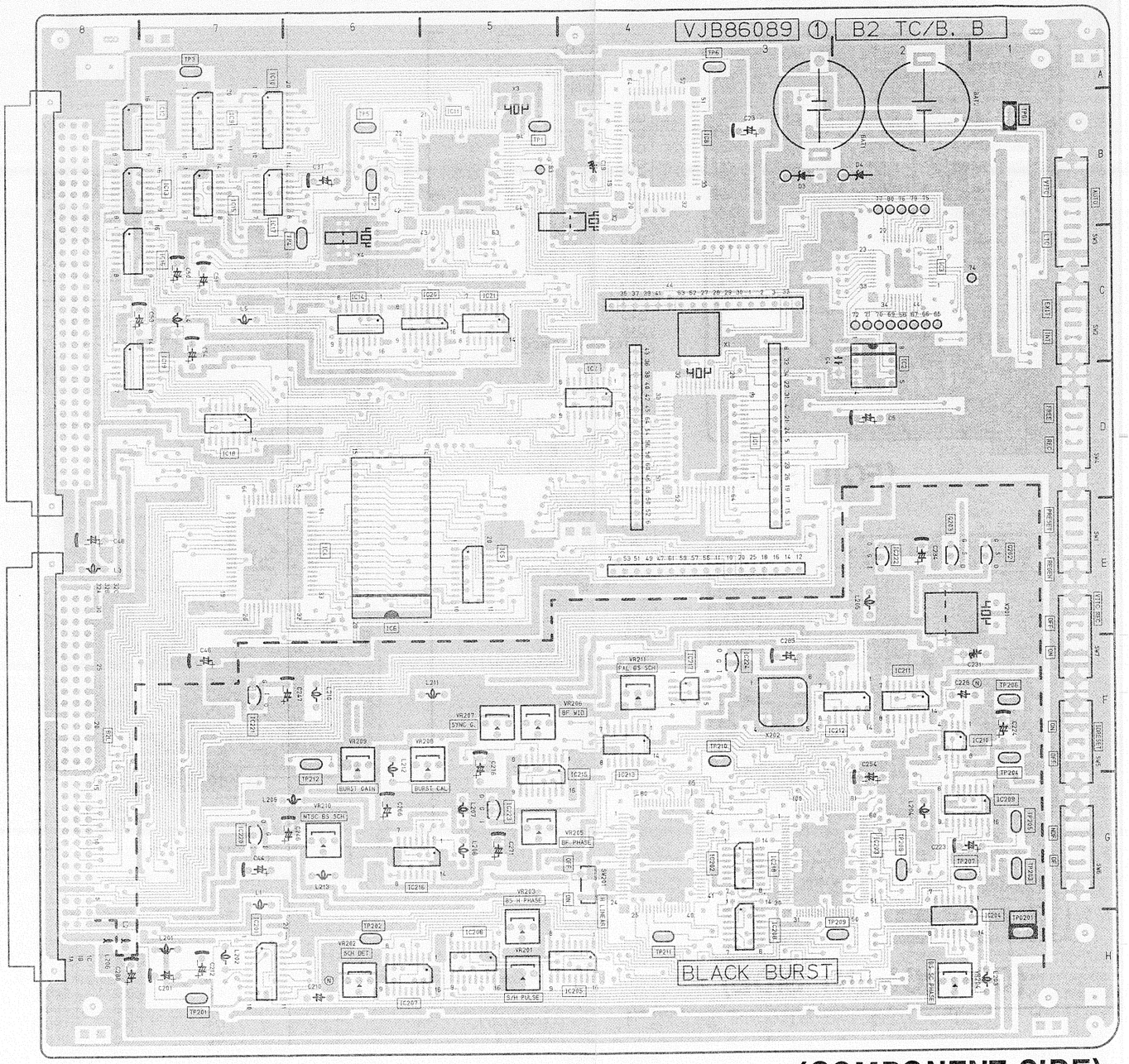

(COMPONENT SIDE)

This P.C.Board Diagram is used for AU-665.
P.C.Board Diagram of AU-F65 is shown in
AU-F65 section, page after 7-1.

REVERSE SIDE

AT. HA P.C.BOARD
AT POWER P.C.BOAI
AUDIO I/O P.C.BOAI

AT H.A P.C.BOARD

TYPE \ MODEL	AU-665	AU-65	AU-63	AU-62
NTSC	VEP85018A	Not Used	Not Used	Not Used
PAL	VEP85018B	Not Used	Not Used	Not Used

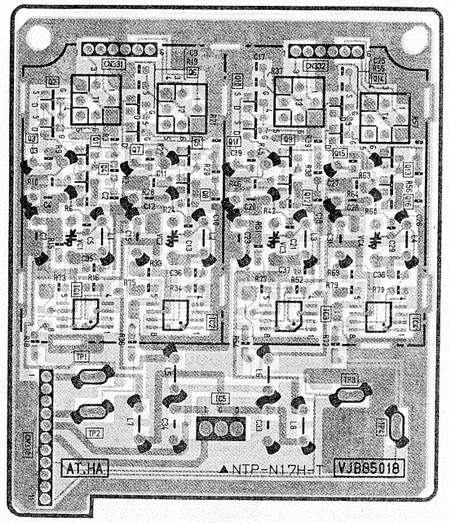

(FOIL SIDE)

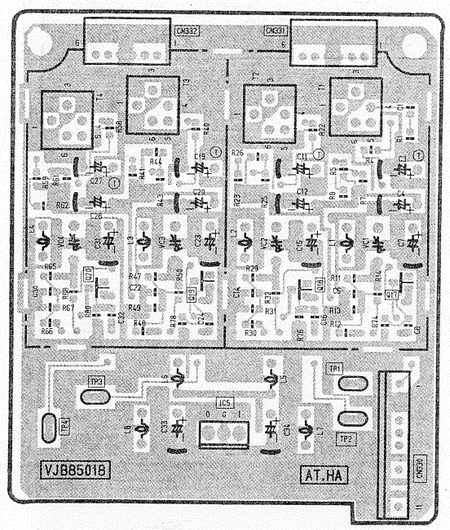

(COMPONENT SIDE)

AT H.A	
FOIL SIDE	
TRANSISTOR	
Q1	F-1
Q2	F-1
Q3	F-1
Q4	F-1
Q5	F-2
Q6	F-1
Q7	F-1
Q8	F-2
Q9	F-2
Q10	F-2
Q11	F-2
Q12	F-2
Q13	F-3
Q14	F-2
Q15	F-2
Q16	F-3
INTEGRATED CIRCUIT	
IC1	E-1
IC2	E-2
IC3	E-2
IC4	E-3
IC5	D-2
TEST POINT	
TP1	E-1
TP2	D-1
TP3	E-3
TP4	D-3
CONNECTOR	
CN330	D-1
CN331	F-1
CN332	F-2
COMPONENT SIDE	
TRANSISTOR	
Q17	B-3
Q18	B-2
Q19	B-2
Q20	B-1

ADDRESS INFORMATION

AT.HA.):This P.C.Board Diagram is used for AU-665 only. AU-63's AT Head signal is amplifyed by RA&HA P.C.Board.

AT POWER P.C.BOARD

TYPE \ MODEL	AU-665	AU-65	AU-63	AU-62
NTSC	VEP82062A	Not Used	VEP82062A	Not Used
PAL	VEP82062A	Not Used	VEP82062A	Not Used

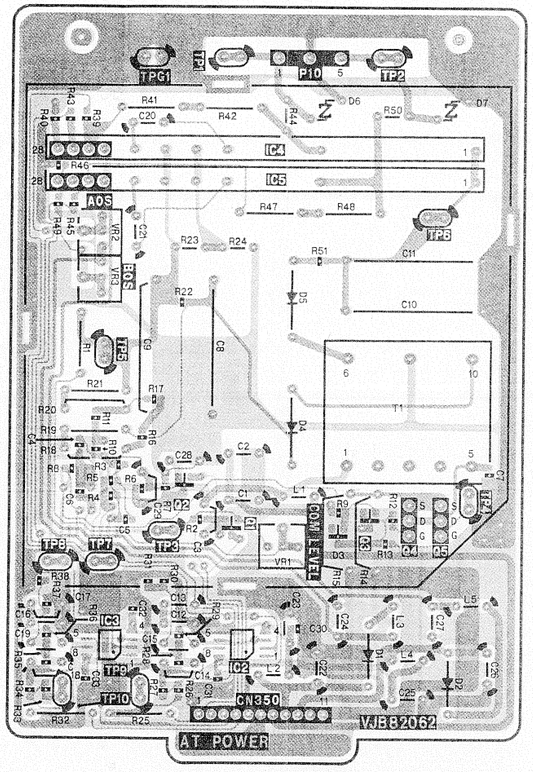

(FOIL SIDE)

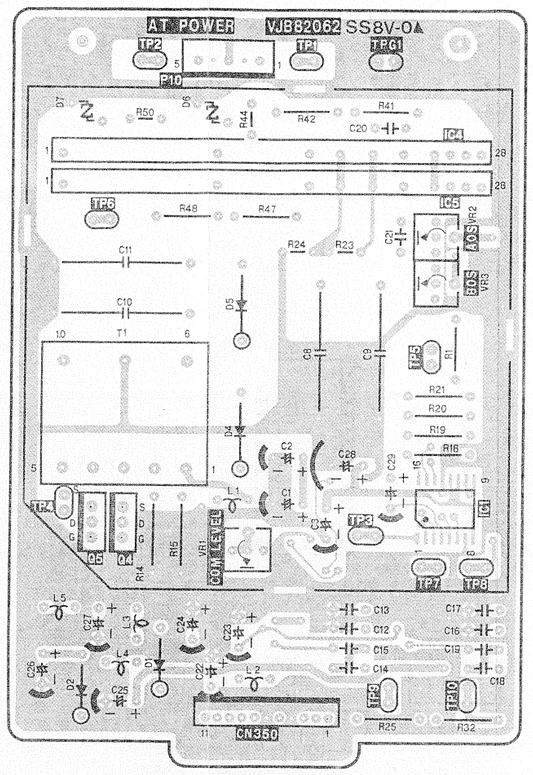

(COMPONENT SIDE)

AT POWER							
FOIL SIDE		TEST POINT		ADJUSTMENT		COMPONENT SIDE	
TRANSISTOR		TP1	D-2	VR1	B-2	INTEGRATED CIRCUIT	
Q1	B-2	TP2	D-3	VR2	C-1	IC1	B-7
Q2	B-2	TP3	B-2	VR3	C-1		
Q3	B-3	TP4	B-3				
Q4	B-3	TP5	C-1				
Q5	B-3	TP6	D-3				
INTEGRATED CIRCUIT		TP7	B-1				
IC2	A-2	TP8	B-1				
IC3	A-1	TP9	A-1				
IC4	D-2	TP10	A-1				
IC5	D-2	TPG1	D-2				

ADDRESS INFORMATION

AUDIO I/O P.C.BOARD

TYPE \ MODEL	AU-665	AU-65	AU-63	AU-62
NTSC	VEP84094B	VEP84094A	VEP84094C	VEP84094C
PAL	VEP84094D	VEP84094A	VEP84094C	VEP84094C

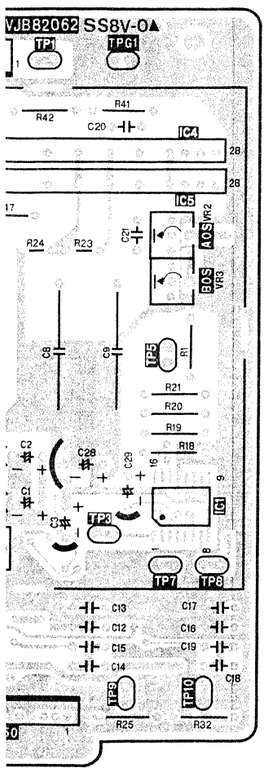

(COMPONENT SIDE)

6 7

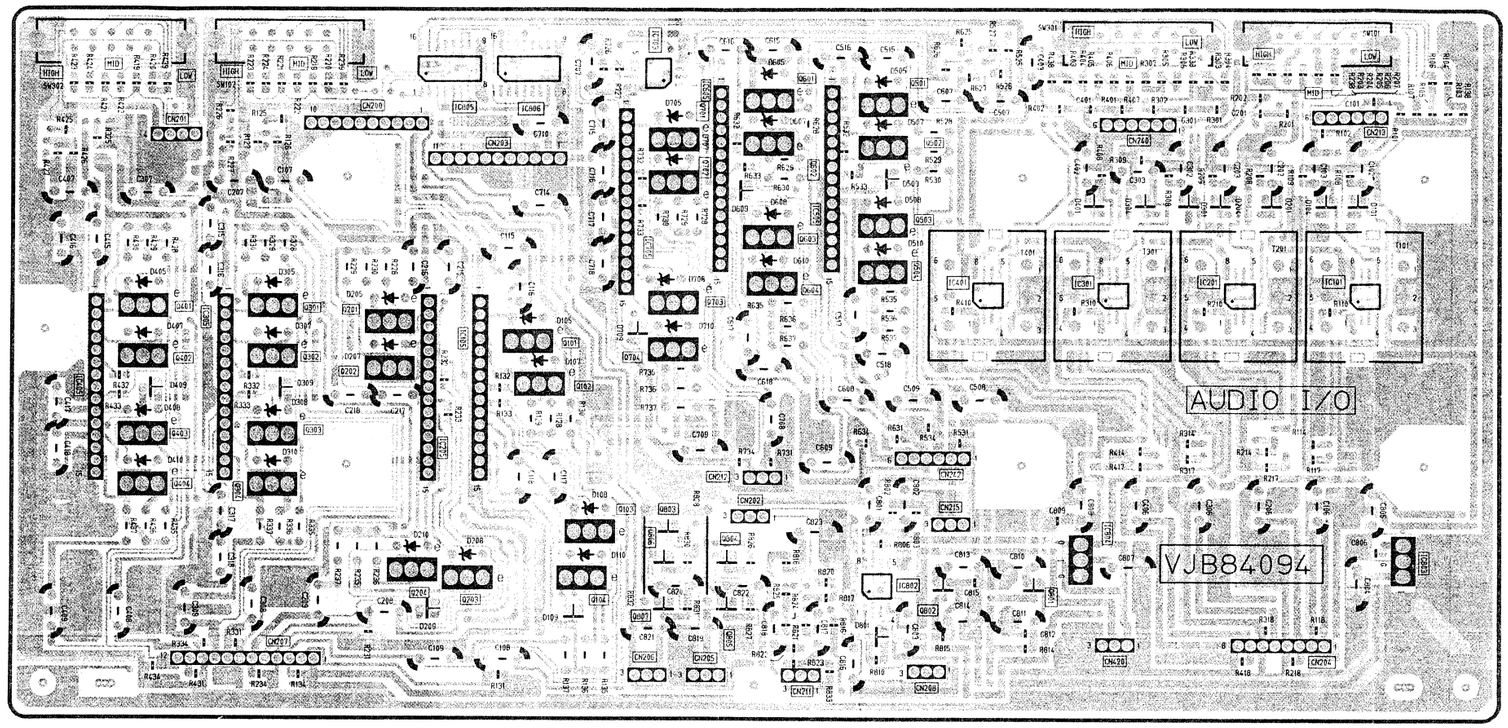

(FOIL SIDE)

D C B A

1 2 3 4 5 6 7 8 9 10

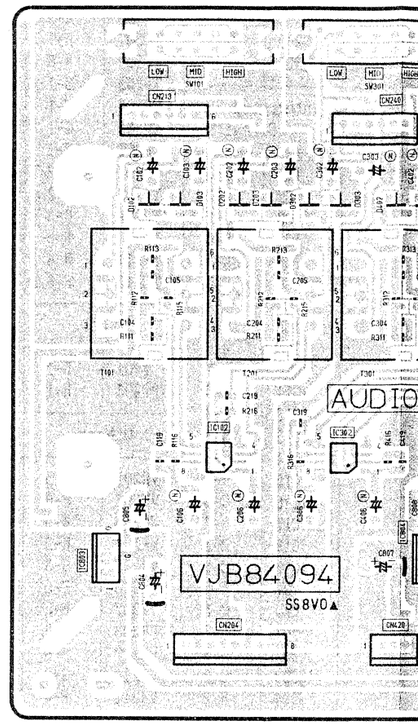

CHIP

B C E

(SILK)

AUDIO I/O P.C.BOARD SUB

TYPE \ MODEL	AU-665	AU-65	AU-63	AU-62
NTSC	VEP80573A	VEP80573A	VEP80573A	VEP80573A
PAL	VEP80573A	VEP80573A	VEP80573A	VEP80573A

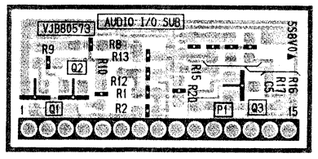

(FOIL SIDE)

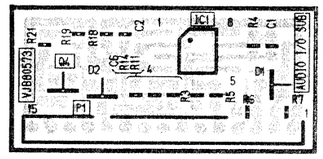

(COMPONENT SIDE)

AUDIO I/O

FOIL SIDE		Q504	C-5	IC301	C-6	CN206	A-4	COMPONENT SIDE	
TRANSISTOR		Q601	D-5	IC305	C-2	CN207	A-2	INTEGRATED CIRCUIT	
Q101	C-3	Q602	D-5	IC401	C-6	CN208	A-5	IC102	B-10
Q102	C-3	Q603	C-5	IC405	C-1	CN211	A-5	IC103	D-15
Q103	B-4	Q604	C-5	IC505	C-5	CN212	B-5	IC302	B-10
Q104	B-4	Q701	D-4	IC605	D-4	CN213	D-8	IC303	D-16
Q201	C-3	Q702	D-4	IC703	D-4	CN215	B-6	IC503	D-11
Q202	C-3	Q703	C-4	IC705	C-4	CN240	D-6	IC704	D-13
Q203	B-3	Q704	C-4	IC802	B-5	CN242	B-5	IC801	B-12
Q204	B-3	Q801	A-6	IC803	B-8	CN420	A-6	IC808	B-12
Q301	C-2	Q802	A-5	IC804	B-6				
Q302	C-2	Q803	B-4	IC805	D-3				
Q303	B-2	Q804	B-4	IC806	D-3				
Q304	B-2	Q805	A-4						
Q401	C-2	Q806	B-4	CONNECTOR					
Q402	C-2	Q807	A-4	CN200	D-3				
Q403	B-2	INTEGRATED CIRCUIT		CN201	D-2				
Q404	B-2	IC101	C-8	CN202	B-5				
Q501	D-5	IC105	C-3	CN203	D-3				
Q502	D-5	IC201	C-7	CN204	A-7				
Q503	C-5	IC205	B-3	CN205	A-4				

ADDRESS INFORMATION

U-63	AU-62
'84094C	VEP84094C
'84094C	VEP84094C

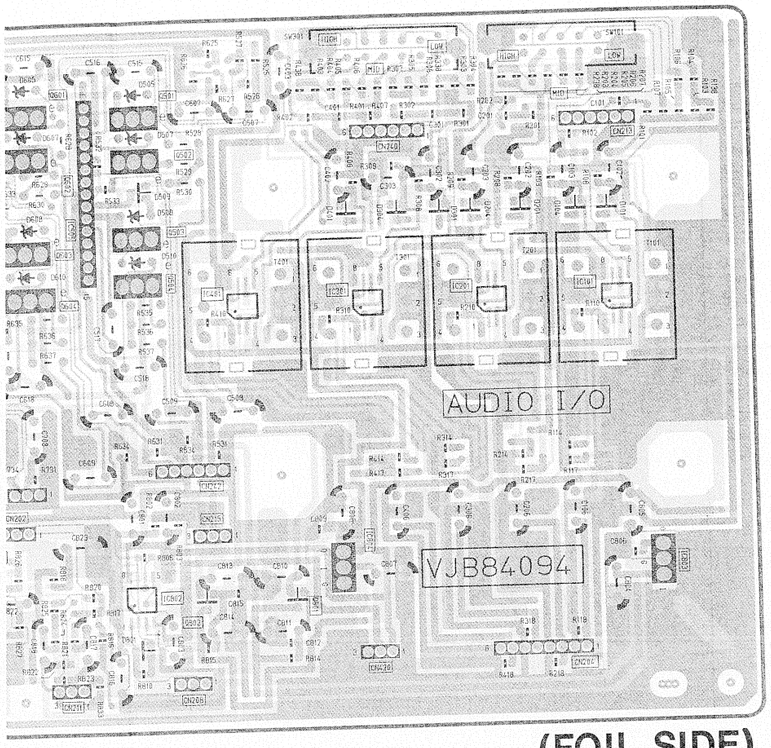

(FOIL SIDE)

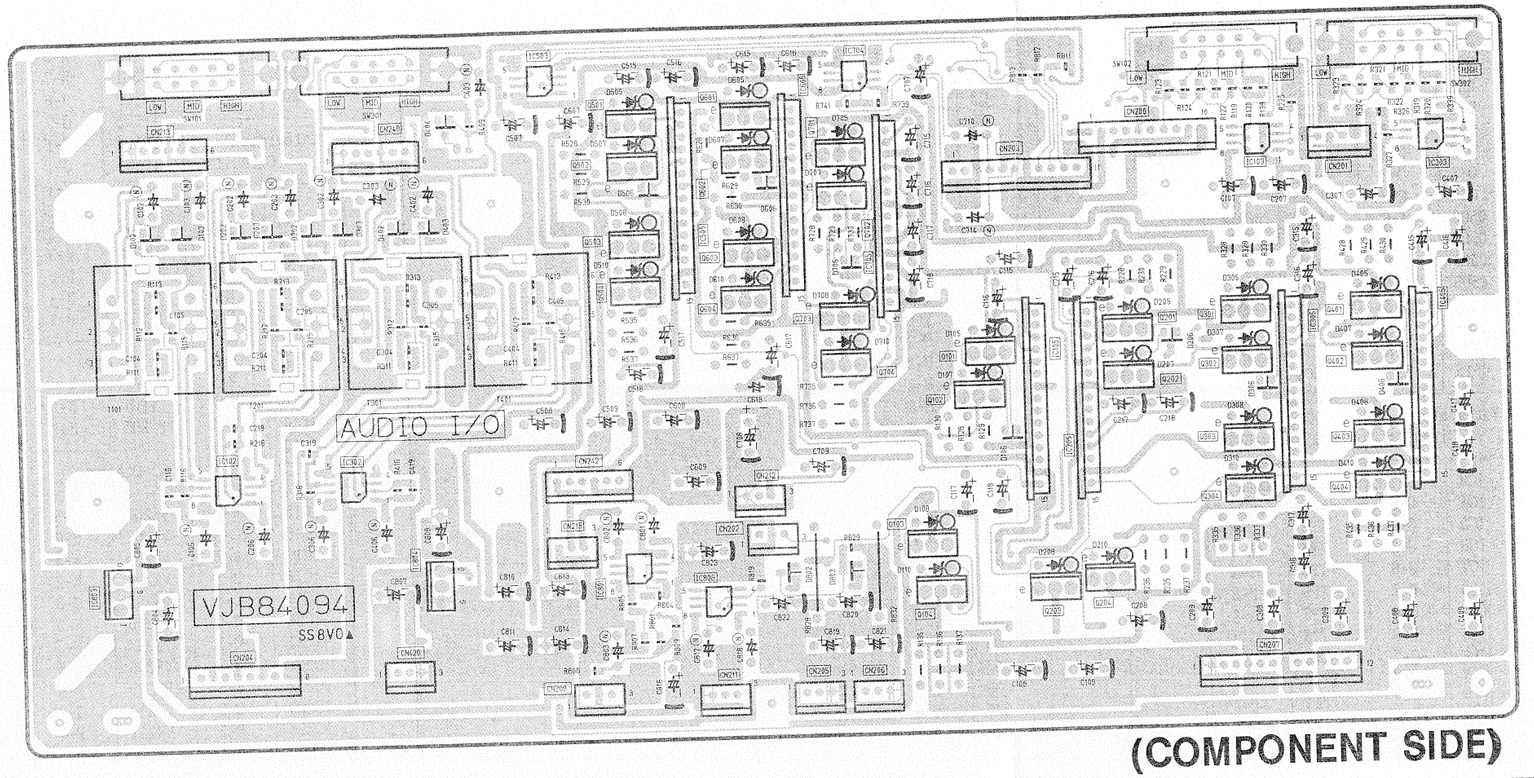

(COMPONENT SIDE)

5 6 7 8 9 10 11 12 13 14 15 16

3	AU-62
'3A	VEP80573A
'3A	VEP80573A

AUDIO I/O

FOIL SIDE	
TRANSISTOR	
Q101	C-3
Q102	C-3
Q103	B-4
Q104	B-4
Q201	C-3
Q202	C-3
Q203	B-3
Q204	B-3
Q301	C-2
Q302	C-2
Q303	B-2
Q304	B-2
Q401	C-2
Q402	C-2
Q403	B-2
Q404	B-2
Q501	D-5
Q502	D-5
Q503	C-5
Q504	C-5
Q601	D-5
Q602	D-5
Q603	C-5
Q604	C-5
Q701	D-4
Q702	D-4
Q703	C-4
Q704	C-4
Q801	A-6
Q802	A-5
Q803	B-4
Q804	B-4
Q805	A-4
Q806	B-4
Q807	A-4
INTEGRATED CIRCUIT	
IC101	C-8
IC105	C-3
IC201	C-7
IC205	B-3
IC301	C-6
IC305	C-2
IC401	C-6
IC405	C-1
IC505	C-5
IC605	D-4
IC703	D-4
IC705	C-4
IC802	B-5
IC803	B-8
IC804	B-6
IC805	D-3
IC806	D-3
CONNECTOR	
CN200	D-3
CN201	D-2
CN202	B-5
CN203	D-3
CN204	A-7
CN205	A-4
CN206	A-4
CN207	A-2
CN208	A-5
CN211	A-5
CN212	B-5
CN213	D-8
CN215	B-6
CN240	D-6
CN242	B-5
CN420	A-6
COMPONENT SIDE	
INTEGRATED CIRCUIT	
IC102	B-10
IC103	D-15
IC302	B-10
IC303	D-16
IC503	D-11
IC704	D-13
IC801	B-12
IC808	B-12

ADDRESS INFORMATION

CHIP PART INFORMATION

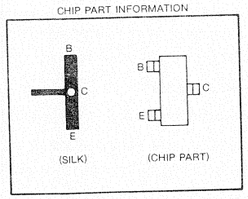

P.C. Board Location

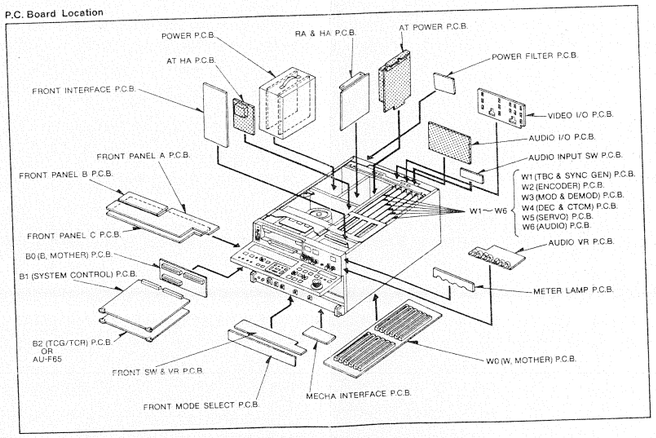

AUDIO VR P.C.BOARD

TYPE \ MODEL	AU-665	AU-65	AU-63	AU-62
NTSC	VEP84102A	VEP84101A	VEP84101C	VEP84101B
PAL	VEP84102A	VEP84101A	VEP84101C	VEP84101B

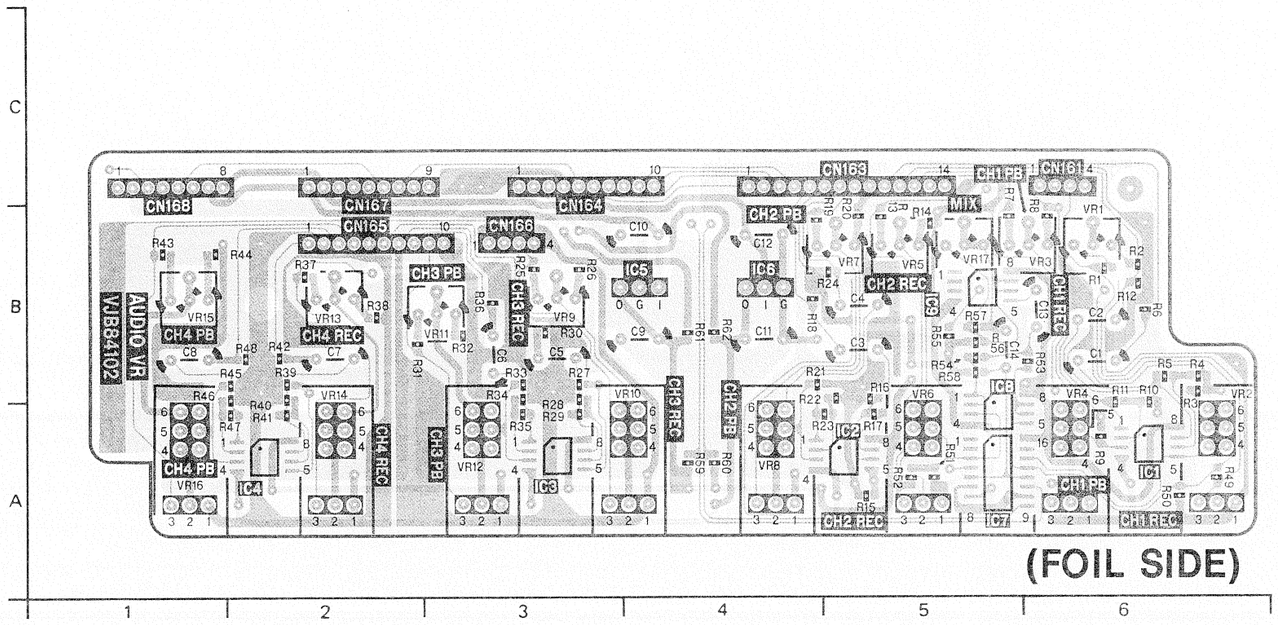

AUDIO VR			
FOIL SIDE		VR9	B-3
INTEGRATED CIRCUIT		VR10	A-4
IC1	A-6	VR11	B-3
IC2	A-5	VR12	A-3
IC3	A-3	VR13	B-2
IC4	A-2	VR14	A-2
IC5	B-4	VR15	B-1
IC6	B-4	VR16	A-1
IC7	A-5	VR17	B-5
IC8	A-5	CONNECTOR	
IC9	B-5	CN161	C-6
ADJUSTMENT		CN163	C-5
VR1	B-6	CN164	C-3
VR2	A-6	CN165	B-2
VR3	B-6	CN166	B-3
VR4	A-6	CN167	C-2
VR5	B-5	CN168	C-1
VR6	A-5		
VR7	B-5		
VR8	A-4		

ADDRESS INFORMATION

AUDIO INPUT S

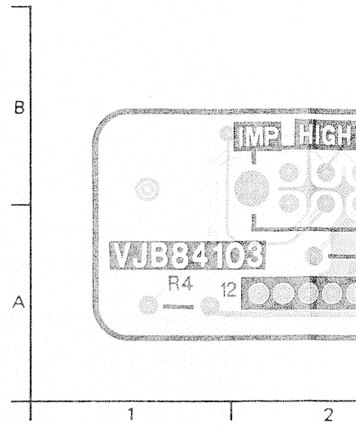

CHIP PART INFORMATION

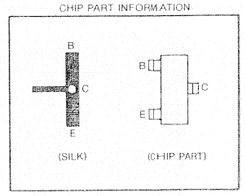

AUDIO VR P.C.BOARD

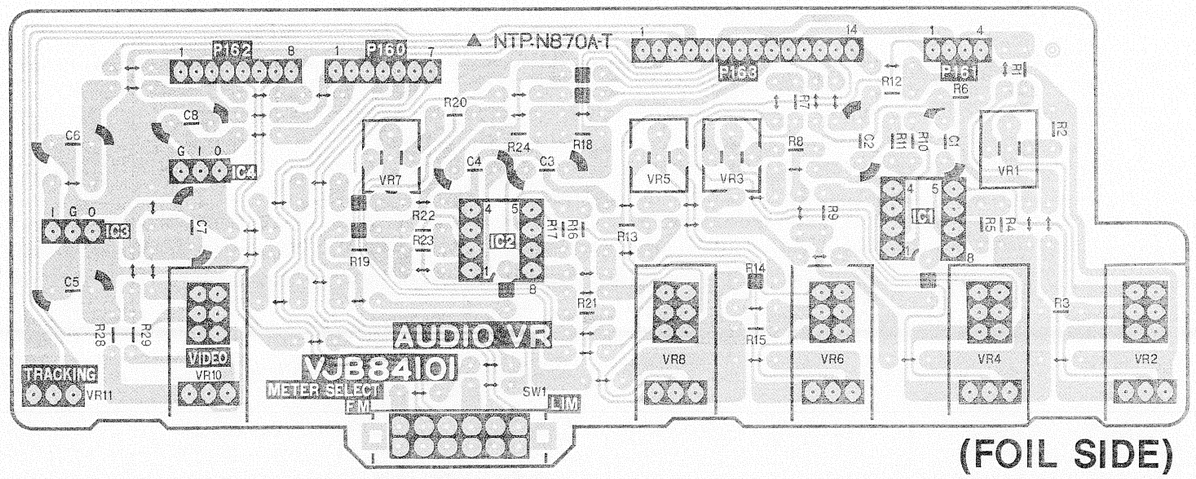

AUDIO VR			
FOIL SIDE		VR7	B-3
INTEGRATED CIRCUIT		VR8	A-4
IC1	B-5	VR10	A-2
IC2	B-3	VR11	A-1
IC3	B-2		
IC4	B-1	CONNECTOR	
ADJUSTMENT		P160	C-3
VR1	B-6	P161	C-6
VR2	A-6	P162	C-2
VR3	B-4	P163	C-4
VR4	A-6		
VR5	B-4		
VR6	A-5		

ADDRESS INFORMATION

FRONT MODE

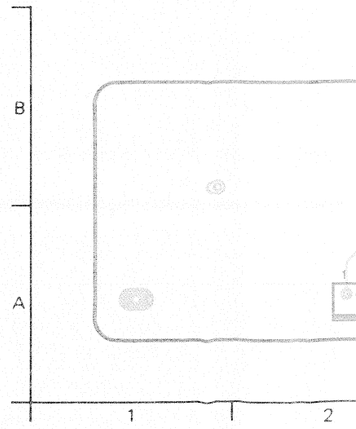

TYPE \ MODEL	AU-665	AU-65	AU-63
NTSC	VEP80422B	VEP80422B	VEP80422B
PAL	VEP80422A	VEP80422B	VEP80422B

EJECT INTER P.C.BOARD

(FOI

P115 P112

4 1 4 1

TYPE \ MODEL	AU-665	AU-65	AU-63	
NTSC	VEP00E30A	VEP00E30A	VEP00E30A	VE
PAL	VEP00E30A	VEP00E30A	VEP00E30A	VE

CASSETTE DETECT P.C.BOARD
(FOIL SIDE)

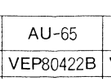

	B-3
	A-4
	B-3
	A-3
	B-2
	A-2
	B-1
	A-1
	B-5
NNECTOR	
	C-6
	C-5
	C-3
	B-2
	B-3
	C-2
	C-1

AUDIO INPUT SW P.C.BOARD

TYPE \ MODEL	AU-665	AU-65	AU-63	AU-62
NTSC	VEP84103B	Not Used	Not Used	Not Used
PAL	VEP84103A	Not Used	Not Used	Not Used

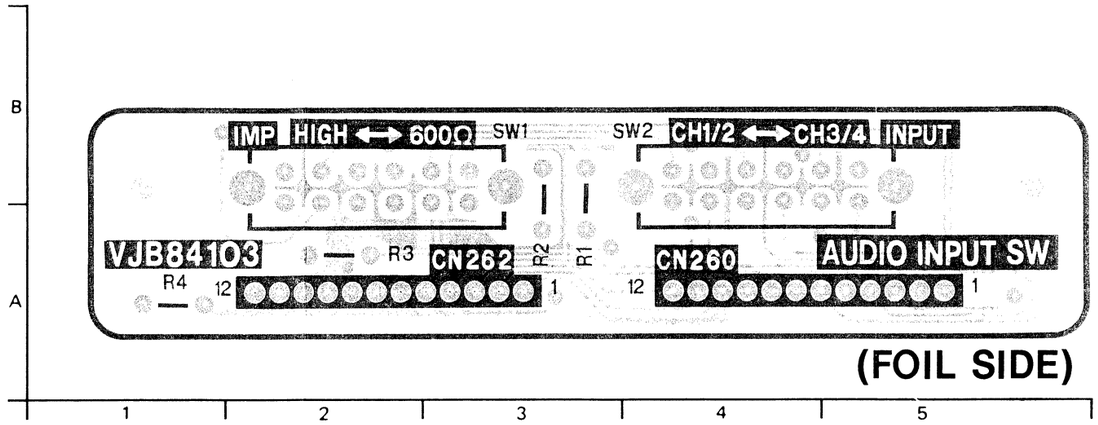

AUDIO OUTPUT SW	
FOIL SIDE	
CONNECTOR	
CN260	A-3
CN262	A-4

ADDRESS INFORMATION

CHIP PART INFORMATION

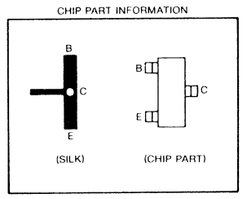

FRONT MODE SELECT CIRCUIT			
FOIL SIDE		CONNECTOR	
TRANSISTOR		CN180	A-2
Q1	A-4	CN181	A-11
Q2	A-4	P153	A-10
Q3	B-9	P155	A-9
Q4	A-11		
INTEGRATED CIRCUIT			
IC1	B-10		

ADDRESS INFORMATION

	B-3
	A-4
	A-2
	A-1
NNECTOR	
	C-3
	C-6
	C-2
	C-4

FRONT MODE SELECT CIRCUIT P.C.BOARD

TYPE \ MODEL	AU-665	AU-65	AU-63	AU-62
NTSC	VEP80559B	VEP80559A	VEP80559D	VEP80559C
PAL	VEP80559B	VEP80559A	VEP80559D	VEP80559C

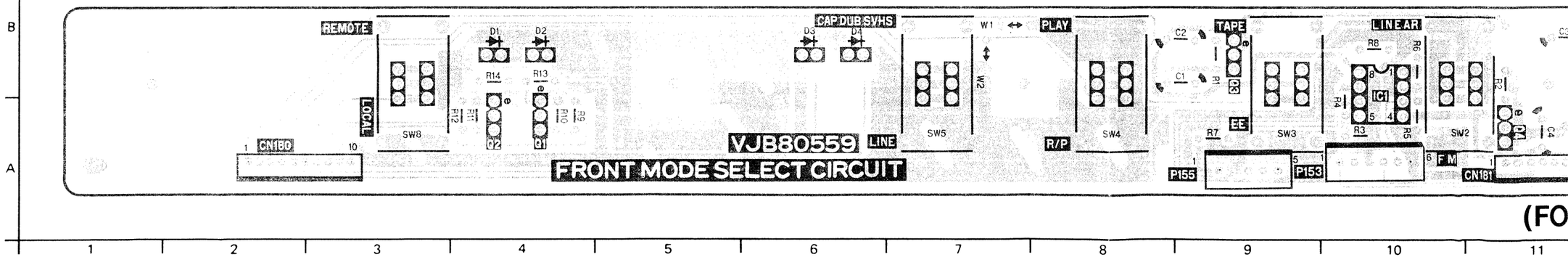

MODEL / TYPE	AU-665	AU-65	AU-63	AU-62
NTSC	VEP80422B	VEP80422B	VEP80422B	VEP80422B
PAL	VEP80422A	VEP80422B	VEP80422B	VEP80422B

EJECT INTER P.C.BOARD

(FOIL SIDE)

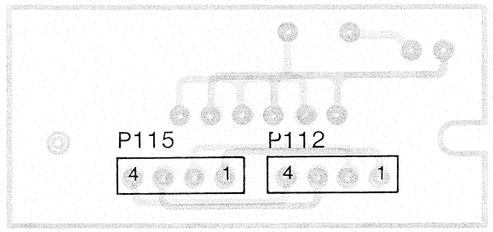

P.C. Board Location

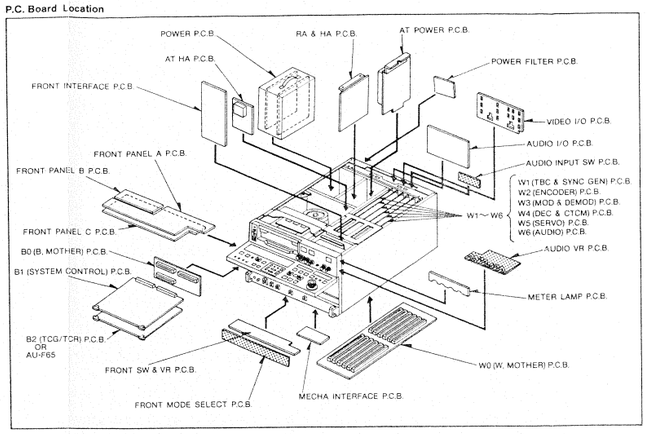

-62
Jsed
Jsed

AUDIO OUTPUT SW	
FOIL SIDE	
CONNECTOR	
CN260	A-3
CN262	A-4

ADDRESS INFORMATION

MODE SELECT CIRCUIT		
IDE	CONNECTOR	
TOR	CN180	A-2
A-4	CN181	A-11
A-4	P153	A-10
B-9	P155	A-9
A-11		
CIRCUIT		
B-10		

FORMATION

MODEL / TYPE	AU-665	AU-65	AU-63	AU-62
NTSC	VEP00E30A	VEP00E30A	VEP00E30A	VEP00E30A
PAL	VEP00E30A	VEP00E30A	VEP00E30A	VEP00E30A

CASSETTE DETECT P.C.BOARD

(FOIL SIDE)

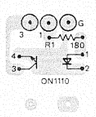

MODEL / TYPE	AU-665	AU-65	AU-63	AU-62
NTSC	VEP00E08C	VEP00E08C	VEP00E08C	VEP00E08C
PAL	VEP00E08C	VEP00E08C	VEP00E08C	VEP00E08C

AUTO OFF LED P.C.BOARD

(FOIL SIDE)

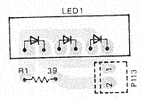

MODEL / TYPE	AU-665	AU-65	AU-63	AU-62
NTSC	VEP80232A	VEP80232A	VEP80232A	VEP80232A
PAL	VEP80232A	VEP80232A	VEP80232A	VEP80232A

EJECT SW P.C.BOARD

(FOIL SIDE)

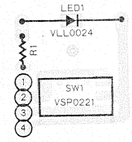

AU-665	AU-65	AU-63	AU-62
EP80559B	VEP80559A	VEP80559D	VEP80559C
EP80559B	VEP80559A	VEP80559D	VEP80559C

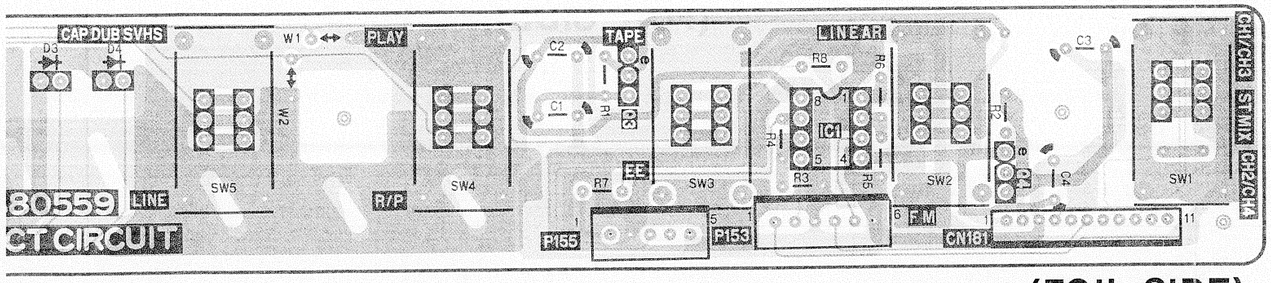

(FOIL SIDE)

MODEL / TYPE	AU-665	AU-65	AU-63	AU-62
NTSC	VEP00E72A	VEP00E72A	VEP00E72A	VEP00E72A
PAL	VEP00E72A	VEP00E72A	VEP00E72A	VEP00E72A

CASSETTE CARRIAGE LAMP P.C.BOARD

(FOIL SIDE)

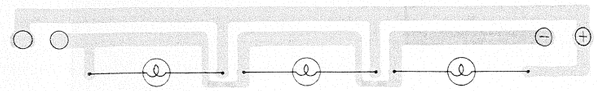

6 7 8 9 10 11 12

REVERSE SIDE

FRONT INTERFACE P.C.BOARD

FRONT INTERFACE P.C.BOARD)

TYPE \ MODEL	AU-665	AU-65	AU-63	AU-62
NTSC	VEP80612A	See Next Page		
PAL	——			

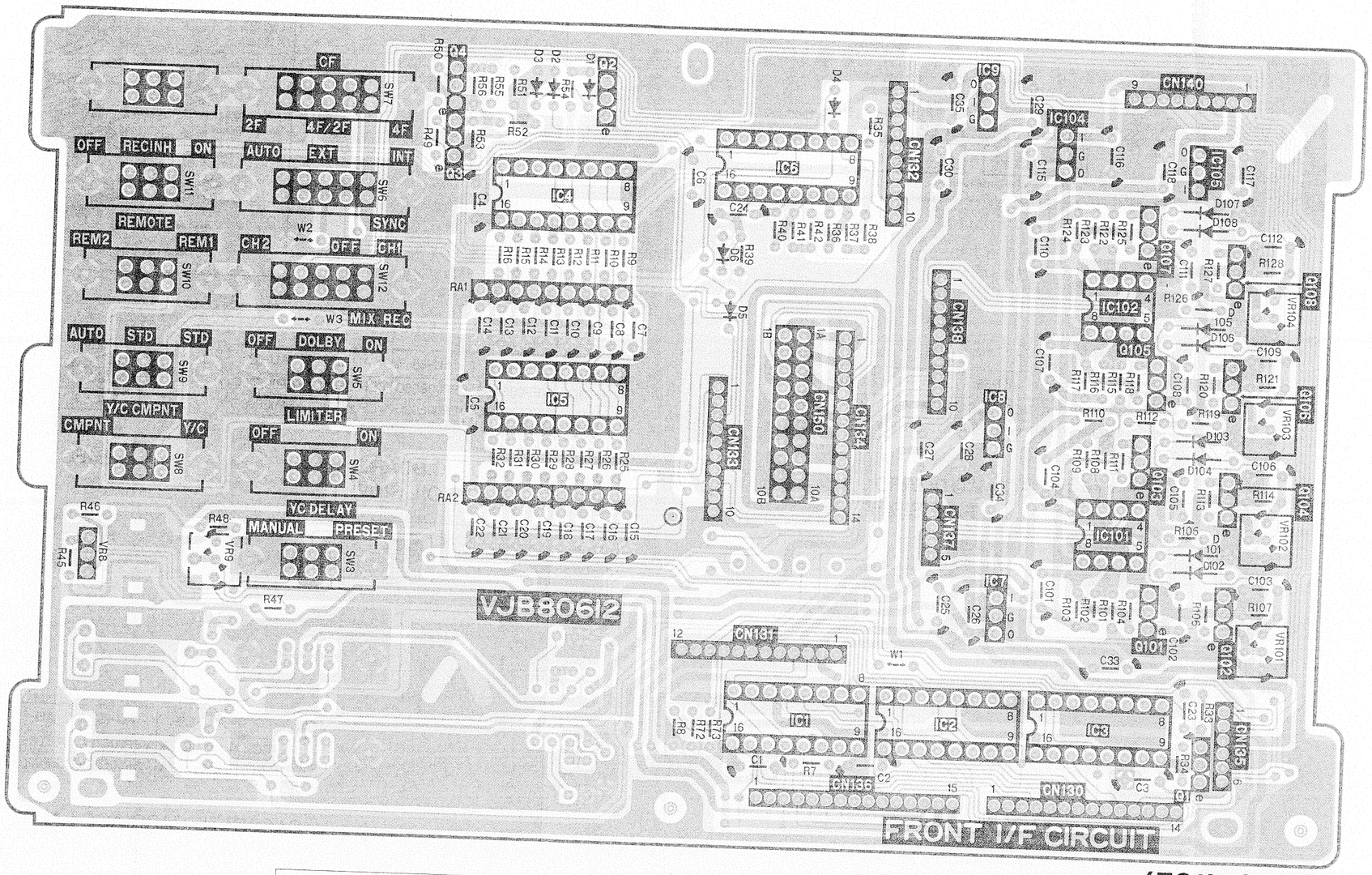

(FOIL SIDE)

CHIP PART INFORMATION

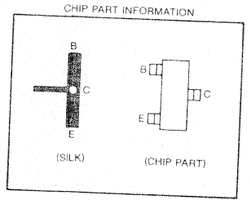

FLONT INTERFACE

FOIL SIDE									
TRANSISTOR									
Q1	C-8	Q106	E-8	IC8	E-7	VR103	E-9	CN138	E-6
Q2	G-4	Q107	F-8	IC9	G-7	VR104	F-9	CN140	G-8
Q3	G-3	Q108	F-8	IC101	D-8	CONNECTOR		CN150	E-6
Q4	G-3	INTEGRATED CIRCUIT		IC102	F-8	CN130	C-7		
Q101	D-8	IC1	C-6	IC104	G-7	CN131	C-5		
Q102	D-8	IC2	C-7	IC105	G-8	CN132	G-6		
Q103	E-8	IC3	C-8	ADJUSTMENT		CN133	E-5		
Q104	E-8	IC4	F-4	VR8	D-1	CN134	E-6		
Q105	E-8	IC5	E-4	VR9	D-2	CN135	C-8		
		IC6	F-5	VR101	D-9	CN136	C-6		
		IC7	D-7	VR102	D-9	CN137	D-7		

ADDRESS INFORMATION

5-3-20

FRONT INTERFACE P.C.BOARD

TYPE \ MODEL	AU-665	AU-65	AU-63	AU-62
NTSC	See Front Page	VEP80553A	VEP80553C	VEP80553B
PAL	———	VEP80631A	VEP80631B	VEP80631C

CHIP PART INFORMATION

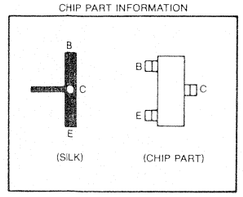

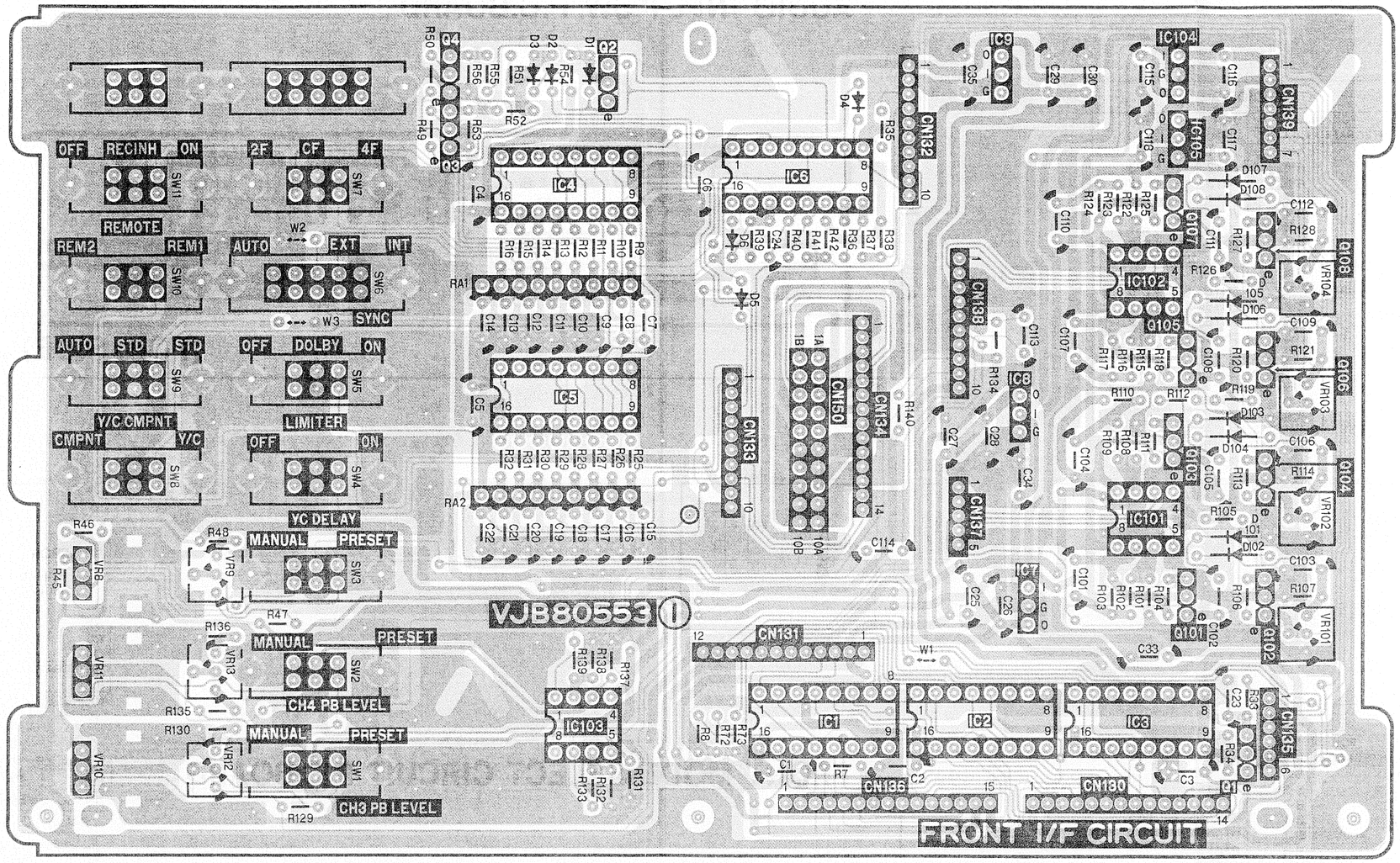

(FOIL SIDE)

FRONT INTERFACE									
FOIL SIDE		Q106	E-8	IC8	E-7	VR11	C-1	CN133	E-5
TRANSISTOR		Q107	F-8	IC9	G-7	VR12	C-2	CN134	E-6
Q1	C-8	Q108	F-8	IC101	D-8	VR13	C-2	CN135	C-8
Q2	G-4	INTEGRATED CIRCUIT		IC102	F-8	VR101	D-9	CN136	C-6
Q3	G-3	IC1	C-6	IC103	C-4	VR102	D-9	CN137	D-6
Q4	G-3	IC2	C-7	IC104	G-8	VR103	E-9	CN138	E-6
Q101	D-8	IC3	C-8	IC105	G-8	VR104	F-9	CN139	G-8
Q102	D-8	IC4	F-4	ADJUSTMENT		CONNECTOR		CN150	E-6
Q103	E-8	IC5	E-4	VR8	D-1	CN130	C-7		
Q104	E-8	IC6	F-5	VR9	D-2	CN131	C-5		
Q105	E-8	IC7	D-7	VR10	C-1	CN132	G-6		

ADDRESS INFORMATION

65	AU-65	AU-63	AU-62
Page	VEP80553A	VEP80553C	VEP80553B
—	VEP80631A	VEP80631B	VEP80631C

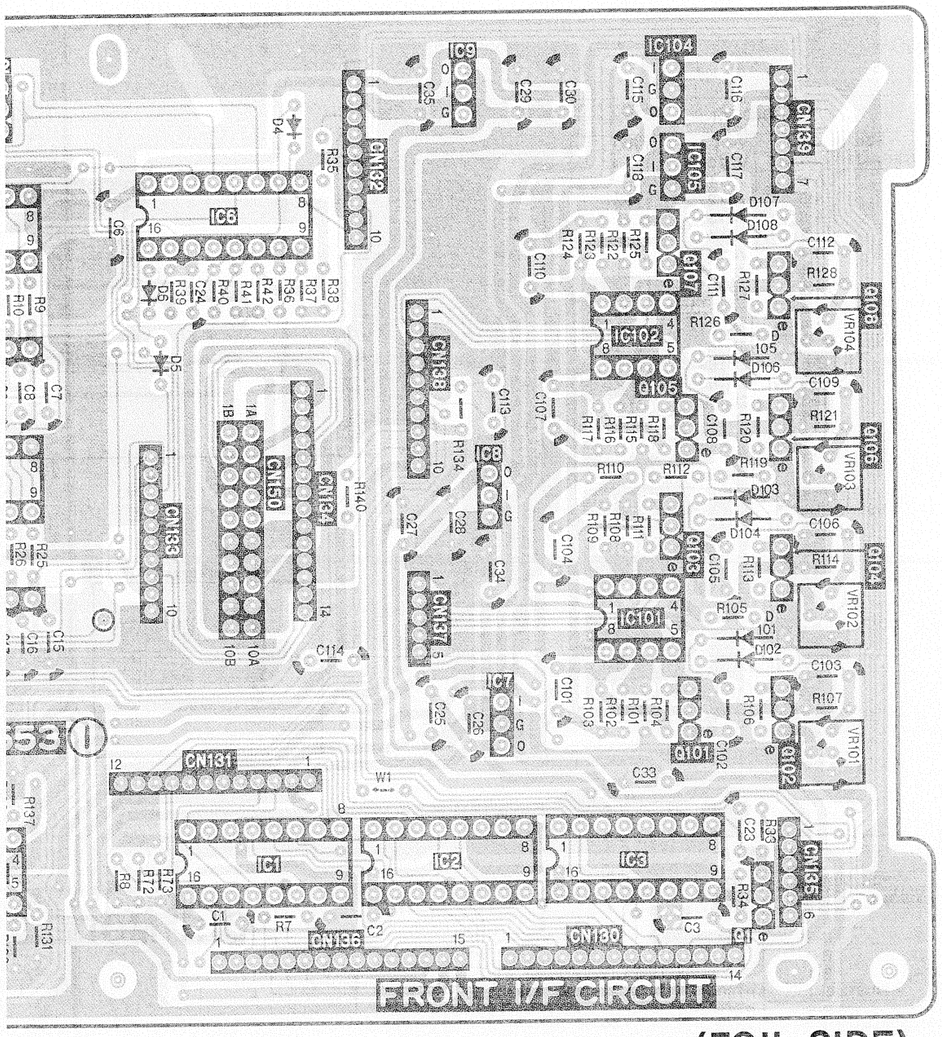

(FOIL SIDE)

FRONT INTERFACE					
IC8	E-7	VR11	C-1	CN133	E-5
IC9	G-7	VR12	C-2	CN134	E-6
IC101	D-8	VR13	C-2	CN135	C-8
IC102	F-8	VR101	D-9	CN136	C-6
IC103	C-4	VR102	D-9	CN137	D-6
IC104	G-8	VR103	E-9	CN138	E-6
IC105	G-8	VR104	F-9	CN139	G-8
ADJUSTMENT		CONNECTOR		CN150	E-6
VR8	D-1	CN130	C-7		
VR9	D-2	CN131	C-5		
VR10	C-1	CN132	G-6		

5 6 7 8 9

P.C. Board Location

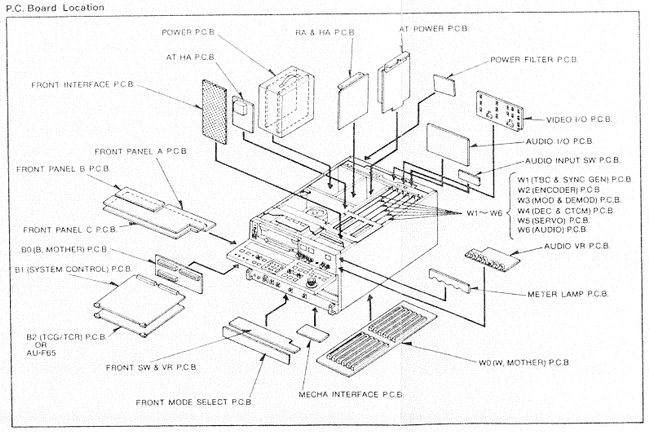

FRONT PANEL A P.C.BOARD

TYPE \ MODEL	AU-665	AU-65	AU-63	AU-62
NTSC	VEP66052C	See Next Page		
PAL	——			

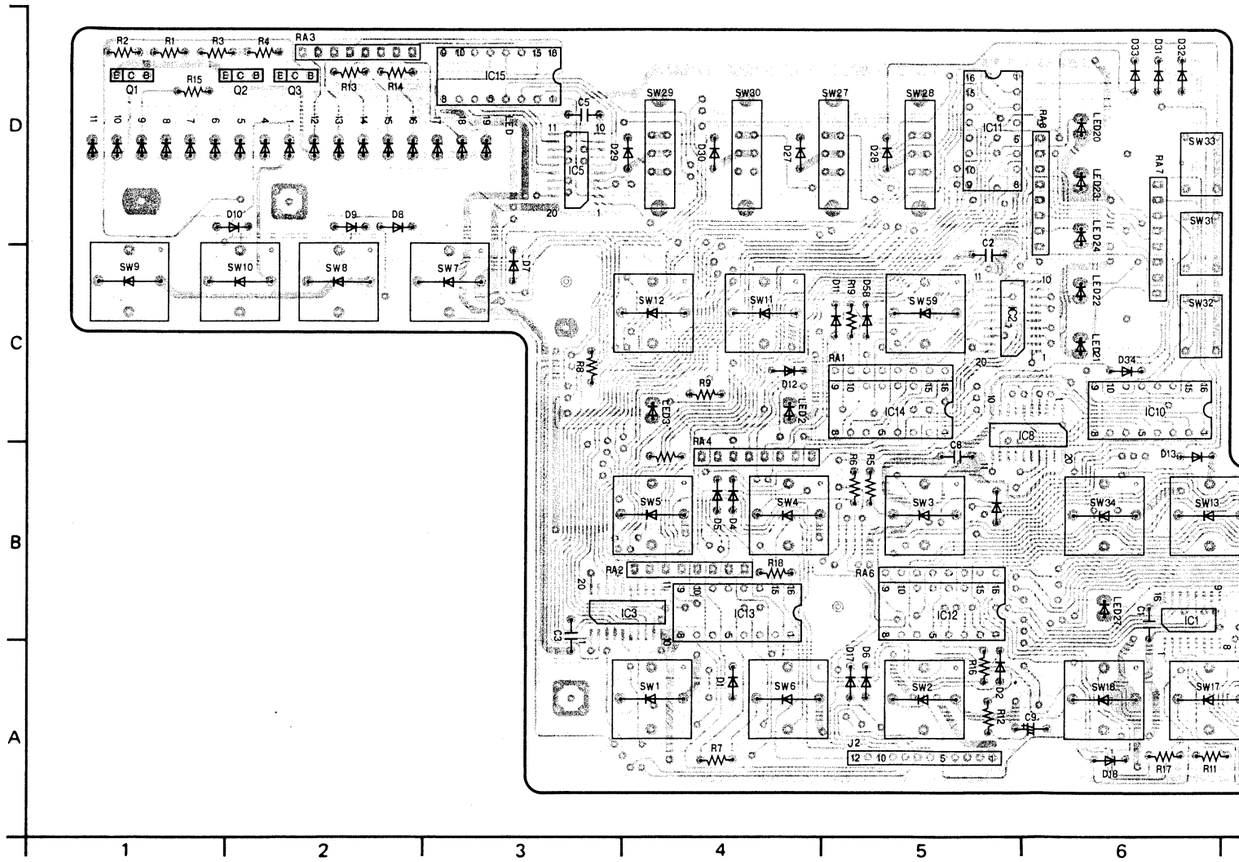

FRONT PANEL(A) P.C.BOARD

Q1	D-1
Q2	D-2
Q3	D-2
IC1	B-6
IC2	C-5
IC3	B-4
IC4	A-11
IC5	D-3
IC6	B-10
IC7	B-8
IC8	C-6
IC9	B-10
IC10	C-6
IC11	D-5
IC12	B-5
IC13	B-4
IC14	C-5
IC15	D-3
J2	A-5
J3	A-8
J4	A-10

ADDRESS INPORMATION

P.C. Board Location

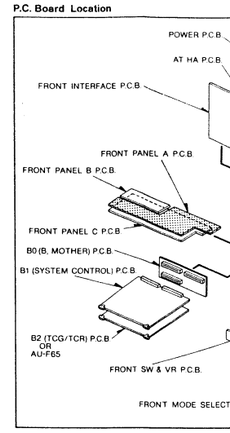

P.C. Board Location

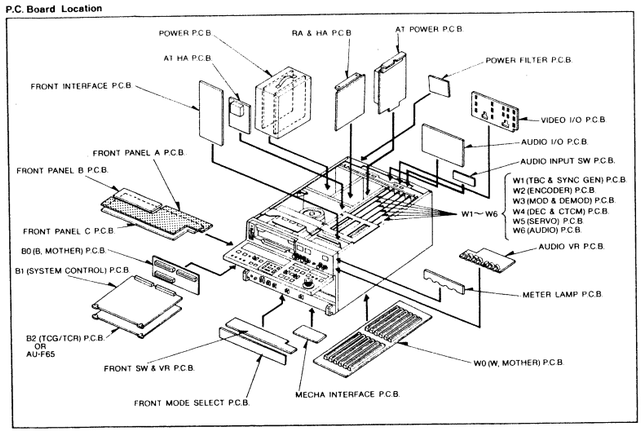

FRONT PANEL A P.C.BOARD

TYPE \ MODEL	AU-665	AU-65	AU-63	AU-62
NTSC	See Front Page	VEP86050C	See Next Page	
PAL	———	VEP86050D		

(FOIL SIDE)

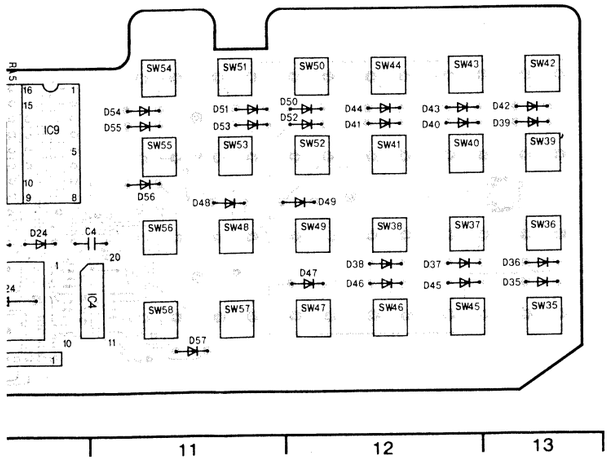

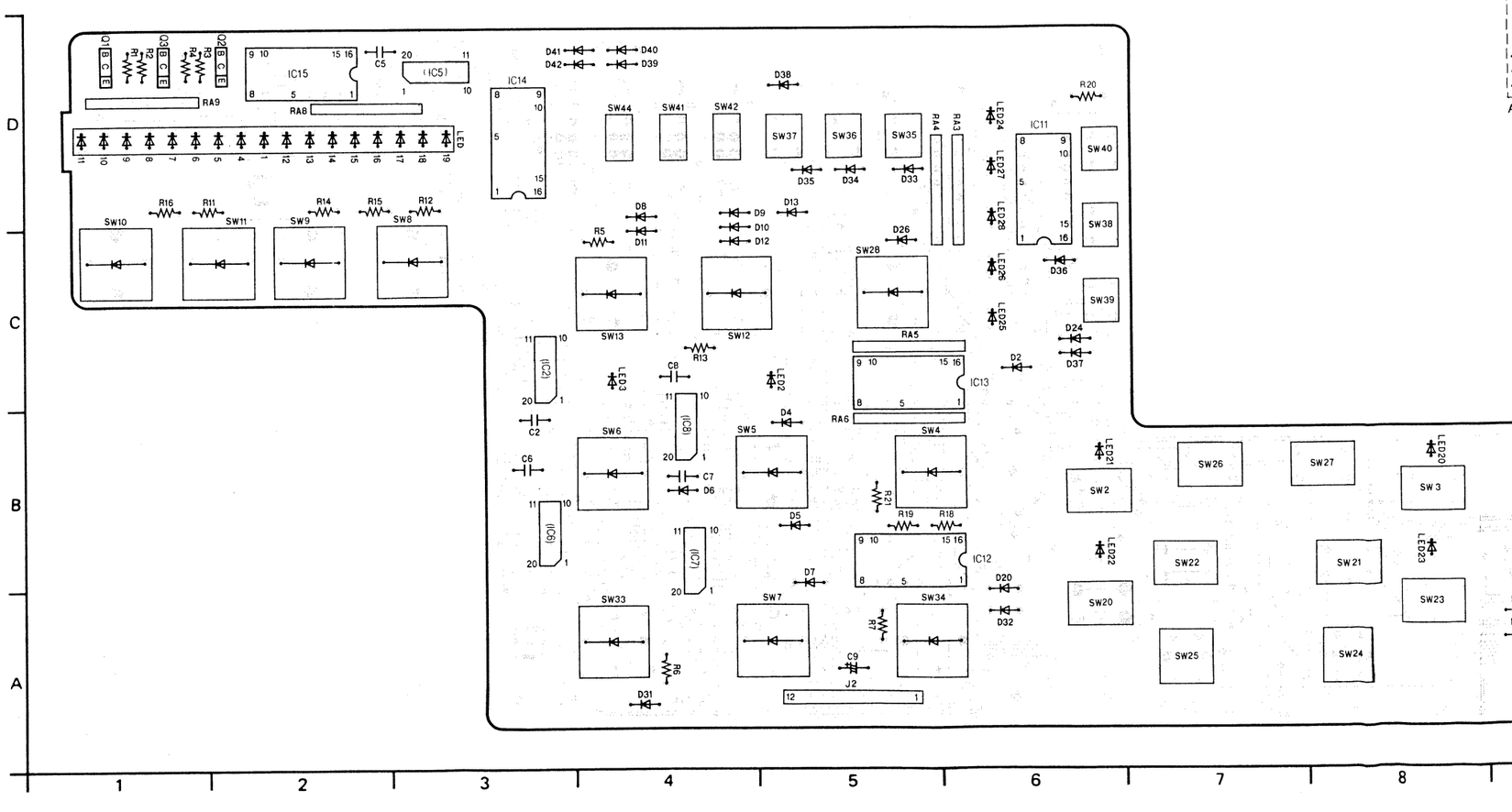

PANEL A P.C.BOARD

TYPE \ MODEL	AU-665	AU-65	AU-63	AU-62
NTSC	See Front Page	VEP86050C	See Next Page	
PAL	——	VEP86050D		

FRONT PANEL(A) P.C.BOARD

Q1	D-1
Q2	D-2
Q3	D-1
IC1	A-10
IC2	C-3
IC3	B-11
IC4	A-11
IC5	D-3
IC6	B-3
IC7	B-4
IC8	B-4
IC9	B-11
IC10	B-10
IC11	D-6
IC12	B-5
IC13	C-5
IC14	D-3
IC15	D-2
J2	A-5
J3	A-10
J4	A-11

ADDRESS INFORMATION

CHIP PART INFORMATION

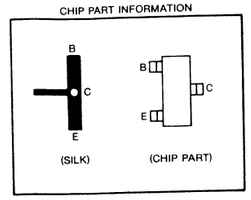

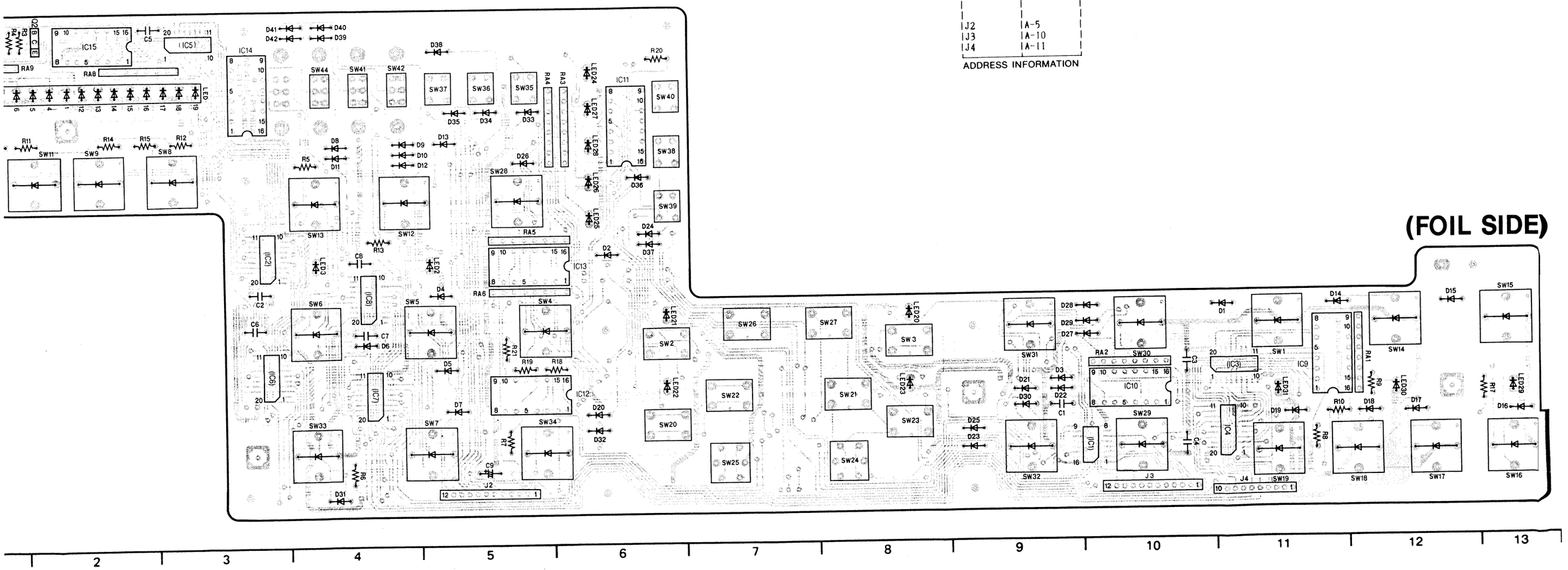

REVERSE SIDE

FRONT PANEL A P.C.BOARD
FRONT PANEL B P.C.BOARD

FRONT PANEL B P.C.BOARD

TYPE \ MODEL	AU-665	AU-65	AU-63	AU-62
NTSC	VEP66022A	VEP66022A	See Front Page	
PAL	VEP66022A	VEP66022A		

(FOIL SIDE)

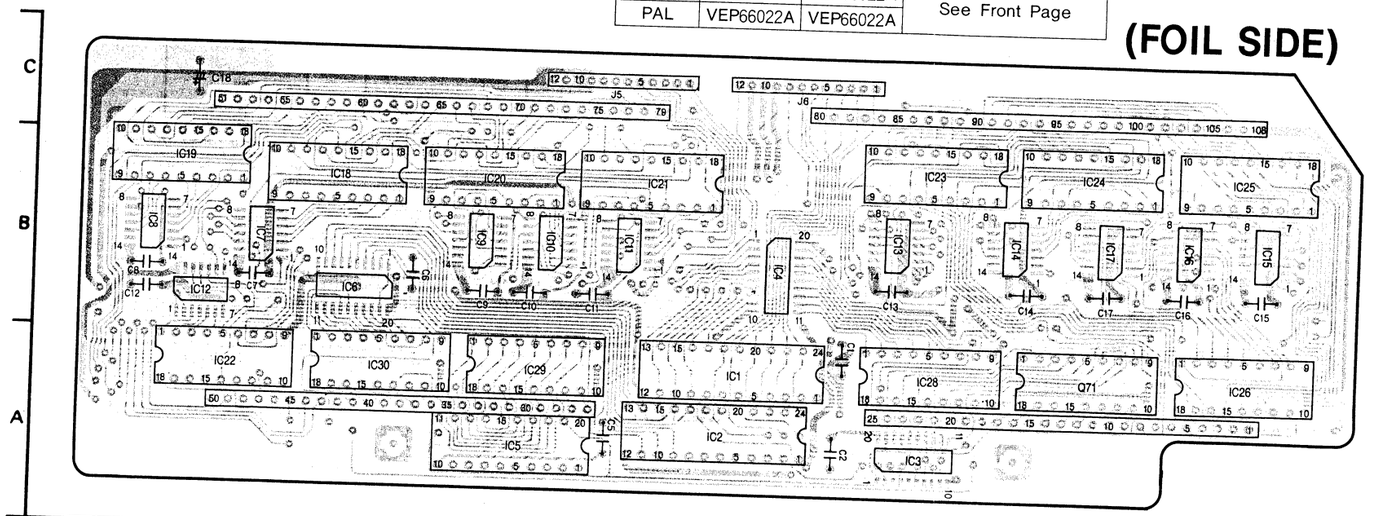

FRONT PANEL(B) P.C.BOARD

IC1	A-4
IC2	A-4
IC3	A-5
IC4	B-4
IC5	A-3
IC6	B-2
IC7	B-2
IC8	B-1
IC9	B-3
IC10	B-3
IC11	B-3
IC12	B-1
IC13	B-5
IC14	B-5
IC15	B-7
IC16	B-6
IC17	B-6
IC18	B-2
IC19	B-1
IC20	B-3
IC21	B-4
IC22	A-1
IC23	B-5
IC24	B-6
IC25	B-7
IC26	A-7
IC28	A-5
IC29	A-3
IC30	A-2
IC71	A-6
J5	C-3
J6	C-4

ADDRESS INFORMATION

P.C. Board Location

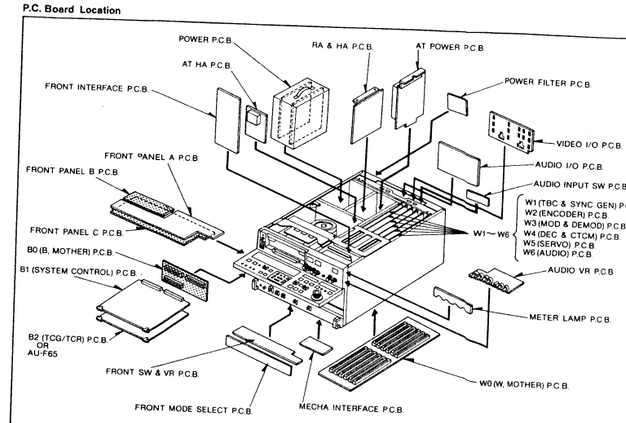

FRONT PANEL C P.C.BOARD

TYPE \ MODEL	AU-665	
NTSC	VEP66053E	See
PAL	———	

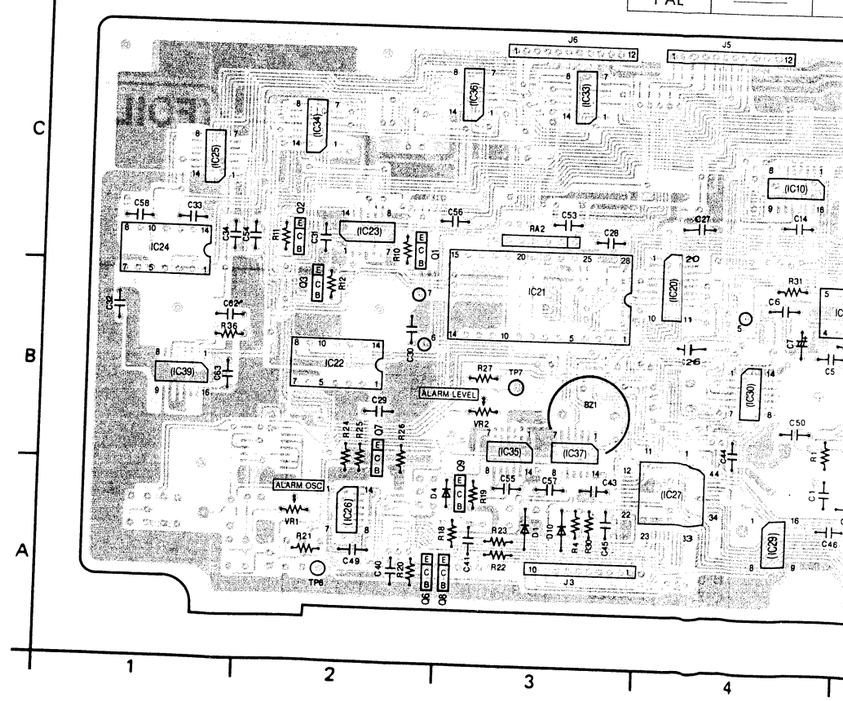

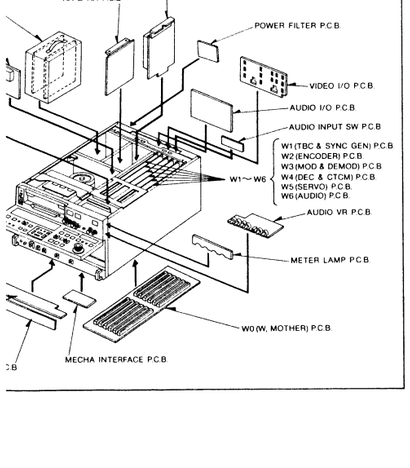

FRONT PANEL(C) P.C.BOARD <VEP66053>

Q1	F-2	IC12	F-7	IC37	E-3
Q2	F-2	IC13	G-8	IC38	G-9
Q3	F-2	IC14	G-8	IC39	F-1
Q4	E-8	IC15	G-7		
Q5	E-8	IC16	G-7		
Q6	E-6	IC17	G-6	TP2	G-9
Q7	E-2	IC18	G-6	TP3	G-9
Q8	E-3	IC19	G-5	TP4	E-8
Q9	E-3	IC20	F-4	TP6	E-2
Q10	F-8	IC21	F-3	TP7	F-3
Q11	G-9	IC22	F-2		
		IC23	F-2	TPG1	F-8
		IC24	F-1		
		IC25	G-1		
IC1	E-5	IC26	E-2	VR1	E-2
IC2	E-5	IC27	E-4	VR2	F-3
IC3	F-5	IC28	E-7		
IC4	F-6	IC29	E-4	P150	G-10
IC5	F-6	IC30	F-4		
IC6	F-6	IC31	G-10	J1	F-9
IC7	F-6	IC32	E-5	J2	E-8
IC8	G-5	IC33	G-3	J3	E-3
IC9	G-4	IC34	G-2	J4	E-5
IC10	E-7	IC35	E-3	J5	G-4
IC11		IC36	G-3	J6	G-3

ADDRESS INFORMATION

CHIP PART INFORMATION

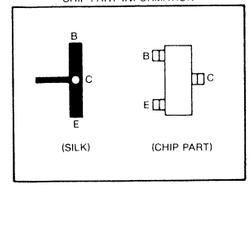

C.BOARD

TYPE \ MODEL	AU-665	AU-65	AU-63	AU-62
NTSC	VEP66053E	See Next Page	Not Used	
PAL	———			

(FOIL SIDE)

FRONT PANEL C P.C.BOARD

TYPE \ MODEL	AU-665	AU
NTSC	See Front Page	VEP6
PAL	———	VEP6

IC37	E-3
IC38	G-9
IC39	F-1
TP2	G-9
TP3	G-9
TP4	E-8
TP6	E-2
TP7	F-3
TPG1	E-8
VR1	E-2
VR2	F-3
P150	G-10
J1	F-9
J2	E-8
J3	E-3
J4	E-5
J5	G-4
J6	G-3

ADDRESS INFORMATION

CHIP PART INFORMATION

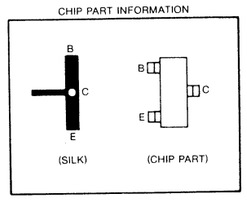

FRONT PANEL(C) P.C.BOARD

Q1	C-2
Q2	C-2
Q3	B-2
Q4	A-8
Q5	A-8
Q6	A-2
Q7	A-1
Q8	A-2
Q9	A-2
Q10	B-8
Q11	C-9
IC1	A-5
IC2	A-5
IC3	B-5
IC4	B-6
IC5	C-7
IC6	B-6
IC7	B-8
IC8	B-6
IC9	C-5
IC10	C-4
IC11	A-7
IC12	C-7
IC13	C-8
IC14	C-8
IC15	C-7
IC16	C-7
IC17	C-6
IC18	C-6
IC19	C-5
IC20	B-4
IC21	B-3
IC22	B-2
IC23	C-2
IC24	C-1
IC25	C-1
IC26	B-2
IC27	A-4
IC28	A-7
IC29	A-2
IC30	B-4
IC31	C-10
IC32	B-5
IC33	C-3
IC34	C-2
IC35	B-3
IC36	C-3

<VEP86048A>

IC37	B-3
IC38	C-9
IC39	B-1
TP6	D-9
TP7	D-9
TP12	A-9
TP13	A-9
TP14	A-1
TP15	B-3
TPG1	A-4
VR1	A-2
VR2	B-3
J1	B-9
J2	A-8
J3	A-3
J4	A-3
J5	D-4
J6	D-3

ADDRESS INFORMATION

FRONT PANEL C P.C.BOARD

MODEL / TYPE	AU-665	AU-65	AU-63	AU-62
NTSC	See Front Page	VEP86048F	Not Used	
PAL	———	VEP86048G		

(FOIL SIDE)

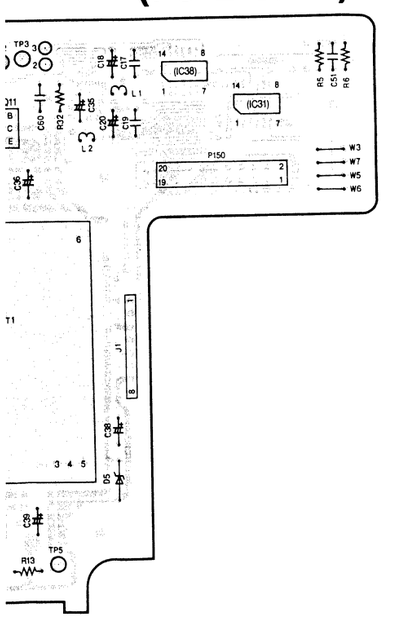

(FOIL SIDE)

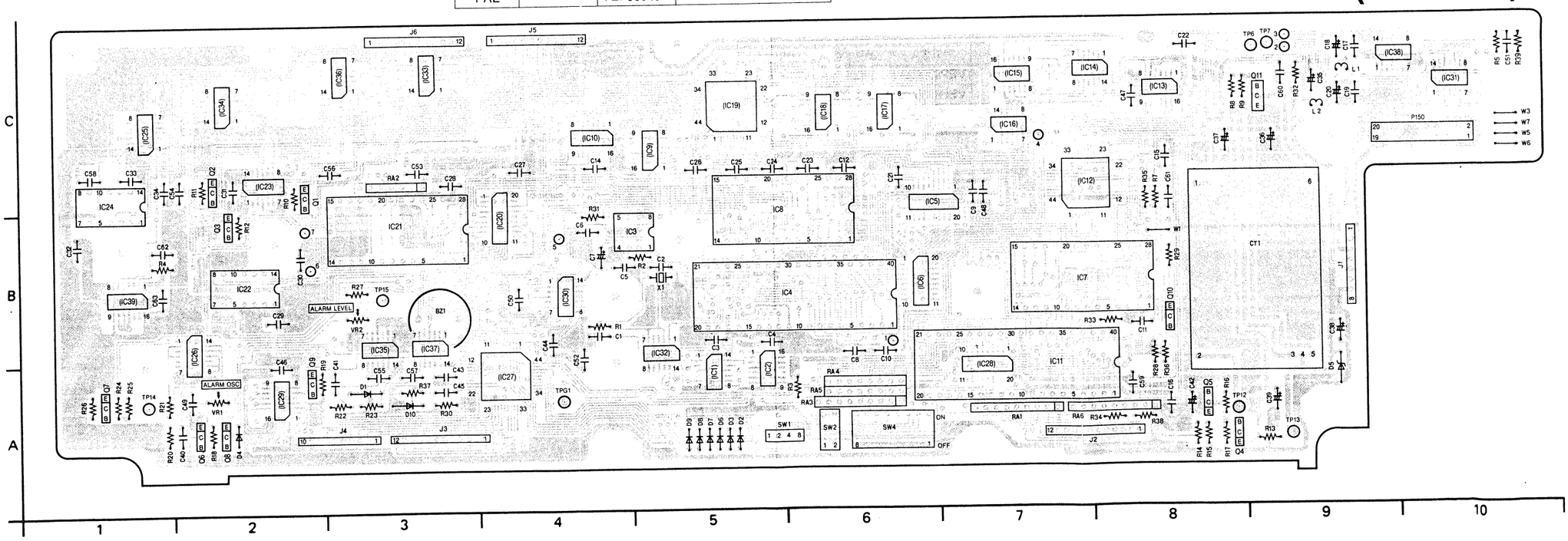

REVERSE SIDE

FRONT SW VR P.C.BOARD
MECHA INTERFACE P.C.BOARD

TYPE \ MODEL	AU-665	AU-65	AU-63	AU-62
NTSC	VYK3004	VYK3004	VYK3004	VYK3004
PAL	VYK3637	VYK3637	VYK3637	VYK3637

POWER SUPPLY A P.C.BOARD

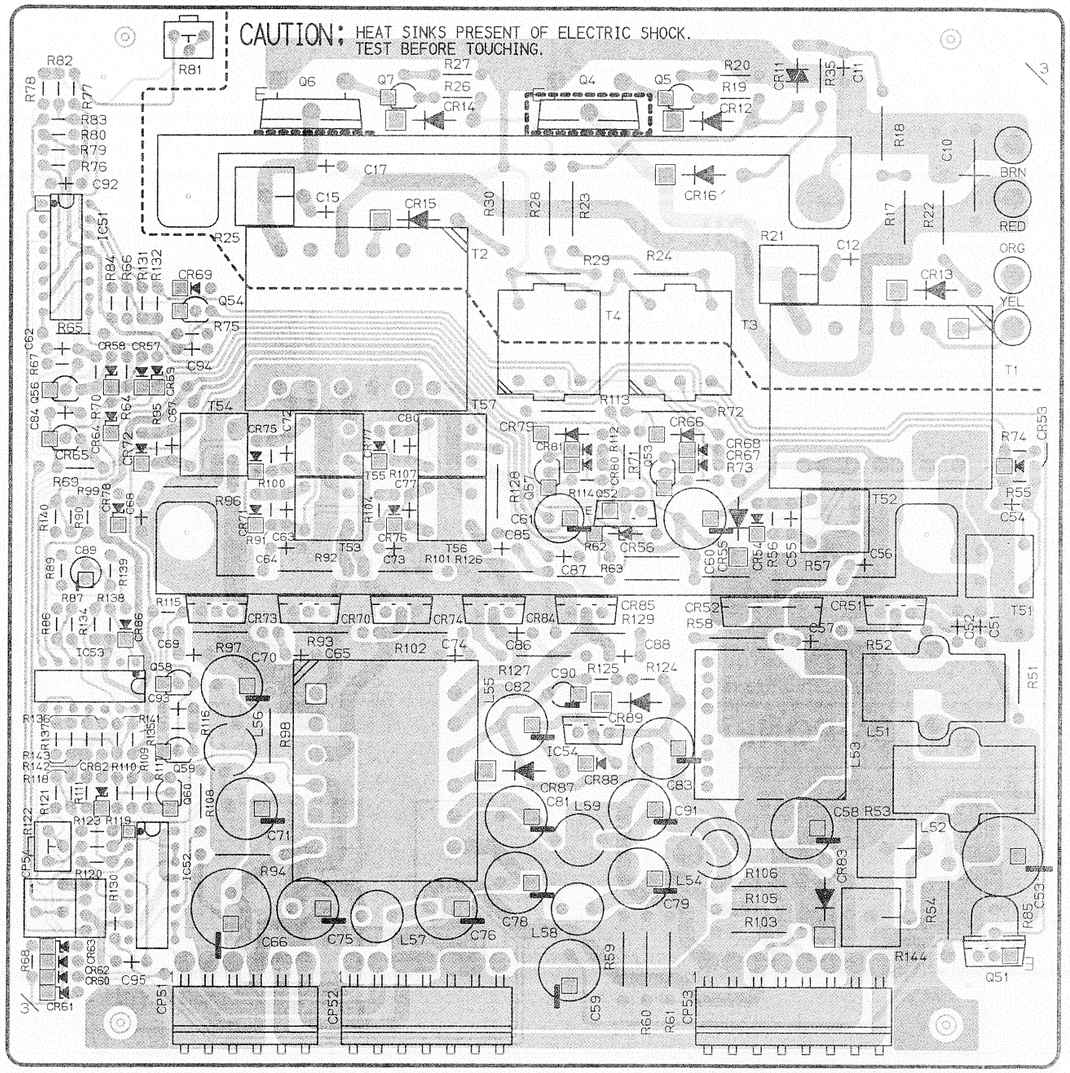

(COMPONENT SIDE)

POWER SUPPLY B P.C.BOARD

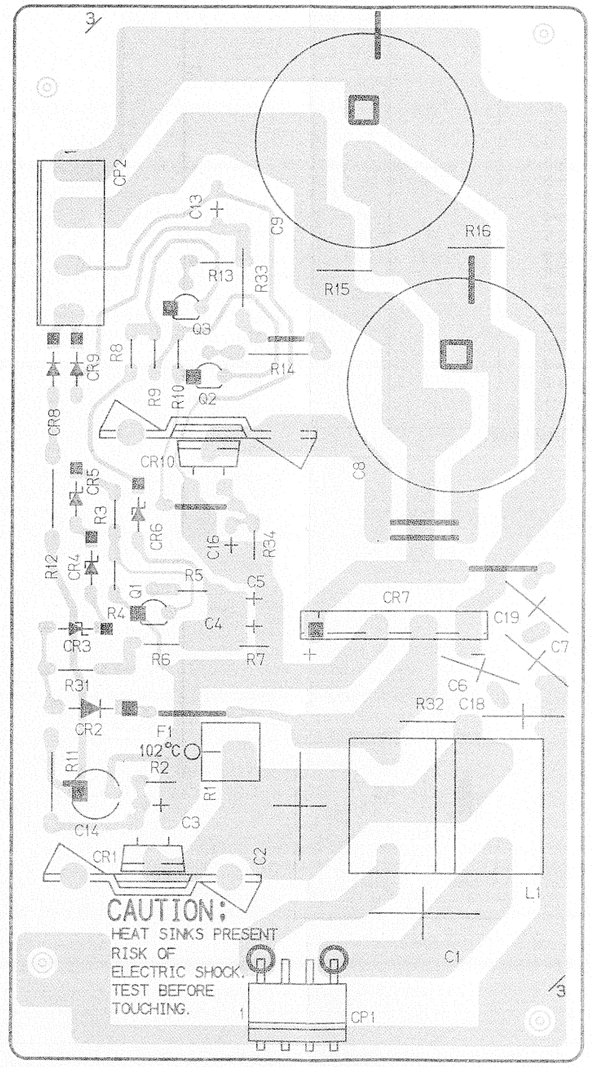

(COMPONENT SIDE)

POWER (VYK 30				
IC				D58
IC51	E-1	DIODE		D59
IC52	B-2	D1	B-8	D60
IC53	C-1	D2	C-8	D61
IC54	C-4	D3	C-8	D62
		D4	D-8	D63
		D5	D-8	D64
TRANSISTOR		D6	D-8	D65
Q1	C-8	D7	C-9	D66
Q2	E-8	D8	E-8	D67
Q3	E-8	D9	E-8	D68
Q4	F-4	D10	D-9	D69
Q5	F-4	D11	F-5	D70
Q6	F-2	D12	F-4	D71
Q7	F-3	D13	E-5	D72
Q51	B-6	D14	F-3	D73
Q52	D-4	D15	E-3	D74
Q53	D-4	D16	F-4	D75
Q54	E-2	D51	C-5	D76
Q56	E-1	D52	C-5	D77
Q57	D-4	D53	D-6	D78
Q58	C-2	D54	D-5	D79
Q59	C-2	D55	D-4	D80
Q60	B-2	D56	D-4	D81
		D57	E-1	D82

OARD

SIDE)

POWER FILTER P.C.BOARD

TYPE \ MODEL	AU-665	AU-65	AU-63	AU-62
NTSC	VEP81042A	VEP81042A	VEP81042A	VEP81042A
PAL	VEP81058A	VEP81058A	VEP81058A	VEP81058A

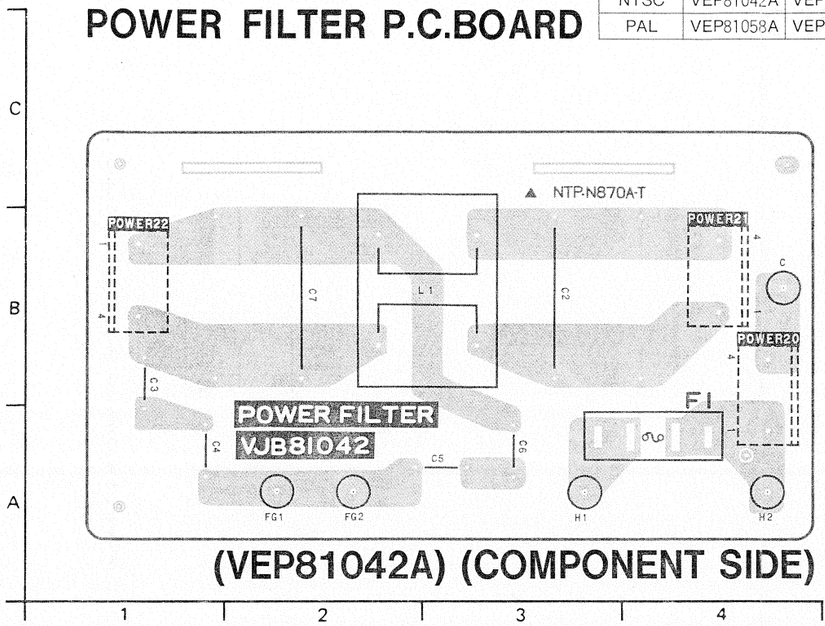

(VEP81042A) (COMPONENT SIDE)

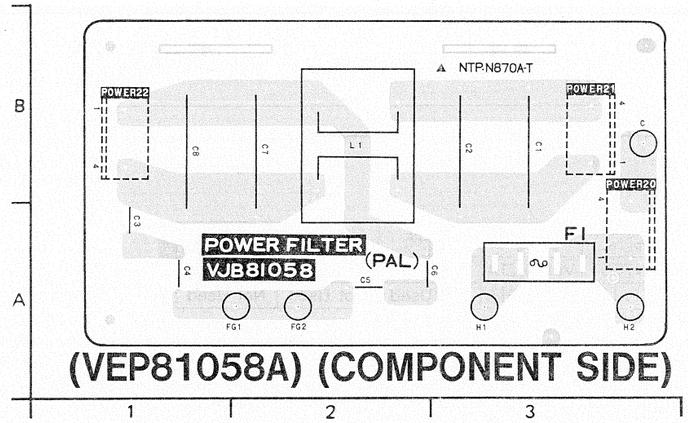

(VEP81058A) (COMPONENT SIDE)

P.C. Board Location

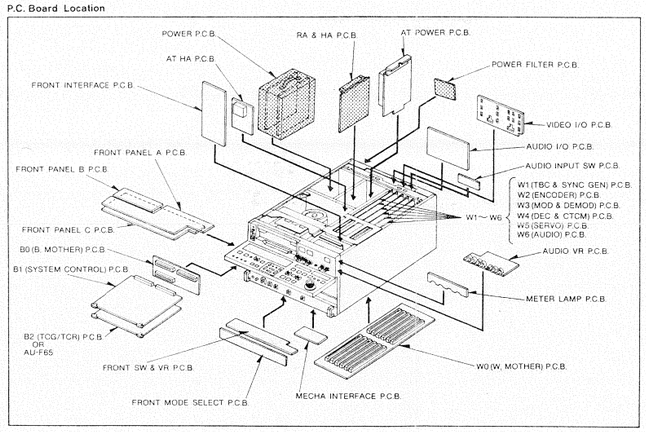

POWER (VYK 3004)							
IC				D58	E-1	D83	B-5
IC51	E-1	**DIODE**		D59	E-2	D84	C-3
IC52	B-2	D1	B-8	D60	B-1	D85	C-4
IC53	C-1	D2	C-8	D61	B-1	D86	C-1
IC54	C-4	D3	C-8	D62	B-1	D87	C-3
		D4	D-8	D63	B-1	D88	C-4
		D5	D-8	D64	D-1	D89	C-4
TRANSISTOR		D6	D-8	D65	D-1	D90	
Q1	C-8	D7	C-9	D66	D-4		
Q2	E-8	D8	E-8	D67	D-4		
Q3	E-8	D9	E-8	D68	D-4	**CONNECTOR**	
Q4	F-4	D10	D-9	D69	E-2	P1	A-9
Q5	F-4	D11	F-5	D70	C-2	P2	E-8
Q6	F-2	D12	F-4	D71	D-2	P51	A-2
Q7	F-3	D13	E-5	D72	D-1	P52	A-3
Q51	B-6	D14	F-3	D73	C-2	P53	A-5
Q52	D-4	D15	E-3	D74	C-3	P54	
Q53	D-4	D16	F-4	D75	D-2		
Q54	E-2	D51	C-5	D76	D-3		
Q56	E-1	D52	C-5	D77	D-3	**VARIABLE RESISTOR**	
Q57	D-4	D53	D-6	D78	D-1	VR81	F-2
Q58	C-2	D54	D-5	D79	D-4	VR122	B-1
Q59	C-2	D55	D-4	D80	D-4		
Q60	B-2	D56	D-4	D81	D-4		
		D57	E-1	D82	C-1		

RA.HA P.C.BOARD

TYPE \ MODEL	AU-665	AU-65	AU-63	AU-62
NTSC	VEP85015A	VEP85015A	VEP85015C	VEP85015
PAL	VEP85015D	VEP85015D	VEP85015F	VEP85015

(FOIL SID

CHIP PART INFORMATION

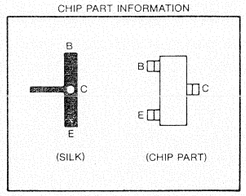

FOIL SIDE		Q10	A-2	Q205	B-2	Q216	B-4
TRANSISTOR		Q11	B-2	Q206	B-3	Q217	D-1
Q1	E-1	Q12	B-2	Q207	B-2	Q218	D-1
Q2	E-1	Q13	B-5	Q208	B-3	Q219	C-1
Q3	E-2	Q14	B-5	Q209	B-4	Q220	C-2
Q4	E-2	Q15	B-5	Q210	B-4	Q221	C-2
Q5	E-2	Q16	A-5	Q211	B-4	Q222	D-3
Q6	E-3	Q201	B-3	Q212	B-4	Q223	D-3
Q7	E-4	Q202	B-3	Q213	B-4	Q224	D-4
Q8	E-5	Q203	B-3	Q214	B-4	Q225	D-4
Q9	A-2	Q204	B-3	Q215	B-4		

ADDRESS INFORMATION

POWER SUPPLY A P.C.B
POWER SUPPLY B P.C.B
POWER FILTER P.C.BOAR
RA. HA P.C.BOARD

	AU-665	AU-65	AU-63	AU-62
	VEP81042A	VEP81042A	VEP81042A	VEP81042A
	VEP81058A	VEP81058A	VEP81058A	VEP81058A

RA.HA P.C.BOARD

TYPE \ MODEL	AU-665	AU-65	AU-63	AU-62
NTSC	VEP85015A	VEP85015A	VEP85015C	VEP85015B
PAL	VEP85015D	VEP85015D	VEP85015F	VEP85015E

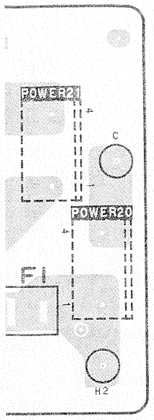

NT SIDE)

4

COMPONENT SIDE)

3

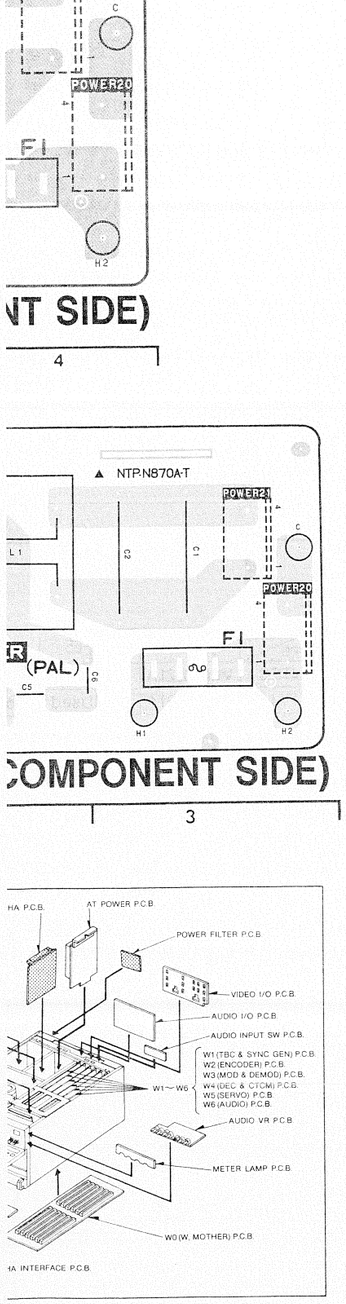

(FOIL SIDE)

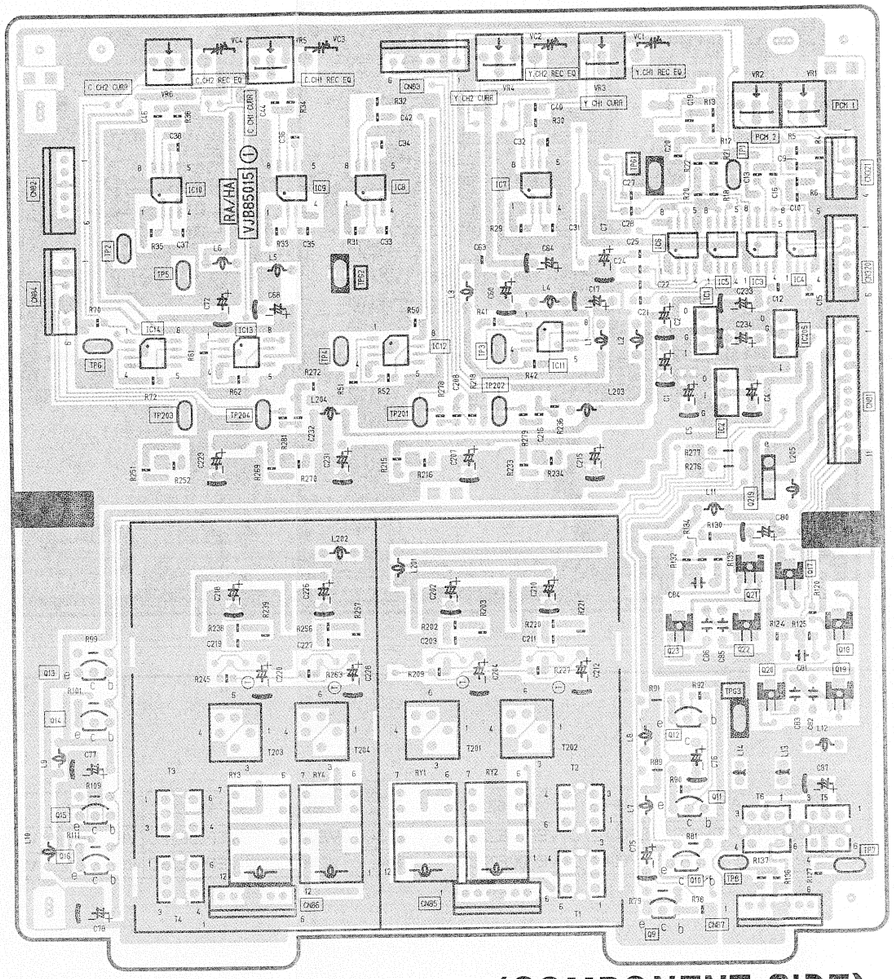

(COMPONENT SIDE)

E
D
C
B
A

1 2 3 4 5 6 7 8 9 10

CHIP PART INFORMATION

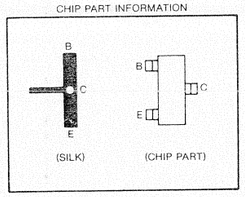

RA. HA

FOIL SIDE		Q10	A-2	Q205	B-2	Q216	B-4
TRANSISTOR		Q11	B-2	Q206	B-3	Q217	D-1
Q1	E-1	Q12	B-2	Q207	B-2	Q218	D-1
Q2	E-1	Q13	B-5	Q208	B-3	Q219	C-1
Q3	E-2	Q14	B-5	Q209	B-4	Q220	C-2
Q4	E-2	Q15	B-5	Q210	B-4	Q221	C-2
Q5	E-2	Q16	A-5	Q211	B-4	Q222	D-3
Q6	E-3	Q201	B-3	Q212	B-4	Q223	D-3
Q7	E-4	Q202	B-3	Q213	B-4	Q224	D-4
Q8	E-5	Q203	B-3	Q214	B-4	Q225	D-4
Q9	A-2	Q204	B-3	Q215	B-4		

INTEGRATED CIRCUIT		TP3	D-3
IC1	D-2	TP4	D-4
IC2	D-2	TP5	D-4
IC201	C-3	TP6	D-5
IC202	C-3	TP7	A-1
IC203	C-4	TP8	A-2
IC204	C-4	TP201	D-3
IC205	D-1	TP202	D-3
TEST POINT		TP203	D-4
TP1	E-2	TP204	D-4
TP2	D-5	TPG1	E-2

TPG2	D-4
TPG3	B-2
ADJUSTMENT	
VR1	E-1
VR2	E-1
VR3	E-2
VR4	E-3
VR5	E-4
VR6	E-4
CONNECTOR	
CN81	D-1

CN82	E-5
CN83	E-3
CN84	D-5
CN85	A-3
CN86	A-4
CN87	A-1
CN320	D-1
CN321	E-1

COMPONENT SIDE		IC4	D-10
TRANSISTOR		IC5	D-9
Q17	C-10	IC6	D-9
Q18	C-10	IC7	E-8
Q19	B-10	IC8	E-8
Q20	B-10	IC9	E-7
Q21	C-10	IC10	E-7
Q22	C-10	IC11	D-9
Q23	C-9	IC12	D-8
INTEGRATED CIRCUIT		IC13	D-7
IC3	D-10	IC14	D-7

ADDRESS INFORMATION

REVERSE SIDE

VIDEO I/O P.C.BOARD
50P REMOTE P.C.BOA

5-3-25

VIDEO I/O P.C.BOARD

TYPE \ MODEL	AU-665	AU-65	AU-63	AU-62
NTSC	VEP83104A	See Next Page		
PAL	VEP83104B			

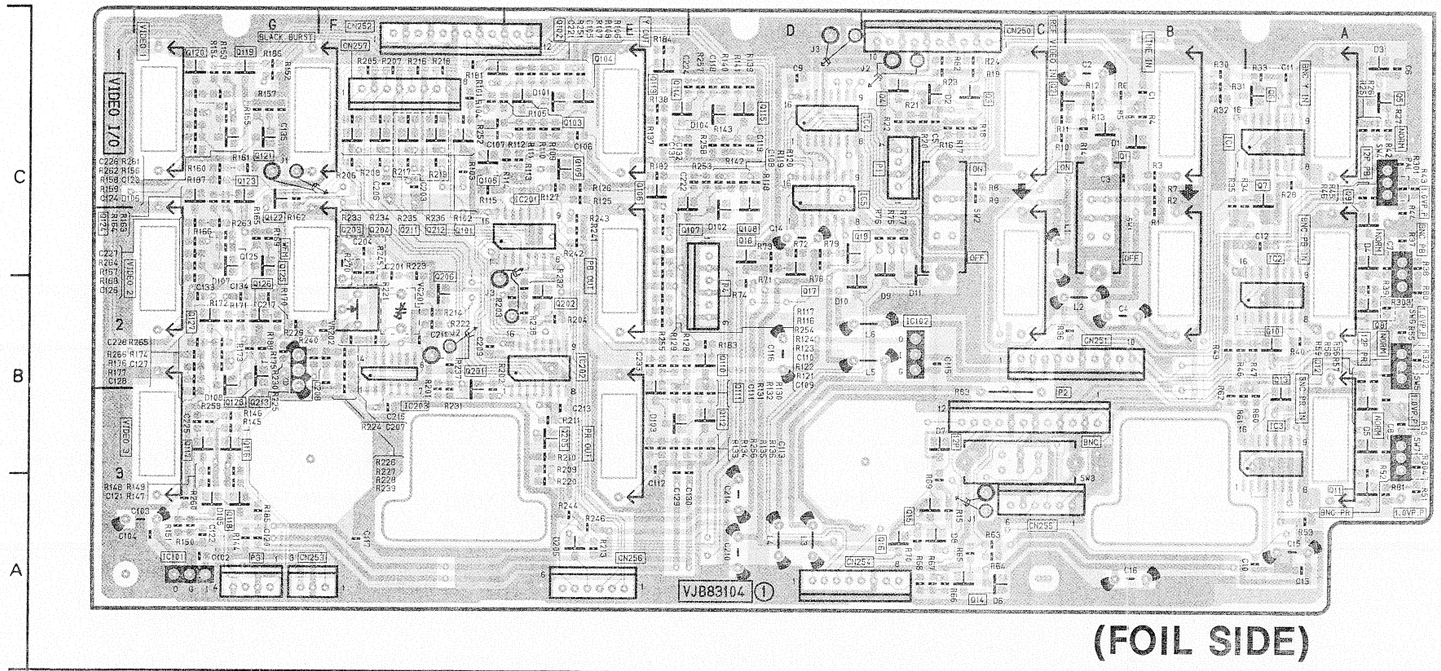

(FOIL SIDE)

VIDEO I/O			
FOIL SIDE		Q125	C-2
TRANSISTOR		Q126	B-2
Q1	C-6	Q127	B-1
Q2	C-6	Q128	B-2
Q3	C-5	Q201	B-3
Q4	C-5	Q202	B-3
Q5	C-7	Q203	C-2
Q6	C-7	Q204	C-2
Q7	C-7	Q205	B-3
Q8	B-7	Q206	B-3
Q9	C-7	Q211	C-2
Q10	B-7	Q212	C-3
Q11	A-7	Q213	B-2
Q12	B-7	INTEGRATED CIRCUIT	
Q13	B-7	IC1	C-7
Q14	A-5	IC2	B-7
Q15	A-5	IC3	B-7
Q16	A-5	IC4	C-5
Q17	C-4	IC5	C-5
Q18	C-4	IC101	A-1
Q19	C-5	IC102	B-5
Q101	C-3	IC201	C-3
Q102	C-3	IC202	B-3
Q103	C-3	IC203	B-2
Q104	C-3	ADJUSTMENT	
Q105	C-3	VR202	B-2
Q106	C-4	CONNECTOR	
Q107	C-4	CN250	C-5
Q108	C-4	CN251	B-6
Q109	C-3	CN252	C-9
Q110	B-4	CN253	A-2
Q111	B-4	CN254	A-5
Q112	B-4	CN255	A-6
Q113	C-4	CN256	A-3
Q114	C-4	CN257	C-2
Q115	C-4	P1	C-5
Q116	B-2	P2	B-6
Q117	B-1	P3	A-2
Q118	A-2		
Q119	C-2		
Q120	C-1		
Q121	C-2		
Q122	C-2		
Q123	C-2		
Q124	C-1		

ADDRESS INFORMATION

VIDEO I/O P.C.BOARD

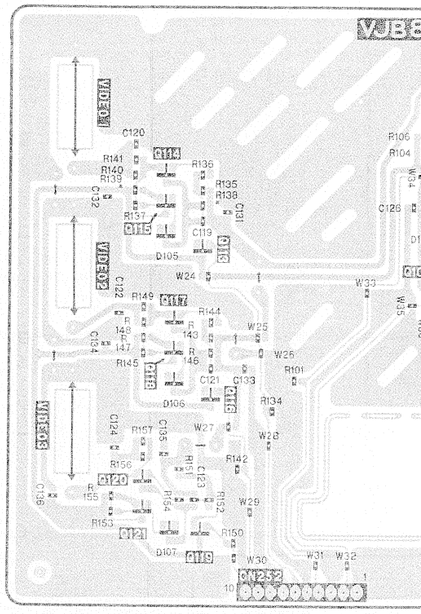

TYPE \ MODEL	AU-665	AU
NTSC	VEP80621 A	Not
PAL	VEP80621 A	Not

VIDEO VR P.C.B

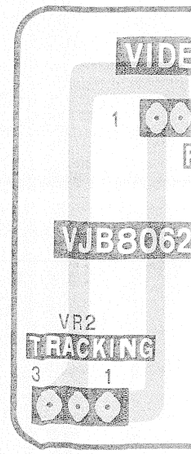

TYPE \ MODEL	AU-665	AU-65	AU-63	AU-62
NTSC	VEP00E27C	VEP00E27C	VEP00E27C	VEP00E27C
PAL	VEP00E27C	VEP00E27C	VEP00E27C	VEP00E27C

TR SENSOR(1) P.C.BOARD

(FOIL SIDE)

TYPE \ MODEL	AU-665	AU-65	AU-63	AU-62
NTSC	VEP00E28C	VEP00E28C	VEP00E28C	VEP00E28C
PAL	VEP00E28C	VEP00E28C	VEP00E28C	VEP00E28C

TR SENSOR(2) P.C.BOARD

(FOIL SIDE)

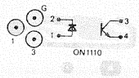

TYPE \ MODEL	AU-665	AU-65	AU-63	AU-62
NTSC	VEP00E25C	VEP00E25C	VEP00E25C	VEP00E25C
PAL	VEP00E25C	VEP00E25C	VEP00E25C	VEP00E25C

UNLOADING PHOTO P.C.BOARD

(FOIL SIDE)

TYPE \ MODEL	AU-665	AU-65	AU-63	AU-62
NTSC	VEP80083B	Not Used	Not Used	Not Used
PAL	VEP80083B	Not Used	Not Used	Not Used

VIDEO CH4 P.C.BOARD

(FOIL SIDE)

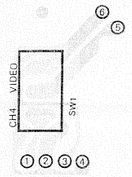

VIDEO I/O P.C.BOARD

TYPE \ MODEL	AU-665	AU-65	AU-63	AU-62
NTSC	VEP83104A	See Next Page		
PAL	VEP83104B			

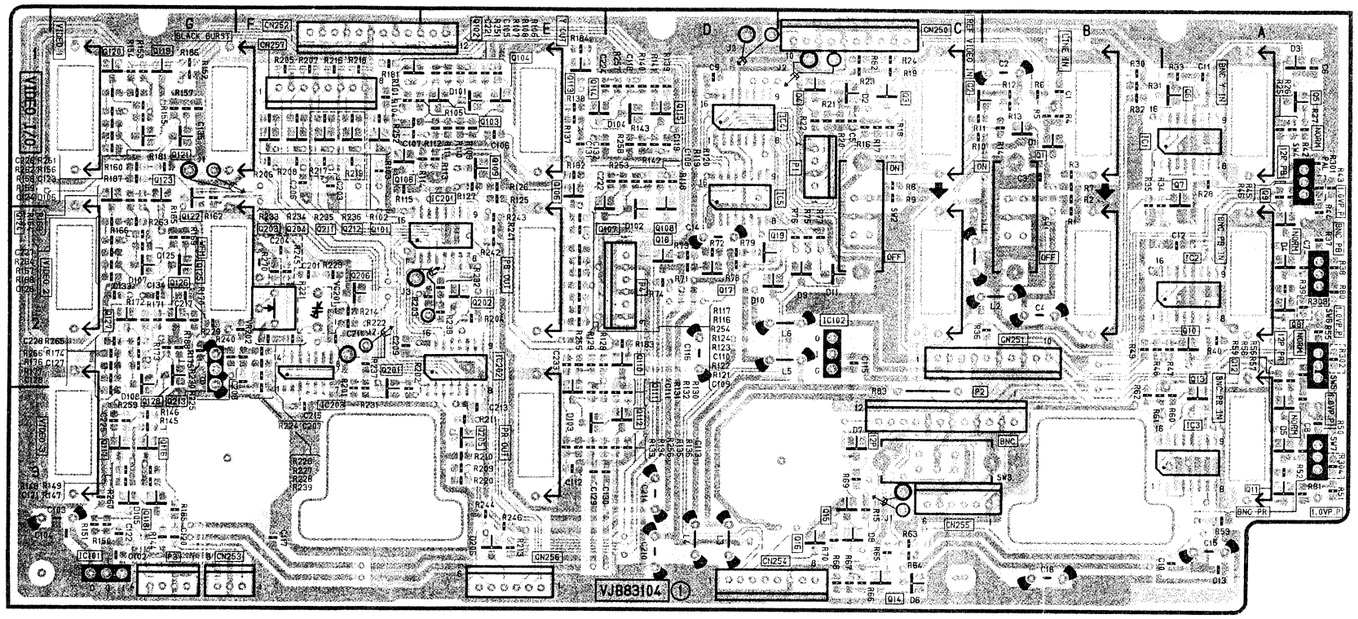

(FOIL SIDE)

VIDEO I/O	
FOIL SIDE	
TRANSISTOR	
Q1	C-6
Q2	C-6
Q3	C-5
Q4	C-5
Q5	C-7
Q6	C-7
Q7	C-7
Q8	B-7
Q9	C-7
Q10	B-7
Q11	A-7
Q12	B-7
Q13	B-7
Q14	A-5
Q15	A-5
Q16	A-5
Q17	C-4
Q18	C-4
Q19	C-5
Q101	C-3
Q102	C-3
Q103	C-3
Q104	C-3
Q105	C-3
Q106	C-4
Q107	C-4
Q108	C-3
Q109	C-3
Q110	B-4
Q111	B-4
Q112	B-4
Q113	C-4
Q114	C-4
Q115	C-4
Q116	B-2
Q117	B-1
Q118	A-2
Q119	C-2
Q120	C-1
Q121	C-2
Q122	C-2
Q123	C-2
Q124	C-1
Q125	C-2
Q126	B-2
Q127	B-1
Q128	B-2
Q201	B-3
Q202	B-3
Q203	C-2
Q204	C-2
Q205	B-3
Q206	B-3
Q211	C-2
Q212	C-3
Q213	B-2
INTEGRATED CIRCUIT	
IC1	C-7
IC2	B-7
IC3	B-7
IC4	C-5
IC5	C-5
IC101	A-1
IC102	B-5
IC201	C-3
IC202	B-3
IC203	B-2
ADJUSTMENT	
VR202	B-2
CONNECTOR	
CN250	C-5
CN251	B-6
CN252	C-5
CN253	A-2
CN254	A-5
CN255	A-6
CN256	A-3
CN257	C-2
P1	C-5
P2	B-6
P3	A-2

ADDRESS INFORMATION

VIDEO I/O P.C.BOARD

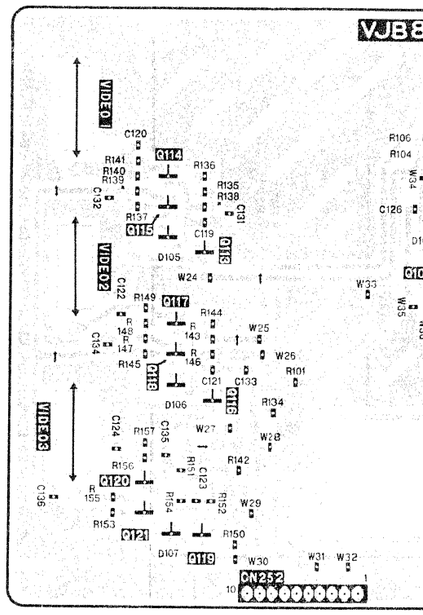

TYPE \ MODEL	AU-665	AU
NTSC	VEP80621 A	Not
PAL	VEP80621 A	Not

VIDEO VR P.C.B

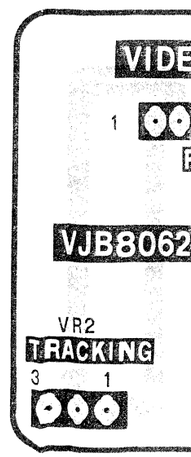

TYPE \ MODEL	AU-665	AU-65	AU-63	AU-62
NTSC	VEP00E27C	VEP00E27C	VEP00E27C	VEP00E27C
PAL	VEP00E27C	VEP00E27C	VEP00E27C	VEP00E27C

TR SENSOR(1) P.C.BOARD

(FOIL SIDE)

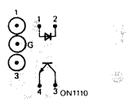

TYPE \ MODEL	AU-665	AU-65	AU-63	AU-62
NTSC	VEP00E28C	VEP00E28C	VEP00E28C	VEP00E28C
PAL	VEP00E28C	VEP00E28C	VEP00E28C	VEP00E28C

TR SENSOR(2) P.C.BOARD

(FOIL SIDE)

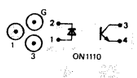

TYPE \ MODEL	AU-665	AU-65	AU-63	AU-62
NTSC	VEP00E25C	VEP00E25C	VEP00E25C	VEP00E25C
PAL	VEP00E25C	VEP00E25C	VEP00E25C	VEP00E25C

UNLOADING PHOTO P.C.BOARD

(FOIL SIDE)

TYPE \ MODEL	AU-665	AU-65	AU-63	AU-62
NTSC	VEP80083B	Not Used	Not Used	Not Used
PAL	VEP80083B	Not Used	Not Used	Not Used

VIDEO CH4 P.C.BOARD

(FOIL SIDE)

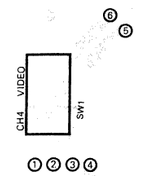

VIDEO I/O P.C.BOARD

TYPE \ MODEL	AU-665	AU-65	AU-63	AU-62
NTSC	See Front Page	VEP83097A	VEP83097B	VEP83097B
PAL		VEP83097C	VEP83097B	VEP83097C

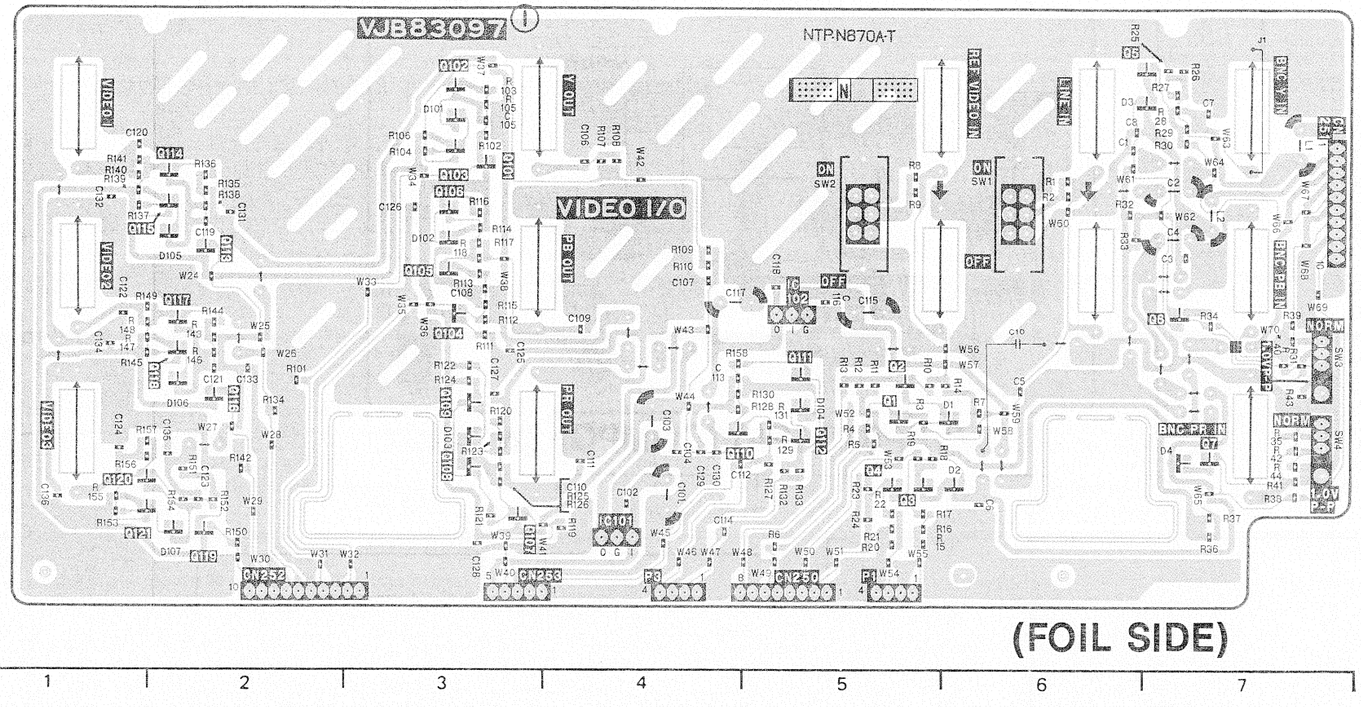

VIDEO I/O			
FOIL SIDE		INTEGRATED CIRCUIT	
TRANSISTOR		IC101	A-4
Q1	B-5	IC102	B-5
Q2	B-5	CONNECTOR	
Q3	A-5	CN250	A-5
Q4	A-5	CN251	C-7
Q5	C-7	CN252	A-2
Q6	B-7	CN253	A-3
Q7	B-7	P1	A-5
Q101	C-3	P3	A-4
Q102	C-3		
Q103	C-3		
Q104	B-3		
Q105	C-3		
Q106	C-3		
Q107	A-3		
Q108	B-3		
Q109	B-3		
Q110	B-4		
Q111	B-5		
Q112	B-5		
Q113	C-2		
Q114	C-2		
Q115	C-2		
Q116	B-2		
Q117	B-2		
Q118	B-2		
Q119	A-2		
Q120	A-1		
Q121	A-1		

ADDRESS INFORMATION

50P REMOTE P.C.B

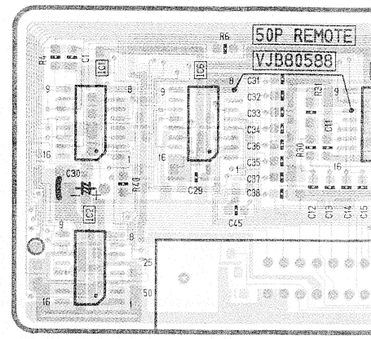

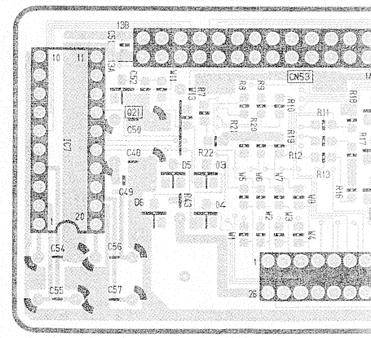

FOIL SIDE		CO
TRANSISTOR		
Q18	D-5	Q1
INTEGRATED CIRCUIT		Q2
IC1	D-1	Q3
IC2	D-1	Q4
IC3	D-4	Q5
IC4	D-3	Q6
IC5	D-3	Q7
IC6	D-2	Q8
IC7	D-5	Q9
CONNECTOR		Q10
CN53	E-4	Q11
CN361	D-3	Q12
		Q13

ADDRESS INFORMATION

This P.C.Board
P.C.Board Diagra
AU-MK25 section

AU-65	AU-63	AU-62
ot Used	Not Used	Not Used
ot Used	Not Used	Not Used

H4 P.C.BOARD

IL SIDE)

TYPE \ MODEL	AU-665	AU-65	AU-63	AU-62
NTSC	VEP80621A	Not Used	Not Used	Not Used
PAL	VEP80621A	Not Used	Not Used	Not Used

VIDEO VR P.C.BOARD

(FOIL SIDE)

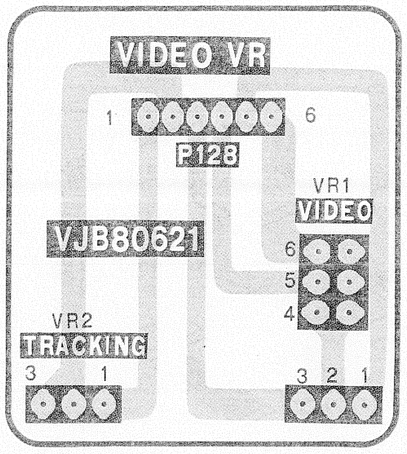

P.C. Board Location

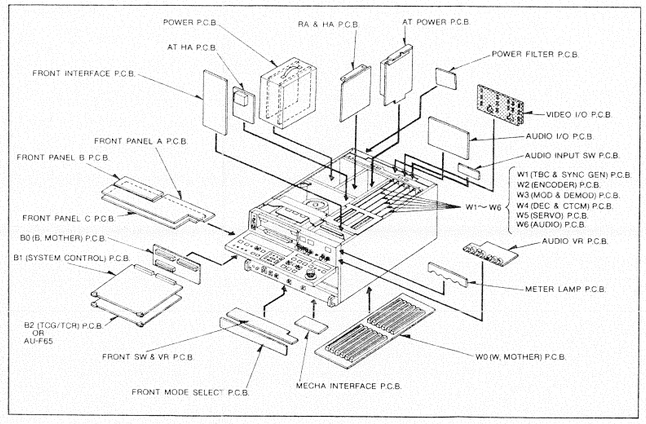

CHIP PART INFORMATION

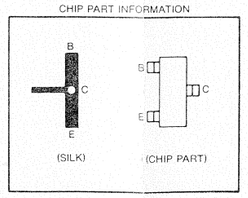

TYPE \ MODEL	AU-665	AU-65	AU-63	AU-62
NTSC	VEP80558A	Refer To AU-MK25 Section		
PAL	VEP80558A			

TYPE \ MODEL	AU-665	AU-65	AU-63	AU-62
NTSC	VEP80551B	VEP80551A	VEP80551A	VEP80551A
PAL	VEP80551B	VEP80551A	VEP80551A	VEP80551A

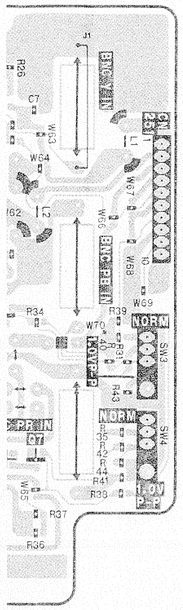

W1(TBC & SYNC GEN) WAVEFORMS FOR NTSC

TEST POINT	TP201	TP202	TP203	TP204
VOLTS/DIV.	200mV	200mV	500mV	2V
SEC/DIV.	20usec	20usec	20usec	20usec
MODE	PLAY	PLAY	PLAY	PLAY
WAVEFORM	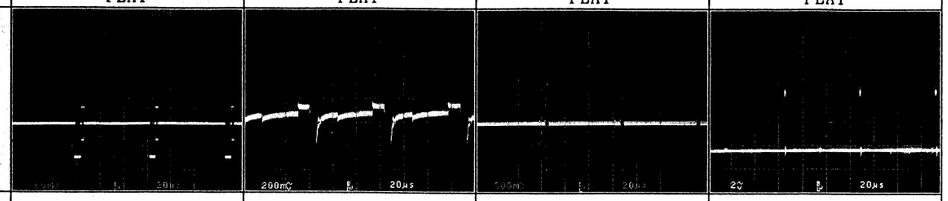			
TEST POINT	TP207	TP208	TP210	TP211
VOLTS/DIV.	2V	2V	2V	2V
SEC/DIV.	100nsec	20usec	20usec	20usec
MODE	PLAY	PLAY	PLAY	PLAY
WAVEFORM	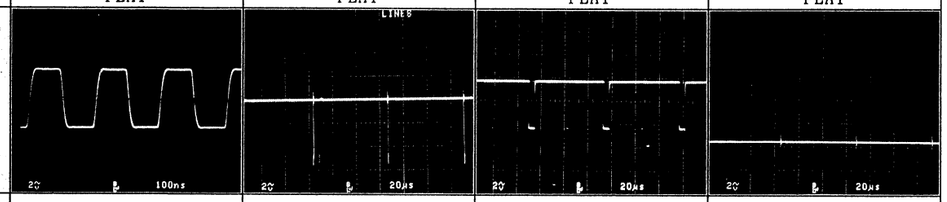			
TEST POINT	TP212	TP213	TP214	TP215
VOLTS/DIV.	2V	2V	2V	2V
SEC/DIV.	20usec	5msec	10msec	10msec
MODE	PLAY	PLAY	PLAY	PLAY
WAVEFORM				
TEST POINT	TP412	TP413	TP416	TP417
VOLTS/DIV.	2V	2V	2V	2V
SEC/DIV.	20usec	20usec	20usec	20usec
MODE	PLAY	PLAY	PLAY	PLAY
WAVEFORM	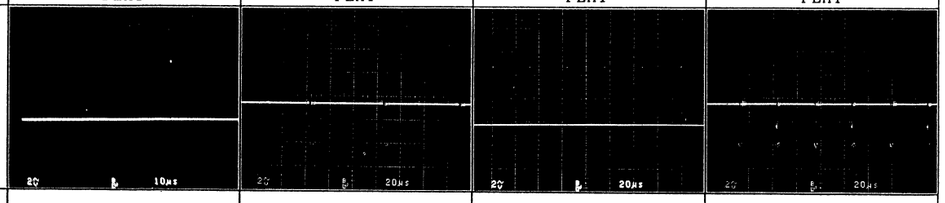			
TEST POINT	TP422	TP423	TP424	TP425
VOLTS/DIV.	2V	2V	2V	2V
SEC/DIV.	20usec	20usec	20usec	50usec
MODE	PLAY	PLAY	PLAY	PLAY
WAVEFORM	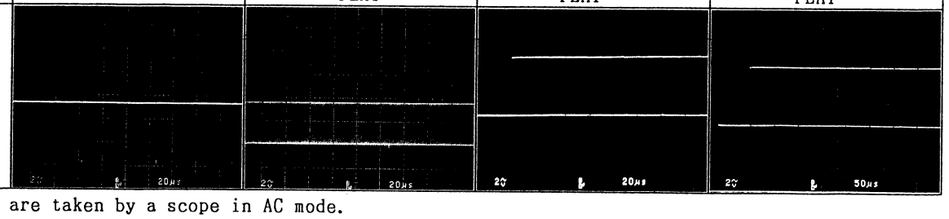			

These waveforms are taken by a scope in AC mode.

W2(ENCODER) WAVEFORMS FOR NTSC

TEST POINT	TP1	TP2	TP3	TP4
VOLTS/DIV.	500mV	500mV	1V	500mV
SEC/DIV.	20usec	10usec	20usec	10usec
MODE	PLAY	PLAY	PLAY	PLAY
WAVEFORM	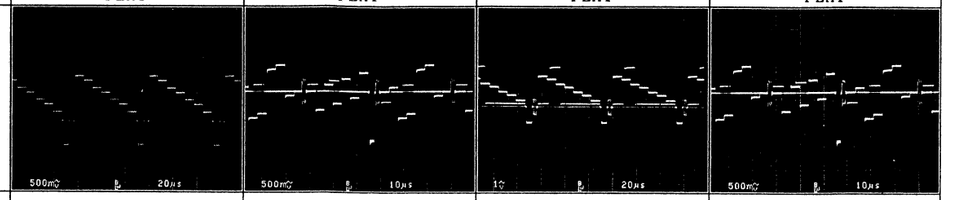			
TEST POINT	TP6	TP7	TP201	TP202
VOLTS/DIV.	200mV	100mV	500mV	1V
SEC/DIV.	20usec	10usec	20usec	20usec
MODE	PLAY	PLAY	PLAY	PLAY
WAVEFORM	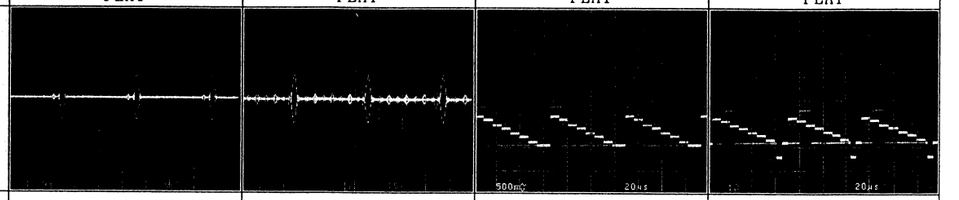			
TEST POINT	TP203	TP204	TP206	TP501
VOLTS/DIV.	500mV	500mV	500mV	500mV
SEC/DIV.	20usec	20usec	20usec	20usec
MODE	PLAY	PLAY	PLAY	PLAY
WAVEFORM				
TEST POINT	TP502	TP503	TP505	TP506
VOLTS/DIV.	200mV	200mV	1V	500mV
SEC/DIV.	20usec	20usec	20usec	20usec
MODE	PLAY	PLAY	PLAY	PLAY
WAVEFORM	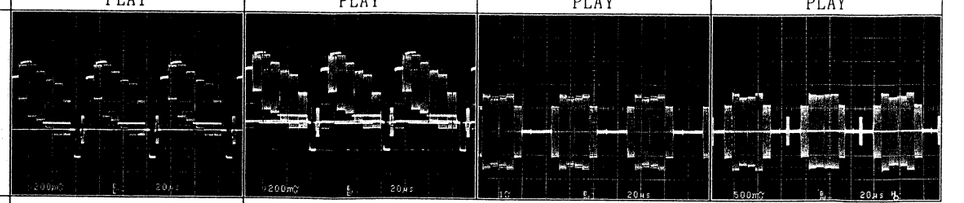			
TEST POINT	TP507			
VOLTS/DIV.	1V			
SEC/DIV.	20usec			
MODE	PLAY			
WAVEFORM	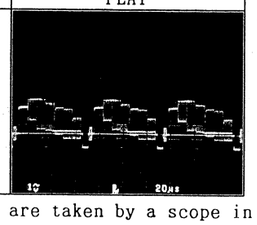			

These waveforms are taken by a scope in AC mode.

W3(MOD & DEMOD) WAVEFORMS FOR NTSC

TP4
500mV
10usec
PLAY

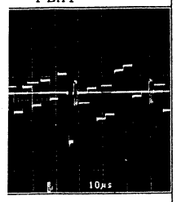

TP202
1V
20usec
PLAY

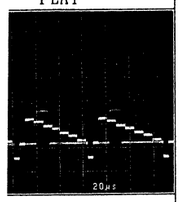

TP501
500mV
20usec
PLAY

TP506
500mV
20usec
PLAY

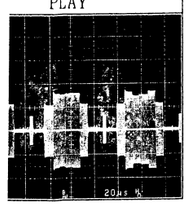

TEST POINT	TP1	TP3	TP5	TP6
VOLTS/DIV.	1V	100mV	200mV	100mV
SEC/DIV.	20usec	20usec	20usec	20usec
MODE	REC	REC	REC	REC
WAVEFORM	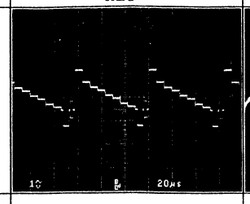	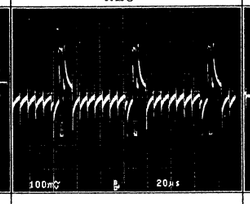	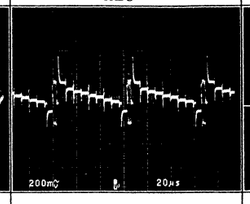	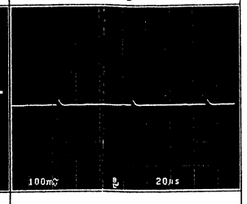

TEST POINT	TP7	TP8	TP201	TP203
VOLTS/DIV.	100mV	50mV	1V	100mV
SEC/DIV.	50usec	20usec	20usec	10usec
MODE	REC	REC	REC	REC
WAVEFORM	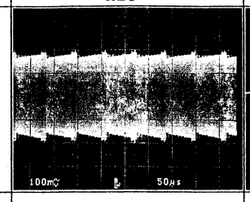	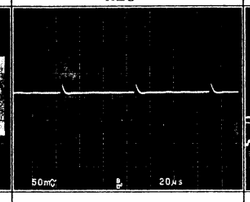	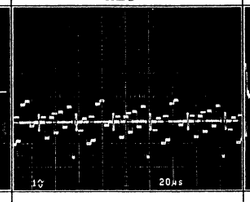	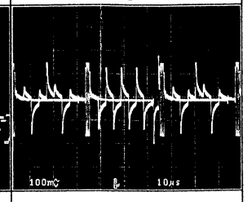

TEST POINT	TP204	TP205	TP207	TP301
VOLTS/DIV.	50mV	200mV	200mV	100mV
SEC/DIV.	20usec	10usec	20usec	20usec
MODE	REC	REC	REC	PLAY
WAVEFORM				

TEST POINT	TP302	TP307	TP309	TP310
VOLTS/DIV.	50mV	100mV	1V	100mV
SEC/DIV.	20usec	5msec	20usec	20usec
MODE	PLAY	PLAY	PLAY	PLAY
WAVEFORM	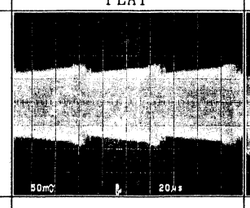	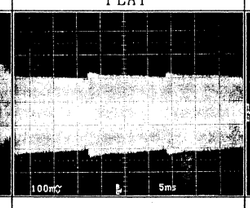	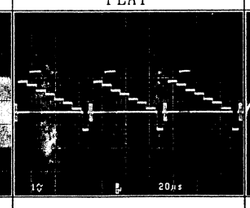	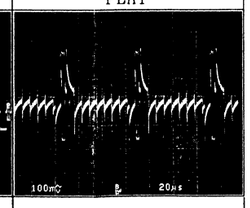

TEST POINT	TP311	TP316	TP701	TP702
VOLTS/DIV.	500mV	100mV	200mV	100mV
SEC/DIV.	20usec	20usec	10usec	20usec
MODE	PLAY	PLAY	PLAY	PLAY
WAVEFORM	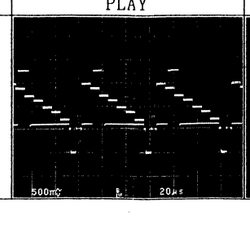	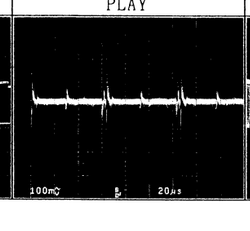	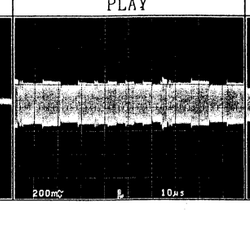	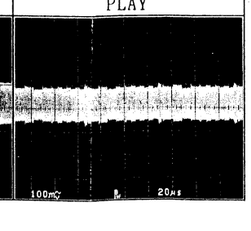

TEST POINT	TP703	TP706	TP707	TP708
VOLTS/DIV.	100mV	1V	100mV	500mV
SEC/DIV.	5usec	10usec	10usec	10usec
MODE	PLAY	PLAY	PLAY	PLAY
WAVEFORM	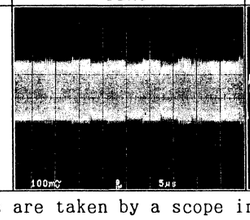	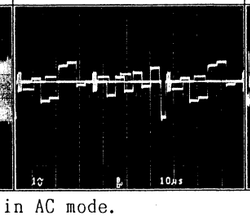	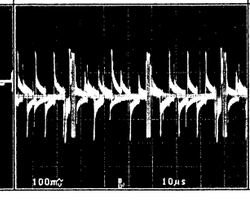	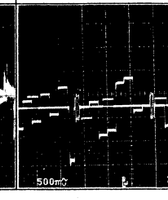

These waveforms are taken by a scope in AC mode.

W4(DECODER & CTCM) WAVEFORMS FOR NTSC

TEST POINT	TP3	TP202	TP203	TP204
VOLTS/DIV.	500mV	500mV	100mV	50mV
SEC/DIV.	20usec	20usec	20usec	20usec
MODE	REC	REC	REC	REC
WAVEFORM	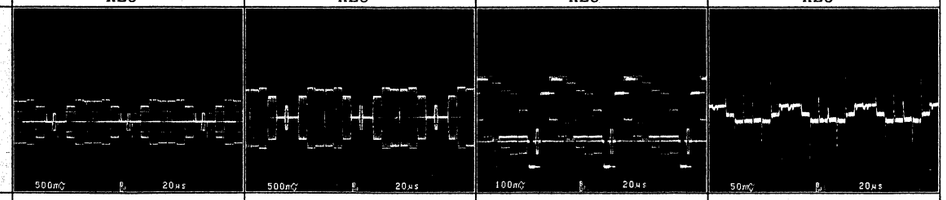			

TEST POINT	TP205	TP206	TP401	TP403
VOLTS/DIV.	500mV	200mV	2V	2V
SEC/DIV.	20usec	20usec	10msec	10msec
MODE	REC	REC	REC	REC
WAVEFORM	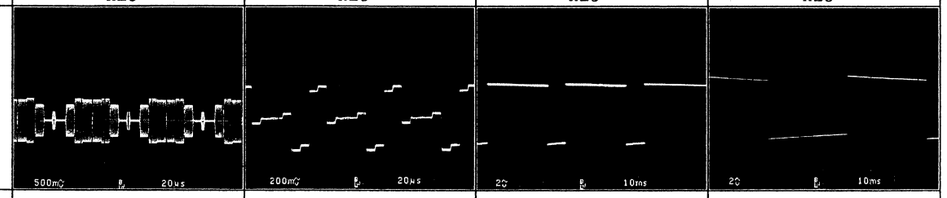			

TEST POINT	TP501	TP502	TP504	TP601
VOLTS/DIV.	200mV	200mV	200mV	200mV
SEC/DIV.	20usec	20usec	20usec	10usec
MODE	REC	REC	REC	REC
WAVEFORM	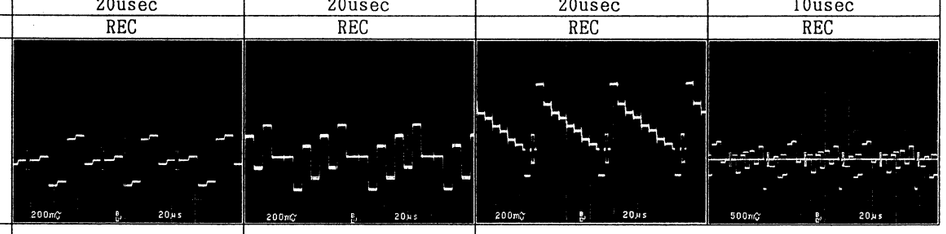			

TEST POINT	TP703	TP704
VOLTS/DIV.	2V	2V
SEC/DIV.	20usec	1usec
MODE	REC	REC
WAVEFORM	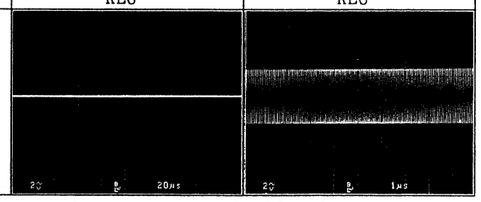	

These waveforms are taken by a scope in AC mode.

W5(SERVO) WAVEFORMS FOR NTSC

TEST POINT	TP3	TP4	TP5	TP6
VOLTS/DIV.	2V	2V	2V	2V
SEC/DIV.	5msec	5msec	5msec	5msec
MODE	PLAY	PLAY	PLAY	PLAY
WAVEFORM	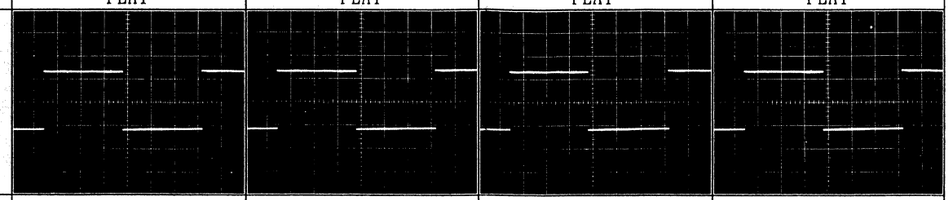			

TEST POINT	TP7	TP13	TP15	TP17
VOLTS/DIV.	2V	2V	2V	2V
SEC/DIV.	5msec	20usec	5msec	5msec
MODE	PLAY	PLAY	PLAY	PLAY
WAVEFORM	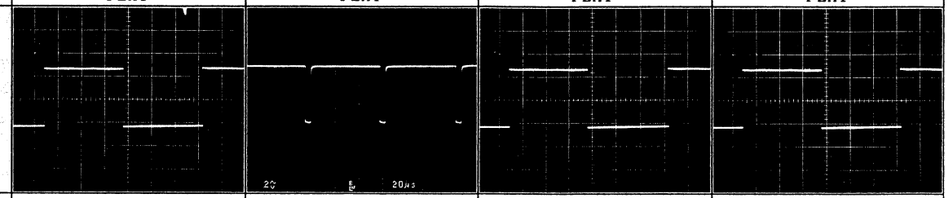			

TEST POINT	TP102	TP104	TP105	TP109
VOLTS/DIV.	2V	2V	2V	1V
SEC/DIV.	10msec	100usec	5msec	5msec
MODE	PLAY	PLAY	PLAY	PLAY
WAVEFORM	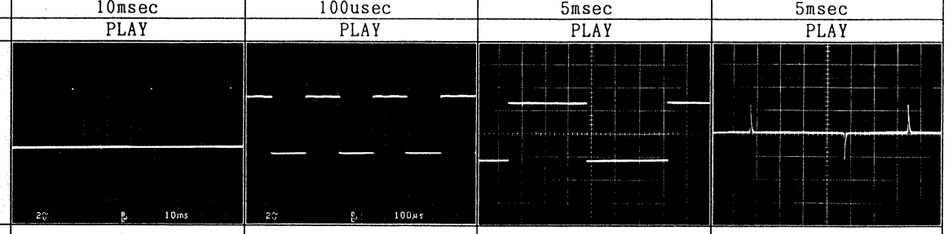			

TEST POINT	TP110	TP113	TP114	TP115
VOLTS/DIV.	2V	5V	2V	2V
SEC/DIV.	5msec	500usec	100usec	100usec
MODE	PLAY	PLAY	PLAY	PLAY
WAVEFORM	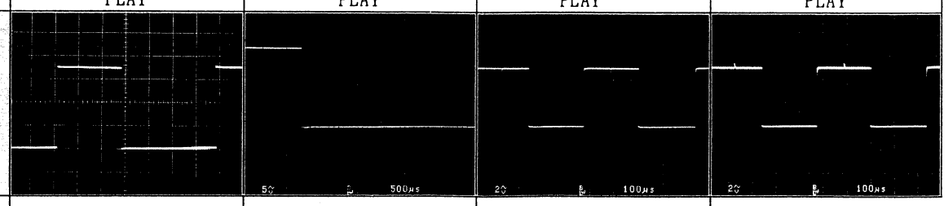			

TEST POINT	TP118	TP201	TP202
VOLTS/DIV.	5V	2V	2V
SEC/DIV.	20msec	2msec	2msec
MODE	PLAY	PLAY	PLAY
WAVEFORM	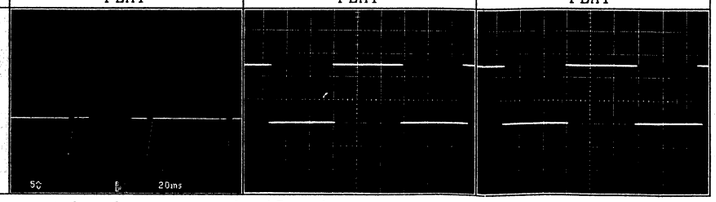		

These waveforms are taken by a scope in AC mode.

W6(AUDIO) WAVEFORMS FOR NTSC

TEST POINT	TP101	TP102	TP201	TP301
VOLTS/DIV.	200mV	200mV	500mV	200mV
SEC/DIV.	200usec	200usec	200usec	200usec
MODE	PLAY	PLAY	REC	PLAY
WAVEFORM	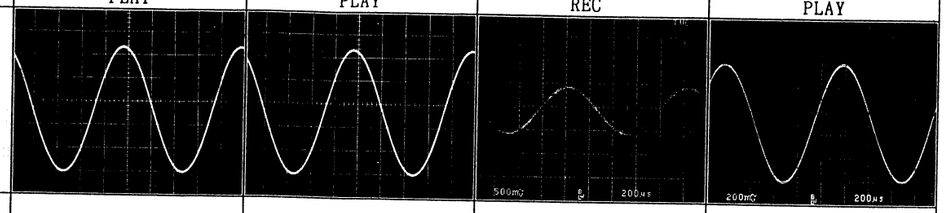			

TEST POINT	TP302	TP401	TP551	TP552
VOLTS/DIV.	200mV	500mV	200mV	200mV
SEC/DIV.	200usec	200usec	5usec	5usec
MODE	PLAY	REC	REC	REC
WAVEFORM	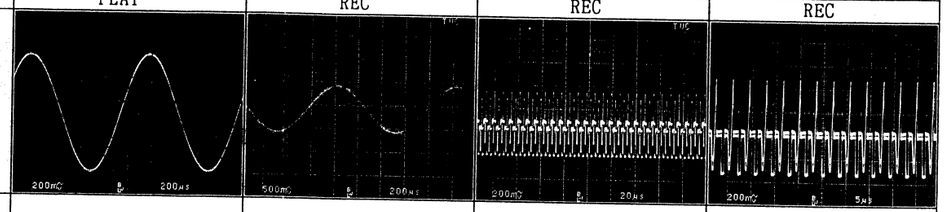			

TEST POINT	TP553	TP554	TP555	TP556
VOLTS/DIV.	200mV	200mV	200mV	200mV
SEC/DIV.	5usec	5usec	5usec	5usec
MODE	REC	REC	REC	REC
WAVEFORM	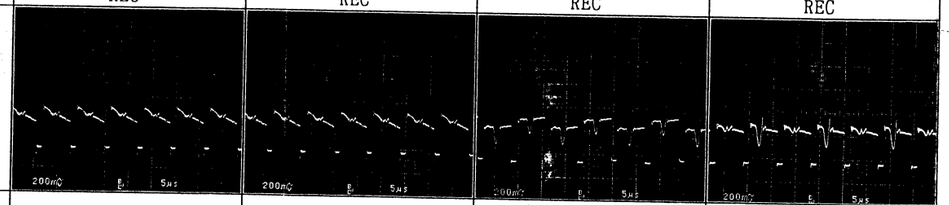			

TEST POINT	TP557	TP558	TP601	TP602
VOLTS/DIV.	200mV	200mV	50mV	200mV
SEC/DIV.	5usec	5usec	20usec	20usec
MODE	REC	REC	REC	REC
WAVEFORM	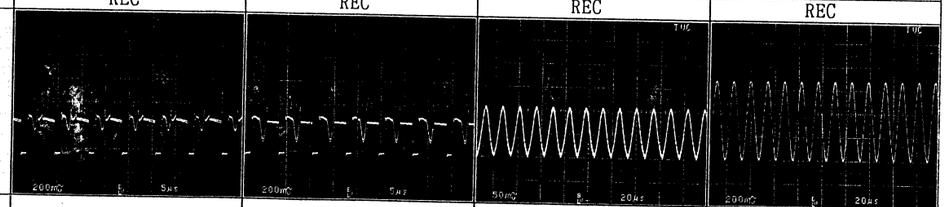			

TEST POINT	TP603	1P604	TP605	TP606
VOLTS/DIV.	50mV	200mV	50mV	200mV
SEC/DIV.	20usec	20usec	20usec	20usec
MODE	REC	REC	REC	REC
WAVEFORM	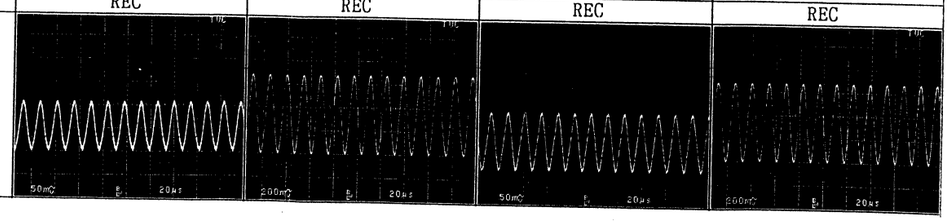			

TEST POINT	TP607	TP608	TP609	TP702
VOLTS/DIV.	50mV	200mV	200mV	200mV
SEC/DIV.	20usec	20usec	20usec	500usec
MODE	REC	REC	REC	PLAY
WAVEFORM	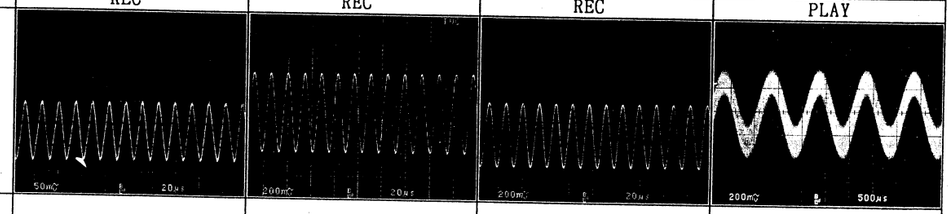			

TEST POINT	TP703	TP704	TP802	TP803
VOLTS/DIV.	20mV	200mV	200mV	20mV
SEC/DIV.	5msec	20usec	500usec	5usec
MODE	PLAY	REC	PLAY	PLAY
WAVEFORM	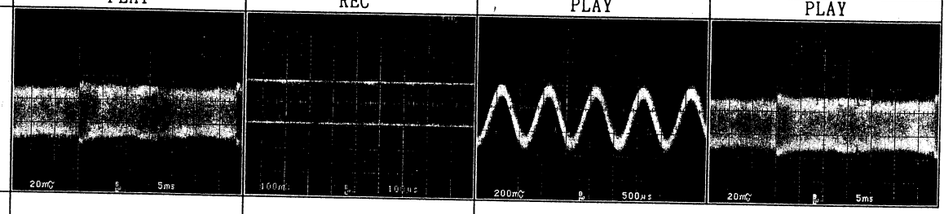			

TEST POINT	TP804	TP901
VOLTS/DIV.	200mV	2V
SEC/DIV.	20usec	5msec
MODE	REC	PLAY
WAVEFORM	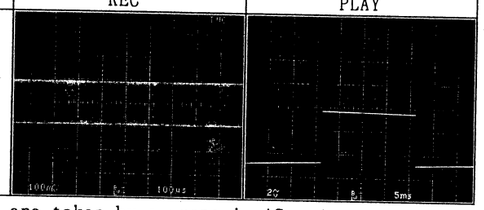	

These waveforms are taken by a scope in AC mode.

B2(TC & BB) WAVEFORMS FOR NTSC

TEST POINT	TP1	TP2	TP3	TP4
VOLTS/DIV.	1V	1V	500mV	1V
SEC/DIV.	5usec	5usec	2msec	200usec
MODE	PLAY	PLAY	PLAY	PLAY
WAVEFORM	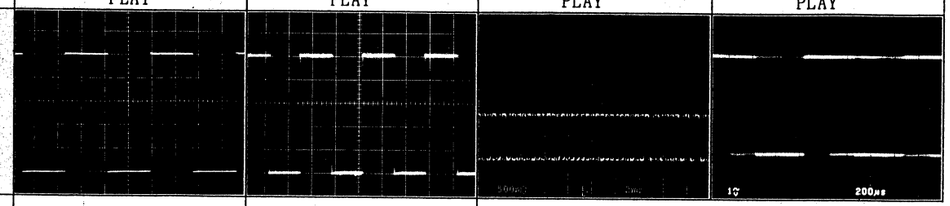			

TEST POINT	TP5	TP6
VOLTS/DIV.	2V	1V
SEC/DIV.	20usec	500usec
MODE	PLAY	PLAY
WAVEFORM	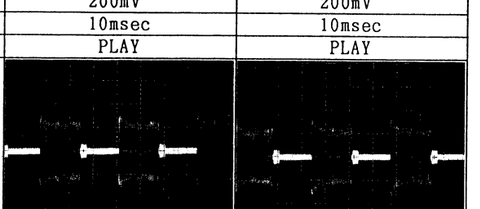	

These waveforms are taken by a scope in AC mode.

AT POWER WAVEFORMS FOR NTSC

TEST POINT	TP1	TP2	TP3	TP4
VOLTS/DIV.	500mV	500mV	200mV	200mV
SEC/DIV.	10msec	10usec	10msec	10nsec
MODE	PLAY	PLAY	PLAY	PLAY
WAVEFORM	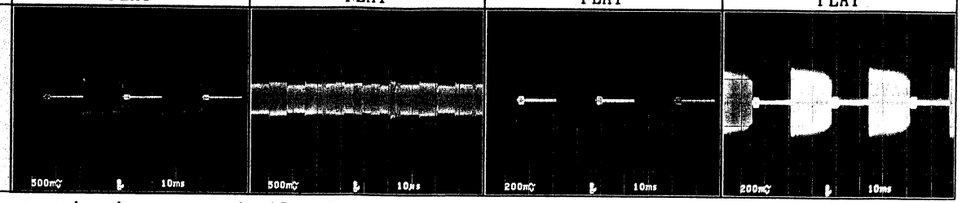			

These waveforms are taken by a scope in AC mode.

RA & HA WAVEFORMS FOR NTSC

TEST POINT	TP7	TP8	TP201	TP202
VOLTS/DIV.	200mV	200mV	200mV	200mV
SEC/DIV.	10msec	10msec	10msec	10msec
MODE	VIDEO INSERT	VIDEO INSERT	PLAY	PLAY
WAVEFORM	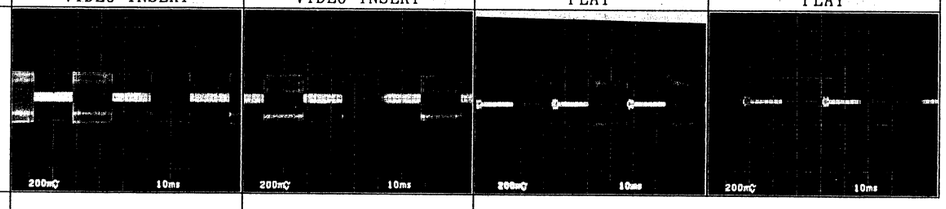			

TEST POINT	TP203	TP204
VOLTS/DIV.	200mV	200mV
SEC/DIV.	10msec	10msec
MODE	PLAY	PLAY
WAVEFORM		

These waveforms are taken by a scope in AC mode.

W1(TBC & SYNC GEN) WAVEFORMS FOR PAL

TP4
200mV
10nsec
PLAY
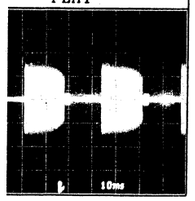

TEST POINT	TP201	TP202	TP203	TP204
VOLTS/DIV.	200mV	V	500mV	100mV
SEC/DIV.	20usec	usec	20usec	20usec
MODE	PLAY	PLAY	PLAY	PLAY
WAVEFORM	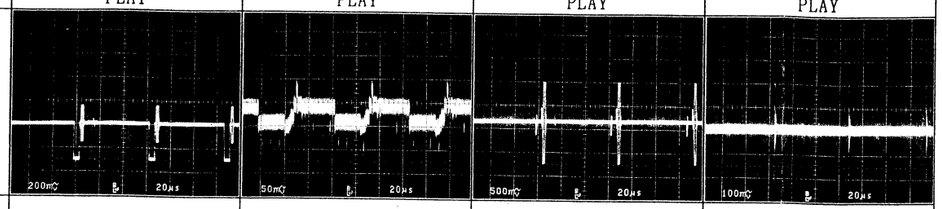			

TEST POINT	TP207	TP208	TP210	TP211
VOLTS/DIV.	2V	500mV	2V	2V
SEC/DIV.	100usec	100usec	20usec	20usec
MODE	PLAY	PLAY	PLAY	PLAY
WAVEFORM	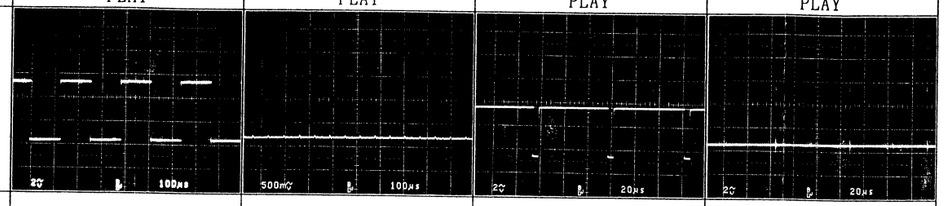			

TEST POINT	TP212	TP213	TP214	TP215
VOLTS/DIV.	2V	2V	2V	2V
SEC/DIV.	20usec	10msec	20msec	20msec
MODE	PLAY	PLAY	PLAY	PLAY
WAVEFORM				

TEST POINT	TP412	TP413	TP416	TP417
VOLTS/DIV.	2V	2V	2V	2V
SEC/DIV.	20usec	20usec	20usec	20usec
MODE	PLAY	PLAY	PLAY	PLAY
WAVEFORM	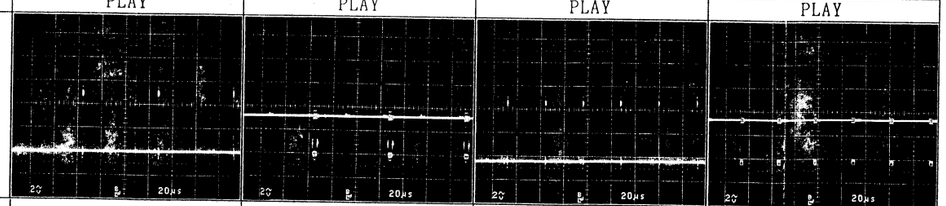			

TEST POINT	TP422	TP423	TP424	TP425
VOLTS/DIV.	2V	2V	2V	2V
SEC/DIV.	20usec	20usec	20usec	50usec
MODE	PLAY	PLAY	PLAY	PLAY
WAVEFORM	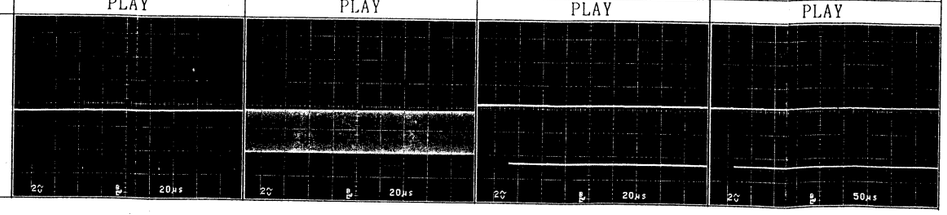			

TEST POINT	TP426	TP427
VOLTS/DIV.	2V	2V
SEC/DIV.	20usec	50usec
MODE	PLAY	PLAY
WAVEFORM	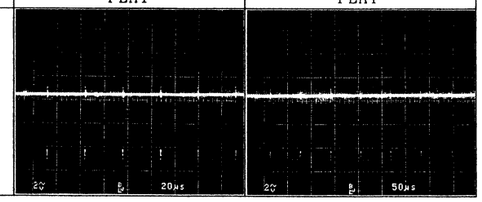	

These waveforms are taken by a scope in AC mode.

W2(ENCODER) WAVEFORMS FOR PAL

TEST POINT	TP1	TP2	TP3	TP4
VOLTS/DIV.	500mV	500mV	1V	1V
SEC/DIV.	20usec	10usec	20usec	10usec
MODE	PLAY	PLAY	PLAY	PLAY
WAVEFORM	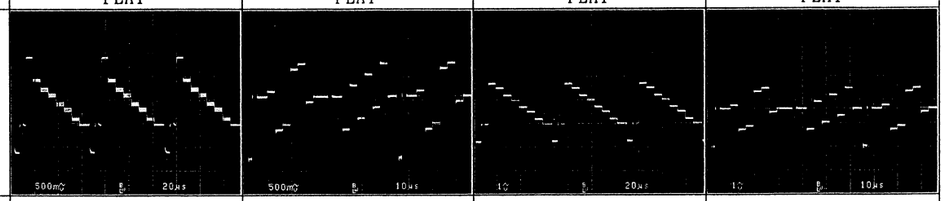			
TEST POINT	TP6	TP7	TP201	TP202
VOLTS/DIV.	200mV	100mV	500mV	500mV
SEC/DIV.	20usec	20usec	20usec	20usec
MODE	PLAY	PLAY	PLAY	PLAY
WAVEFORM	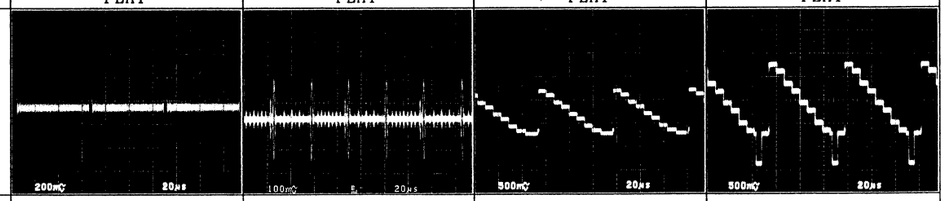			
TEST POINT	TP203	TP204	TP206	TP501
VOLTS/DIV.	500mV	500mV	500mV	500mV
SEC/DIV.	20usec	20usec	20usec	20usec
MODE	PLAY	PLAY	PLAY	PLAY
WAVEFORM	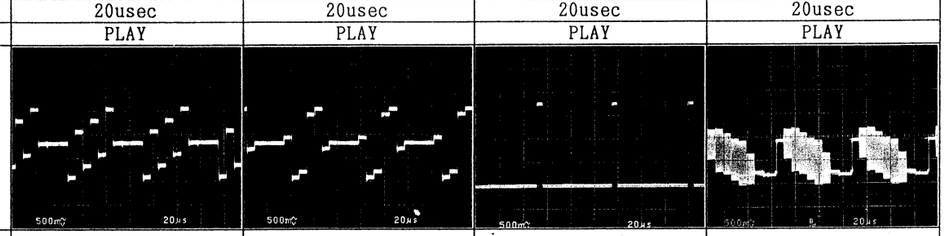			
TEST POINT	TP502	TP503	TP505	TP506
VOLTS/DIV.	1V	1V	1V	500mV
SEC/DIV.	20usec	20usec	20usec	20usec
MODE	PLAY	PLAY	PLAY	PLAY
WAVEFORM	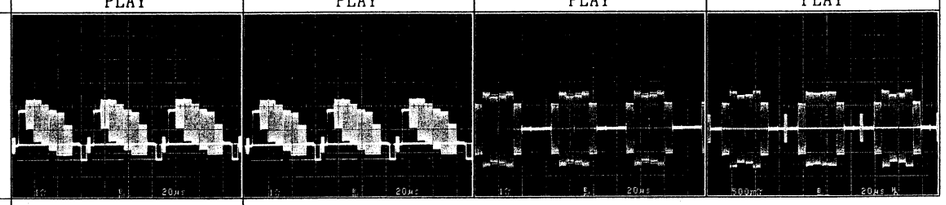			
TEST POINT	TP507			
VOLTS/DIV.	1V			
SEC/DIV.	20usec			
MODE	PLAY			
WAVEFORM	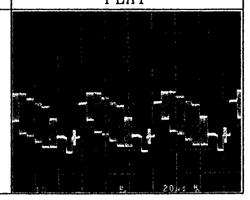			

These waveforms are taken by a scope in AC mode.

W3(MOD & DEMOD) WAVEFORMS FOR PAL

TEST POINT	TP1	TP3	TP4	TP5
VOLTS/DIV.	500mV	100mV	500mV	200mV
SEC/DIV.	20usec	20usec	20usec	20usec
MODE	REC	REC	REC	REC
WAVEFORM	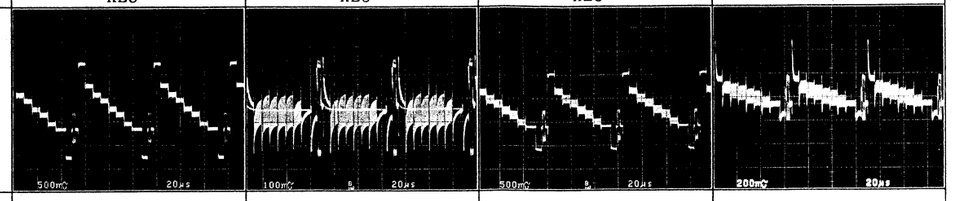			
TEST POINT	TP6	TP7	TP8	TP201
VOLTS/DIV.	200mV	200mV	200mV	500mV
SEC/DIV.	20usec	50usec	20usec	20usec
MODE	REC	REC	REC	REC
WAVEFORM	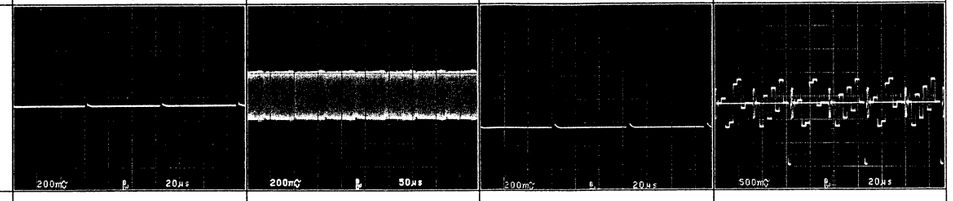			
TEST POINT	TP202	TP203	TP204	TP205
VOLTS/DIV.	500mV	200mV	200mV	200mV
SEC/DIV.	20usec	10usec	20usec	20usec
MODE	REC	REC	REC	REC
WAVEFORM	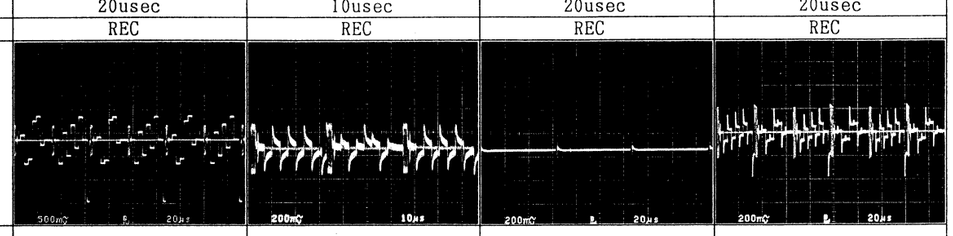			
TEST POINT	TP207	TP301	TP302	TP307
VOLTS/DIV.	100mV	200mV	100mV	100mV
SEC/DIV.	20usec	10usec	20usec	20usec
MODE	REC	PLAY	PLAY	PLAY
WAVEFORM	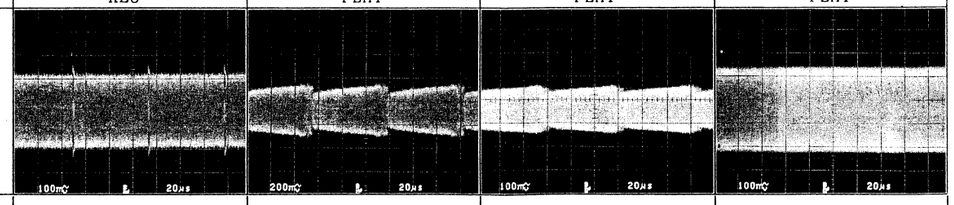			
TEST POINT	TP308	TP309	TP310	TP311
VOLTS/DIV.	50mV	1V	100mV	1V
SEC/DIV.	20usec	20usec	20usec	20usec
MODE	PLAY	PLAY	PLAY	PLAY
WAVEFORM	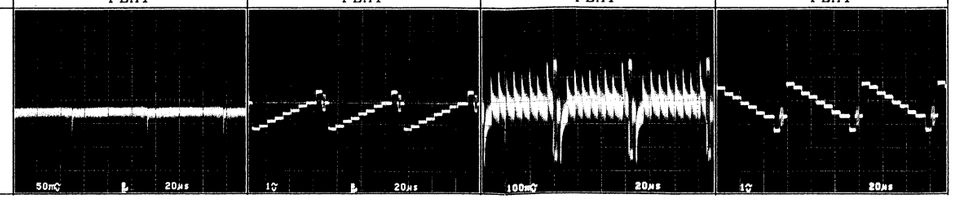			

TEST POINT
VOLTS/DIV.
SEC/DIV.
MODE
WAVEFORM
TEST POINT
VOLTS/DIV.
SEC/DIV.
MODE
WAVEFORM
TEST POINT
VOLTS/DIV.
SEC/DIV.
MODE
WAVEFORM

These wavefor

W4(DECODER & CTCM) WAVEFORMS FOR PAL

TEST POINT	TP312	TP313	TP316	TP317
VOLTS/DIV.	500mV	500mV	100mV	200mV
SEC/DIV.	20usec	20usec	20usec	10msec
MODE	PLAY	PLAY	PLAY	PLAY
WAVEFORM	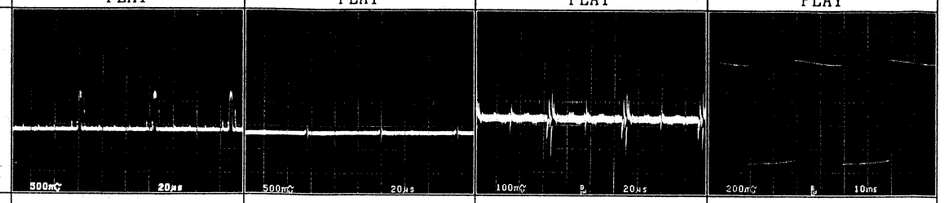			

TEST POINT	TP701	TP702	TP703	TP706
VOLTS/DIV.	200mV	50mV	200mV	500mV
SEC/DIV.	20usec	20usec	20usec	10usec
MODE	PLAY	PLAY	PLAY	PLAY
WAVEFORM	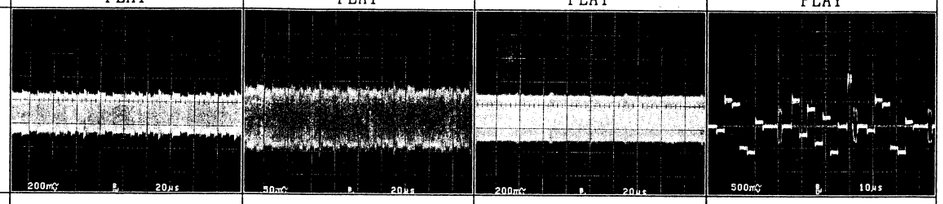			

TEST POINT	TP707	TP708	TP709	TP710
VOLTS/DIV.	100mV	1V	500mV	100mV
SEC/DIV.	10usec	20usec	20usec	20usec
MODE	PLAY	PLAY	PLAY	PLAY
WAVEFORM				

TEST POINT	TP711
VOLTS/DIV.	50mV
SEC/DIV.	20usec
MODE	PLAY
WAVEFORM	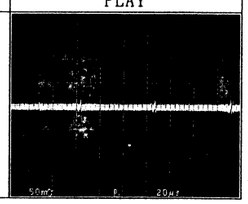

These waveforms are taken by a scope in AC mode.

TEST POINT	TP3	TP202	TP203	TP204
VOLTS/DIV.	500mV	500mV	100mV	50mV
SEC/DIV.	20usec	20usec	20usec	20usec
MODE	REC	REC	REC	REC
WAVEFORM	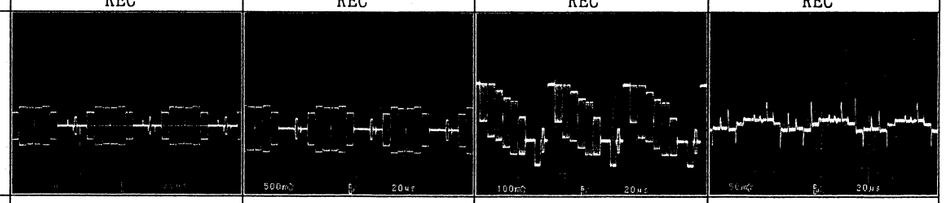			

TEST POINT	TP205	TP206	TP401	TP402
VOLTS/DIV.	200mV	200mV	2V	2V
SEC/DIV.	20usec	20usec	10msec	10msec
MODE	REC	REC	REC	REC
WAVEFORM	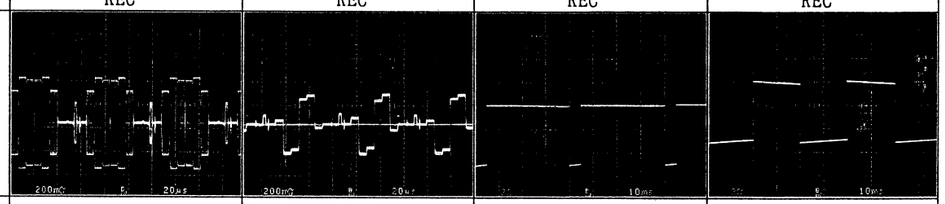			

TEST POINT	TP403	TP501	TP502	TP504
VOLTS/DIV.	2V	100mV	200mV	200mV
SEC/DIV.	20msec	20usec	20usec	20usec
MODE	REC	REC	REC	REC
WAVEFORM				

TEST POINT	TP601	TP703	TP704
VOLTS/DIV.	200mV	2V	2V
SEC/DIV.	20usec	20usec	1usec
MODE	REC	REC	REC
WAVEFORM	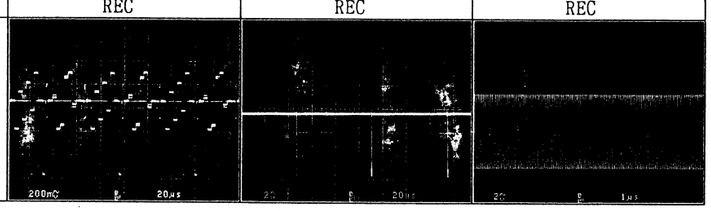		

These waveforms are taken by a scope in AC mode.

W5(SERVO) WAVEFORMS FOR PAL

TEST POINT	TP3	TP4	TP5	TP6
VOLTS/DIV.	5V	5V	5V	5V
SEC/DIV.	10msec	10msec	10msec	10msec
MODE	PLAY	PLAY	PLAY	PLAY
WAVEFORM	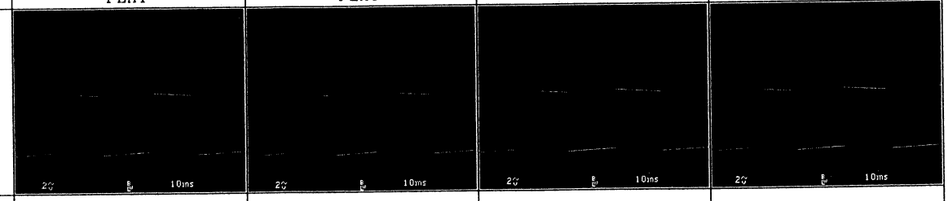			

TEST POINT	TP7	TP13	TP15	TP17
VOLTS/DIV.	2V	2V	2V	2V
SEC/DIV.	10msec	20usec	10msec	10msec
MODE	PLAY	PLAY	PLAY	PLAY
WAVEFORM	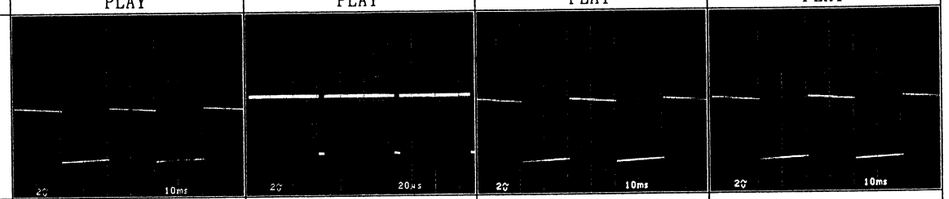			

TEST POINT	TP102	TP103	TP104	TP105
VOLTS/DIV.	2V	2V	2V	2V
SEC/DIV.	20msec	500nsec	100usec	10msec
MODE	PLAY	PLAY	PLAY	PLAY
WAVEFORM	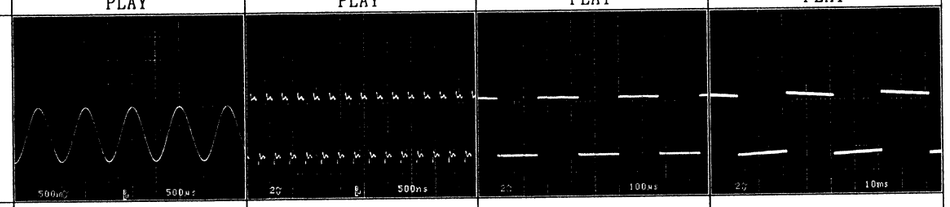			

TEST POINT	TP109	TP110	TP111	TP114
VOLTS/DIV.	1V	2V	2V	2V
SEC/DIV.	5msec	10msec	50usec	200usec
MODE	PLAY	PLAY	PLAY	PLAY
WAVEFORM	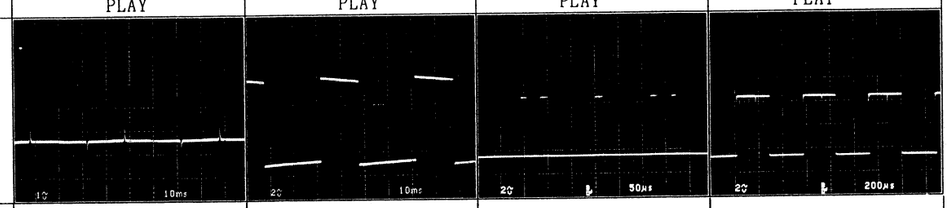			

TEST POINT	TP115	TP118	TP201	TP202
VOLTS/DIV.	2V	2V	2V	2V
SEC/DIV.	200usec	20msec	2msec	2msec
MODE	PLAY	PLAY	PLAY	PLAY
WAVEFORM	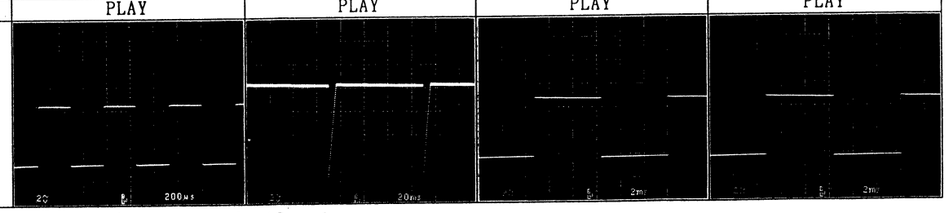			

These waveforms are taken by a scope in AC mode.

W6(AUDIO) WAVEFORMS FOR PAL

TEST POINT	TP1	TP101	TP102	TP201
VOLTS/DIV.	100mV	500mV	500mV	200mV
SEC/DIV.	10msec	500usec	500usec	500usec
MODE	PLAY	PLAY	PLAY	REC
WAVEFORM	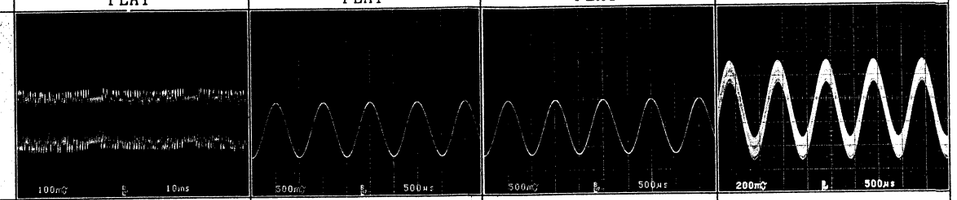			

TEST POINT	TP301	TP302	TP401	TP551
VOLTS/DIV.	500mV	500mV	200mV	200mV
SEC/DIV.	500usec	500usec	500usec	5usec
MODE	PLAY	PLAY REC	REC	REC
WAVEFORM	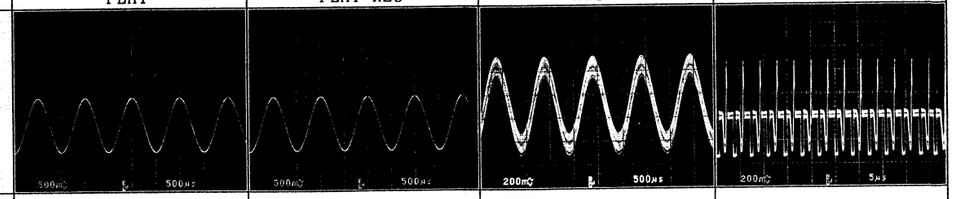			

TEST POINT	TP552	TP553	TP554	TP555
VOLTS/DIV.	200mV	200mV	200mV	200mV
SEC/DIV.	5usec	5usec	5usec	5usec
MODE	REC	REC	REC	REC
WAVEFORM	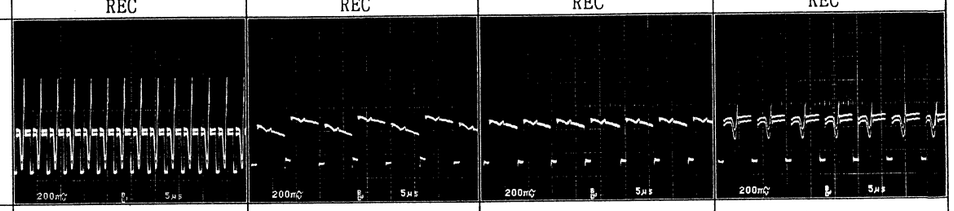			

TEST POINT	TP556	TP557	TP558	TP601
VOLTS/DIV.	200mV	200mV	200mV	50mV
SEC/DIV.	5usec	5usec	5usec	20usec
MODE	REC	REC	REC	REC
WAVEFORM	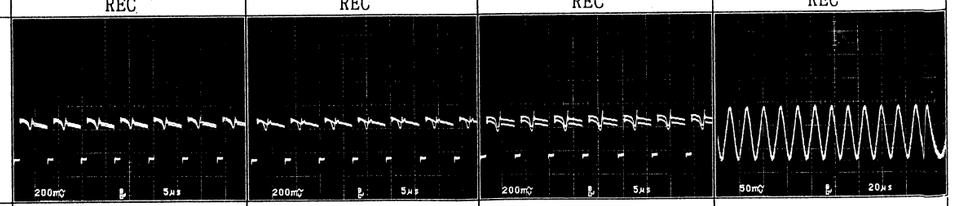			

TEST POINT	TP602	TP603	TP604	TP605
VOLTS/DIV.	200mV	50mV	200mV	50mV
SEC/DIV.	20usec	20usec	20usec	20usec
MODE	REC	REC	REC	REC
WAVEFORM	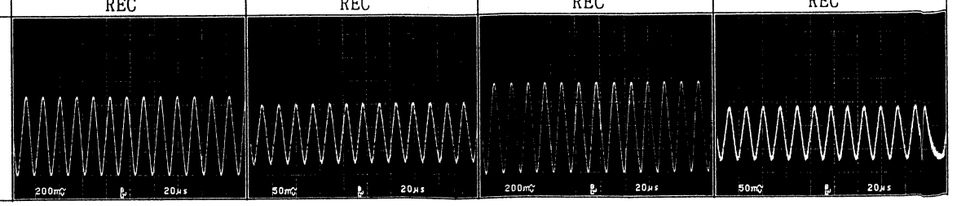			

W6(AUDIO) WAVEFORMS FOR PAL

TP6
5V
10msec
PLAY
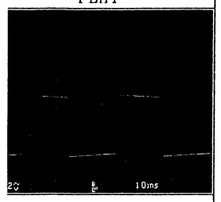

TP17
2V
10msec
PLAY
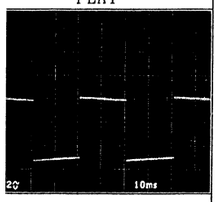

TP105
2V
10msec
PLAY
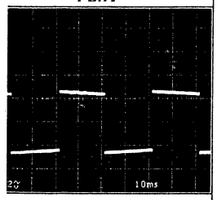

TP114
2V
200usec
PLAY
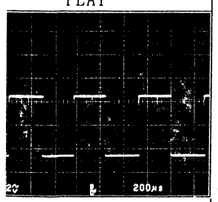

TP202
2V
2msec
PLAY
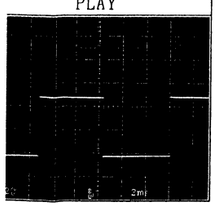

TEST POINT	TP1	TP101	TP102	TP201
VOLTS/DIV.	100mV	500mV	500mV	200mV
SEC/DIV.	10msec	500usec	500usec	500usec
MODE	PLAY	PLAY	PLAY	REC
WAVEFORM	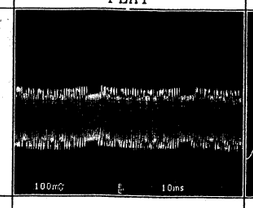	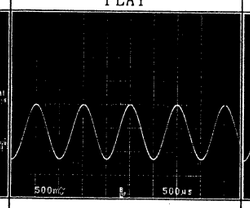	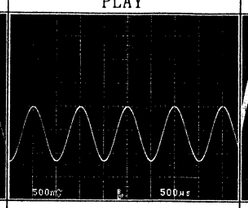	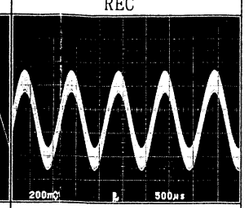

TEST POINT	TP301	TP302	TP401	TP551
VOLTS/DIV.	500mV	500mV	200mV	200mV
SEC/DIV.	500usec	500usec	500usec	5usec
MODE	PLAY	PLAY REC	REC	REC
WAVEFORM	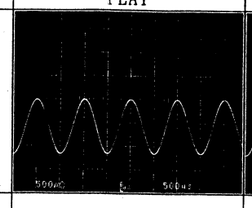	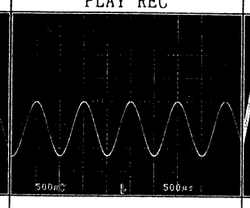	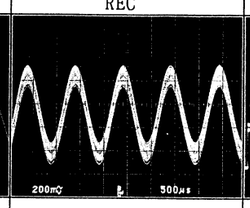	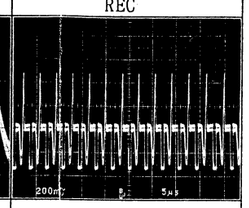

TEST POINT	TP552	TP553	TP554	TP555
VOLTS/DIV.	200mV	200mV	200mV	200mV
SEC/DIV.	5usec	5usec	5usec	5usec
MODE	REC	REC	REC	REC
WAVEFORM	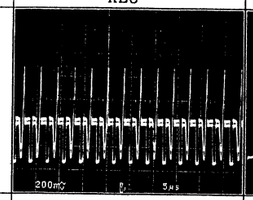	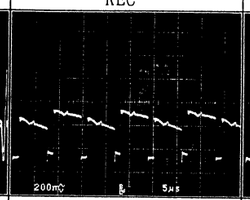	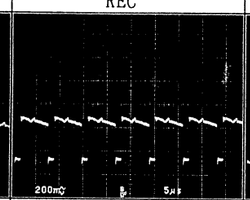	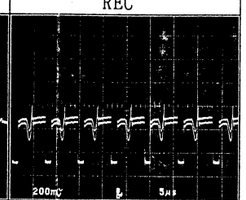

TEST POINT	TP556	TP557	TP558	TP601
VOLTS/DIV.	200mV	200mV	200mV	50mV
SEC/DIV.	5usec	5usec	5usec	20usec
MODE	REC	REC	REC	REC
WAVEFORM	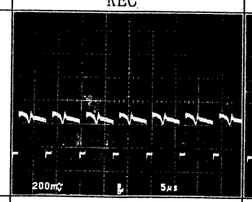	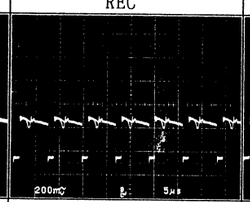	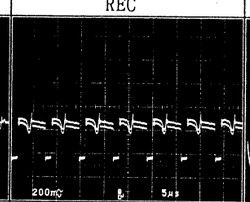	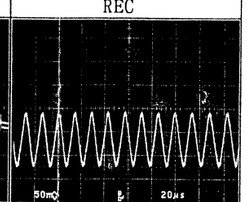

TEST POINT	TP602	TP603	TP604	TP605
VOLTS/DIV.	200mV	50mV	200mV	50mV
SEC/DIV.	20usec	20usec	20usec	20usec
MODE	REC	REC	REC	REC
WAVEFORM	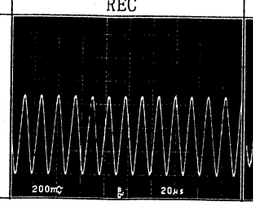	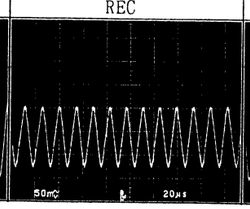	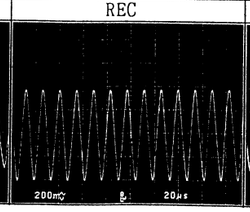	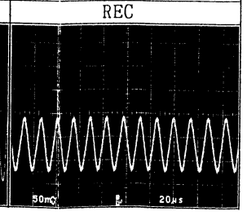

TEST POINT	TP606	TP607	TP608	TP6
VOLTS/DIV.	200mV	50mV	200mV	200
SEC/DIV.	20usec	20usec	20usec	20u
MODE	REC	REC	REC	RE
WAVEFORM	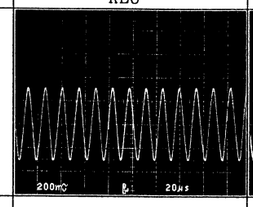	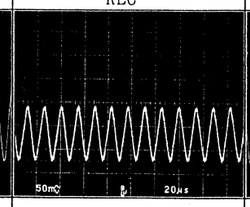	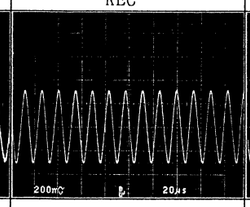	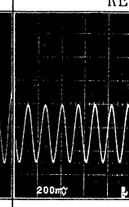

TEST POINT	TP702	TP703	TP704	TP8
VOLTS/DIV.	200mV	50mV	200mV	200
SEC/DIV.	500usec	10msec	20usec	500u
MODE	REC	PLAY	REC	RE
WAVEFORM	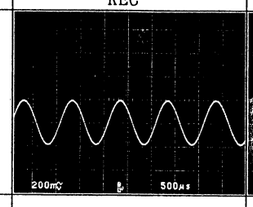	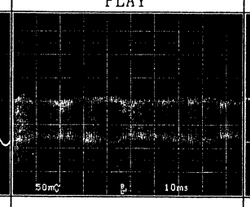	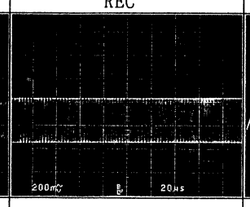	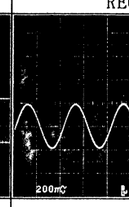

TEST POINT	TP803	TP804	TP901
VOLTS/DIV.	50mV	200mV	2V
SEC/DIV.	10msec	20usec	5msec
MODE	PLAY	REC	PLAY
WAVEFORM	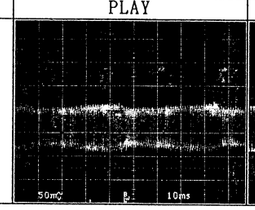	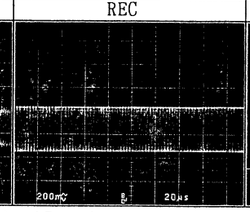	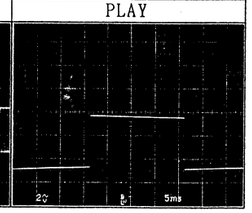

These waveforms are taken by a scope in AC mode.

B2(TC & BB) WAVEFORMS FOR PAL

TEST POINT	TP1	TP2	TP3	TP4
VOLTS/DIV.	2V	2V	500mV	2mV
SEC/DIV.	5usec	5usec	200usec	200usec
MODE	PLAY	PLAY	PLAY	PLAY
WAVEFORM	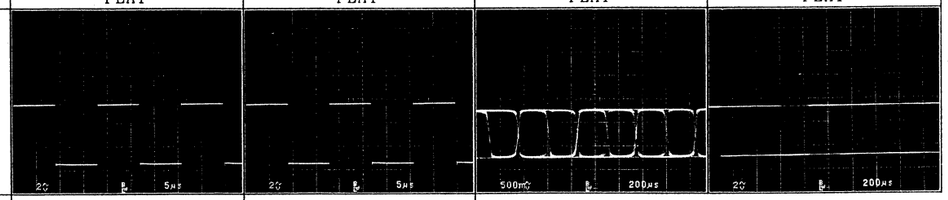			

TEST POINT	TP5	TP6
VOLTS/DIV.	2V	2V
SEC/DIV.	20usec	1msec
MODE	PLAY	PLAY
WAVEFORM	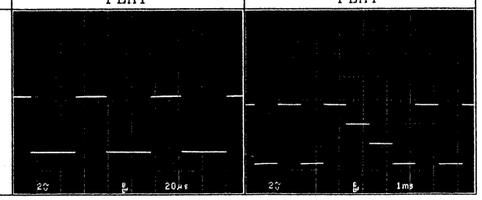	

These waveforms are taken by a scope in AC mode.

RA & HA WAVEFORMS FOR PAL

TEST POINT	TP1	TP2	TP3	TP4
VOLTS/DIV.	20mV	20mV	20mV	20mV
SEC/DIV.	5usec	5usec	5usec	5usec
MODE	PLAY	PLAY	PLAY	PLAY
WAVEFORM	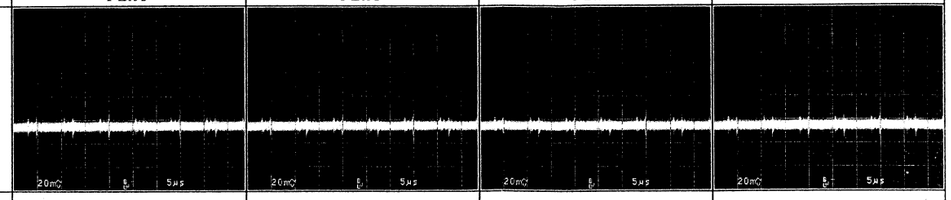			

TEST POINT	TP5	TP6	TP7	TP201
VOLTS/DIV.	20mV	20mV	20mV	20mV
SEC/DIV.	5usec	5usec	5usec	5usec
MODE	PLAY	PLAY	PLAY REC	PLAY REC
WAVEFORM	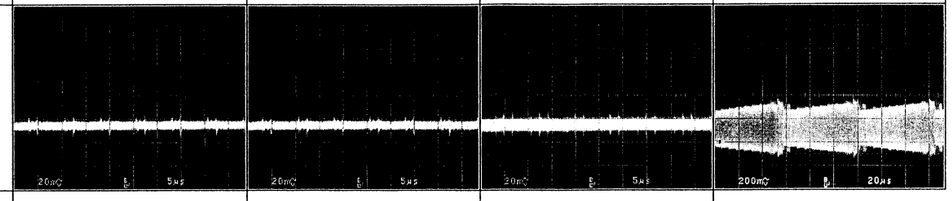			

TEST POINT	TP202	TP203	TP204
VOLTS/DIV.	200mV	200mV	200mV
SEC/DIV.	20usec	20usec	20usec
MODE	PLAY	PLAY	PLAY
WAVEFORM	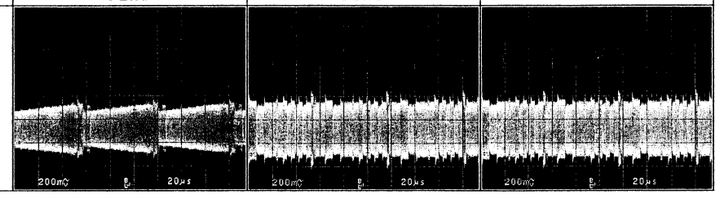		

These waveforms are taken by a scope in AC mode.

RA & HA WAVEFORMS FOR PAL

TEST POINT	TP1	TP2	TP3	TP4
VOLTS/DIV.	20mV	20mV	20mV	20mV
SEC/DIV.	5usec	5usec	5usec	5usec
MODE	PLAY	PLAY	PLAY	PLAY
WAVEFORM	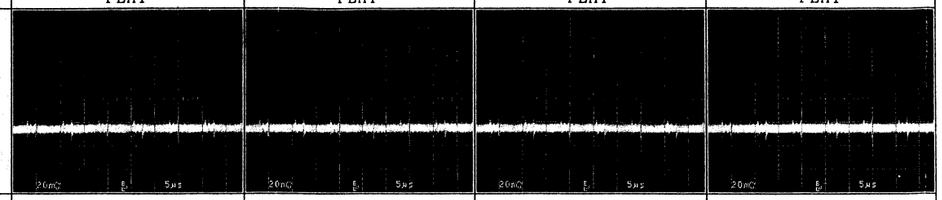			

TEST POINT	TP5	TP6	TP7	TP201
VOLTS/DIV.	20mV	20mV	20mV	20mV
SEC/DIV.	5usec	5usec	5usec	5usec
MODE	PLAY	PLAY	PLAY REC	PLAY REC
WAVEFORM	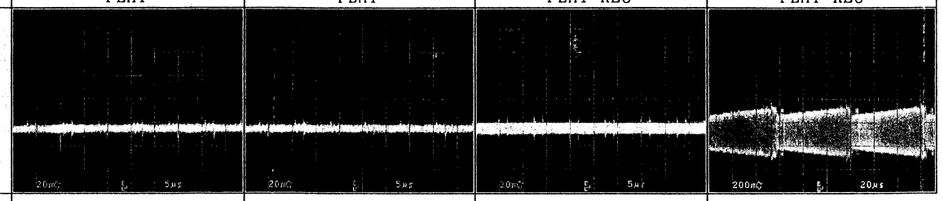			

TEST POINT	TP202	TP203	TP204
VOLTS/DIV.	200mV	200mV	200mV
SEC/DIV.	20usec	20usec	20usec
MODE	PLAY	PLAY	PLAY
WAVEFORM	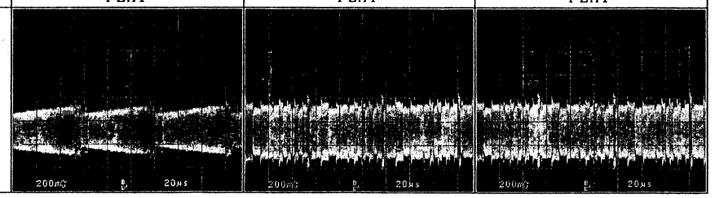		

These waveforms are taken by a scope in AC mode.